2013 PRODUCT CATALOG

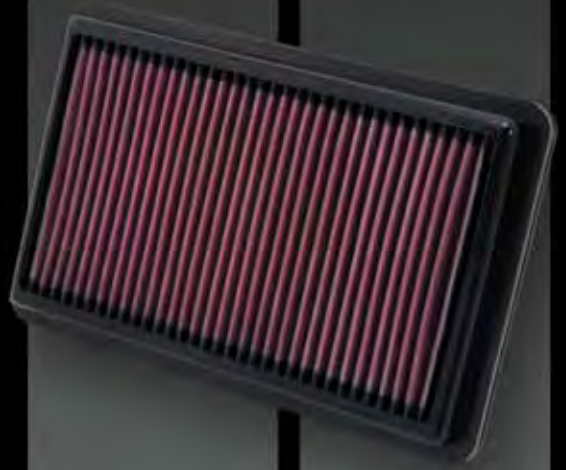

THE ORIGINAL PERFORMANCE AIR FILTER OF NASCAR

HIGH-FLOW AIR FILTERS

AIR INTAKE SYSTEMS

PERFORMANCE OIL FILTERS

HIGH-FLOW TECHNOLOGY

AIR FILTERS INTAKE SYSTEMS OIL FILTERS

AUTOMOTIVE

RACING

HEAVY DUTY DIESEL

POWERSPORTS

Photo: James Lissimore

Photo: BrianJNelson.com

Photo: Warn Industries

MOBILE AND AUXILIARY POWER EQUIPMENT

INDEX

K&N®

2013 PRODUCT CATALOG

SECTIONS **PAGES**

Air Filters, OE Replacements
- Benefits 2-3
- Applications 142-476
- Air Filter Cleaning Instructions & Assessories 480-481

Air Filters, Light Duty Turbo Diesel Truck 8

Air Filters, Motorcycle and ATV 9

Air Filters, Agricultural and Heavy Duty 10-11

Air Filters, Mobile & Auxiliary Power Equipment 12

Intake Systems
- Benefits 4-5
- Applications 80-141
- Spare Filters and Wraps 42-45

Oil Filters
- Benefits 6-7
- Applications 142-476

Oil Filters, Agricultural and Heavy Duty 11

Clamp-On Air Filters
- Benefits 14
- Listings by Size 46-65

Vent Filters and Breathers 16-17

Racing, Hot Rod, and Custom Products 18-33

Filter Dimensions by Size 66-79

Filter Wraps 36-45

Cleaning Products and Instructions 480-481

Air Filter Accessories 34-35

Warranties and Guarantees 477-479

PARTS FOR VEHICLES UPDATED DAILY AT
KNFILTERS.COM

The following are Trademarks and/or Registered trademarks of K&N Engineering, Inc.: K&N, the K&N Logo, HIGH-FLOW AIR FILTERS, WRENCH-OFF OIL FILTERS, AIRCHARGER, DRYCHARGER, FILTERCHARGER, FIPK, FIPK Generation 2, KNFILTERS.COM, KNPOWERSPORTS.COM, PERFORMANCE GOLD, POWERLINK, PRECHARGER, RECHARGER, STUBSTACK, TYPHOON, XSTREAM, the XSTREAM Logo, CUSTOM 66 SERIES, POWERLID, POWER KLEEN, 57i, WASHABLE & REUSABLE, the Hybrid Media logo, K&N MILLION MILE LIMITED WARRANTY, and the K&N Warranty medallions. K&N protects its marks and other legal rights against infringers.

5 MINUTE PERFORMANCE UPGRADE!

OE Replacement Air Filters

Never Replace Your Air Filter Again

- **Designed to Increase Horsepower and Acceleration**
- **Washable and Reusable**
- **K&N Million Mile Limited Warranty®**
  See page 477 for complete details
- **Drops into Your Factory Air Box in 5 Minutes**
- **Up to 50,000 Miles Between Cleanings***
  *Under normal highway driving conditions

Won't Void Vehicle Warranty

Designed to Increase Horsepower

This is the original High-Flow Air Filter™ invented by K&N. It is made with layers of woven cotton for a washable filter that offers high airflow that can increase your car's horsepower and acceleration. For better performance and value over the life of your car, you cannot go wrong with our most popular product.

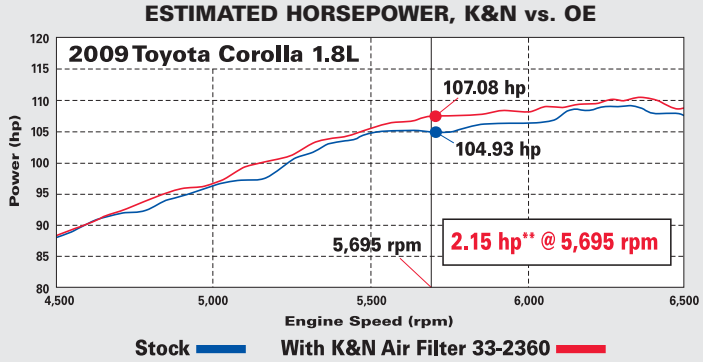

** Horsepower estimate is the result of one dynamometer test comparing horsepower at the wheels when changing from an OEM air filter to a K&N air filter for the vehicle listed. It is not meant to be representative of all our part numbers. Results will vary.

Save Money and Reduce Waste

One K&N OE Replacement Air Filter costs less than replacing disposable air filters over and over again. Washable air filters also help reduce the number of disposable air filters thrown into our landfills each year.

Thousands of microscopic cotton gauze fibers naturally hold specially designed oil in suspension to create a powerful filtering medium

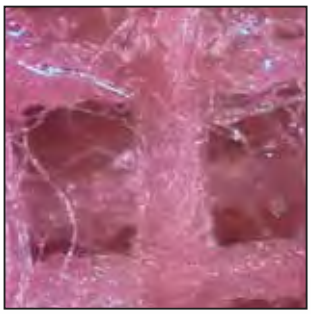

Cotton breathes easier increasing airflow to help your car run better.

Filter media is shown before K&N filter oil is applied.

5 MINUTE PERFORMANCE UPGRADE!

HANDMADE IN THE USA

OE Replacement Air Filters

Designed to Improve Engine Performance

Available for Most Cars and Trucks

Air Filter Testing

INVENTOR OF K&N AUTHENTIC PERFORMANCE PART SINCE 1969 HIGH-FLOW AIR FILTERS ™

We invented high-flow cotton air filters specifically to reduce air filter restriction while maintaining outstanding protection. We feel it is important to also be a leader in scientific testing of air filtration products in order to provide consumers with the best products available. With all of the air filter media testing we have performed we have yet to find any that provides a better balance of airflow, filtration efficiency, and capacity than our oiled cotton media air filters.

To help ensure we continue to deliver a quality product, we perform thousands of tests, including the following:

- Airflow and restriction test measurements
- Filtration efficiency in accordance with the ISO 5011 test protocol
- Vehicle horsepower testing on inertial dynamometers
- Vibration and heat cycling durability testing to simulate actual driving conditions

WASHABLE REUSABLE PERFORMANCE

AIRFLOW COMPARISON CHARTS†

These charts are examples of individual filters. Results will vary depending on part number and vehicle. Complete test protocol and results available at knfilters.com.

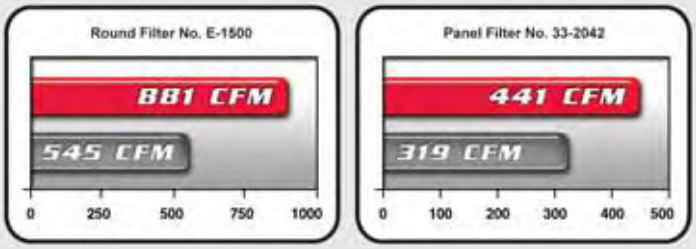

Average Disposable Aftermarket Air Filter

K&N Washable Reusable Air Filter

† Dust-free airflow tests performed on laboratory equipment. These tests measure airflow of clean air filters in cubic feet per minute (CFM) at 1 ½" of water pressure drop. Actual airflow rates will vary for these or other part numbers.

EASY TO INSTALL 5 MINUTES

Easy to Install – Usually No Tools Required

Step 1: Open the vehicle's air box.

Step 2: Remove the disposable filter.

Step 3: Place the K&N Washable/Reusable Air Filter into the air box.

Step 4: Close the air box and apply the "Do Not Discard" decal.

K&N OE replacement air filter #33-2342 installation shown on a 2011 Honda Civic 1.8L. Installation may vary for your vehicle.

THE ULTIMATE POWER UPGRADE!

Performance Air Intake Systems

Get up to Four Times More Horsepower Than From a K&N OE Replacement Air Filter Alone

- **Guaranteed to Increase Horsepower**
- **Washable and Reusable High-Flow Air Filter™**
- **Better Engine Sound**
- **Easy to Install in 90 Minutes or Less**
- **Oversized Air Filter Can Go Up to 100,000 Miles Between Cleanings****
  ** Under normal highway driving conditions
- **K&N Million Mile Limited Warranty®**
  See page 477 for complete details

Over 500 Systems Available

GUARANTEED TO INCREASE HORSEPOWER

We guarantee to the original retail purchaser that every K&N Intake System will provide a measurable increase in horsepower when installed on the vehicle for which it was designed. See more details at knfilters.com.

A Complete Air Delivery System

K&N Intake Systems completely replace the factory air intake assembly with an aerodynamically engineered tube and an oversized conical air filter. Most systems come with a heat shield that isolates the air filter element from the warm air generated by the engine. Cooler air results in better performance and power.

A typical installation can be done with a screwdriver, pliers and a ratchet set in 90 minutes or less! We specifically engineer our kits to use factory holes and mounting points, making installation simple. The vast majority of our kits do NOT require any cutting or drilling.

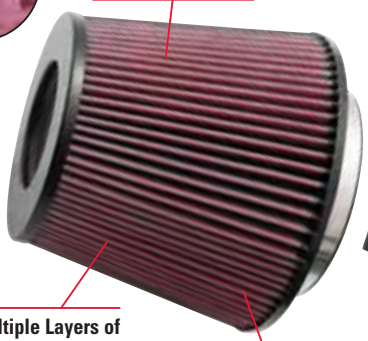

* Where applicable

Won't Void Vehicle Warranty

STREET LEGAL IN MOST STATES

SOME INTAKE SYSTEMS ARE NOT LEGAL FOR USE ON CERTAIN VEHICLES IN CALIFORNIA OR OTHER STATES ADOPTING CA EMISSION STANDARDS.

See knfilters.com for CARB status on each part for a specific vehicle

Look up the estimated horsepower gain available for your car on pages 80-141 or at knfilters.com

THE ULTIMATE POWER UPGRADE!

Performance Air Intake Systems

Guaranteed to Increase Horsepower

Better Sound and More Power You Can Feel

You'll smile at your car's new sound. A K&N intake system will make your car growl when under acceleration, yet stay quiet once at speed. You'll be thrilled when you feel the increased acceleration and horsepower. Plus you can feel confident knowing that your intake system is backed up by the best and largest aftermarket intake company in the World.

K&N Million Mile Limited Warranty

Each intake system we sell is tested for durability and power improvement. From vibration stands to dynamometers, to over the road testing, we put our intake systems through rigorous requirements so we can back them up with our Million Mile Limited Warranty.

Extend Your Cleaning Interval to 100,000 Miles

These intake systems come with oversized conical air filters that only require cleaning every 100,000 miles under normal highway driving conditions.

STREET LEGAL IN MOST STATES

SOME INTAKE SYSTEMS ARE NOT LEGAL FOR USE ON CERTAIN VEHICLES IN CALIFORNIA OR OTHER STATES ADOPTING CA EMISSION STANDARDS.

See knfilters.com for CARB status on each part for a specific vehicle

TUBES AND FINISHES

High Density Polyethylene (HDPE) Tubes

Some Part numbers starting with: 57, 63†

- Non-Metallic Rotationally Molded Tubes That Help Reduce Turbulence and Accelerate Airflow into the Engine for More Power

Aluminum Tubes

Part numbers starting with: 69, 77

- Free-Flowing, Mandrel-Bent Systems Built for Performance and Show and Available in an Assortment of Finishes

Carbon Fiber Tubes

Some part numbers starting with: 63†

- Lightweight, Attractive and Strong Composite Used in Some of Our Complete Air Delivery Systems

Part numbers start with: 57, 63

Some part numbers starting with: 63

Part numbers end with: TS, KS

Part numbers end with: TWR

Part numbers end with: KP, TP, P

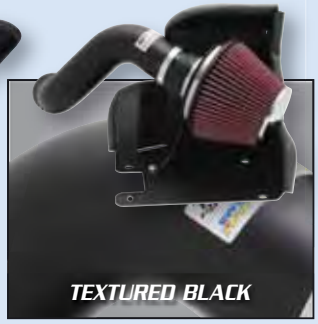

Part numbers end with: TTK, KTK, TFK, TWK

Part numbers end with: TR

Part numbers end with: TB

† Intake systems starting with 57 or 63 usually incorporate molded High Density Polyethylene Tubes.

HIGH-FLOW PERFORMANCE MADE EASY

Auto and Light Duty Truck Oil Filters

Our Premium Oil Filter

- **Filter Nut Makes Installation and Removal Quick and Easy**
- **Heavy Gauge Canister with Leakproof Double-Rolled Seams**
- **Designed for Higher Burst Strength and Protection from Road Debris**
- **Specially Designed for Today's Synthetic and Extended Service Motor Oils**

Premium Grade Wrench-Off® Oil Filters

We've all been there: whether it's remembering where that filter removal wrench is; having oil leak all over your garage and yourself; or finally giving up and pounding a screwdriver through the filter just to get it off. Most of our oil filters come with a nut welded to the top of the canister so they can be easily wrenched-off with a standard tool.

High-Flow Rate

Our oil filters use resin impregnated cellulose filter media. This allows for higher flow rates while providing outstanding filtration. High filter flow rates are important in racing vehicles where heavier grade oil is used and the oil is pumped much faster than in a standard vehicle. When the engine is circulating oil at high GPM rates, the high-flow oil filter helps reduce the loss of pressure through the filtering process.

Heavy Duty Construction for Extreme Conditions

To satisfy the demands of racers, our Premium Wrench-Off® Oil Filter has many features over and above the requirements of most vehicles. We use thicker canister walls for extra strength and durability which reduces the risk of damage from loose rocks and debris. The heavy duty construction will withstand higher oil pressures. The drilled hole in the nut is for a safety wire attachment. Required for many types of racing, the safety wire can prevent blown oil filters from falling on the track and presenting a hazard to other race vehicles. This extra engineering offers peace of mind for consumers who want only the best.

Find parts for vehicles on pages 142-476 or at knfilters.com

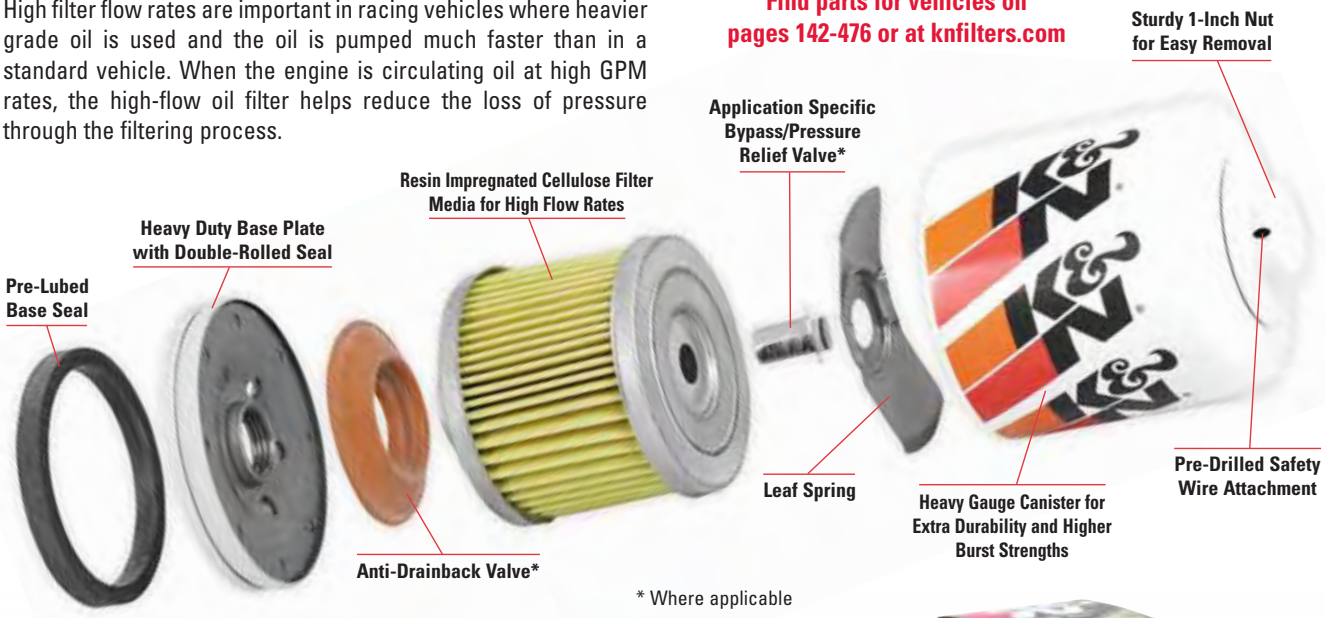

* Where applicable

Extended Life Makes Dollars and Sense

Many vehicle manufacturers are now recommending average oil change intervals of 10,000 miles or longer for newer vehicles using certain synthetic motor oils.** K&N Premium Wrench-Off® Oil Filters are the perfect partner for synthetic oils and extended oil change intervals. Extending your oil change intervals can save you time and serious money. Don't let an oil filter designed to last 3,000 miles be the weak link in the chain. K&N's Premium Wrench-Off® Oil Filters are built to go the distance.

** Always follow the factory recommended oil change intervals found in your vehicle owners manual.

Performance Oil Filters

Delivering Performance and Confidence

WASHABLE PERFORMANCE

The Last Oil Filter Your Car Will Need

- Never Needs To Be Replaced
- Cleans Easily with Soapy Water or in a Parts Washer
- Provides a Substantial Increase in Oil Flow When Compared To Standard Disposable Oil Filters
- K&N Million Mile Limited Warranty®
- Made in the USA with Premium Materials

HEAVY DUTY DIESEL

- Sturdy 1-Inch Nut for Easy Wrench-Off®
- High Dirt Holding Capacity and Filtration Efficiency
- Heavy Gauge Canister for Increased Burst and Pulsation Fatigue Strength
- Excellent Cold Flow Characteristics for Engine Protection During Cold Start-Up

WRENCH-OFF PERFORMANCE OIL FILTERS

PRO SERIES

For Professional Service Providers

Proud Sponsor of the NASCAR K&N PRO SERIES

- Designed for Better Engine Performance by Reducing Oil Filter Restriction
- Engineered to Handle All Grades of Synthetic and Conventional Motor Oils
- Pleated Filtration Media for Increased Capacity and Outstanding Filtration

POWERSPORTS

- 17mm Nut for Easy Wrench-Off®
- High-Flow Filtration Media Designed for Use with Today's Synthetic and Synthetic Blended Oils
- Heavy Duty Canister Construction for High Burst Strength

WRENCH-OFF PERFORMANCE OIL FILTERS

CARTRIDGE

- High-Flow, Pleated Filter Media Provides Increased Capacity and Outstanding Filtration
- Engineered to Handle All Grades of Synthetic and Conventional Motor Oils, Including Blends
- Available for Powersports or Automotive Applications

GIVE POWER AND PROTECTION A TRY

Light Duty Turbo Diesel Truck Filtration

50% More Filter Media for Improved Efficiency

K&N DIESEL

A K&N Makes a Difference

A diesel engine is a tough environment. Diesels create higher compression ratios and require tighter tolerances; that's why we build diesel air filters to even higher specifications. They typically use deeper pleats in larger sizes to increase surface area for more capacity and airflow. They contain more cotton in different grades and configurations to achieve higher levels of efficiency. When you put a K&N Diesel Air Filter to work, you can feel confident that you've got a product specially designed and tested for your diesel's specific engine demands.

High-Flow Diesel Air Filters

- Designed to Increase Horsepower
- Washable and Reusable
- 6 Layers of Extra Fine Weave Cotton
- Up to 50,000 Miles Between Cleanings**
- 50-State Street Legal

+10
Estimated Horsepower Gain*

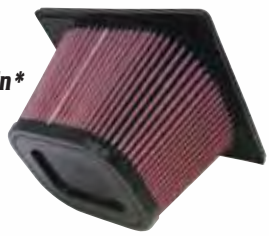

E-0776
2003-09 Dodge
Ram 2500/3500
5.9L Diesel

+5
Estimated Horsepower Gain*

E-0781
2006-10 Chevy
Silverado 2500HD/3500HD
6.6L Diesel

* Horsepower estimates are the result of one dynamometer test comparing horsepower at the wheels when changing from an OEM air filter to a K&N air filter for the vehicle listed. It is not meant to be representative of all our part numbers. Results will vary. For more information, look up vehicle and/or testing protocols at knfilters.com. ** Under normal highway driving conditions.

High-Flow Diesel Intake Systems

- Guaranteed Increase in Horsepower
- Better Engine Sound
- 6 Layers of Extra Fine Weave Cotton
- Up to 100,000 Miles Between Cleanings**

STREET LEGAL IN MOST STATES

SOME INTAKE SYSTEMS ARE NOT LEGAL FOR USE ON CERTAIN VEHICLES IN CALIFORNIA OR OTHER STATES ADOPTING CA EMISSION STANDARDS.

See knfilters.com for CARB status on each part for a specific vehicle

+16
Estimated Horsepower Gain†

57-2576
2008-10 Ford
F250/F350
6.4L Diesel

+20
Estimated Horsepower Gain†

57-3066
2007-10 Chevy
Silverado 2500HD/3500HD
6.6L Diesel

† Estimated horsepower gains based on specific or similar vehicle dynamometer tests. Results will vary. For more information, look up vehicle and/or testing protocols at knfilters.com. ** Under normal highway driving conditions

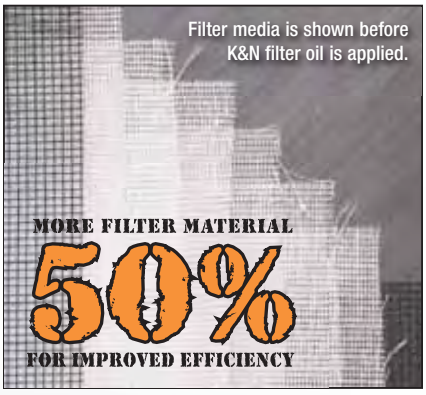

K&N High-Flow Diesel Air Filters are made with more layers of cotton filter media than our standard OE replacement air filters.

K&N POWERCUBE AIR FILTERS

Available for Dodge Ram trucks with K&N part numbers starting with "E-07"

K&N's line of POWERCUBE Air Filters are designed to replace an O/E flat panel filter with a 3-D oversized air filter that fits right into your factory air box. They fill otherwise empty space with a larger four-sided air filter and when it comes to air filters, bigger is always better – a lot better. The POWERCUBE has higher airflow and more dust holding capacity than even a K&N panel air filter.

Many More Specially Designed Diesel Air Filters and Intakes Available

UPGRADES FOR POWERSPORTS VEHICLES

K&N Motorcycle and ATV Air and Oil Filters

Providing Increased Performance, Long Life, and Ease of Maintenance

We have been manufacturing performance filters since the late 1960's. Designed to drop into your factory airbox, we offer over 400 stock replacement High-Flow Air Filters, including products for cruisers, sportbikes, and ATVs. We also produce specialty air filters and performance air intake systems* for select cruisers, ATVs and side by sides.

Outside of air filtration, we manufacture a premium oil filter built with synthetic media designed to be compatible with both synthetic and petroleum based oils. The special synthetic media is designed to withstand the high concentrates of synthetic racing oils while providing both high flow rates and outstanding filtration. K&N Oil Filters deliver performance and confidence!

Powersports Air and Oil Filters are listed in this catalog. For the complete Powersports line see **knfilters.com** or request a K&N Powersports catalog at **1-800-858-3333**.

Motorcycle and ATV air filters and oil filters are listed on pages 142-476

Photo: Warn Industries

EMISSIONS NOTICE FOR CALIFORNIA RESIDENTS: FOR RACING AND RED TAG OFF-ROAD VEHICLES ONLY. MAY NEVER BE USED ON A HIGHWAY

ATV/UTV

- Aircharger® Complete Intake Systems
- High-Flow Air Filters™
- Powerlids™
- Wrench-Off® Oil Filters

Photo: James Lissimore/Team Leading Edge Monster Energy

Dirt Bikes

- XStream® Series Motocross Filters
- High-Flow Air Filters™
- Performance Oil Filters

Sportbikes

- RACE-SPEC High-Flow Air Filters™
- Standard High-Flow Air Filters™
- Wrench-Off® Oil Filters

Photo: brianjnelson.com

American V-Twin

- Aircharger® Complete Intake Systems*
- Street Metal™ Intake Systems*
- RK Series Custom Air Cleaners*
- High-Flow Air Filters™
- Wrench-Off® Oil Filters

* STREET LEGAL IN MOST STATES

NOT LEGAL FOR USE IN CA & OTHER STATES ADOPTING CA EMISSIONS STANDARDS

CUSTOM ENGINEERED FOR CLASS 6-8 DIESEL TRUCKS

Commercial Grade Heavy Duty Truck Air Filters

Hybrid Filtration Media – No Oil Required

K&N DIESEL

▪ **Designed to Improve Horsepower** ▪ **Easy to Clean**

Heavy Duty

- Motorhomes and Recreational Vehicles
- Class 6-8 Trucks and Diesel Equipment
- Bus/Fire/Transport Vehicles
- Construction and Earth Moving Equipment

Commercial Grade Construction

HYBRID WASHABLE AIR FILTER

Our Diesel Air Filters are constructed with extra strength and reinforcements to withstand the harsh conditions that can be found in commercial use. The Hybrid filter medium is pleated and placed between two powder-coated aluminum screens for consistent surface area that can smooth and straighten airflow. The reinforced medium is then held between a top plate or molded urethane end cap and a molded urethane seal. These ends are molded to a powder-coated steel cage to help withstand the extreme temperatures and pressures that can be present in large turbo diesel applications. This means the filters will not collapse or lose their seal even under the high levels of compression that may be encountered in commercial environments.

A Washable Diesel Air Filter

The power, durability and design of turbo diesel engines create unique air filtration demands. K&N has developed a new line of Washable Heavy Duty Air Filters using our Hybrid filtration medium. These depth loading air filters deliver very high filtration efficiency, large dust holding capacity and high airflow, making them perfect for large turbo diesel class 6-8 over-the-road trucks, agriculture and earth moving equipment.

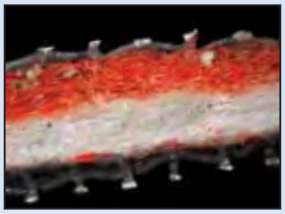

Our robust Hybrid Filtration Medium is comprised of lofted non-woven synthetic fibers to create a three-dimensional medium capable of providing high airflow and dirt capacity.

Designed To Improve Performance

Our Heavy Duty Diesel Air Filters are designed to improve performance and durability. When air filter restriction becomes too high, simply wash our filter and it's ready to go again for a total service life of up to 300,000 miles. They are incredibly easy to maintain and can be cleaned with power sprayers and pressure washers.

Spray on degreaser

Spray off dirt

Robust Construction – Easy To Clean

These filters are very robust, which means they are incredibly easy to clean and nearly indestructible. After you apply our special degreaser, part number 99-0638, you can use pressure washers, compressed air, or water hose nozzles to clean the dirt and grime out of the filter. The filter does not even have to be completely dry to be re-installed.

Commercial Grade Diesel Air Filter Warranty

These air filters are backed by a three-year/300,000-mile limited warranty. They are meant to be washed and reused over and over.

K&N 3 YEAR 300,000 MILE LIMITED WARRANTY COMMERCIAL GRADE DIESEL

BUILT TOUGH FOR DEMANDING CONDITIONS

Commercial Grade Heavy Duty Truck Air and Oil Filters

Call 1-877-AIR-FILTER to Select the Filter for Your Truck

Heavy Duty Air Filter Cross Reference

K&N	BALDWIN	CARQUEST	DONALDSON	FARR/RACOR	FLEETGUARD	FRAM	LUBER-FINER	NAPA	WIX
38-2001S/R*	PA2721	88891	P537447	062891001	AH1104 AH8501	CA7229	LAF1828	6891	46891
38-2002S/R*	PA2722	88893	P537448	062891002	AH1105 AH8503	CA7230	LAF1848	6893	46893
38-2006S*	PA3493	88748	P537454	114880003	AH1197	CA8130	LAF1934	6748	46748
38-2007S*	PA3556	88755	P537453	114500003	AH1193	CA6855	LAF2521	6755	46755
38-2008S*	PA2839	88623	P522874	•	AF25668	CA7113	LAF1839	6623	46623
38-2009R*	•	•	•	094973007	•	•	•	•	•
38-2011S*	RS3517	88744	P532966 EAF5105	•	AF25223 AF25667	CA8193	LAF4498	6744	46744
38-2012S*	RS3518	88556	P527682 EAF5069	•	AF4908 AF25139M	CA7140	LAF1849 LAF1849MXM	6556	46556
38-2013S*	RS3548	88664	P533930 EAF5109	•	AF25355 AF25354	CA8466	LAF3930	6664	46664
38-2014S*	PA3555	88759	P537452	114500002	AH1192	CA8129	LAF22026	6759	46759
38-2015R*	RS3539	88843	P534816 EAF5100	•	AF25247	CA8081	LAF4816	6843	46843
38-2018S*	RS3750	87455	P549644 EAF5107	•	AF25598	CA9009	LAF5873	2455	42455
38-2019S*	RS3530	88745	P533235 EAF5104	•	AF25033 AF25033M	CA7466	LAF1953 LAF1953MXM	6745	46745
38-2020S*	RS4859	88907	P614563	•	AF26667	CA9663	LAF2032	6907	46907
38-2021R*	RS3534	88863	P534925 EAF5101	•	AF25248	CA8231	LAF3302	6863	46863
38-2022S*	RS3516	88842	P534096 EAF5106	•	AF25219 AF26657	CA7727	LAF2536 LAF2536MXM	6842	46842
38-2023S*	RS4634	87808	EAF5114 P616691	•	AF26363	CA9869	LAF5114MXM	2808	42808
38-2024S*	RS3740	88772	P540388 EAF5098	•	AF25435	CA8598	LAF5722	6772	46772
38-2025S*	RS4642	83126	P606720 P605551	•	AF26163M AF26472M	CA9901	LAF9201	9126	49126
38-2026S*	RS4636	88870	P606503	•	AF25707	CA9346	LAF9099 LAF9097MXM	6870	46870
38-2027S*	RS4862	83088	P613336	•	AF26103	CA10305	LAF6663	9088	49088
38-2028S*	PA2456	87546	P181049 EAF5049	•	AF891 AF4090	•	LAF6453 LAF6453MXM	2546	42546
38-2029S*	PA2705	88883	P153551 EAF5053	•	AF1968M AF26328M	CA3990	LAF3551 LAF3551MXM	6883	46883
38-2030R*	PA2608 LL2608	88868	P181186 EAF5102	•	AF996M	CA6918	LAF2608	6868	46868
38-2031S*	RS2863	88433	P527484 EAF5067	•	AF4878	CA7139	LAF1878	6433	46433
38-2032S*	PA2680	88882	EAF5047 P150695	•	AF1969M	CA6512	LAF695	6882	46882
38-2033S*	PA3499	88904	P776157	•	AF25549	CA8003	LAF7472	6904	46904
38-2034R*	RS4572	87798	EAF5151 P544243	•	AF25955	CA9758	LAF6243	2798	42798
38-2035S*	RS5434	88932	P543614 P828633	•	AF27693	CA9856	LAF5633	6932	46932
38-2037R*	LL2317 PA2317	87961	EAF5008 P181008	•	AF852M	CA595	LAF6918D	2961	42961
38-2038R*	PA2357	87661	P181009	•	AF865M	CA596	LAF6880	2661	42661

*S = standard flow. R = reverse flow. Some air filters are available in both variations. Cross references should be used for comparison of filters with similar dimensions. The user assumes all responsibility for verifying that filters are compatible with their vehicle before using these products. Damage may result if the user fails to ensure that the filter is compatible and seals properly before installing the product or operating the engine. Please call K&N's Customer Service Department at 1-877-AIR-FILTER for assistance when choosing the appropriate replacement air filter.

Heavy Duty Wrench-Off® Oil Filter Cross Reference

K&N	BALDWIN	CARQUEST	DONALDSON	FLEETGUARD	FRAM	LUBER-FINER	NAPA	WIX
HP-8000	B495 B495-MPG B495-SS	85971 85971XD	P552100 ELF3998 LF9620	LF3620 LF3671	PH7405A PH7405	LFP2160 LFP2160XL	1971 1971XD	51971 51971XD
HP-8001	B76 B76-MPG B76-SS B7600 B7600-SS	85791 85791XD 85791XE	P553191 P554004 ELF7483 ELF7739	LF667 LF3379 LF9667	PH8842 PH49A HPH49A	LFP3191 LFP3191SC LFP3191XL	1791 1791XD 1791XE	51791 51791XD 51791XE
HP-8002	B99 B99-MPG B99-SS	85792 85792XD 85792XE	P554005 P554105 ELF7405	LF691 LF691A LF3374 LF3566 LF9691 LF9691A	PH3335 HPH3335 PH3426	LFP4005 LFP4005RN LFP4005SC LFP4005XL	1792P 1792XD 1792XE	51792 51792XD 51792XE 51801
HP-8003	BD103 BD103-SS	85748 85748XD	P553000 ELF7300	LF3000 LF3639 LF9009	PH6349A HPH6349A HPH6349	LFP3000 LFP3000XL	1748 1748XD	51748 51748XD
HP-8006	BD7154	84745XD 84746XD	P559000 ELF7900	LF9031 LF9080	• •	LFP9001	7745XD 7746XD	57745XD 57746XD
HP-8017	BT427	85602	P558616 ELF7345	LF3345	PH3900	LFP3900	1602	51602
HP-8021	BT237	85459	P554407	LF699 LF787	PH977A	LFP2292	1459	51459
HP-8025	BD7250	84744XD	P550656 P552025	LF9025	PH9971 PH9971A	LFP9025	7744XD	57744XD
HP-8026	P7235	84311	P550528	LF16166	CH9549	LP2017	7311	57311
HP-8027	P7188	84215	P550761	LF3914	CH9260	LP8741	7215	57215
HP-8028	P7230	84213	P550769 ELF7690	LF16046	CH9558	LP5048	7213	57213
HP-8034	B958 BT839-10	85196 85551 85552 85553	P173710 P551195 P551551 P551553 P779656 P779657 P779658 P779669	HF6056 HF6057 HF6058 HF6121 HF6505 HF6510 HF7608	P1653A P3509 P3760 P7037	LFP1652	1196 1551 1552 1553	51196 51551 51552 51553
HP-8035	BD7317 BT7349	84620 R84620 84620XE	P558615 ELF7349	LF3349 LF3552 LF3806 LF3894 LF3972 LF9028 LF16035	PH3976A HPH3976A	LFP780 LFP780XL	7620 7620XE	57607 57620 57620XE

Cross references should be used for comparison of filters with similar dimensions. The user assumes all responsibility for verifying that filters are compatible with their vehicle before using these products. Damage may result if the user fails to ensure that the filter is compatible and seals properly before installing the product or operating the engine. Please call K&N's Customer Service Department at 1-877-AIR-FILTER for assistance when choosing the appropriate replacement oil filter.

MOBILE AND AUXILIARY POWER EQUIPMENT AIR FILTERS

Washable and Reusable Air Filters for Generators, Landscape Equipment, Refrigeration Units and More

K&N offers air filters for many types of mobile and auxiliary power equipment using our new Hybrid Air Filtration Medium. These filters are made from a non-woven synthetic material designed to be used dry with no oil required. This makes these air filters very easy to clean using power washers, pressure sprayers or hose nozzles. Our Hybrid filter has a lofted three-dimensional feature which adds depth loading and large dust holding capacities.

Mobile and Auxiliary Power Equipment Air Filter Cross Reference

K&N	ORIGINAL EQUIPMENT #	BALDWIN	CARQUEST	DONALDSON	FLEETGUARD	FRAM	LUBER-FINER	NAPA	WIX
33-2238	Briggs & Stratton: 399959 Briggs & Stratton: 491588 Honda: 17211ZL8003	PA2222	87420	P606276	•	•	LAF4512	2420	42420
33-2240	Briggs & Stratton: 499486	•	•	•	•	•	•	•	•
33-2301	Honda: 17210ZJ1842	•	•	•	•	•	•	•	•
33-2303	Kawasaki: 110137002	•	•	•	•	•	•	•	•
33-2307	Kawasaki: 110137017	•	•	•	•	•	•	•	•
E-1650	Impco: F19	PA1758	87095	•	AF390	•	AF212	2095	42095
E-2470	Case: A70090 International Harvester: 385168R1 Kohler: 235116 Tecumseh: 32008 Worthington: FLR225	PA678	87373	P528231	AF843	CA77	AF213	2373	42373
E-3740	Impco: F16	•	•	•	•	•	•	•	•
E-4142	Briggs & Stratton: 392308	PA4556	87292	•	•	CA8442	AF205	2292	42292
E-4142	Briggs & Stratton: 396424	PA2225	87424	•	•	CA8442	•	2424	42424
E-4310	Stihl: 42011410300	PA2862	87977	P530645	AF4525	•	LAF8820	2977	42977
E-4400	Jacobsen: 231847 (Kohler) John Deere: AM30800 Kohler: 231847 Lauson: 10060 Tecumseh: 31925	PA1712	87374	P528206	AF1651	CA76	AF211	2374	42374
E-4425	Onan: 1401228	PA2063	88094	P530642	AF1669	CA140	LAF1782	6094	46094
E-4430	Tecumseh: 32355 Volvo: 660846	PA1639	87305	•	AF1648	CA72	AF208	2305	42305
E-4450	Ingersoll Rand: 3H36330T75	•	•	•	•	•	•	•	•
E-4490	Ingersoll Rand: 668788 Thermo-King: FA70PL	PA640	87370	P526873	AF284	CA70	AF70	2370	42370
E-4505	Honda: 17210890505	•	•	•	•	•	•	•	•
E-4511	Honda: 17211ZE7W03	•	•	•	•	•	•	•	•
E-4513	Honda: 17210ZE2505	PA4552	87709	P607273	AF25473	•	LAF5024	2709	42709
E-4515	Honda: 17210ZE0505	PA4551	87322	•	AF25471	•	LAF22024	2322	42322
E-4516	Honda: 17210ZE1517 Honda: 17210ZE1822	PA4820	•	•	•	•	LAF22025		•
E-4517	Briggs & Stratton: 390930 Briggs & Stratton: 393957 John Deere: PT9334	PA2223	87291	P606290	AF4574	•	AF206	2291	42291
E-4518	Kohler: 2408303	PA3901	87444	P607255	•	CA8507	LAF5802	2444	42444
E-4521	John Deere: M47494 Kohler: 4708303	PA2069	87297	P530639	AF25340	CA79	AF217	2297	42297
E-4522	Kohler: 4708301 Kohler: 4708304	PA2068	87296	P530635	•	CA6605	AF216	2296	42296
E-4552	Onan: 140-3071	RS3715	88449	P822686	AF25538	CA9248	LAF8388	6449	46449
E-4583	Kohler: 4508302	PA2067	87299	P528215	•	CA372	AF215	2299	42299
E-4600	Ingersoll Rand: 9079099	•	•	•	•	•	•	•	•
E-4610	Ingersoll Rand: 9080099	•	•	•	•	•	•	•	•
E-4640	Impco: F15	PA2050	88033	•	AF4929	•	•	6033	46033
E-4650	Impco: F115	PA2102	88247	•	AF4928	CA6525	•	6247	46247
E-4665	Briggs & Stratton: 392642 Briggs & Stratton: 394018	PA2226	87359	P530628	•	CA7726	LAF1918	2359	42359
E-4680	Ingersoll Rand: 2969K99	•	•	•	•	•	•	•	•
E-4710	Craftsman: 917816000	•	•	•	•	•	•	•	•
E-4720	Ingersoll Rand: RU406X59	•	•	•	•	•	•	•	•
E-4780	Impco: F114	PA638	87232	•	•	•	•	2232	42232
E-4790	Impco: F11	PA615	•	•	•	•	•	•	•
E-4900	Tecumseh: 33268	PA2258	87361	•	•	CA8561	•	2361	42361
E-4961	•	RS3704	88438	P821575	AF25551	CA9550	LAF8195	6438	46438
E-4962	•	RS3988	88489	P822768	AF25308	CA9246	LAF8143	6489	46489

Cross references should be used for comparison of filters with similar dimensions. The user assumes all responsibility for verifying that filters are compatible with their vehicle before using these products. Damage may result if the user fails to ensure that the filter is compatible and seals properly before installing the product or operating the engine. Please call K&N's Customer Service Department at 1-800-858-3333 for assistance when choosing the appropriate replacement air filter.

The Original Performance Air Filter of NASCAR®

Dedicated to NASCAR® Racing

K&N traces its involvement with NASCAR back to the 1970s, the early days of supplying parts for the NASCAR Sprint Cup Series™ races at the old Riverside Speedway. And our dedication to racing is strengthened each time we develop our products at racetracks, and support race teams at all levels of NASCAR competition.

From NASCAR® to Your Car

Now you can use the same air filter technology used in NASCAR to improve the performance of your car. K&N's High Flow Air Filters™ are specially designed to reduce airflow restriction and improve horsepower by using layers of cotton instead of paper media. Cotton breathes easier and is washable. One K&N High Flow Replacement Air Filter can last for the life of your car and only needs to be cleaned every 50,000 miles under normal driving conditions. Better performance and longer life from K&N, the original performance air filter of NASCAR.

As the title sponsor of the NASCAR K&N Pro Series East and West, K&N is once again helping to support developing drivers. This mirrors our 25 year commitment to grass-roots racing and local event sponsorship. This is the premier developmental series created by NASCAR to help drivers learn the skills they will need to be able to compete at the national event level. So if you want all the thrills and chills of NASCAR in a smaller setting, go check out a NASCAR K&N Pro Series™ race at one of the tracks near you.

NASCAR® is a registered trademark of the National Association for Stock Car Auto Racing, Inc.

2013 NASCAR K&N PRO SERIES SCHEDULE

Pro Series West		Pro Series East	
Mar 2	Phoenix	Mar 16	Bristol
May 4	Stockton	Mar 23	Greenville
May 25	Brainerd	Apr 13	Five Flags
Jun 7	Iowa	Apr 25	Richmond
Jun 9	Lebanon	Jun 1	Bowman Gray
Jun 22	Sonoma	Jun 7	Iowa
Jul 27	Colorado	Jun 22	Langley
Aug 2	Iowa	Jul 13	Columbus
Aug 17	Evergreen	Jul 20	Raceway Park
Aug 24	Spokane	Aug 2	Iowa
Sep 14	Miller	Sep 2	Greenville
Sep 28	Albuquerque	Sep 21	New Hampshire
Oct 12	Roseville	Sep 27	Dover
Oct 26	Kern County	Oct 18	Road Atlanta
Nov 9	Phoenix	Nov 2	Rockingham

CLAMP-ON AIR FILTERS

Clamp-On Air Filter Specifications

K&N Universal Air Filters are designed and manufactured for a wide variety of applications. Regardless of the angle, offset, or diameter of the air intake, there is probably a K&N Universal Air Filter available for your equipment. All filters are constructed with ultra-strong molded pliable rubber flanges which absorb vibration and allow for secure attachment, and can also be stretched up to 1/16″ (1.5 mm) to fit in-between sizes. K&N Universal Air Filters are available in round, tapered and oval designs, for just about any special application.

OVER 800 SIZES AVAILABLE

See pages 46-65 for complete dimensions

POPULAR SPECIALTY AIR FILTERS

ROUND TAPERED	FLANGE ID	HEIGHT
RU-4960	2 3/4″	5 1/2″
RE-0930	3″	6″
RE-0870	4″	9″
RU-2800	5″	7″
RF-1041	6″	7 1/2″

ROUND STRAIGHT	FLANGE ID	HEIGHT
RU-0210	1 11/16″	5″
RU-0800	2 7/16″	4″
RB-0910	3″	5″
RU-2820	3″	6 1/2″

OVAL TAPERED	FLANGE ID	HEIGHT
RU-2780	2 7/16″	2 3/4″
RC-5040	3 1/2″	5 1/2″
RF-1040	4″	7 1/2″
RC-5102	4″	8 15/16″

OVAL STRAIGHT	FLANGE ID	HEIGHT
RU-1820	2″	2 3/4″
RU-1390	2 7/16″	7″
RA-0770	2 9/16″	3″
RU-3620	3 1/2″	7″

Composite

With advanced composite technology, carbon fiber provides incredible strength with minimal weight. Carbon fiber provides 1/3 less weight than a conventional filter top. Smooth, glass like appearance provides the ultimate in finish, fit, and function.

RF-1047

FLANGE DIAMETER INCH	FLANGE DIAMETER MM	BASE OUTSIDE DIAMETER INCH	BASE OUTSIDE DIAMETER MM	TOP OUTSIDE DIAMETER INCH	TOP OUTSIDE DIAMETER MM	FLANGE HEIGHT INCH	FLANGE HEIGHT MM	LENGTH INCH	LENGTH MM	DESCRIPTION	AIR FILTER #	NOTE	FILTER WRAP PART #
1 15/16	49	3	76	3	76	3	76	5/8	16	Round Straight	RP-5164		22-8008PK
1 15/16	49	3	76	3	76	4	102	5/8	16	Round Straight	RP-5119		22-8009PK
3	76	6	152	5	127	6	152	1	25	Round Tapered	RP-5044		•
3	76	6	152	5	127	6	152	1 3/4	44	Round Tapered	RF-1047		25-3900
3 3/8	86	6	152	4 1/2	114	9	229	1/2	13	Round Tapered	RP-5118		RC-3690DK
3 1/2	89	5 1/2	140	4 1/2	114	6 1/2	165	1 1/4	32	Round Tapered	RP-4630		RC-4630DK
3 1/2	89	12 x 6	305 x 152	9 15/16 x 3 15/16	252 x 100	6	152	15/16	24	Oval Tapered	RF-1038	1	•
3 7/8	98	12 x 6	305 x 152	9 15/16 x 3 15/16	253 x 100	6	152	15/16	24	Oval Tapered	RP-5070	1	•
3 7/8	98	12 x 6	305 x 152	9 15/16 x 3 15/16	254 x 100	6	152	15/16	24	Oval Tapered	RP-5115		•
3 7/8	98	12 x 6	305 x 152	9 15/16 x 3 15/16	255 x 100	7	178	15/16	24	Oval Tapered	RP-5103		RP-5103DK
4	102	5 3/8	137	4	102	5 1/16	129	5/8	16	Round Tapered	RP-4930		RP-4660DK
4	102	5 3/8	137	4	102	5 1/2	140	5/8	16	Round Tapered	RP-4660		RP-4660DK
4	102	5 3/8	137	4	102	6 1/2	165	5/8	16	Round Tapered	RP-4980		RC-5149DK
4	102	5 3/8	137	4	102	7	178	5/8	16	Round Tapered	RP-4970		22-8032PK
4 1/8	105	18 3/4 x 5	476 x 127	16 3/4 x 3	425 x 76	4 13/16	122	2	51	Oval Tapered	RP-5135		RP-5135DK
4 1/4	108	5 7/8	149	4 1/2	114	6 3/4	171	5/8	16	Round Tapered	RP-5167		RF-1037DK
4 1/2	114	5 7/8	149	4	102	6	152	5/8	16	Round Tapered	RP-5101		RU-5168DK
4 1/2	114	5 7/8	149	4 1/2	114	6	152	5/8	16	Round Tapered	RP-4740		RF-1023DK
5	127	6 1/2	165	4 1/2	114	5 5/8	143	1	25	Round Tapered	RP-5113		RU-5147DK
6	152	7 1/2	191	4 1/2	114	4	102	1	25	Round Tapered	RP-4600		22-8036PK
8 3/4 in x 3 1/4	222 x 83	18 3/4 x 5	476 x 127	16 3/4 x 3	425 x 76	4 13/16	122	2	51	Oval Tapered	RP-5161		RP-5135DK

Inverted

This unique approach to filter design and concept utilizes a filtering top that actually inverts, dropping into the cylinder of the filter! Surface area is greatly increased and designed to provide more filtration than other comparably sized products.

FLANGE INSIDE DIAMETER INCH	FLANGE INSIDE DIAMETER MM	BASE OUTSIDE DIAMETER INCH	BASE OUTSIDE DIAMETER MM	TOP OUTSIDE DIAMETER INCH	TOP OUTSIDE DIAMETER MM	HEIGHT INCH	HEIGHT MM	FLANGE LENGTH INCH	FLANGE LENGTH MM	DESCRIPTION	COLOR	AIR FILTER #
2 3/4	70	5 7/8	149	5 1/4	133	5	127	3/4	19	Round Tapered	Red	RR-2801
2 3/4	70	5 7/8	149	5 1/4	133	5	127	3/4	19	Round Tapered	Blue	RR-2802
2 3/4	70	5 7/8	149	5 1/4	133	5	127	3/4	19	Round Tapered	Polished	RR-2803
3	76	6	152	5 1/4	133	5	127	1 3/4	44	Round Tapered	Red	RR-3001
3	76	6	152	5 1/4	133	5	127	1 3/4	44	Round Tapered	Blue	RR-3002
3	76	6	152	5 1/4	133	5	127	1 3/4	44	Round Tapered	Polished	RR-3003
4, 3 1/2, 3	102/89/76	6	152	4 3/4	121	5 1/2	140	1 1/8	29	Adjustable Flange	Chrome/Blue	RG-1001BL
4, 3 1/2, 3	102/89/76	6	152	4 3/4	121	5 1/2	140	1 1/8	29	Adjustable Flange	Chrome/Red	RG-1001RD
4, 3 1/2, 3	102/89/76	6	152	4 3/4	121	5 1/2	140	1 1/8	29	Adjustable Flange	Chrome/White	RG-1001WT
4, 3 1/2, 3	102/89/76	6	152	4 3/4	121	9 1/2	241	1 1/8	29	Adjustable Flange	Chrome/Red	RG-1002RD

Titanium

When it comes to exotic race materials, titanium is well known for its lightweight and increased strength to weight ratio. Offering lighter weights than conventional filter tops and more rigidity, K&N titanium top filters are the next generation in filter design.

RT-4590

FLANGE INSIDE DIAMETER INCH	FLANGE INSIDE DIAMETER MM	BASE OUTSIDE DIAMETER INCH	BASE OUTSIDE DIAMETER MM	TOP OUTSIDE DIAMETER INCH	TOP OUTSIDE DIAMETER MM	HEIGHT INCH	HEIGHT MM	FLANGE LENGTH INCH	FLANGE LENGTH MM	DESCRIPTION	AIR FILTER #	FILTER WRAP PART #
4 1/2	114	5 7/8	149	4 1/2	114	5	127	5/8	16	Round Tapered	RT-4610	25-3900
6	152	7 1/2	191	4 1/2	114	4	102	1	25	Round Tapered	RT-4600	22-8036PK
6	152	7 1/2	191	4 1/2	114	5	127	1	25	Round Tapered	RT-4590	22-8049DK

Footnotes: 1) Filter top has a 1 1/8 inch vent hole.

VENT FILTERS AND BREATHERS

The NASCAR K&N Pro Series™

As the title sponsor of the NASCAR K&N Pro-Series East and West, K&N is once again helping to support developing drivers. This mirrors our 25 year commitment to grass-roots racing and local event sponsorship. This is the premier developmental series created by NASCAR to help drivers learn the skills they will need to be able to compete at the national event level. So if you want all the thrills and chills of NASCAR in a smaller setting, go check out a NASCAR K&N Pro-Series™ Race at one of the tracks near you.

Proud Sponsor of the

Steel Base Crankcase Vent Filters

One Piece Design For Competition Use

Steel base crankcase vent filters have vent tubes added to their base. Filters consist of a one piece design with a rubber or chrome top. Filters with mounting studs can be mounted remotely, but require vent hoses and clamps. Filters mounted direct can be pressed into rubber grommets in valve covers. All baseplates are chrome plated and tubes are zinc.

VENT DIAMETER	2″ O.D.; 1 1/2″ H RUBBER TOP	3″ O.D.; 2″ H RUBBER TOP	2″ O.D.; 1 1/2″ H CHROME TOP W/STUD	3″ O.D.; 2″ H CHROME TOP	3″ O.D.; 2 1/2″ H CHROME TOP
3/8″ O.D.	62-1000	•	62-1090	•	•
1/2″ O.D.	62-1010	62-1050	62-1100	62-1140	•
1/2″ O.D.	62-1015[2]	•	•	•	•
1/2″ O.D.	62-1250[1]	•	62-1300[1]	•	
5/8″ O.D.	62-1020	62-1060	62-1110	62-1150	•
3/4″ O.D.	62-1030	62-1070	62-1120	62-1160	•
1″ O.D.	62-1040	62-1080	62-1130	62-1170	62-1590WT[3]

Notes: 1) Special 3″ H Filter; 2) 2″ Chrome Top.; 3) White media. Includes 1 1/4″ grommet.

STEEL BASE/CHROME TOP

Rubber Base Crankcase Vent Filters

Designed to clamp directly to metal or plastic tubing. Ideal for engines, transmissions, oil and gas tanks on racing vehicles.

FLANGE I.D.	FILTER O.D.	FILTER HEIGHT	RUBBER TOP	CHROME TOP	CUSTOM TOP
5/16″	1 3/8″	1 1/8″	•	62-2470	•
3/8″	2″	1 1/2″	•	62-1320	62-1570
3/8″ or 1/2″	2″	1 3/4″	•	62-1600[1]	•
1/2″	2″	1 1/2″	•	62-1330	•
9/16″	1 3/8″	1 1/8″	•	62-2480	•
5/8″	2″	1 1/2″	•	62-1340	•
3/4″	1 3/8″	1 1/8″	62-1560	•	•
3/4″	2″	1 1/2″	•	62-1360	•
3/4″	2″	2 1/2″	RU-3630	•	•
1″	2″	1 1/2″	•	62-1370	•
1″	3″	2 1/4″	62-1410	62-1420	•
1 1/4″	3″	2 1/2″	62-1380	62-1390	62-1580
1 3/8″	3″	2 1/2″	62-1430	62-1440	•
1 1/2″	3″	2 1/2″	62-1450	62-1460	•
1 3/4″	3″	2 1/2″	62-1470	62-1480	•

Notes: 1) Available in three colors. Add BL to end for blue, RD for red, or WT for white.

RUBBER BASE/RUBBER TOP

RUBBER BASE//CHROME TOP

Rubber Mounting Flange Covered Air Filters

Designed for round intake flanges. Easy to install. Rubber flange design grips securely. The flange can be stretched to fit in between sizes. Aluminum cover is anodized for durability.

FLANGE I.D.	BONNET O.D.	ELEMENT SIZE	AIR FILTER ONLY	ASSEMBLY#
1″	4″	3 1/2″ OD x 3 1/2″ H	RE-0200	54-1010
1 1/4″	4″	3 1/2″ OD x 3 1/2″ H	RE-0220	54-1020
1 1/2″	4″	3 1/2″ OD x 3 1/2″ H	RE-0240	54-1030
1 3/4″	4″	3 1/2″ OD x 3 1/2″ H	RE-0260	54-1040
2″	4″	3 1/2″ OD x 3 1/2″ H	RE-0280	54-1050
2 1/2″	5″	5″ OD x 2 3/4″ H	RE-0380	54-1110

54-1010

Assembled

These filters are legal ONLY for racing vehicles. Not applicable, nor intended for use on emission controlled street or highway vehicles, or for use on aircraft.

CAUTION: The use of these atmosphere vented breather systems are not recommended for computer controlled vehicles, as it will result in erratic operation and may damage an engine.

Crankcase Vent Filters With and Without Deflector Shield

Universal mounting, for a wide variety of valve covers. All shields and top plates are chrome-plated for beauty and durability.

62-1516

62-1514

62-1519

85-1222

62-1495

85-1220

Style 1

Universal "Push-In" filter for all valve covers. Note: Not recommended to be used as an oil filter plug, as repeated removal will damage the filter.

VENT FILTER SIZE	PART#
3″OD; 2 1/2″H; 1 1/4″ hole, w/shield	62-1516
3″OD; 2 1/2″H; 1 1/4″ hole, w/o shield	62-1490
2″OD; 2 1/4″H; 1 1/4″ hole, w/o shield	62-1485
1 1/8″ FLG-OD, 9/16″ FLG ID, 2″OD, 2 1/8″H	62-1230

Style 2

Universal "Clamp-On" for valve covers with existing vent tubes. All filters are 3″ O.D. with deflector shields and 2 1/2″ tall.

VENT FLANGE DIAMETER	PART#
1″ I.D.	62-1511
1 1/4″ I.D.	62-1512
1 3/8″ I.D.	62-1513
1 1/2″ I.D.	62-1514
1 3/4″ I.D.	62-1515

Style 3

Zinc plated steel base plate with attached vent tube. Designed to push in to existing rubber breather grommets. All filters are 3″ O.D. with deflector shields and 2 1/2″ tall.

GROMMET SIZE	PART#
1/2″ I.D.	62-1517
5/8″ I.D.	62-1518
3/4″ I.D.	62-1519
1″ I.D.	62-1520

Style 4

Nylon reinforced adapter plus a 3″ O.D. x 2 1/2″ tall filter, with or without deflector shield. 3″ tall universal mount, requires a 1 1/4″ I.D. hole, and a 2″ square, flat surface. Comes complete with mounting hardware.

DESCRIPTION	PART#
Without deflector shield	85-1221
With deflector shield	85-1222

Ford Screw in Breather

This filter is designed to screw directly into threaded Ford valve covers with 1 1/4-7 thread pitch. Filter dimensions: 3″ O.D. Chrome top 1 3/4″ height. Flange dimension: 1 1/4″ O.D., 3/4″ L.

DESCRIPTION	PART#
Ford screw in breather	62-1495

Nylon Reinforced 3″ Tall Valve Cover Adapters

Requires a 1 1/2″ I.D. flanged filter (purchased separately).

DESCRIPTION	PART#
Screws into Ford valve covers	85-1200
Screws into late GM valve covers	85-1210
Universal mount (see style 4)	85-1220

Tower Base Covered Crankcase Vent Filter with Multi-Hose Vents

Designed for VW and other like-size engines needing maximum crankcase breathing filtration. Saves blow-by oil while relieving crankcase pressure. K&N Air Filter stops dirt from reaching oil supply. Bottom fitting should connect to engine's lowest pressure point (such as a rocker cover). Top side fitting should connect to engine's highest pressure point (such as the crankcase).

Cast Aluminum Tower: Universal mount, internal oil baffles, three 3/8″ NPT outlets for braided hose fittings.
Chromed Steel Tower: No inner baffles. Adjustable steel mounting bracket and three 1/2″ vent tubes for use with rubber slip-on hose.

62-1400

TOWER STYLE	TOWER DIMENSIONS	NUMBER OF OUTLETS	COVER DIAMETER & HEIGHT	ELEMENT DIAMETER & HEIGHT	REPLACEMENT ELEMENT PART#	COMPLETE ASSEMBLY PART#
Cast Aluminum	2 1/8″D x 4 3/4″H	3 - 3/8″ NPT	4″OD x 3 1/2″H	3 1/2″ x 3 1/2″	RE-0280	62-1400
Chromed Steel	2″D x 4″H	3 - 1/2″ hose	4″OD x 3 1/2″H	3 1/2″ x 3 1/2″	RE-0280	62-1210

Flat Base Covered Crankcase Vent Filters Remote Mount

Remote mount allows use of 1/2″ or 3/8″ ID vent hoses. Comes with satin anodized aluminum cover 4″ in diameter and 3 1/2″ high. Air Filter is removable for easy servicing. Includes universal type mounting bracket for bolt-on or weld-on.

NUMBER OF OUTLETS	COVER DIAMETER & HEIGHT	ELEMENT DIAMETER & HEIGHT	REPLACEMENT ELEMENT PART#	COMPLETE ASSEMBLY PART#
2 - 1/2″ hose	4″OD x 3 1/2″H	3 1/2″ x 3 1/2″	E-3050	62-1180
3 - 1/2″ hose	4″OD x 3 1/2″H	3 1/2″ x 3 1/2″	E-3050	62-1190
3 - 3/8″ hose	4″OD x 3 1/2″H	3 1/2″ x 3 1/2″	E-3050	62-1200

These filters are legal ONLY for racing vehicles. Not applicable, nor intended for use on emission controlled street or highway vehicles, or for use on aircraft.
CAUTION: The use of these atmosphere vented breather systems are not recommended for computer controlled vehicles, as it will result in erratic operation and may damage an engine.

Flow Control Air Filter Kits

The Flow Control Air Filter Kit utilizes a custom designed base in combination with a unique lid, featuring a tongue or protrusion, that is designed to reduce intake turbulence. The resulting smooth, laminar flow, enhances cylinder filling, horsepower, and torque. The filter element is the world famous K&N High-Flow Air Filter™ for the ultimate in airflow and filtration. This powerful combination is designed to increase horsepower. **Unless specifically noted, these will NOT fit "HP" series carburetors.**

FLOW CONTROL DIMENSIONS

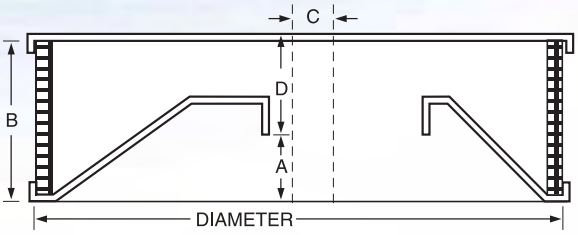

PART#	DIAMETER	DROP "A"	ELE. HT. "B"	OFF SET "C"	HT. ABOVE CARB FLG. "D"
61-2000	14″	.343	4.0	1.0	3.75
61-2010	14″	.343	4.5	1.0	4.25
61-2020	14″	1.37	4.0	1.0	2.75
61-2030	14″	1.37	4.5	1.0	3.25
61-2040	14″	.625	4.5	0	4.18
61-4000	14″	.125	4.0	0	4.25
61-4010	14″	.125	4.5	0	4.75
61-4020	14″	.156	4.0	0	4.37
61-4030	14″	.156	4.5	0	4.87
61-4040	14″	.437	4.0	0	4.00
61-4050	14″	.437	4.5	0	4.50
61-6000	14″	.500	4.5	0	4.62
61-4500	16″	1.93	3.5	0	2.12
61-4520	16″	1.93	4.0	0	2.62

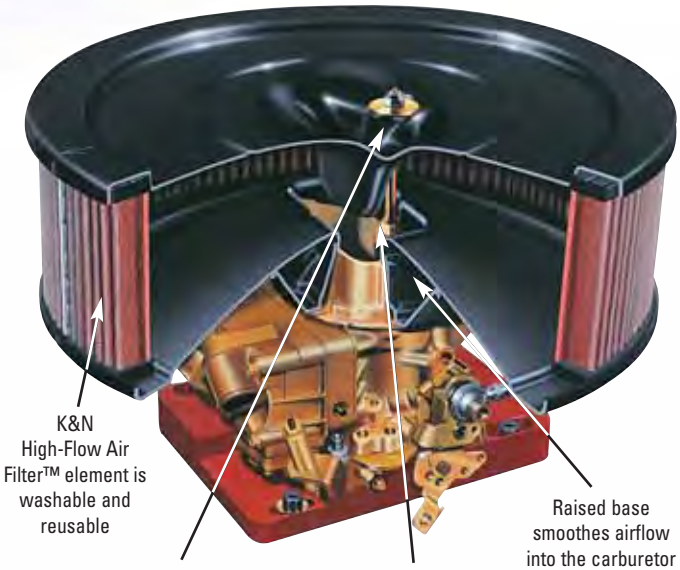

Carburetor not included.

Replacement Filter Elements

Hundreds of sizes available. See pages 67-79.

DIMENSIONS	PART#	DIMENSIONS	PART#
14″ x 2.5″	E-3735	14″ x 5″	E-3760[1]
14″ x 3″	E-3737	14″ x 6″	E-3770[1]
14″ x 3.5″	E-3745[1]	16″ x 3.5″	E-3804
14″ x 4″	E-3730	16″ x 4″	E-3806
14″ x 4.5″	E-3732	16″ x 4.5″	E-3808

1) Inner Support Wire

Flow Control Filter Clips

Filter Clips are designed for added support around the outside of the complete air filter kit. Made of spring steel and black powder coated, these clips come in sets of four and are available for the Flow Control Air filter kits listed.

Comes in sets of four.

FOR 14" ASSY	PART#
14" x 4.0"	85-83890
14" x 4.5"	85-83892
FOR 16" ASSY	
16" x 3.5"	85-83894
16" x 4.0"	85-83896

Deflector Shields for Flow Control Air Filter Kits

Designed to control heat and help direct airflow.

DESCRIPTION	PART#
14″ x 4.0″ Deflector Shield	85-54400
14″ x 4.5″ Deflector Shield	85-54450
16″ x 3.5″ Deflector Shield	85-56351
16″ x 4.0″ Deflector Shield	85-56401

85-54400

Flow Control Air filter kit not included.

These filters are legal ONLY for racing vehicles. Not applicable, nor intended for use on emission controlled street or highway vehicles. These filters are not applicable, nor intended for use on aircraft. **UNLESS SPECIFICALLY NOTED, THESE WILL NOT FIT "HP" SERIES CARB.**

Flow Control: 4-Barrel Holley® Dominator

Designed for all Holley® HP Dominator carburetors. This Flow Control Air Filter Kit takes full advantage of the 360º air delivery system by using K&N's 4 1/2″ Air Filter. This air filter kit is designed to produce a whopping 1200 cfm at 1 1/2 inches of water pressure drop which should be more than enough air for any motorsports application!

DESCRIPTION	SIZE	PART#
Fits Holley Dominator and HP Series Carbs	14″ x 4.5″	**61-6000**

61-6000

XStream® Flow Control Air Filter Kits

DESCRIPTION	FLANGE	COLOR	PART#
Flow Control for 4BI Holley®	No Choke	Black	**66-3200**
Flow Control for 4BI Holley®	w/ Choke	Black	**66-3210**
Flow Control for Holley® Dominator	All	Black	**66-3220**

Flow Control: 4-Barrel Holley®

With and Without Choke Tower

The inspiration for this particular air cleaner was the 390 cfm Holley®. Many tracks and racing organizations use this carburetor as a restrictor. Flows plenty on the 390 and you can pass it all the way up to the mighty 850 and it keeps on making horsepower. Available in two sizes. Comes complete with all necessary parts.

WITH CHOKE TOWER: For unmodified choke towers.

DESCRIPTION	14″ x 4.0″	14″ x 4.5″
With choke tower, Fits 390-800	**61-4020**	**61-4030**
With choke tower, Fits 830-850	**61-4040**	**61-4050**

WITHOUT CHOKE TOWER:

DESCRIPTION	14″ x 4.0″	14″ x 4.5″
Without choke tower	**61-4000**	**61-4010**

Flow Control: 4-Barrel Holley® Low Profile Without Choke Tower

This air cleaner is designed for installations with the carburetor mounted high against the hood. An engine requiring 700 cfm or more to develop a certain level of power will not work with hood clearance that will only allow 450 cfm. There are race cars with less than 1/2″ between the hood and the vent tubes of the carb. This model of Flow Control is as low as is recommended to assure maximum airflow. It was necessary to enlarge the diameter to 16″ to maintain airflow. Fits 390-850 Holley.

DESCRIPTION	16″ x 3.5″	16″ x 4.0″
Low Profile w/o Choke Tower	**61-4500**	**61-4520**

Note: This model only works without the choke tower and works great with restrictor plate engines. If you're working with these engines, call K&N's customer service and get all the info. Available in two sizes. Comes with all necessary parts.

Flow Control:

2-Barrel Rochester

DESCRIPTION	SIZE	PART#
Flow Control Air Filter Kit	14″ x 4.5″	**61-2040**

The choice of quite a few racing associations, this carburetor is used in an attempt to equalize competition. If you have to use this carburetor, you should use this air cleaner. Clears the HEI distributor on the cast iron manifold. Only one size offered because only one size works.

Flow Control: 2-Barrel Holley®

With and Without Choke Tower

Fits the very popular 4412 Holley® 2-barrel by removing the choke assembly and leaving the choke tower untouched. The result is an increase in airflow. Two sizes available.

WITH CHOKE TOWER: For unmodified choke towers.

DESCRIPTION	14″ x 4.0″	14″ x 4.5″
With choke tower	**61-2000**	**61-2010**

WITHOUT CHOKE TOWER:

DESCRIPTION	14″ x 4.0″	14″ x 4.5″
Without choke tower	**61-2020**	**61-2030**

These filters are legal ONLY for racing vehicles. Not applicable, nor intended for use on emission controlled street or highway vehicles. These filters are not applicable, nor intended for use on aircraft. **UNLESS SPECIFICALLY NOTED, THESE WILL NOT FIT "HP" SERIES CARB.**

RX-3770

XStream® Air Filters Designed For Serious Racers

XStream® Air Filters take performance to the next level with innovative K&N airflow technology. They provide awesome airflow and outstanding filtration. In any form of racing, racers need all the protection and airflow they can get. Two styles of XStream Air Filters are available: standard tapered or reverse tapered (top is larger diameter).

FLANGE INSIDE DIAMETER INCH	FLANGE INSIDE DIAMETER MM	BASE OUTSIDE DIAMETER INCH	BASE OUTSIDE DIAMETER MM	TOP OUTSIDE DIAMETER INCH	TOP OUTSIDE DIAMETER MM	HEIGHT INCH	HEIGHT MM	FLANGE LENGTH INCH	FLANGE LENGTH MM	FLANGE TYPE	DESCRIPTION	AIR FILTER #	NOTE	FILTER WRAP PART #
2 13/32	61	4 23/32	120	3 31/32	101	3 3/4	95	3 11/32	85	Centered	Round Tapered	**RX-5179**		•
2 7/16	62	4	102	4	102	4 3/4	121	3/4	19	Centered	Round Straight	**RX-4040-1**	1	•
2 7/16	62	4 1/2	114	4	102	6 1/8	156	3	76	Angled - 20°	Round Tapered	**RX-3800**		**RX-3820PK**
2 7/16	62	4 1/2	114	6	152	6 1/8	156	3	76	Angled - 20°	Reverse Tapered	**RX-3770**	1	**RX-3810DK**
2 7/16	62	4 1/2	114	6	152	6 1/8	156	7/8	22	Centered	Reverse Tapered	**RX-3810XD**	2	**RX-3810DK**
2 1/2	64	4 1/2	114	4	102	3 13/16	97	3/4	19	Centered	Round Tapered	**RX-4010**		•
2 1/2	64	6	152	5	127	5 1/2	140	2	51	Centered	Round Tapered	**RX-4950**	1	**RX-4990DK**
2 1/2	64	6	152	5	127	6 1/2	165	2	51	Centered	Round Tapered	**RX-4860**	1	**RX-4730DK**
2 3/4	70	6	152	5	127	5 1/2	140	2	51	Centered	Round Tapered	**RX-4960**	1	**RX-4990DK**
2 3/4	70	6	152	5	127	6 1/2	165	2	51	Centered	Round Tapered	**RX-4870**		**RX-4730DK**
2 7/8	73	4 1/4	108	4	102	4 3/4	121	15/16	24	Centered	Round Tapered	**RX-4020-1**	1	•
3	76	4 1/2	114	6	152	4 5/8	117	7/8	22	Centered	Reverse Tapered	**RX-3900-1**	1	•
3	76	5	127	5	127	7	178	5/8	16	Centered	Round Straight	**RX-2820**	1, 3	**22-8044PK**
3	76	6	152	4	102	8 11/16	221	15/16	24	Centered	Round Tapered	**RX-3990-1**	1	•
3	76	6	152	5	127	5 9/16	141	1 7/8	48	Centered	Round Tapered	**RX-4990**	1	**RX-4990DK**
3	76	6	152	5	127	6 1/2	165	1 7/8	48	Centered	Round Tapered	**RX-4730**	1	**RX-4730DK**
3	76	6	152	5	127	6 1/2	165	1 7/8	48	Centered	Round Tapered	**RX-4730XD**	2	**RX-4730DK**
3	76	8 x 6	203 x 152	5	127	6 1/2	165	1 7/8	48	Centered	Oval Tapered	**RX-4750**	1	**RF-1042DK**
3 1/2	89	4	102	4	101.6	5 3/4	146	3/4	19	Centered	Round Straight	**RX-4140**		**RU-1470PK**
3 13/16	97	6 13/16	173	6	152	2 1/8	54	3/4	19	Centered	Round Tapered	**RX-4130-1**	1	•

Footnotes: 1) Filter has molded-in velocity stack. 2) Extreme duty off-road filter. 3) Open style top.

XStream® Air-Flow Tops

K&N XStream® Air Flow Tops are innovative round filters designed to replace a metal air filter top. These filter lids add more filter area and are designed to increase horsepower and dirt capacity. XStream® top adds approximately 1″ to total height of assembly.

16″ AIR-FLOW TOP
66-1601

Assemblies come with black ring top. Blue, red, and polished tops sold separately.

Other colors vailable in 14″ size only.

14″ ASSEMBLY
66-3060

- **Increases High-Flow Filter Area**
- **Washable and Reusable**
- **Wide Range of Sizes and Applications**

XStream® Air-Flow Top Only

DESCRIPTION	DIA.	FLANGE	HEIGHT	PART#	COLOR
Top Only	9″	N/A	N/A	**66-0901**	Black
Top Only	11″	N/A	N/A	**66-1101**	Black
Top Only	14″	N/A	N/A	**66-1401**	Black
Top Only	14″	N/A	N/A	**66-1401XB**	Blue
Top Only	14″	N/A	N/A	**66-1401XP**	Polished
Top Only	14″	N/A	N/A	**66-1401XR**	Red
Top Only	16″	N/A	N/A	**66-1601**	Black

11″ Assemblies

NECK FLANGE	ELEMENT HEIGHT	ELEMENT PART#	COMPLETE ASSEMBLY	TOTAL HEIGHT**	COLOR
5 1/8″	2 3/16″	**E-1200**	**66-3110**	3 1/2″	Black
5 1/8″	3 1/2″	**E-1250**	**66-3120**	4 3/4″	Black
5 1/8″	5″	**E-3680**	**66-3130**	6 1/4″	Black
7 5/16″	3 1/2″	**E-1250**	**66-3140**	4 1/2″	Black

9″ Assemblies

NECK FLANGE	ELEMENT HEIGHT	ELEMENT PART#	COMPLETE ASSEMBLY	TOTAL HEIGHT**	COLOR
5 1/8″	2 7/8″	**E-3530**	**66-3150**	4 1/2″	Black
5 1/8″	2 7/8″	**E-3530**	**66-3160**	8 1/4″*	Black

14″ Assemblies

NECK FLANGE	ELEMENT HEIGHT	ELEMENT PART#	COMPLETE ASSEMBLY	TOTAL HEIGHT**	COLOR
STANDARD 9/16″ RAISED BASE					
5 1/8″	2 5/16″	**E-3740**	**66-3000**	3 7/8″	Black
5 1/8″	3″	**E-1650**	**66-3010**	4 5/8″	Black
5 1/8″	4″	**E-3750**	**66-3020**	5 7/8″	Black
5 1/8″	5″	**E-3760**	**66-3030**	6 7/8″	Black
1 1/4″ DROP BASE					
5 1/8″	3″	**E-1650**	**66-3040**	2 3/4″	Black
5 1/8″	4″	**E-3750**	**66-3060**	3 3/4″	Black
5 1/8″	5″	**E-3760**	**66-3070**	4 3/4″	Black
7/8″ DROP BASE					
5 1/8″	3″	**E-1650**	**66-3050**	3 1/8″	Black
DOMINATOR					
7 5/16″	4″	**E-3750**	**66-3080**	5 1/2″	Black
7 5/16″	5″	**E-3760**	**66-3090**	6 1/2″	Black
7 5/16″	6″	**E-3770**	**66-3100**	7 1/2″	Black

Footnotes: * Velocity stack. ** Total Height= minimum clearance required above carburetor flange.

Individual Round Style Stacks

"Early Type" Fuel Injectors (Single Stacks) for Chevrolet, etc.

Filters designed to fit with cut velocity stacks, or straight pieces of exhaust tubing. Rubber filter bases come with molded in velocity stack type radius and step, for smooth bore down from element to tube. Each filter has a rubber top with a K&N logo.

AIR FILTER MOUNTING FLANGE INSIDE DIA.	INJECTOR BORE SIZE INSIDE DIA.	AIR FILTER DIA. X LENGTH IN INCHES	STRAIGHT NECK MOUNTING FLANGE PART#	5° ANGLE NECK MOUNTING FLANGE PART#
1 7/8″ (47.5mm)	1 13/16″ (46mm)	3 1/2 x 4	**RD-0450**	N/A
		3 1/2 x 5	**RD-0460**	N/A
		3 1/2 x 6	**RD-0470**	N/A
2 1/8″ (54mm)	2 1/16″ (52.5mm)	3 1/2 x 4	**RD-0500**	**RB-0500**
		3 1/2 x 5	**RD-0510**	**RB-0510**
		3 1/2 x 6	**RD-0520**	**RB-0520**
2 1/4″ (57mm)	2 3/16″ (55.5mm)	3 1/2 x 4	**RD-0600**	**RB-0600**
		3 1/2 x 5	**RD-0610**	**RB-0610**
		3 1/2 x 6	**RD-0620**	**RB-0620**
2 1/2″ (63.5mm)	2 7/16″ (62mm)	3 1/2 x 4	**RD-0700**	**RB-0700**
		3 1/2 x 5	**RD-0710**	**RB-0710**
		3 1/2 x 6	**RD-0720**	**RB-0720**
2 5/8″ (66.5mm)	2 9/16″ (65mm)	4 x 4	N/A	**RB-0800**
		4 x 5	N/A	**RB-0810**
3″ (76mm)	2 15/16″ (74.5mm)	4 1/2 x 4	N/A	**RB-0900**
		4 1/2 x 5	N/A	**RB-0910**

RD-0620

Each filter sold individually.

Go to page 481 for air filter cleaning accessories

Kinsler Non-Siamesed Fuel Injector Stacks

Round filters fit uncut ram tube bells and clamp securely to the lip. Will fit any injection setup that has a minimum of 4 1/4″ center to center, and parallel ram tubes. Each filter has a rubber top with a stamped K&N logo.

RAM TUBE	FILTER SIZE	INJECTOR MODEL#	PART# SINGLE
3 7/8″	4 1/4″ B, 4″ T, 6″ H	N/A	**RD-6000**
3 5/8″	4″ B, 3 3/4″ T, 6″ H	"351-F-8"	**RD-6010**
3 7/8″	4 1/4″ B, 3 1/2″ T, 4 1/4″ H	N/A	**RD-6020**

RD-6000

Each filter sold individually.

Hilborn 4, Injectors Fitted to Honda & Kawasaki Engines in T.Q. Midgets

Air filters designed to fit over stock, uncut ram tubes. Filters come complete with rubber mounting adapters. To install, fit rubber adapters around ram tube bases and fit filters over ram tubes and clamp onto adapters in desired position. Air filters come with chrome end caps. Fits #45-K-4A and #45-H-4B Hilborn injectors and are packaged in sets of four. Filters measure 3″ O.D. x 6″L and fit 1 1/2″ Ram Tubes.
Part# RD-1004

Hilborn Injectors for Blowers & Turbos

Air filters designed to fit over stock, uncut ram tube. Filter comes complete with rubber mounting adapter. To install, fit rubber adapter around ram tube base. On early screw-on ram tube type, cut adapter with razor blade and wrap around tube. Fit filter over ram tube and clamp onto adapter in desired position. Air filters come with chrome end caps.

DESCRIPTION	PART#
Hilborn Injector #525, for Magnuson Super Chargers. Used on American V-Twin and V.W. blown engines. Filter fits 2 1/8″ ram tube. Measures 6″ dia. top, 5 1/2″ dia. base, 6″ long	**RD-1100**
Hilborn Injector #523, for 60 c.i. Magnuson Blower Head. Filter fits 2 1/2″ ram tube. Measures 7″ dia. top, 7″ dia. base, 6″ long	**RD-1200**
Hilborn Injector #524, for 80 c.i. Magnuson Blower Head. Filter fits 3" ram tube. Measures 7″ dia., 6" long	**RD-1300**
Hilborn Injector #F414A, for Turbocharged tractor, air filter clamps over 4″ lip on cast ram tube. Air filter measures 7″ dia., 6″ long	**RD-1400**[1]
Hilborn Injector #F414A, for Turbocharged tractor, air filter clamps over 4″ lip on cast ram tube. Air filter measures 7″ dia., 8″ long	**RD-1410**[1]

Footnote: 1) Rubber mounting adapter not required. Filter mounts directly to injector.

RD-1400

These filters are legal ONLY for racing vehicles. Not applicable, nor intended for use on emission controlled street or highway vehicles.
These filters are not applicable, nor intended for use on aircraft.

Dual Oval Style Stacks

"Late Type" Hilborn Siamese Stacks

Filters are designed to be used with stock, uncut, siamesed ram tubes. Comes with removable aluminum top plate.To install, push Ram Tubes through rubber base and clamp at desired height. Oval top plate measures 9˝L x 5 1/2˝W, total height is 6 3/4˝.

INJECTOR TUBE OUTSIDE DIAMETER	INJECTOR INSIDE DIAMETER	INJECTOR MODEL#	CENTER TO CENTER MEASUREMENT OF BORES	PART#
2 1/8˝ (54mm)	2 1/16˝ (52.5mm)	"R"	2.44˝	**RD-4200**
2 1/4˝ (57mm)	2 3/16˝ (55.5mm)	"Q"	2.44˝	**RD-4400**
2 1/2˝ (63.5mm)	2 7/16˝ (62mm)	"P"	2.70˝	**RD-4600****
2 5/8˝ (66.5mm)	2 1/2˝ (63.5mm)	"327-C-84"	2.70˝	**RD-4650**
2 3/4˝ (70mm)	2 5/8˝ (66.5mm)	"327-C-8"	2.87˝	**RD-4669*****
3˝ (76mm)	2 15/16˝ (74.5mm)	"F"	3.20˝	**RD-4800**
3 1/8˝ (79.4mm)	3˝ (76mm)	"396-C-8M"	3.20˝	**RD-4850**

Adapter kit needed to convert air cleaner when equipped with 2 1/4˝ restrictor stacks (Part# 85-4600**, kit includes 8 adapters).
***Packaged four per box. When ordering singles specify **Part# RD-4660** right side or **Part# RD-4670** left side.

RD-4600*

Kinsler-Siamese Stacks

Air filters are designed for use with the Kinsler fuel injection system for Pontiac and Chevrolet small block V8. Air filters come with removable top plate, to install, push injector tubes through rubber base and clamp at desired height. Oval top plate is 9˝L x 5 1/2˝W. Total height of air filter is 6 3/4˝.

INJECTOR TUBE OUTSIDE DIAMETER	INJECTOR INSIDE DIAMETER	INJECTOR MODEL#	CENTER TO CENTER MEASUREMENT OF BORES	PART#
2 3/8˝ (58mm)	2 1/4˝ (57mm)	N/A	2.80˝	**RD-5000**
2 9/16˝ (65mm)	2 7/16˝ (62mm)	N/A	2.80˝	**RD-5010**
2 5/8˝ (66.5mm)	2 1/2˝ (63.5mm)	N/A	2.80˝	**RD-5020**

RD-5020*

"Late Type" Hilborn and Other Injectors for VW Air-Cooled Engines

Air filters designed to fit over stock, uncut ram tubes. Comes with removable aluminum top plate. To install, push ram tubes through rubber base and clamp at desired height. Oval top plate measures 9˝L x 5 1/2˝W, total height is 6 3/4˝.

AIR CLEANER MOUNTING FLANGE INSIDE DIAMETER	INJECTOR BORE SIZE INSIDE DIAMETER	HILBORN MODEL#	CENTER TO CENTER MEASUREMENT OF BORES	PART#
1 3/4˝ (44.5mm)	1 11/16˝ (43mm)	#1600 V-4	3.312˝	**RD-3400**
1 7/8˝ (48mm)	1 13/16˝ (46mm)	31600 V-4B	3.312˝	**RD-3500**
2 1/8˝ (54mm)	2 1/16˝ (52.5mm)	#2000 V-4	3.375˝	**RD-3600**
1 3/4˝ (44.5mm)	1 11/16˝ (43mm)	ARPM Rotary F/I	2.700˝	**RD-4900**

RD-3400*

"Early Type" Hilborn and Other Injectors for VW Air-Cooled Engines

Air filters designed to fit over stock, uncut ram tubes. Fits early type tubes with right angle mounting flange, held on with four screws. Cleaners come complete with rubber mounting adapters. To install, cut adapter with a razor blade and wrap around ram tube. Drop one-piece filter over ram tubes and clamp onto adapters in desired position. Oval top plate measures 9˝L x 5 1/2˝W, total filter height is 6 3/4˝.

AIR CLEANER MOUNTING FLANGE INSIDE DIAMETER	INJECTOR BORE SIZE INSIDE DIAMETER	HILBORN MODEL#	CENTER TO CENTER MEASUREMENT OF BORES	PART#
1 3/4˝ (44.5mm)	1 11/16˝ (43mm)	(Early) 1600 V-4	3.312˝	**RD-3200**

*Each filter sold individually. These filters are legal ONLY for racing vehicles. Not applicable, nor intended for use on emission controlled street or highway vehicles. These filters are not applicable, nor intended for use on aircraft.

100-8580

Carbon Fiber Injected Stack Filter

Lightweight, yet durable, K&N's Carbon Fiber Injector Stack Filter is a must for any racer currently using traditional multi-Siamese stacks. Constructed from ultra-light weight carbon fiber. A Carbon Fiber Injector Stack Filter provides ample airflow for your racing needs. The base does not have any holes cut through, so it can fit most any stack configuration. Once the base has been put in place, simply slip the main filter assembly over the stacks. Supplied spring clip clamps keep the filter securely together for positive seal and ease of servicing. Extra large box. 27 3/16″L x 16 1/8″W x 6″ H. **Part# 100-8580**

Carbon Fiber Airbox

If maximum airflow is what you are looking for, a carbon fiber airbox is your ticket. This allows you to do away with clamping a filter on to each individual ram tube. Once the base has been put in place, simply slip the main filter assembly over the stacks. This airbox will allow your vehicle's engine to breathe all the clean air it needs to make you a winner. As with all K&N filters, this is a washable and reusable air filter. Simply use our K&N oil and cleaner to service your filter.

APPLICATIONS	PART#
Small Carbon Fiber Box with filter top, no holes in base, fits two injectors**	100-8569*
Medium Carbon Fiber Box with filter top, no holes in base, fits four injectors**	100-8570*
Medium Carbon Fiber Box Base, no holes	100-8573
Medium Carbon Fiber Box Solid Base, no holes	100-8577
Medium Box with top/sides only, 19″ x 6″	100-8575
Medium Box with top/sides only; 19″ x 7″	100-8578
Medium Box 4″ Tall with hardware	100-8576
Gen 2 Sprint Car Air Box with 2.50″ air horn seals**	100-8558*
Gen 2 Sprint Car Air Box with 2.75″ air horn seals**	100-8559*
Large Base, Hilborn rotary injection base, with hardware	100-8574
Large Carbon Fiber Box with filter top 6 3/4″ center spread**	100-8562*
Large Carbon Fiber Box with carbon top 6 3/4″ center spread**	100-8563*
Large Side Filter with filter top only**	100-8564
Large Base Plate Only, holes are not pre-cut	100-8565
Large Side Filter with carbon top only**	100-8566
Large Carbon Fiber Box with filter top, no holes in base	100-8567*
Large Carbon Fiber Box with filter top, no holes in base**	100-8592*
Large Carbon Fiber Box with filter top 7″ center spread**	100-8568*
Large Base Plate Only with 4 1/2″ c-c, holes	100-8571
Large Base Plate Only 12 5/8″ x 17 3/4″, no rubber or holes	100-8590
Large Box 4″ Tall with hardware	100-8591

*Complete units, base plate, side filter and top
**Side filter is glued to top on all units

088040
2.5″ Air Horn Seal

100-8558
Complete Sprint Car Air Box with Air Horn Seals

100-8570

100-8562

AIR HORN SEALS

SIZE	PART#
2.5″	088040
2.75″	088056

PRECHARGERS®

BOX SIZE	BLACK	RED	BLUE	YELLOW
Small	100-8569PK	100-8569PR	•	100-8569PY
Medium	100-8570PK	100-8570PR	•	100-8570PY
Large	100-8562PK	100-8562PR	100-8562PL	100-8562PY

Racing Cone Filters

Designed for Formula Atlantic and Super Vee style cars, these filters fit into the air scoops and allow plenty of fresh clean air to enter the engine, but keep racetrack debris from demolishing the engine. A hole at the small end of the filter allows debris to exit the air scoop. Designed for the vehicles listed below, but can probably be adapted to a wide variety of applications.

APPLICATION	A	B	C	PART#
Lola Sports 2000	5 7/8″	2″	10″	**28-4100**
Vestal Racing Cars	5 7/8″	2″	8″	**28-4105**
Tiga Sport 2000	5 1/2″	2″	16″	**28-4115**
83-85 Tiga Sport 2000	6 1/8″	3″	16″	**28-4120**
Ralt Formula Atlantic, Super Vee	4 7/8″	2″	16″	**28-4125**
Swift Sport 2000	5 3/4″	2″	16″	**28-4130**
Extension for **28-4130**	8″	4 7/8″	11 5/8″	**28-4131**

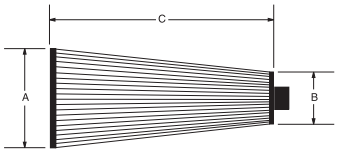

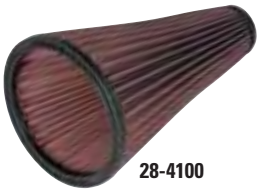
28-4100

Drag Racing Scoop Filters

Engineered with two filter elements to provide maximum airflow and protection. Designed to fit specific scoop designs. Mounts inside the front lip of the scoop with Dzus fasteners.

DESCRIPTION	PART#
Harwood 3158 Scoop Filter	**28-4215**
Harwood 3153 Scoop Filter	**28-4135**
Harwood 3160, 3161, 3164, 3166 Scoop Filter	**28-4145**
Harwood 3160, 3161, 3164, 3166 SHORT Scoop Filter	**28-4150**
Harwood 3152 Scoop Filter	**28-4155**
Harwood 3182 Scoop Filter	**28-4180**
Quarter-Max RJF1 Scoop Filter	**28-4140**
Quarter-Max RJF1 SHORT Scoop Filter	**28-4185**
Don Davis Scoop Filter 10″ depth	**28-4195**
Don Davis Scoop Filter 6″ depth	**28-4200**
K&N Hood Scoop Filter, Fits 100-8505/100-8512	**28-4215**
K&N Hood Scoops Filter, 100-8506 and 100-8508	**28-4210**

28-4210

28-4180

Doorslammer Composite Hood Scoop

Created through CFD (computational fluid dynamics) and SolidWorks (CAD software) for a low drag design which resulted in 18-lb decrease in drag. Each hood scoop is made of carbon fiber and was designed to fit Pro Stock, Super Stock, Super Gas, Top Sportsman and Pro Mod cars.

DESCRIPTION	PART#
50 sq. inch, D-Shaped Opening, 10″ Height	**100-8506**
50 sq. inch, D-Shaped Opening, 11″ Height	**100-8508**
Gen 2, 50 sq. inch, D-Shaped Opening, 11” height	**100-8515**
Gen 2, 54 sq. inch, D-Shaped Opening, 11” height	**100-8516**
Gen 2, 58 sq. inch, D-Shaped Opening, 11” height	**100-8517**
Inner Hood Scoop Pan: 7.25″ Dominator Carb	**100-8509**
Inner Hood Scoop Pan: 8.00″ Braswell Carb	**100-8510**
Inner Hood Scoop Pan: 5.5” Braswell Carb	**100-8520**
Inner Hood Scoop Pan, No Holes	**100-8514**
Carbon Fiber Inner Scoop Liner Set	**100-8511**
Carbon Fiber Hood Scoop Plug for 50 sq. inch hood scoops	**100-8519**
Carbon Fiber Hood Scoop Plug for 58 sq. inch hood scoops	**100-8518**

Composite Dragster Scoop

Our intake scoops have been designed with the latest technology available by taking the air principles and the cosmetic appeal of carbon fiber to produce an attractive air scoop.

DESCRIPTION	PART#
Scoop and Pan, 25 sq. inch opening	**100-8503**
Standard Holley® 4 BBL Filter Assembly, Scoop and Base	**100-8504**
Holley® Dominator Air Filter Assembly, Scoop and Base	**100-8505**
Gen 2 Scoop and Pan, 50 sq. inch opening	**100-8512**

100-8517
100-8512
100-8503
100-8514

For Racing Vehicles Using VW Engines

Universal air filter designed for 2 1/16″ VW Solex and 2 9/16″ Zenith-Holley carburetors. One piece construction with a strong rubber base and flange that clamps directly to the carburetor. Some units have 1/2″ vent kits included, for easy installation of vent hoses. Choice of show quality chrome or rubber top. Chrome adds a touch of class, rubber is great for rugged off-road use. Three shapes or styles and numerous heights available - see listings below.

VW Solex Carb With 2 1/16″ Flange

FLANGE I.D.	FILTER DIMENSIONS	FILTER HEIGHT	RUBBER PART#	CHROME PART#
ROUND CENTER MOUNT				
2 1/16″	3 1/2″	4″	**RA-0500**	**RA-050V**
2 1/16″	3 1/2″	5″	**RA-0510**	N/A
2 1/16″	3 1/2″	6″	**RA-0520**	N/A
2 1/16″	4 1/2″	4″	**RA-0530**	N/A
2 1/16″	4 1/2″	5″	**RA-0540**	N/A
2 1/16″	5 1/2″	2″	**RA-0550***	**RA-055V***
2 1/16″	5 1/2″	3″	**RA-0560***	**RA-056V***
2 1/16″	5 1/2″	4″	**RA-0570***	**RA-057V***
2 1/16″	5 1/2″	5″	**RA-0580***	**RA-058V***
ROUND OFFSET MOUNT				
2 1/16″	6″	2″	**RA-0450***	**RA-045V***
2 1/16″	6″	3″	**RA-0460***	**RA-046V***
2 1/16″	6″	4″	**RA-0470***	**RA-047V***
OVAL OFFSET MOUNT				
2 1/16″	4 1/2″ x 7″	1 1/2″	**RA-0700***	**RA-070V***
2 1/16″	4 1/2″ x 7″	2″	**RA-0710***	**RA-071V***
2 1/16″	4 1/2″ x 7″	3″	**RA-0720***	**RA-072V***

*1/2″ vent comes as standard equipment.

These filters are legal ONLY for racing vehicles. Not applicable, nor intended for use on emission controlled street or highway vehicles. These filters are not applicable, nor intended for use on aircraft.

Zenith-Holley Carb With 2 9/16″ Flange

FLANGE I.D.	FILTER DIMENSIONS	FILTER HEIGHT	RUBBER PART#	CHROME PART#
ROUND CENTER MOUNT				
2 9/16″	4 1/2″	4″	**RA-0600**	N/A
2 9/16″	4 1/2″	5″	**RA-0610**	N/A
2 9/16″	5 1/2″	2″	**RA-0620***	**RA-062V***
2 9/16″	5 1/2″	3″	**RA-0630***	**RA-063V***
2 9/16″	5 1/2″	4″	**RA-0640***	N/A
2 9/16″	5 1/2″	5″	**RA-0650***	N/A
ROUND OFFSET MOUNT				
2 9/16″	6″	2″	**RA-0660***	**RA-066V***
2 9/16″	6″	3″	**RA-0670***	**RA-067V***
2 9/16″	6″	4″	**RA-0680***	**RA-068V***
OVAL OFFSET MOUNT				
2 9/16″	4 1/2″ x 7″	1 1/2″	**RA-0750***	**RA-075V***
2 9/16″	4 1/2″ x 7″	2″	**RA-0760***	**RA-076V***
2 9/16″	4 1/2″ x 7″	3″	**RA-0770***	**RA-077V***

Carburetor Adapters

For remote mounting of air filter using smooth bore 3″ I.D. hose. Do not use accordion flex hose as it restricts airflow and is difficult to seal properly.

CARBURETOR	FLANGE SIZE	ADAPTER O.D.	PART#
VW Solex	2 1/32″	3″	**85-1010**

Custom Air Filters For Weber Carburetors

56-1210

K&N Custom Air Filter kits are designed to allow the maximum performance from your carburetors, yet keep the dirt on the outside where it belongs. Show quality to fit racing vehicles with VW, Pinto or any other engine equipped with these performance carburetors. All air filter kits come with custom chrome top and base plates (except IDA Triple) and the famous K&N High-Flow Washable Air Filter. All air filter kits are convenient to clean and service.

APPLICATION	FILTER STYLE	OUTSIDE DIMENSION	HEIGHT	ELEMENT PART#	NOTE	ASSEMBLY PART#
DAR, DIR, DIF 32/36	DDO	5 1/2″ x 9″	1 3/4″	**E-3441**	2	**56-1010**
	DDO	5 1/2″ x 9″	3 1/4″	**E-3461**	1, 2	**56-1020**
DATRA, DATRE 34/36	DDO	5 1/2″ x 9″	1 3/4″	**E-3441**	2, 10	**56-1651**
	DDO	5 1/2″ x 9″	3 1/4″	**E-3461**	2, 10	**56-1652**
	DDO	5 1/2″ x 9″	1 3/4″	**E-3441**	2, 11	**56-1650**
	DDO	5 1/2″ x 9″	3 1/4″	**E-3461**	2, 11	**56-1660**
DCD, DAS, DCLD, DCS 28/36	DDO	4 1/2″ x 7″	2 3/4″	**E-3325**	2	**56-1640**
DCN 40-14	DDO	4 1/2″ x 7″	3 1/4″	**E-3341**	•	**56-1080**
DCNF 36, 40, 42, 44	DDO	4 1/2″ x 7″	1 3/4″	**E-3321**	7	**56-1110**
	DDO	4 1/2″ x 7″	3 1/4″	**E-3341**	7	**56-1120**
	DDO	5 1/2″ x 9″	3 1/4″	**E-3461**	7	**56-1130**
	DDO	5 1/2″ x 9″	3 1/4″	**E-3461**	2, 3, 7	**56-1140**
	DDO	5 1/2″ x 9″	2″	**E-3442**	2, 3	**56-1150**
DCOE 40, 42	SDO	4 1/2″ x 7″	1 3/4″	**E-3321**	5	**56-1270**
	SDO	4 1/2″ x 7″	3 1/4″	**E-3341**	6	**56-1350**
	SDO	5 1/2″ x 9″	3 1/4″	**E-3461**	6	**56-1360**
DCOE 45, 48	SDO	4 1/2″ x 7″	1 3/4″	**E-3321**	5	**56-1310**
	SDO	5 1/2″ x 9″	1 3/4″	**E-3441**	5	**56-1330**
	SDO	4 1/2″ x 7″	3 1/4″	**E-3341**	6	**56-1350**
	SDO	5 1/2″ x 9″	3 1/4″	**E-3461**	6	**56-1360**
	REC	6 1/2″ x 7 1/2″	1 3/4″	**E-3960**	5	•
DCOE 50, DCOE SP48, 55	SDO	4 1/2″ x 7″	3 1/4″	**E-3341**	6	**56-1710**
	SDO	5 1/2″ x 9″	3 1/4″	**E-3461**	6	**56-1720**

APPLICATION	FILTER STYLE	OUTSIDE DIMENSION	HEIGHT	ELEMENT PART#	NOTE	ASSEMBLY PART#
DFT	DDO	5 1/2″ x 9″	3 1/4″	**E-3461**	•	**56-1730**
DFB, DFD, DFE, DFV 32/36	DDO	5 1/2″ x 9″	1 3/4″	**E-3441**	2	**56-1010**
	DDO	5 1/2″ x 9″	3 1/4″	**E-3461**	1, 2	**56-1020**
DGV, DGV5A, DGAV, DGEV, DPS 32/36	DDO	3 1/4″ x 4 3/8″ top 4 1/2″ x 7″ base	4″	**E-9141**	10	**56-9290**
	DDO	4 1/2″ x 7″	1 3/4″	**E-3321**	•	**56-1030**
	DDO	4 1/2″ x 7″	3 1/4″	**E-3341**	•	**56-1040**
	DDO	5 1/2″ x 9″	1 3/4″	**E-3441**	2	**56-1070**
	DDO	5 1/2″ x 9″	3 1/4″	**E-3461**	2	**56-1060**
DMTR 34/36	DDO	5 1/2″ x 9″	1 3/4″	**E-3321**	2, 10	**56-1651**
	DDO	5 1/2″ x 9″	3 1/4″	**E-3341**	2, 10	**56-1652**
	DDO	5 1/2″ x 9″	1 3/4″	**E-3441**	2, 11	**56-1650**
	DDO	5 1/2″ x 9″	3 1/4″	**E-3461**	2, 11	**56-1660**
IDA 48	DDO	5 1/2″ x 9″	3 1/4″	**E-3461**	•	**56-1210**
	DDO	5 1/2″ x 9″	4 1/2″	**E-3471**	•	**56-1220**
	DDO	5 1/2″ x 9″	5 1/2″	**E-3481**	•	**56-1230**
IDA Triple 40, 46-Porsche F6 Eng.	DDO	5 1/2″ x 12″	3 1/4″	**E-3671**	4	**56-1770-2**
	DDO	5 1/2″ x 12″	6″	**E-3676**	4	•
IDF 40, 44, 48, 44MX	DDO	4 1/2″ x 7″	1 3/4″	**E-3321**	•	**56-1160**
	DDO	4 1/2″ x 7″	3 1/4″	**E-3341**	•	**56-1170**
	DDO	5 1/2″ x 9″	1 3/4″	**E-3441**	•	•
	DDO	5 1/2″ x 9″	3 1/4″	**E-3461**	•	**56-1190**
	DDO	5 1/2″ x 9″	6″	**E-3491**	8, 9	**56-1200**

Filter Styles: DDO= down draft oval; DDR= down draft round; SDO= side draft oval; SDR= side draft round; REC= rectangle. These filters are legal ONLY for racing vehicles. Not applicable, nor intended for use on emission controlled street or highway vehicles. These filters are not applicable, nor intended for use on aircraft. Each filter sold individually.

Notes: 1) includes cast aluminum velocity stack; 2) 1/2″ vent elbow included; 3) oval filter air filter kit is turned 90 degrees to the base of carburetor flange (4 stud base); 4) cast aluminum top and base powder coated black; 5) must remove Weber airhorns; 6) works with Weber airhorns; 7) mounting bolt kit included; 8) must use separate velocity stacks to mount filter; 9) new improved racing version has stronger center tree and 4 springs to hold top plate; 10) filter is turned 90 degrees to centerlines of carburetor bore; 11) filter is mounted centered to carburetor bores.

Custom 66 Series™

Fits single 5 1/8″ flange carburetors.

FLAMED

SCALLOPED

ELECTRIC

Flamed Design

DESCRIPTION	DIMENSIONS*	PART#
Large Oval	15″ x 8 1/4″ x 3″h	66-1470
	15″ x 8 1/4″ x 5″h	66-1460
Small Oval	11 7/8″ x 8 3/8″ x 3″h	66-1530
	11 7/8″ x 8 3/8″ x 5″h	66-1520

Scalloped Design

DESCRIPTION	DIMENSIONS*	PART#
Large Oval	15″ x 8 1/4″ x 3″h	66-1490
	15″ x 8 1/4″ x 5″h	66-1480
Small Oval	11 7/8″ x 8 3/8″ x 3″h	66-1550
	11 7/8″ x 8 3/8″ x 5″h	66-1540

Electric Design

DESCRIPTION	DIMENSIONS*	PART#
Large Oval	15″ x 8 1/4″ x 3″h	66-1510
	15″ x 8 1/4″ x 5″h	66-1500
Small Oval	11 7/8″ x 8 3/8″ x 3″h	66-1570
	11 7/8″ x 8 3/8″ x 5″h	66-1560

* Complete Assembly Dimensions

Replacement Elements

DESCRIPTION	ELEMENT HEIGHT	PART#
For Large Oval Assemblies	2″	E-3515
	4″	E-3514
For Small Oval Assemblies	2″	E-3505
	4″	E-3504

Billet Aluminum Spoked Lids

These 14″ assemblies feature a billet aluminum spoked lid with a carbon fiber insert and include our popular 3″ tall E-1650 element. Both fit 5 1/8″ carburetor flanges and are available with either 1 1/4″ drop base or standard 9/16″ raised base.

5 Spoke Round Design

DESCRIPTION	PART#
5 Spoke with 1 1/4″ drop base; 2 3/4″ total height	66-5090
5 Spoke with standard 9/16″ raised base; 4 5/8″ total height	66-5100
5 Spoke Top Plate	85-6848

10 Spoke Round Design

DESCRIPTION	PART#
10 Spoke with 1 1/4″ drop base; 2 3/4″ total height	66-5110
10 Spoke with standard 9/16″ raised base; 4 5/8″ total height	66-5120
10 Spoke Top Plate	85-6850

Fits carburetors with 6 1/2″ center to center.

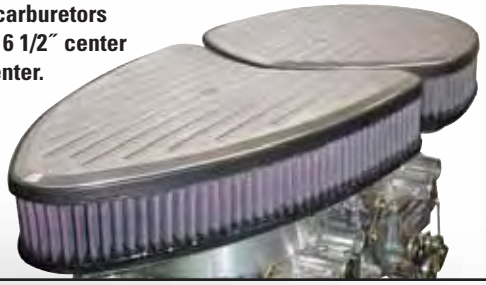

Dual Quad

DESCRIPTION	PART#
Dual Quad Assembly (Arrow & Oval)	66-5080
Dual Quad Arrow Assembly	66-5080F
Dual Quad Oval Assembly	66-5080R

Nostalgia Air Filter Kits

These custom air cleaner filter kits are designed for use on nostalgia engines. They incorporate our famous K&N Air Filters and are designed to provide more airflow than other air filter kits of this type. Available in 4 different styles.

Four-Inch Chrome Top Sides Open

Round open style air filter kits fit nearly all early model carburetor's with 2 3/16″ or 2 5/8″ flange diameter. Assemblies are 4″ in diameter and measure 3″ from base to the top of the wingnut.

DESCRIPTION	PART#
Single Assembly	60-0400
3 Complete Assemblies	60-0403
Single Replacement Element for 60-0400	E-3120

Pontiac Tri-Power Air Cleaners - Chrome

Designed for Pontiac 389, 400, 421 and 428 engines equipped with Tri-Power. Available in two flange sizes 2 5/8″ and 3 1/16″. Some mounting flange sizes vary by model year. Make sure to measure before ordering.

DESCRIPTION	PART#
Single Assembly- 2 5/8″	60-1331
Single Assembly - 3 1/16″	60-1340
3 Complete Assemblies 2 5/8″	60-1333
One 2 5/8″ + Two 3 1/16″ Assemblies	60-1350
Single Replacement Element for all air filter kits	E-3200

Four-Inch Louvered Chrome Bonnet

Louvered Bonnet air filter kits have a 4″ O.D. base with a 2 5/8″ flange and 2 3/16″ flange adapter. The 4 5/8″ O.D. Bonnet measures 3″ total height**.

DESCRIPTION	PART#
Single Assembly	60-0500
3 Complete Assemblies	60-0503

** Total Height= minimum clearance required above carburetor flange

Four-Inch Finned Aluminum Top Filters

Round one-piece filters are molded into the aluminum base and finned top with an "as cast" finish that can be painted, polished or left as is. They fit carburetors with a 2 5/8″ flange diameter and are held in one place with a setscrew. These filters are 4″ in diameter and measure 2 3/4″ in length from base of flange to top.

DESCRIPTION	PART#
Single Assembly	60-0410
3 Complete Assemblies	60-0413

Custom Air Filters For Single or Two Barrel Carbs

Designed to allow the maximum performance from your carburetors, K&N Custom Air Filter kits keep the dirt on the outside where it belongs. Show quality and ideal for racing vehicles, these air filter kits come with custom chrome top and base plates and a famous K&N High-Flow Air Filter™. All air filter kits are convenient to clean and service.

56-1390

APPLICATION	FILTER STYLE	OUTSIDE DIMENSION	HEIGHT	ELEMENT PART#	NOTE	ASSEMBLY PART#
Autolite 32/36 (2bbl.)	DDO	5 1/2″ x 9″	1 3/4″	E-3441	3	56-1010
	DDO	5 1/2″ X 9″	3 1/4″	E-3461	2, 3	56-1020
Dellorto DHLA - 40, 45, 48	SDO	4 1/2″ x 7″	1 3/4″	E-3321	12	56-1310
	SDO	4 1/2″ x 7″	3 1/4″	E-3341	•	56-1320
	SDO	5 1/2″ x 9″	1 3/4″	E-3441	12	56-1330
Dellorto DRLA - 36, 40, 45, 48	DDO	4 1/2″ x 7″	1 3/4″	E-3321	12	56-1690
	DDO	4 1/2″ x 7″	3 1/4″	E-3341	•	56-1691
	DDO	5 1/2″ x 9″	3 1/4″	E-3461	•	56-1693
Fomoco 32/36 (2bbl.)	DDO	5 1/2″ x 9″	1 3/4″	E-3441	3	56-1010
	DDO	5 1/2″ x 9″	3 1/4″	E-3461	2, 3	56-1020
Hitachi (73-74 Datsun 240, 260Z	SDR	5 7/8″	3 1/4″	E-3190	1, 11	56-1430
Hitachi	SDR	5 7/8″	2 1/4″	E-9143	•	56-9138
Holley 5200 w/EFC	DDO	4 1/2″ x 7″	1 3/4″	E-3315	•	•
	DDO	4 1/2″ x 7″	3 1/4″	E-3317	•	•
ISO (70-72 Datsun 240Z)	SDR	5 7/8″	3 1/4″	E-3190	6, 10	56-1410
Kadron-Solex H40 E/S (Brazil)	DDR	7″	4″	E-2510	13, 16	56-1490
	DDR	5 7/8″	3 3/4″	E-3210	14, 16	56-1520
Mikuni - Solex 36 PHH	SDO	4 1/2″ x 7″	1 3/4″	E-3321	•	56-1370
	SDO	4 1/2″ x 7″	3 1/4″	E-3341	•	56-1380
Mikuni - Solex 40, 44, 48 PHH	SDO	4 1/2″ x 7″	1 3/4″	E-3321	12	56-1310
	SDO	4 1/2″ x 7″	3 1/4″	E-3341	•	56-1350
	SDO	5 1/2″ x 9″	1 3/4″	E-3441	12	56-1330
	SDO	5 1/2″ x 9″	3 1/4″	E-3461	•	56-1360

APPLICATION	FILTER STYLE	OUTSIDE DIMENSION	HEIGHT	ELEMENT PART#	NOTE	ASSEMBLY PART#
Motorcraft 32/36 (2bbl.)	DDO	5 1/2″ x 9″	1 3/4″	E-3441	3	56-1010
	DDO	5 1/2″ x 9″	3 1/4″	E-3461	2, 3	56-1020
SK Racing	SDO	4 1/2″ x 7″	3 1/4″	E-3341	3	56-1010
	SDO	5 1/2″ x 9″	3 1/4″	E-3461	2, 3	56-1020
Solex 40 P11 (Porsche 912)	DDO	5 1/2″ x 9″	3 1/4″	E-3461	15, 17	56-1255
Solex 34/34 Progressive	DDO	4 1/2″ x 7″	1 3/4″	E-3321	3, 21	56-1701
	DDO	4 1/2″ x 7″	3 1/4″	E-3341	3, 21	56-1703
	DDO	5 1/2″ x 9″	1 3/4″	E-3441	3, 21	56-1650
	DDO	5 1/2″ x 9″	3 1/4″	E-3461	3, 21	56-1660
	DDO	5 1/2″ x 9″	1 3/4″	E-3441	3, 20	56-1651
	DDO	5 1/2″ x 9″	3 1/4″	E-3461	3, 20	56-1652
Stromberg 150	SDR	5 7/8″	1 3/4″	E-3211	•	56-1610
Stromberg 175	SDR	5 7/8″	1 3/4″	E-3211	•	56-1620
	SDR	5 7/8″	3 1/4″	E-3213	•	56-1622
SU 1 1/4 Bore	SDR	5 7/8″	1 13/16″	E-3212	10, 17	56-1630
SU 1 1/2 Bore	SDR	5 7/8″	1 3/4″	E-3180	10	56-1390
SU 1 1/2 Bore HIF4, HIF6, HIF38	SDR	5 7/8″b, 3 1/2″t	2 11/16″	E-9156	•	56-9320
SU 1 3/4 Bore (Not HIF6)	SDR	5 7/8″	1 3/4″	E-3180	10	56-1400
SU 1 3/4 Bore HIF6	SDR	5 7/8″b, 3 1/2″t	2 11/16″	E-9156	•	56-9330
SU 1 3/4 Bore HS6	SDR	5 7/8″b, 3 1/2″t	2 11/16″	E-9156	•	56-9327
SU (70-72 Datsun 240Z)	SDR	5 7/8″	3 1/4″	E-3190	•	56-1430
SU (73-74 Datsun 240, 260Z)	SDR	5 7/8″	3 1/4″	E-3190	1, 11	56-1430

Notes: Filter Styles: DDO= down draft oval; DDR= down draft round; SDO= side draft oval; SDR= side draft round; REC= rectangle. 1) 1 15/16″ x 19/16″ rectangle opening in baseplate; 2) includes cast aluminum velocity stack; 3) 1/2″ vent elbow included; 6) 1 3/4″ opening in baseplate; 10) 2 bolt mount; 11) 3 bolt mount; 12) will not work with velocity stacks; 13) 2 5/8″ flange, will not fit VW engine with large fan shrouds; 14) special offset base allows use of larger fan shrouds on VW engines; 15) mounting bolt kit included; 16) **E-2410** fits original Kadron filter case; 17) includes optional vent; 20) filter is turned 90 degrees to centerlines of carburetor bore; 21) filter is mounted centered to carburetor bores.

These filters are legal ONLY for racing vehicles. Not applicable, nor intended for use on emission controlled street or highway vehicles. These filters are not applicable, nor intended for use on aircraft.

14-Inch Drop Base Air Filter Kits - Chrome

Low profile air cleaner drops filter 7/8″ or 1 1/4″ below carburetor flange. 5 1/8″ flange fits most 4 barrel carburetors and four element heights fit a wide variety of applications. Note: 7/8″ drop will fit carburetors with electric choke mechanisms.

NECK FLANGE	ELEMENT HEIGHT	ELEMENT	COMPLETE ASSY.	TOTAL HEIGHT**
1 1/4″ DROP BASE				
5 1/8″	3″	**E-1650**	**60-1280**[*, 2]	2.75″
5 1/8″	4″	**E-3750**	**60-1290**[*, 2]	3.75″
5 1/8″	5″	**E-3760**	**60-1300**[*, 2]	4.75″
5 1/8″	6″	**E-3770**	**60-1310**[2]	5.75″
7/8″ DROP BASE				
5 1/8″	3″	**E-1650**	**60-1430**[2]	3.12″
5 1/8″	4″	**E-3750**	**60-1440**[2]	4.12″
5 1/8″	5″	**E-3760**	**60-1450**[2]	5.12″
5 1/8″	6″	**E-3770**	**60-1460**[2]	6.12″

*Will not fit Edelbrock carbs with electric choke.

14-Inch Air Filter kits - Chrome

Popular 14″ chrome racing style filter kit. Raises element 9/16″ above carburetor flange. 5 1/8″ flange fits most 4 barrel carburetors. Four element heights to fit a wide variety of applications. Will clear HEI distributors.

NECK FLANGE	ELEMENT HEIGHT	ELEMENT	COMPLETE ASSEMBLY	TOTAL HEIGHT**
5 1/8″	2 5/16″	**E-3740**	**60-1263**[1]	3.87″
5 1/8″	3″	**E-1650**	**60-1264**[1]	4.62″
5 1/8″	4″	**E-3750**	**60-1260**[1]	5.62″
5 1/8″	5″	**E-3760**	**60-1270**[1]	6.62″

11, 14 & 16-Inch Dominator Air Filter Kits - Chrome

These K&N 11″, 14″ & 16″ outer diameter race-ready air cleaners can flow the amount of air required for the Holley® Dominator carburetors. 11″ & 14″ have 7 5/16″ flange base and a 3/4″ rise velocity stack. 16″ has 1″ drop base.

NECK FLANGE	ELEMENT HEIGHT	ELEMENT	COMPLETE ASSEMBLY	TOTAL HEIGHT**
11″ OD AIR FILTER				
7 5/16″	3 1/2″	**E-1250**	**60-1230**	4.50″
7 5/16″	5″	**E-3680**	**60-1240**	6.00″
7 5/16″	6″	**E-3690**	**60-1250**	7.00″
14″ OD AIR FILTER				
7 5/16″	4″	**E-3750**	**60-1235**[5]	5.50″
7 5/16″	5″	**E-3760**	**60-1245**[5]	6.50″
7 5/16″	6″	**E-3770**	**60-1255**[5]	7.50″
16″ OD AIR FILTER				
7 5/16″	3 1/2″	**E-3804**[7]	**60-1640**[7]	3.25″

11-Inch Air Filter Kits - Chrome

The perfect application for when space is a premium, yet high performance is required. Base is available in three (3) flange sizes and various heights to fit a wide variety of applications.

NECK FLANGE	ELEMENT HEIGHT	ELEMENT	COMPLETE ASSEMBLY	TOTAL HEIGHT**
2 5/8″	2 1/8″	**E-1200**	**60-1130**[3, 6]	3.12″
2 5/8″	3 1/2″	**E-1250**	**60-1140**[3, 6]	4.50″
5 1/8″	2 1/8″	**E-1200**	**60-1170**[4, 6]	3.12″
5 1/8″	2 3/16″	**E-1200**	**60-1150**[6]	3.37″
5 1/8″	3 1/2″	**E-1250**	**60-1180**[4]	4.75″
5 1/8″	5″	**E-3680**	**60-1190**[6]	6.00″
5 1/8″	5″	**E-3680**	**60-1200**[4, 6]	6.00″
5 1/8″	6″	**E-3690**	**60-1210**[4, 6]	7.00″
5 1/8″	6″	**E-3690**	**60-1220**[6]	7.00″

Footnotes: ** Total Height= minimum clearance required above carburetor flange. 1) Includes vent kit; 2) Vent kit available, Part# **85-1190**; 3) 1/2″ vent tube on base; 4) 3/4″ vent tube on base; 5) Top is chrome & Base is Hi-Temp nylon; 6) Stainless Steel top & chrome base; 7) 16″ diameter. **Will not fit "HP" series carb.**

9-Inch Air Filter Kits - Chrome

The ideal K&N Air Filter Kit when space is a problem. Five flange sizes and various heights assure a wide number of applications. Can be mounted on most dual carb setups. Polished stainless steel construction for top and base plates.

NECK FLANGE	ELEMENT HEIGHT	ELEMENT	COMPLETE ASSEMBLY	TOTAL HEIGHT**
2 5/8″	2″	**E-3527**	**60-1070**[4]	3.37″
2 5/8″	2 7/8″	**E-3530**	**60-1080**[4]	4.12″
3 1/16″	2 7/8″	**E-3530**	**60-1090**[4]	4.12″
4 7/32″	2 7/8″	**E-3530**	**60-1100**[4]	4.12″
5 1/8″	2″	**E-3527**	**60-1110**[4]	3.37″
5 1/8″	2 7/8″	**E-3530**	**60-1120**[4]	4.12″
5 1/8″	5″	**E-3650**	**60-1365**[4]	6.37″
7 5/16″	2 7/8″	**E-3530**	**60-1370**	4.12″
7 5/16″	5″	**E-3650**	**60-1366**	6.37″

7-Inch Air Filter Kits - Chrome

Ideal for that quality show car image. Four flange sizes to fit nearly all carburetors, even 5 1/8″ flange 4 barrels.

NECK FLANGE	ELEMENT HEIGHT	ELEMENT	COMPLETE ASSEMBLY	TOTAL HEIGHT**
2 5/16″	2″	**E-3360**	**60-1010**[3]	3.06″
2 5/16″	3″	**E-3380**	**60-1020**[3]	4.06″
2 5/8″	2″	**E-3360**	**60-1030**[3]	3.12″
2 5/8″	3″	**E-3380**	**60-1040**[3]	4.12″
3 1/16″	2″	**E-3360**	**60-1050**[3]	3.12″
5 1/8″	2″	**E-3402**	**60-1320**	2.93″
5 1/8″	3″	**E-3403**	**60-1330**	3.93″

9-Inch Velocity Stack Air Filter Kits - Stainless Steel

Open 360° free breathing 9″ air filter element on top of a 5″ high stainless steel velocity stack base. Draws in cooler air away from engine heat. Engines equipped with the K&N Tall Velocity Stack Air Filter can produce more horsepower than those with no filter at all. All stainless steel tops and bases, highly polished to a mirror finish. Available with 5 1/8″ flange to fit Holley®, Carter, or Rochester carburetors. Also available with 7 5/16″ flange to fit Holley® Dominator carburetors. Choice of two element heights assures proper airflow for virtually any engine. Note: These K&N assemblies are not U.S. Coast Guard approved for use as a flame arrestor.

NECK FLANGE	ELEMENT HEIGHT	ELEMENT	COMPLETE ASSEMBLY	TOTAL HEIGHT**
5 1/8″	2 7/8″	**E-3530**	**58-1190**	8.25″
5 1/8″	5″	**E-3650**	**58-1191**	10.50″
7 5/16″	2 7/8″	**E-3530**	**58-1200**	8.25″
7 5/16″	5″	**E-3650**	**58-1210**	10.50″

14-Inch Triangle Air Filter Kit - Chrome

K&N's custom chrome triangle filter kit is designed to make any engine compartment come to life. This triangle filter kit comes with a 3″ high K&N Air Filter, has smooth radius corners and fits most carburetors with 5 1/8″ flange.

NECK FLANGE	ELEMENT HEIGHT	ELEMENT	COMPLETE ASSEMBLY	TOTAL HEIGHT**
5 1/8″	3″	**E-3737**	**60-1470**	3.62″

Footnotes: ** Total Height = minimum clearance required above carburetor flange. 1) Includes vent kit; 2) Vent kit available, Part# **85-1190**; 3) 1/2 vent tube on base; 4) 3/4″ vent tube on base; 5) Top is chrome & Base is Hi-Temp nylon; 6) Stainless Steel top & chrome base; 7) 16″ diameter.
These filters are legal ONLY for racing vehicles. Not applicable, nor intended for use on emission controlled street or highway vehicles. These filters are not applicable, nor intended for use on aircraft. Will not fit "HP" series carb.

Custom Lids

XStream® Chevy & GMC Replacement Lids

Improve airflow and appearance on your late model Chevrolet-GMC truck and 1968 to 1995 GM vehicles with one of our new XStream® air cleaner lids. Each lid comes in deep luster chrome with our XStream® Air Flow Top built in! These direct replacement lids are an inexpensive way to dress up your engine compartment and increase your airflow. **Part# 66-1201, 66-1202 (Black)**

66-1201

85-6840

Carbon Fiber Lid

Combines all the necessary features for racing with the good looks only carbon fiber can provide. Easy to install. This top lid fits K&N air filter part numbers E-3740, E-1650, E-3743, E-3745, E-3730, E-3750, E-3732, E-3760, E-3770 or any round air filter with a 14″ outside diameter. At 4.6 oz, this lid weighs 1/4 as much as our standard chrome top plate. Center rises 1″. **Part# 85-6840**

Chrome Lid

This chrome plated steel top lid is stamped with the K&N logo and is easy to install. It fits K&N air filter part numbers E-3740, E-1650, E-3743, E-3745, E-3730, E-3750, E-3732, E-3760, E-3770 or any round air filter with a 14″ outside diameter. Center rises 1″. **Part# 85-6842**

85-6842

Chevy/GMC Chrome Tops

Improve the overall appearance of the engine compartment on your late model Chevrolet-GMC truck and 1968 to 1992 GM vehicles with one of our chrome air cleaner lids. Each lid comes in a deep luster chrome embossed with the K&N logo. These direct replacement lids are an inexpensive way to dress up your engine compartment without disturbing emission control equipment. Available separately or packaged with an E-1500 filter element to make a complete kit.

CE-1501 Air cleaner base and snorkel not included.

DESCRIPTION	PART#
68-92 GM V8 vehicles (w/single wing nut) using 12″ o.d. x 3 1/2″ h. filter	
Complete Kit With Chrome Top Lid and Replacement Filter (E-1500)	CE-1501
Chrome Top Lid Only (see CE-1501)	85-6846
93-95 Chevy/GMC Pickup (w/dual wing nuts) V8 Complete Kit With Chrome Top Lid and Replacement Filter (E-1500)	CE-1502
Chrome Top Lid Only (see CE-1502)	85-6844
68-95 Chevy/GMC XStream Flow Top Lid	CE-1503

85-6844

Custom Air Filter Base Plates

K&N's 14″ air filter plates are available separately for replacement or special applications. Base plates fit carburetors with 5 1/8″ or 7 5/16″ airhorn flange. Drop base will clear most electric choke mechanisms, it may be necessary to space up baseplate with a locally available air cleaner spacer.

DESCRIPTION	PART#
14″ O.D. drop base, Chrome plated steel, 5 1/8″ flange (drops filter 7/8″ below carb flange)	85-3545
14″ O.D. drop base Chrome plated steel, 5 1/8″ flange (drops filter 1 1/4″ below carb flange)	85-3549
14″ O.D. flat base Chrome plated steel, 5 1/8″ flange (raises filter 9/16″ above carb flange)	85-1541
14″ O.D. flat base Nylon reinforced plastic, 7 5/16″ flange (raises filter 3/4″ above carb flange)	85-3552
14″ O.D. offset flat base, Chrome plated steel, 5 1/8" flange (sets filter 1 1/2″ off carb flange)	85-3540
Offset stud for use with 85-3540	08006

85-3545

85-1541

85-3552

85-3549

Off-Road Filters

These off-road filters are designed to provide an outstanding combination of filtration and performance. Designed to achieve high, virtually unrestricted airflow while maintaining filtration levels critical to your engine.

Go to page 481 for air filter cleaning accessories

55-1000

DESCRIPTION	PART#
Covered Round Assembly with 3″ outlet. Aluminum cover allows extra protection for filter element. Filter size 9″ Dia. by 3″ tall.	55-1120
Replacement Element	E-3600

DESCRIPTION	PART#
Fits inside the UMP Off-Road Air Box with 3″ outlet	55-1000
Fits inside the UMP Off-Road Air Box with 4″ outlet	55-1001

Both include sealing grease and DryCharger®.

Custom Plenum

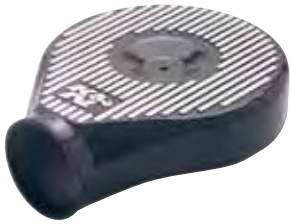

Cast aluminum plenum, finished with black powder coating and natural highlights. Designed to fit most 4 barrel carbs with a 5 1/8″ flange. The plenum has a single snorkel outlet that can be fitted with a 4″ I.D. hose running to a remote air filter. Or a K&N universal filter with a 4″ flange can be clamped directly on the snorkel. The outside diameter of the plenum is 9″ and the snorkel sticks out 6″ from the center of the plenum. Minimum clearance required above the carburetor flange is 3 1/8″. Customer must provide 1/4″-20 hold down stud. **Part# 85-1060**

Note: The custom plenum is recommended for small displacement engines (less than 200 C.I.) or low revving V6-V8 engines. If the engine requires more than 45 sq. in. of filter area then the plenum should not be used because the carburetor would have to be re-jetted, resulting in a loss of high R.P.M. power.

Mini Plenum

85-8927

Cast aluminum plenum designed to fit Weber DGV carburetors. Single or dual snorkel accepts 2 1/2″ I.D. hose or 2 1/2″ flanged K&N universal air filter. Plenum diameter is 5 3/4″ and the snout sticks out 4″ from the center. 2 1/2″ clearance needed above carburetor flange. Includes adaptor part# 85-1061.

DESCRIPTION	PART#
Single Snout for Weber DGV series	85-8921
Dual Snout for Weber DGV series	85-8927

Air Cleaner Adapter for Weber DGV

Allows K&N custom round air cleaners, with 5 1/8″ flange, to be adapted to the Weber DGV carburetor.

See the Custom Assemblies Section for filters and base plates that will fit and for the various sizes and styles of air cleaners available. The DGV adapter comes complete with gaskets and mounting hardware - except customer must provide 1/4″-20 center stud. **Part# 85-1061**

Filter Minder®

The Filter Minder® monitors air filter restriction and indicates when an air filter should be serviced. As the air filter gets dirty, the yellow position indicator moves in the clear window of the Filter Minder® and locks at the highest point. It can even be read after the engine is turned off. The air filter should not be cleaned until the position indicator reaches the red zone. Reset the indicator to zero by pushing the yellow reset at the end of the Filter Minder®.

85-2445 85-2444

IMPORTANT NOTES:

Initial filter restriction may not occur until 50,000 miles or more depending on operating conditions. Diesel and off-road use requires more frequent cleanings. K&N Air filters become more efficient at stopping dirt as they build a dust film. The air filter should not be cleaned until the indicator reaches the red zone. Sometimes the position indicator can move in the window with a new air filter. This could be from high airflow engine requirements, high humidity, or rain. Do not be alarmed. The air filter should not be cleaned until the indicator reaches the red zone.

DESCRIPTION	PART#
1/8″ pipe threaded Filter Minder	85-2444
Grommet Mount Filter Minder	85-2445

Filter Minder ® is a registered trademark of Engineered Products Company.

Go to page 481 for air filter cleaning accessories

Fuel Injection Line Air Filters

A unique way to protect your high performance engine from contaminants entering through aeration holes in the fuel injection nozzles. K&N offers filters that slip onto the injector nozzle and protect the aeration hole from dust and debris. Sold individually, these filters have a 1 1/4″ OD and 1 1/16″ HT and fit securely over 1/4″ to 1/2″ fuel injection nozzles. **Part# E-3003**

In-Line Gas/Oil Filters

K&N inline fuel/oil filters can be used with a variety of oils and fuels including methanol. The filter material is made from stainless steel and the housing is anodized aluminum. These inline filters can be used in all forms of racing including, NASCAR®, drag racing, sprint car, and marine applications.

In-Line Gas/Oil Filter

FITTING TYPE	FILTER SIZE	PART#
6AN	25 MICRON	**81-1000**[1]
8AN	25 MICRON	**81-1001**[1]
10AN	25 MICRON	**81-1002**
10AN	74 MICRON	**81-1003**
10 WIGGINS	25 MICRON	**81-1004**
12AN	25 MICRON	**81-1005**
12 WIGGINS	40 MICRON	**81-1006**
12 WIGGINS	25 MICRON	**81-1007**

1) Fuel filter only. Replacement element not sold separately.

Replacement In-Line Filter Elements

FILTER SIZE	PART#
25 MICRON	**81-1008**
40 MICRON	**81-1009**
74 MICRON	**81-1010**
100 MICRON	**81-1011**

Air/Fuel Ratio Monitors

- A precision instrument designed to help calibrate optimum air/fuel mixtures
- Displays in clear LED lighting for added visibility
- Aids performance enthusiasts in curing jetting issues
- Allows tuning for maximum performance or optimum fuel economy
- Installation requires minor welding
- Ideal for carbureted, injected, supercharged or turbocharged engines, using unleaded gasoline, alcohol, propane or nitrous oxide
- NOT for use with nitromethane, diesel, or leaded fuels

Other products that will contaminate or clog the sensor are:

- **Gas/oil mixture**
- **Injector or carburetor cleaners containing lead additives**
- **Octane boosters containing lead**
- **Other "secret potions"**

	|----------ECONOMY----------|	|----------BEST ALL-AROUND----------|	|----------POWER----------|									
	LIGHT 1	LIGHT 2	LIGHT 3	LIGHT 4	LIGHT 5	LIGHT 6	LIGHT 7	LIGHT 8	LIGHT 9	LIGHT 10
Gasoline	17.1	16.0	15.1	14.7	14.7	14.7	14.7	14.0	13.2	12.1
Alcohol	7.6	7.1	6.7	6.5	6.5	6.5	6.5	6.1	5.8	5.3
Propane	17.9	16.8	15.9	15.6	15.6	15.6	15.6	15.0	14.0	13.0

DESCRIPTION	PART#
Rectangle "surface-mount" complete kit (includes monitor, sensor and weld-on fittings)	**85-2437**
Round "in-dash" complete kit (includes monitor, sensor and weld-on fittings)	**85-2441**
Rectangle monitor only	**85-2439**
Round monitor only	**85-2442**
Oxygen sensor only (includes weld-on fittings)	**85-2438**
Weld-on fitting	**85-21688**
O2 sensor plug	**85-21686**
Under-dash mount gauge bezel, for round monitor, black finish	**85-2443**
O2 sensor bushing and plug	**85-2440**

K&N Stubstacks®

K&N Stubstacks® are designed to reduce turbulence, improve metering accuracy, and increase the airflow by reducing restriction.

AIR FILTER APPLICATION: The Stubstack is designed to only work effectively with K&N Air Filter elements and 360° custom air cleaner assemblies. If the Stubstack is installed in an improper housing, the performance may actually drop! The minimum height above the stack needs to be at least 2 1/2″ for proper operation. Will not fit "HP" series carb. Check the K&N Custom Assemblies that will work properly.

Stubstack® for Holley® 2300

Fits most Holley® 2300 Series carburetors. The Stubstack® is designed to fit 2 barrel popular models within this series. Holley carburetor list numbers are stamped on the choke horn. **Part# 85-0210**

MODEL	LIST NO./CFM	LIST NO./CFM	LIST NO./CFM
2300	0-7448/350	0-4412/500	0-6425/650

Stubstack® for Holley® Square Bore with Milled Choke Horn

This Stubstack® is designed to be used with Holley® 390-850cfm square bore carbs (4150/4160), that have had the choke horn milled off and still use an air cleaner. Eliminates the need for hand polishing and radius work. Will work with all K&N Custom Chrome Racing Air Cleaners, including Tall Velocity Stack Air Cleaners. **Part# 85-0400**

Stubstack® for Holley® Square Bore with Milled Choke Horn

This Stubstack® is designed to be used on Holley® 390-850cfm square bore carbs (4150/4160), that have had the choke horn milled off, but do not use an air cleaner. The full radius design helps to increase the airflow for drag racing. Will also hold down the base plate of a cold air scoop. Will not work with K&N Custom Chrome Racing Air Cleaners. **Part# 85-0500**

Stubstack® for Holley® Dominator

This Stubstack® is designed to be used on Holley® 1050 & 1150 cfm Dominator carbs. Will not allow use of a standard air cleaner housing, but it will hold down the base plate of a cold air scoop. Designed to straighten airflow and helps even out the flow to all four venturies. Decreases the restriction around the throttle bores. **Part# 85-0600**

Stubstack® for Edelbrock Square-Bore Carburetors

Fits most Edelbrock Square-Bore carburetors. The Stubstack® is designed to fit almost every model within this series. This Stubstack straightens and speeds up airflow, reduces turbulence, improves metering accuracy and increases airflow by reducing restriction. Available for the Edelbrock part numbers. Will also fit some Carter AFB models. **Part# 85-0700**

MODEL#	CFM RATING	CHOKE TYPE	MODEL#	CFM RATING	CHOKE TYPE
1400	600 cfm	electric choke	1406	600 cfm	electric choke
1404	500 cfm	manual choke	1407	750 cfm	manual choke
1405	600 cfm	manual choke	1411	750 cfm	electric choke

Stubstack® for Demon 4150-Style Carburetors

This Stubstack® is designed to be used on Holley® 4150-style Race Demon Carburetors from 650 to 1000 CFM. Will also fit King Demon Carburetors from 1000 to 1190 CFM.This Stubstack straightens and speeds up airflow, reduces turbulence, improves metering accuracy and increases airflow by reducing restriction. **Part# 85-0800A**

K&N Custom Chrome Assemblies Compatible with Stubstack® 85-0200, 85-0210 and 85-0700 Only!

PART#	DIAMETER	TOTAL HEIGHT
60-1180 (w/vent)	11″ O.D.	4 1/2″
60-1190	11″ O.D.	6″
60-1200 (w/vent)	11″ O.D.	6″
60-1210 (w/vent)	11″ O.D.	7″
60-1220	11″ O.D.	7″
60-1260	14″ O.D.	5 5/8″
60-1270	14″ O.D.	6 5/8″
60-1300*	14″ O.D.	4 3/4″
60-1310*	14″ O.D.	5 3/4″

60-1180

Stubstack® for Holley® 4150/4160

Fits most Holley® 4150 and some 4160 Series carburetors with high and low choke horns. The 85-0200 is designed to fit 4 barrel popular models in this series. Holley carburetor list numbers are stamped on the choke horn. See the below chart for carburetor list numbers. **Part# 85-0200**

CARBURETOR LIST#	MODEL#	CFM RATING	CARBURETOR LIST#	MODEL#	CFM RATING	CARBURETOR LIST#	MODEL#	CFM RATING	CARBURETOR LIST#	MODEL#	CFM RATING	CARBURETOR LIST#	MODEL#	CFM RATING
0-1848-1	4160	465	0-4776**	4150	600	0-4780-3**	4150	800	0-6989	4160	600	0-8181	4160	600
0-1849	4160	550	0-4776-1**	4150	600	0-4781**	4150	850	0-7009	4160	600	0-8804**	4150	830
0-1850	4160	600	0-4776-2**	4150	600	0-4781-1**	4150	850	0-7009-1	4160	600	0-9002	4182	600
0-1850-1	4160	600	0-4777**	4150	650	0-4781-2**	4150	850	0-7154	4160	600	0-9040	4160	600
0-1850-2	4160	600	0-4777-1**	4150	650	0-4788**	4150	830	0-7410	4150	340	0-9210	4160	600
0-1850-3	4160	600	0-4777-2**	4150	650	0-4788-1**	4150	830	0-7411	4150	370	0-9219	4160	600
0-1850-4	4160	600	0-4778**	4150	700	0-6109	4150	750	0-7448	2300	350	0-9254	4160	600
0-2818	4150	600	0-4778-1**	4150	700	0-6299	4150	390	0-7985	4160	600	0-9379**	4150	750
0-2818-1	4150	600	0-4778-2**	4150	700	0-6299-1	4160	390	0-7986	4160	600	0-9380**	4150	850
0-3310*	4150	780	0-4779**	4150	750	0-6619	4160	600	0-7987	4160	600	0-9381**	4150	830
0-3310-1*	4150	780	0-4779-1**	4150	750	0-6619-1	4160	600	0-8004	4160	600	0-9626	4160	600
0-3310-2*	4160	750	0-4779-2**	4150	750	0-6895	4150	390	0-8005	4160	600			
0-4118*	4150	725	0-4779-5**	4150	750	0-6909	4160	600	0-8006	4160	600			
0-4452-1	4160	600	0-4780**	4150	800	0-6919	4150	800	0-8007	4160	390			
0-4452-2	4160	600	0-4780-1**	4150	800	0-6979	4160	600	0-8156**	4150	750			
0-4548	4160	450	0-4780-2**	4150	800	0-6979-1	4160	600	0-8162**	4150	850			

*Indicates dual feed fuel bowls.
**Indicates dual accel. pump & dual feed bowls.

Air Filter Adapters

- CAD Designed
- Made of High Quality Materials Such as Aluminum, Silicone or Reinforced Nylon
- One Year Limited Warranty

K&N Air Filter Adapters are perfect for the person looking to build their own intake system. Each component is designed with the latest CAD software to ensure exact tolerances and a perfect fit. Each adapter is configured to work in conjunction with K&N High-Flow Air Filters™ to ensure smooth non-turbulent air flow.

DESCRIPTION	ADAPTERS	PART#	GASKETS	PART#
TACOMA; 1995-99 L4-2.4L, 2.7L, 5" filter flange to mass air sensor	#230	**08781**	for #230 Adapter	**09040**
GM Truck/Corvette; 1999-04, 6" filter flange to mass air sensor	#240	**08783**	for #240 Adapter	**09033**
Ford Car/Truck V8, 1996-04, 6" Flange Filter to mass air sensor	#250	**08785**	for #250 Adapter	**09984**
Ford Car/Truck V6, 1997-04, 6" Flange Filter to mass air sensor	#290	**21504**	for #290 Adapter	**09330**
Ford/Mazda I4/V6, 1995-04, 5" Flange filter to mass air sensor	#350	**21510**	for #350 Adapter	**09202**
Nissan 3.3L V6, 2001-04, 5" Flange filter to mass air sensor	#360	**21511**	•	•
Mitsubishi I4, 2003-04, 6" Flange filter to mass air sensor	#390	**088010**	•	•
Ford Super Charged V8, 2003-04, 6" Flange filter to mass air sensor	#400	**21513**	for #400 Adapter	**09067**

Weld-On MAF Sensor Adapters

- Precision CNC Machined from 6061 Aluminum
- CAD Design for Accurate Mass Air Flow Sensor Readings
- One Year Limited Warranty

K&N Weld-On Mass Air Flow sensor adapters are designed to ensure a perfect MAF sensor fit. Re-positioning/installation of a MAF sensor can be a sensitive task. These precisely engineered adapters will ensure proper fitment. Weld-on MAF adapters are available for a majority of drop in MAF sensors styles and makes. Please call for applications.

DESCRIPTION	PART#
A2; 2005-06 Toyota Tundra V6, 2003-08 Mazda RX8	**08951**
A3; Toyota, Mazda, Subaru	**08952**
A4; Ford, GMC, Pontiac, Chevy, Isuzu, Nissan, Infiniti, Audi, VW, Toyota	**08954**
A5; Ford, GM, Toyota	**08955**
A7; Toyota	**08978**

Silicone Hose Couplers

- Made of the Highest Grade Silicone
- Standard Temperature Range of -65° F to 350° F

K&N Silicone Hose Couplers are made of the highest grade silicone for uniformity. They have a standard temperature range of -65° F to 350° F, and are available in an assortment of sizes ranging from 2 3/8″ - 5″. Elbows and hump hoses also available. One year limited warranty.

DESCRIPTION	PART#	DESCRIPTION	PART#
2.125" Dia. x 2" L	**85-1170**	2.5″ to 3.25″ Step	**084050**
2.25" Dia. x 2" L	**85-1160**	2.75″ to 2.38″ Step	**088003**
2.5″ Dia. x 2″ L	**08284**	2.75″ to 3″ Step	**08096**
2.63″ Dia. x 1.75″ L	**08108**	3.25″ to 3″ Step	**08186**
2.75″ Dia. x 1.50″ L	**08179**	3.5″ to 3″ Step	**08724**
2.75″ Dia. x 2″ L	**08756**	3.5″ to 3.25″ Step	**08051**
3″ Dia. x 1.75″ L	**08190**	3.75″ x 1.75″ L	**08536**
3″ Dia. x 2.5″ L	**08192**	3.75″ x 2.25″ L	**08760**
3.25″ Dia. x 2″ L	**08690**	4″ x 1.25″ L	**08712**
3.5″ Dia. x 2″ L	**08698**	4″ x 1.5″ L	**08755**
3.63″ Dia. x 2.5″ L	**08456**	4″ x 2″ L	**08761**
3″ Dia. to 2.5″ Step	**08713**	4″ x 3.5″ Step	**08050**
2.375″ to 3″ Step	**08188**	4.5″ x 1.75″ L	**08540**

Custom Air Filter Accessories

FOR 9″ CUSTOM AIR FILTER KITS	PART#
5 1/8″ Flange, Base Plate	**03351**
5 1/8″ Flange, Velocity Stack 5″ High	**03418**
7 5/16″ Flange, Base Plate	**03365**
7 5/16″ Flange, Velocity Stack 5″ High	**00283**
7 5/16″ Flange, Top Plate	**06883**

FOR 11″ CUSTOM AIR FILTER KITS	PART#
5 1/8″ Flange, Base Plate	**01988**
7 5/16″ Flange, Base Plate	**01518**

16″ CUSTOM AIR FILTER KITS	PART#
7 5/16″ Flange, Base Plate, 1″ Drop	**08984**
7 5/16″ Flange, Top Plate	**07377**

DELLORTO	PART#	DELLORTO	PART#
RAM PIPE DSS 40/20	**85-5029A**	RAM PIPE 45/20	**85-5032A**
RAM PIPE DSS 40/30	**85-5030A**	RAM PIPE DSS 45/40	**85-5034A**
RAM PIPE DSS 40/40	**85-5031A**		

WEBER	PART#	WEBER	PART#
RAM PIPE	**85-5042A**	RAM PIPE WSS 45/16	**85-5045A**
RAM PIPE WSS 40/26	**85-5043A**	RAM PIPE WSS 45/26	**85-5046A**
RAM PIPE WSS 40/39	**85-5044A**	RAM PIPE WSS 45/39	**85-5047A**

Valve Cover and Filter Vent Tubes

85-1050 85-1190 85-1120 85-1150 85-1210

Universal adapters for smog tubes, crankcase and valve cover vents. Requires drilling hole in air filter base or valve cover. All come with mounting hardware and gasket.

DESCRIPTION	PART#
Steel 1/2″ flange, 3/4″ long, requires 5/8″ hole	85-1050
Plastic straight adapter fits 5/8″ to 3/4″ hose	85-1130
Plastic 90° elbow fits 5/8″ hose, requires 7/8″ hole	85-1190
Plastic 90° elbow fits 1/2″ hose, requires 9/16″ hole	85-1120
Plastic 90° elbow fits 3/8″ hose, uses rubber grommet	85-1140
Plastic 90° elbow fits 1/2″ hose, uses rubber grommet	85-1150
Plastic screw-in for Ford valve covers, for mounting 1 1/2″ I.D. CV filter	85-1200
Plastic screw-in for late GM valve covers, for mounting 1 1/2″ I.D. CV filter	85-1210
Plastic universal mount, for any flat surface. Use 1 1/2″ I.D. CV filter	85-1220

Carburetor Covers

K&N carburetor covers for 5 1/8″ standard and 7 5/16″ dominator carburetors.

DESCRIPTION	BLACK	RED	ORANGE
5 1/8″	85-8913CK	85-8913CR	85-8913CO
7 5/16″	85-8932CK	85-8932CR	85-8932CO

Carburetor Adapter Flanges

85-1070 85-1090 85-1180

Quick convenient way to adapt K&N Universal Filter to carburetor with flat flange.

CARBURETOR FLANGE SIZE	BOLT CIRCLE	ADAPTER O.D.	ADAPTER WIDTH	ADAPTER PART#
1 1/8″ bore, 2-bolt	1 3/8″	2 3/4″	7/8″	85-1070
1″ bore, 2-bolt	45mm	2 7/16″	5/8″	85-1090
1″ bore, 2-bolt	40mm	2″	5/8″	85-1180

Fuel Line "T" Fitting

81-0271

Maximum flow, durable, light weight,easy to use. One size fits 1/4″ to 3/8″ I.D. hose.

DESCRIPTION	PART#
Packed 12 per card	81-0270
Packed 1 per card	81-0271

Marine Style Vent Hose Adapters

These vents mount in between the top and bottom plates of custom chrome air filter assemblies. Vent tube accommodates breather hose without drilling filter base.

HOSE SIZE	2 3/4″ FLTR HT	4″ FLTR HT	6″ FLTR HT
1/4″	85-1325	85-1425	85-1625
3/8″	85-1337	85-1437	85-1637
1/2″	85-1350	85-1450	85-1650
5/8″	85-1362	85-1462	85-1662
3/4″	85-1375	85-1475	85-1675

85-7493 85-7848 85-7855

Air Filter Hardware Kits

All kits are packaged on attractive display card.

DESCRIPTION	PART#
5mm x 12mm Hex head bolts5mm wafer washers (6 each)	85-7855
6mm x 12mm Hex head bolts, 6mm locknuts, 6mm wafer washers (4 each)	85-7863
1/4-20 Clip nuts, 1/4-20 x 3/4″ Phillips head (2 each)	85-8362
Washers: Stalen, 6mm wave, 5mm wave (6 each)	85-8221
O-ring for Weber IDA (2 each)	85-7728
O-ring for Weber DCOE (2 each)	85-7752
10-24 Acorn nuts, 10-24 wave washers (6 each)	85-7493
5mm x 10mm Socket head bolts, 5mm wave washers (4 each)	85-7848

Reinforced Rubber Washers

Made of 1/8″ thick reinforced neoprene rubber. Ideal for thin panels, fenders, number plates, air cleaner lids and other items that need to be rubber mounted.

DESCRIPTION	PART#
1) 1″ O.D., 1/4″ hole (12-10 packs per card)	81-0150
1) 1″ O.D., 1/4″ hole (single 10 pack)	81-0151
2) 1 1/4″ O.D., 5/16″ hole (12-8 packs per card)	81-0160
2) 1 1/4″ O.D., 5/16″ hole (single 8 pack)	81-0161

K&N Air Filter Gaskets

Gaskets used between air filter base and mounting flange of carburetor. All gaskets are full sets and packed on display card.

DESCRIPTION	PART#
2 & 4 barrel w/ 5 1/8″ neck (1/8″ thick)	85-9988*
Dellorto DHLA 40-48	85-9635
Dellorto DRLA 45, 48	85-9783
Holley 5200 w/EFC solenoid	85-9424
Solex 40 PII	85-9494
SU 1 1/2″	85-9715

DESCRIPTION	PART#
Weber DCNF 36,40,42,44	85-9447
Weber DCOE 40-48 w/o airhorns	85-9635
Weber DCOE 45-48 w/airhorns	85-9681
Weber DFB,DFD,DFE,DFV,DIF,DIR,DAR 32/36; Autolite 32/36; Holley 5200,5210 32/36; Motorcraft 32/36	85-9424

DESCRIPTION	PART#
Weber DGV,DGV5A,DGAV,DGEV,DPS 32/36	85-9541
Weber IDA 48 (2 barrel)	85-9471
Weber IDF 40,44,48,48MX	85-9776

*85-9988 gaskets are made of reinforced neoprene rubber. All other gaskets listed are AN890 Armstrong paper gasket material.

FILTER WRAPS

PreCharger®

The K&N PreCharger® is a specially designed filter wrap made to extend the service interval of your K&N Air Filter when used in very dusty conditions. They are made from durable polyester material containing uniform micron openings. The PreCharger® will stop small dirt particles; yet add little restriction to the airflow of the filter. The PreCharger® is designed to be run dry and can be cleaned with K&N Filter Cleaner. The PreCharger® is custom made to fit each application. Double stitched elastic openings assure that the PreCharger® will stay in place. The PreChargers® are available in a variety of colors.

DryCharger®

K&N DryChargers® are manufactured from a durable polyester material and are pre-treated with a proprietary hydrophobic process designed to prevent splashes of water or mud from saturating your K&N Air Filter. The DryCharger® will also stop small dirt particles; yet add little restriction to the airflow of the filter. Please be aware the DryCharger® is water repellent, not water proof. Depending on conditions and usage the water repellent treatment is good for 1 to 2 years.

FILTER WRAPS – ROUND STRAIGHT

I.D.	HEIGHT	DESCRIPTION	PART#
2" (51mm)	3" (76mm)	Dry-Black	**62-1300DK**
2.75" (70mm)	2.813" (71mm)	Dry-Black	**E-4142DK**
3" (76mm)	12.5" (318mm)	Dry-Black	**E-3810DK**
3" (76mm)	2.5" (64mm)	Pre-Black	**RU-0150PK**
3" (76mm)	3" (76mm)	Pre-Black	**22-8008PK**
3" (76mm)	4" (102mm)	Pre-Black	**22-8009PK**
3" (76mm)	5" (127mm)	Pre-Black	**RU-0210PK**
3" (76mm)	6" (152mm)	Pre-Black	**22-8010PK**
3.25" (83mm)	7.063" (179mm)	Dry-Black	**E-4510DK**
3.25" (83mm)	2.5" (64mm)	Pre-Black	**22-8007PK**
3.25" (83mm)	3.5" (89mm)	Pre-Black	**AC-3098PK**
3.313" (84mm)	5.5" (140mm)	Pre-Black	**YA-2597PK**
3.5" (89mm)	1.5" (38mm)	Dry-Black	**RC-0170DK**
3.5" (89mm)	4" (102mm)	Pre-Black	**RU-0500PK**
3.5" (89mm)	5" (127mm)	Pre-Black	**RU-0510PK**
3.5" (89mm)	5" (127mm)	Pre-Blue	**RU-0510PL**
3.5" (89mm)	5" (127mm)	Pre-Red	**RU-0510PR**
3.5" (89mm)	5" (127mm)	Pre-Yellow	**RU-0510PY**
3.5" (89mm)	6" (152mm)	Pre-Black	**RU-0520PK**
3.625" (92mm)	9" (229mm)	Pre-Black	**YA-4350PK**
3.875" (98mm)	4.25" (108mm)	Pre-Red	**HA-3098PR**
3.875" (98mm)	4.313" (110mm)	Pre-Red	**HA-2090PR**
3.875" (98mm)	5.875" (149mm)	Pre-Black	**YA-3504PK**
3.938" (100mm)	5.625" (143mm)	Pre-Black	**YA-4001PK**
4" (102mm)	7" (178mm)	Dry-Black	**PL-5006DK**
4" (102mm)	4" (102mm)	Pre-Black	**22-8011PK**
4" (102mm)	4.25" (108mm)	Pre-Black	**PL-1004PK**
4" (102mm)	5" (127mm)	Pre-Black	**RU-1460PK**
4" (102mm)	6" (152mm)	Pre-Black	**RU-1470PK**
4" (102mm)	7" (178mm)	Pre-Black	**PL-1003PK**
4" (102mm)	7" (178mm)	Pre-Black	**RU-1480PK**
4.5" (114mm)	4" (102mm)	Dry-Black	**RB-0900DK**
4.5" (114mm)	3.563" (90mm)	Pre-Blue	**KA-2288PL**
4.5" (114mm)	3.625" (92mm)	Pre-Blue	**KA-4093PL**
4.5" (114mm)	4" (102mm)	Pre-Black	**22-8012PK**
4.5" (114mm)	5" (127mm)	Pre-Black	**22-8013PK**
4.5" (114mm)	6" (152mm)	Pre-Red	**HA-4504PR**
4.625" (117mm)	5" (127mm)	Pre-Red	**HA-3094PR**
4.75" (121mm)	4.625" (117mm)	Pre-Black	**HA-5000PK**
5" (127mm)	5" (127mm)	Dry-Black	**RC-5182DK**
5" (127mm)	5.5" (140mm)	Dry-Black	**CM-4508DK**
5" (127mm)	6.625" (168mm)	Dry-Black	**KA-4508DK**
5" (127mm)	7.25" (184mm)	Dry-Black	**PL-8007DK**
5" (127mm)	3.688" (94mm)	Pre-Yellow	**SU-4250PY**
5" (127mm)	4" (102mm)	Pre-Black	**22-8014PK**
5" (127mm)	5" (127mm)	Pre-Black	**RU-2430PK**
5" (127mm)	6" (152mm)	Pre-Black	**YA-4504PK**
5" (127mm)	7" (178mm)	Pre-Black	**22-8044PK**
5.25" (133mm)	4.75" (121mm)	Dry-Black	**SU-7005DK**
5.25" (133mm)	6.25" (159mm)	Dry-Black	**AC-1012DK**
5.5" (140mm)	2.25" (57mm)	Dry-Black	**E-4665DK**
5.5" (140mm)	5.5" (140mm)	Dry-Black	**KA-7508DK**
5.5" (140mm)	3" (76mm)	Pre-Black	**22-8015PK**
5.5" (140mm)	5" (127mm)	Pre-Black	**22-8016PK**
6" (152mm)	6" (152mm)	Dry-Black	**22-8045DK**
6" (152mm)	1.75" (44mm)	Pre-Black	**E-3211PK**
6" (152mm)	1.75" (44mm)	Pre-Blue	**E-3211PL**
6" (152mm)	1.75" (44mm)	Pre-Red	**E-3211PR**
6" (152mm)	12" (305mm)	Pre-Black	**22-8046PK**
6" (152mm)	2" (51mm)	Pre-Black	**22-8017PK**
6" (152mm)	3.25" (83mm)	Pre-Black	**E-3190PK**
6" (152mm)	3.25" (83mm)	Pre-Blue	**E-3190PL**
6" (152mm)	3.25" (83mm)	Pre-Red	**E-3190PR**
6" (152mm)	3.25" (83mm)	Pre-Yellow	**E-3190PY**
6" (152mm)	3.5" (89mm)	Pre-Black	**22-8018PK**
6.188" (157mm)	7.563" (192mm)	Dry-Black	**E-4710DK**
6.25" (159mm)	1.5" (38mm)	Dry-Black	**RC-3028DK**
6.25" (159mm)	1.5" (38mm)	Dry-Blue	**RC-3028DL**
6.25" (159mm)	1.5" (38mm)	Dry-Red	**RC-3028DR**
6.25" (159mm)	1.5" (38mm)	Dry-Yellow	**RC-3028DY**
7" (178mm)	2" (51mm)	Dry-Black	**E-4521DK**
7" (178mm)	2.25" (57mm)	Dry-Black	**E-4518DK**
7" (178mm)	2" (51mm)	Pre-Black	**E-3360PK**
7" (178mm)	2" (51mm)	Pre-Red	**E-3360PR**
7" (178mm)	2" (51mm)	Pre-Yellow	**E-3360PY**
7" (178mm)	3" (76mm)	Pre-Black	**E-3380PK**
7" (178mm)	3" (76mm)	Pre-Blue	**E-3380PL**
7" (178mm)	3" (76mm)	Pre-Red	**E-3380PR**
7" (178mm)	3" (76mm)	Pre-Black	**RU-0980PK**
7" (178mm)	4" (102mm)	Pre-Black	**22-8019PK**
7" (178mm)	4" (102mm)	Pre-Black	**E-2510PK**
7" (178mm)	4" (102mm)	Pre-Blue	**E-2510PL**
7" (178mm)	4" (102mm)	Pre-Red	**E-2510PR**
7" (178mm)	4" (102mm)	Pre-Yellow	**E-2510PY**
7" (178mm)	5" (127mm)	Pre-Black	**22-8020PK**
7" (178mm)	6" (152mm)	Pre-Black	**22-8021PK**
7" (178mm)	9" (229mm)	Pre-Black	**22-8022PK**
7.5" (191mm)	2.25" (57mm)	Pre-Black	**RK-3901PK**
7.625" (194mm)	10" (254mm)	Dry-Red	**RU-3270DR**
9" (229mm)	2" (51mm)	Pre-Black	**E-3527PK**
9" (229mm)	2" (51mm)	Pre-Blue	**E-3527PL**
9" (229mm)	2" (51mm)	Pre-Red	**E-3527PR**
9" (229mm)	2" (51mm)	Pre-Yellow	**E-3527PY**
9" (229mm)	3" (76mm)	Pre-Black	**E-3530PK**

FILTER WRAPS – ROUND STRAIGHT CONTINUED

I.D.	HEIGHT	DESCRIPTION	PART#
9″ (229mm)	3″ (76mm)	Pre-Blue	**E-3530PL**
9″ (229mm)	3″ (76mm)	Pre-Red	**E-3530PR**
9″ (229mm)	3″ (76mm)	Pre-Yellow	**E-3530PY**
9″ (229mm)	5″ (127mm)	Pre-Black	**E-3650PK**
9″ (229mm)	5″ (127mm)	Pre-Blue	**E-3650PL**
9″ (229mm)	5″ (127mm)	Pre-Red	**E-3650PR**
9″ (229mm)	5″ (127mm)	Pre-Yellow	**E-3650PY**
11″ (279mm)	2″ (51mm)	Pre-Black	**22-8000PK**
11″ (279mm)	3.5″ (89mm)	Pre-Black	**E-1250PK**
11″ (279mm)	3.5″ (89mm)	Pre-Blue	**E-1250PL**
11″ (279mm)	3.5″ (89mm)	Pre-Red	**E-1250PR**
11″ (279mm)	3.5″ (89mm)	Pre-Yellow	**E-1250PY**
11″ (279mm)	4″ (102mm)	Pre-Black	**22-8001PK**
11″ (279mm)	5″ (127mm)	Pre-Black	**E-3680PK**
11″ (279mm)	5″ (127mm)	Pre-Blue	**E-3680PL**
11″ (279mm)	5″ (127mm)	Pre-Red	**E-3680PR**
11″ (279mm)	6″ (152mm)	Pre-Black	**E-3690PK**
11″ (279mm)	6″ (152mm)	Pre-Blue	**E-3690PL**
11″ (279mm)	6″ (152mm)	Pre-Red	**E-3690PR**
11″ (279mm)	6″ (152mm)	Pre-Yellow	**E-3690PY**
11.75″ (298mm)	2.5″ (64mm)	Dry-Black	**E-3016DK**
14″ (356mm)	2.25″ (57mm)	Pre-Black	**22-1422PK**
14″ (356mm)	2.25″ (57mm)	Pre-Blue	**22-1422PL**
14″ (356mm)	2.25″ (57mm)	Pre-Red	**22-1422PR**
14″ (356mm)	2.25″ (57mm)	Pre-Yellow	**22-1422PY**
14″ (356mm)	2.25″ (57mm)	Pre-Black	**E-3740PK**
14″ (356mm)	2.25″ (57mm)	Pre-Blue	**E-3740PL**
14″ (356mm)	2.25″ (57mm)	Pre-Red	**E-3740PR**
14″ (356mm)	2.25″ (57mm)	Pre-Yellow	**E-3740PY**
14″ (356mm)	3″ (76mm)	Pre-Black	**22-1430PK**
14″ (356mm)	3″ (76mm)	Pre-Blue	**22-1430PL**
14″ (356mm)	3″ (76mm)	Pre-Red	**22-1430PR**
14″ (356mm)	3″ (76mm)	Pre-Yellow	**22-1430PY**
14″ (356mm)	3″ (76mm)	Pre-Black	**E-1650PK**
14″ (356mm)	3″ (76mm)	Pre-Blue	**E-1650PL**
14″ (356mm)	3″ (76mm)	Pre-Red	**E-1650PR**
14″ (356mm)	3″ (76mm)	Pre-Yellow	**E-1650PY**
14″ (356mm)	4″ (102mm)	Pre-Black	**22-1440PK**
14″ (356mm)	4″ (102mm)	Pre-Blue	**22-1440PL**
14″ (356mm)	4″ (102mm)	Pre-Red	**22-1440PR**
14″ (356mm)	4″ (102mm)	Pre-Yellow	**22-1440PY**
14″ (356mm)	4″ (102mm)	Pre-Black	**E-3750PK**
14″ (356mm)	4″ (102mm)	Pre-Blue	**E-3750PL**
14″ (356mm)	4″ (102mm)	Pre-Red	**E-3750PR**
14″ (356mm)	4″ (102mm)	Pre-Yellow	**E-3750PY**
14″ (356mm)	5″ (127mm)	Pre-Black	**22-1450PK**
14″ (356mm)	5″ (127mm)	Pre-Blue	**22-1450PL**
14″ (356mm)	5″ (127mm)	Pre-Red	**22-1450PR**
14″ (356mm)	5″ (127mm)	Pre-Yellow	**22-1450PY**
14″ (356mm)	5″ (127mm)	Pre-Black	**E-3760PK**
14″ (356mm)	5″ (127mm)	Pre-Blue	**E-3760PL**
14″ (356mm)	5″ (127mm)	Pre-Red	**E-3760PR**
14″ (356mm)	5″ (127mm)	Pre-Yellow	**E-3760PY**
14″ (356mm)	6″ (152mm)	Pre-Black	**E-3770PK**
14″ (356mm)	6″ (152mm)	Pre-Blue	**E-3770PL**
14″ (356mm)	6″ (152mm)	Pre-Red	**E-3770PR**
14″ (356mm)	6″ (152mm)	Pre-Yellow	**E-3770PY**
16″ (406mm)	2″ (51mm)	Pre-Black	**22-8002PK**
16″ (406mm)	4″ (102mm)	Pre-Black	**22-8004PK**

FILTER WRAPS – ROUND TAPERED

BASE I.D.	TOP I.D.	HEIGHT	DESC.	PART#
2.25″ (57mm)	2″ (51mm)	2.5″ (64mm)	Pre-Black	**RC-2540PK**
2.5″ (64mm)	2″ (51mm)	2.25″ (57mm)	Pre-Black	**RC-0790PK**
3″ (76mm)	2″ (51mm)	3″ (76mm)	Pre-Black	**22-8028PK**
3″ (76mm)	2″ (51mm)	4″ (102mm)	Pre-Black	**22-8048PK**
3.5″ (89mm)	2″ (51mm)	4″ (102mm)	Pre-Black	**RC-1200PK**
3.75″ (95mm)	2″ (51mm)	5″ (127mm)	Pre-Black	**22-8029PK**
3.875″ (98mm)	3.5″ (89mm)	3.813″ (97mm)	Pre-Red	**HA-3500PR**
4″ (102mm)	3.75″ (95mm)	1.5″ (38mm)	Dry-Black	**59-2045DK**
4″ (102mm)	2″ (51mm)	6″ (152mm)	Dry-Black	**22-8030DK**
4.313″ (110mm)	4.25″ (108mm)	5.313″ (135mm)	Pre-Black	**KA-3603PK**
4.375″ (111mm)	4.5″ (114mm)	4.5″ (114mm)	Pre-Red	**HA-2504PR**
4.5″ (114mm)	3.5″ (89mm)	2.5″ (64mm)	Dry-Red	**22-2042PR**
4.5″ (114mm)	3″ (76mm)	4″ (102mm)	Dry-Blue	**22-2040PL**
4.5″ (114mm)	3″ (76mm)	4″ (102mm)	Dry-Red	**22-2040PR**
4.5″ (114mm)	3.5″ (89mm)	4″ (102mm)	Pre-Black	**AC-4096PK**
4.5″ (114mm)	3.5″ (89mm)	5.375″ (137mm)	Pre-Black	**SU-4002PK**
4.5″ (114mm)	4″ (102mm)	6.125″ (156mm)	Pre-Black	**RX-3820PK**
4.5″ (114mm)	4″ (102mm)	6.125″ (156mm)	Pre-Red	**RX-3820PR**
4.5″ (114mm)	4″ (102mm)	6.5″ (165mm)	Pre-Black	**22-8031PK**
4.625″ (117mm)	3.75″ (95mm)	3.438″ (87mm)	Pre-Black	**22-8088PK**
4.625″ (117mm)	3.5″ (89mm)	6.75″ (171mm)	Pre-Black	**YA-3502PK**
4.688″ (119mm)	3.5″ (89mm)	4.875″ (124mm)	Dry-Black	**RC-9350DK**
4.688″ (119mm)	3.5″ (89mm)	4.875″ (124mm)	Dry-Blue	**RC-9350DL**
4.688″ (119mm)	3.5″ (89mm)	4.875″ (124mm)	Dry-Red	**RC-9350DR**
4.688″ (119mm)	3.5″ (89mm)	4.875″ (124mm)	Dry-Yellow	**RC-9350DY**
4.75″ (121mm)	4.5″ (114mm)	4.75″ (121mm)	Dry-Black	**HA-6806DK**
4.75″ (121mm)	3.5″ (89mm)	5.875″ (149mm)	Dry-Black	**RC-9310DK**
4.75″ (121mm)	3.5″ (89mm)	7″ (178mm)	Dry-Black	**RU-3130DK**
4.75″ (121mm)	3.5″ (89mm)	6″ (152mm)	Pre-Red	**HA-4250PR**
5″ (127mm)	4″ (102mm)	6″ (152mm)	Dry-Black	**PL-5207DK**
5″ (127mm)	4″ (102mm)	6″ (152mm)	Dry-Black	**RC-4650DK**
5″ (127mm)	4″ (102mm)	6″ (152mm)	Dry-Blue	**RC-4650DL**
5″ (127mm)	4″ (102mm)	6″ (152mm)	Dry-Red	**RC-4650DR**
5″ (127mm)	4″ (102mm)	6″ (152mm)	Dry-Yellow	**RC-4650DY**
5″ (127mm)	4″ (102mm)	7.875″ (200mm)	Dry-Black	**RC-4690DK**
5″ (127mm)	4″ (102mm)	7.875″ (200mm)	Dry-Blue	**RC-4690DL**
5″ (127mm)	4″ (102mm)	7.875″ (200mm)	Dry-Red	**RC-4690DR**
5″ (127mm)	4″ (102mm)	7.875″ (200mm)	Dry-Yellow	**RC-4690DY**
5″ (127mm)	4.5″ (114mm)	4.5″ (114mm)	Pre-Red	**HA-4400PR**
5″ (127mm)	4″ (102mm)	7″ (178mm)	Pre-Black	**22-8032PK**
5″ (127mm)	4.75″ (121mm)	8″ (203mm)	Pre-Black	**RE-0910PK**
5.125″ (130mm)	3.5″ (89mm)	6″ (152mm)	Dry-Black	**RC-4160DK**
5.125″ (130mm)	4.5″ (114mm)	4.188″ (106mm)	Pre-Red	**HA-3093PR**
5.25″ (133mm)	3″ (76mm)	6″ (152mm)	Dry-Blue	**22-2030PL**
5.25″ (133mm)	3″ (76mm)	6″ (152mm)	Dry-Red	**22-2030PR**
5.375″ (137mm)	4″ (102mm)	5.5″ (140mm)	Dry-Black	**RP-4660DK**
5.375″ (137mm)	4″ (102mm)	5.5″ (140mm)	Dry-Blue	**RP-4660DL**
5.375″ (137mm)	4″ (102mm)	5.5″ (140mm)	Dry-Red	**RP-4660DR**
5.375″ (137mm)	4″ (102mm)	5.5″ (140mm)	Dry-Yellow	**RP-4660DY**
5.375″ (137mm)	4″ (102mm)	6.5″ (165mm)	Dry-Black	**RC-5149DK**
5.375″ (137mm)	4.375″ (111mm)	7″ (178mm)	Dry-Black	**RU-2590DK**
5.375″ (137mm)	4.375″ (111mm)	3.5″ (89mm)	Pre-Red	**HA-2440PR**
5.5″ (140mm)	4.5″ (114mm)	6.5″ (165mm)	Dry-Black	**RC-4630DK**
5.5″ (140mm)	4.5″ (114mm)	6.5″ (165mm)	Dry-Blue	**RC-4630DL**
5.5″ (140mm)	4.5″ (114mm)	6.5″ (165mm)	Dry-Red	**RC-4630DR**
5.5″ (140mm)	4.5″ (114mm)	6.5″ (165mm)	Dry-Yellow	**RC-4630DY**
5.5″ (140mm)	4″ (102mm)	8″ (203mm)	Dry-Black	**RF-1045DK**
5.5″ (140mm)	4″ (102mm)	8″ (203mm)	Dry-Blue	**RF-1045DL**
5.5″ (140mm)	4″ (102mm)	8″ (203mm)	Dry-Red	**RF-1045DR**
5.5″ (140mm)	4″ (102mm)	8″ (203mm)	Dry-Yellow	**RF-1045DY**
5.75″ (146mm)	4.5″ (114mm)	6″ (152mm)	Dry-Black	**RF-1023DK**
5.75″ (146mm)	4.5″ (114mm)	6″ (152mm)	Dry-Blue	**RF-1023DL**

FILTER WRAPS – ROUND TAPERED CONTINUED

BASE I.D.	TOP I.D.	HEIGHT	DESC.	PART#
5.75" (146mm)	4.5" (114mm)	6" (152mm)	Dry-Red	**RF-1023DR**
5.75" (146mm)	3.5" (89mm)	6" (152mm)	Dry-Black	**RF-1035DK**
5.75" (146mm)	3.5" (89mm)	6" (152mm)	Dry-Blue	**RF-1035DL**
5.75" (146mm)	3.5" (89mm)	6" (152mm)	Dry-Red	**RF-1035DR**
5.75" (146mm)	3.5" (89mm)	6" (152mm)	Dry-Yellow	**RF-1035DY**
5.813" (148mm)	4" (102mm)	6" (152mm)	Dry-Black	**RU-5168DK**
5.875" (149mm)	4.938" (125mm)	4" (102mm)	Pre-Yellow	**SU-5098PY**
5.875" (149mm)	5" (127mm)	6" (152mm)	Pre-Black	**RU-3480PK**
6" (152mm)	5" (127mm)	5.563" (141mm)	Dry-Black	**RX-4990DK**
6" (152mm)	5" (127mm)	5.563" (141mm)	Dry-Blue	**RX-4990DL**
6" (152mm)	5" (127mm)	5.563" (141mm)	Dry-Red	**RX-4990DR**
6" (152mm)	5" (127mm)	5.563" (141mm)	Dry-Yellow	**RX-4990DY**
6" (152mm)	5" (127mm)	6.5" (165mm)	Dry-Black	**RX-4730DK**
6" (152mm)	5" (127mm)	6.5" (165mm)	Dry-Blue	**RX-4730DL**
6" (152mm)	5" (127mm)	6.5" (165mm)	Dry-Red	**RX-4730DR**
6" (152mm)	5" (127mm)	6.5" (165mm)	Dry-Yellow	**RX-4730DY**
6" (152mm)	4" (102mm)	6.75" (171mm)	Dry-Black	**RC-4700DK**
6" (152mm)	4" (102mm)	6.75" (171mm)	Dry-Blue	**RC-4700DL**
6" (152mm)	4" (102mm)	6.75" (171mm)	Dry-Red	**RC-4700DR**
6" (152mm)	4" (102mm)	6.75" (171mm)	Dry-Yellow	**RC-4700DY**
6" (152mm)	5" (127mm)	7" (178mm)	Dry-Black	**RC-5100DK**
6" (152mm)	5" (127mm)	7" (178mm)	Dry-Blue	**RC-5100DL**
6" (152mm)	5" (127mm)	7" (178mm)	Dry-Red	**RC-5100DR**
6" (152mm)	5" (127mm)	7" (178mm)	Dry-Yellow	**RC-5100DY**
6" (152mm)	4.5" (114mm)	7" (178mm)	Dry-Black	**RF-1015DK**
6" (152mm)	4.5" (114mm)	7" (178mm)	Dry-Blue	**RF-1015DL**
6" (152mm)	4.5" (114mm)	7" (178mm)	Dry-Red	**RF-1015DR**
6" (152mm)	4.5" (114mm)	7" (178mm)	Dry-Yellow	**RF-1015DY**
6" (152mm)	4.5" (114mm)	8" (203mm)	Dry-Black	**RC-5106DK**
6" (152mm)	4.5" (114mm)	8" (203mm)	Dry-Blue	**RC-5106DL**
6" (152mm)	4.5" (114mm)	8" (203mm)	Dry-Red	**RC-5106DR**
6" (152mm)	4.5" (114mm)	8" (203mm)	Dry-Yellow	**RC-5106DY**
6" (152mm)	4.5" (114mm)	9" (229mm)	Dry-Black	**RC-3690DK**
6" (152mm)	4.5" (114mm)	9" (229mm)	Dry-Blue	**RC-3690DL**
6" (152mm)	4.5" (114mm)	9" (229mm)	Dry-Red	**RC-3690DR**
6" (152mm)	4.5" (114mm)	9" (229mm)	Dry-Yellow	**RC-3690DY**
6" (152mm)	4.625" (117mm)	12" (305mm)	Pre-Black	**22-8034PK**
6" (152mm)	4.625" (117mm)	14" (356mm)	Pre-Black	**22-8035PK**
6" (152mm)	4.625" (117mm)	6" (152mm)	Pre-Black	**22-8033PK**
6" (152mm)	4.625" (117mm)	9" (229mm)	Pre-Black	**RE-0810PK**
6.125" (156mm)	5.125" (130mm)	3.938" (100mm)	Dry-Black	**SU-4506DK**
6.25" (159mm)	5.5" (140mm)	2.125" (54mm)	Dry-Black	**HD-0800DK**
6.25" (159mm)	4.375" (111mm)	4.125" (105mm)	Dry-Black	**RU-5163DK**
6.313" (160mm)	5.438" (138mm)	3" (76mm)	Pre-Black	**SU-4000PK**
6.5" (165mm)	4.5" (114mm)	5.5" (140mm)	Dry-Black	**RU-5147DK**
6.5" (165mm)	4.5" (114mm)	6" (152mm)	Dry-Black	**RC-5060DK**
6.5" (165mm)	4.5" (114mm)	6" (152mm)	Dry-Blue	**RC-5060DL**
6.5" (165mm)	4.5" (114mm)	6" (152mm)	Dry-Red	**RC-5060DR**
6.5" (165mm)	4.5" (114mm)	6" (152mm)	Dry-Yellow	**RC-5060DY**
6.5" (165mm)	5" (127mm)	6.5" (165mm)	Dry-Black	**RF-1037DK**
6.5" (165mm)	5" (127mm)	6.5" (165mm)	Dry-Blue	**RF-1037DL**
6.5" (165mm)	5" (127mm)	6.5" (165mm)	Dry-Red	**RF-1037DR**
6.5" (165mm)	5" (127mm)	6.5" (165mm)	Dry-Yellow	**RF-1037DY**
6.5" (165mm)	4.5" (114mm)	7" (178mm)	Dry-Black	**RF-1032DK**
6.5" (165mm)	4.5" (114mm)	7" (178mm)	Dry-Blue	**RF-1032DL**
6.5" (165mm)	4.5" (114mm)	7" (178mm)	Dry-Red	**RF-1032DR**
6.5" (165mm)	4.5" (114mm)	7" (178mm)	Dry-Yellow	**RF-1032DY**
6.5" (165mm)	4.5" (114mm)	8" (203mm)	Dry-Black	**RF-1027DK**
6.5" (165mm)	4.5" (114mm)	8" (203mm)	Dry-Blue	**RF-1027DL**
6.5" (165mm)	4.5" (114mm)	8" (203mm)	Dry-Red	**RF-1027DR**
6.5" (165mm)	4.5" (114mm)	8" (203mm)	Dry-Yellow	**RF-1027DY**
6.625" (168mm)	5.25" (133mm)	9.5" (241mm)	Dry-Black	**RC-4780DK**
6.625" (168mm)	6.25" (159mm)	9.5" (241mm)	Dry-Blue	**RC-4780DL**
6.625" (168mm)	5.25" (133mm)	9.5" (241mm)	Dry-Red	**RC-4780DR**
6.625" (168mm)	5.25" (133mm)	9.5" (241mm)	Dry-Yellow	**RC-4780DY**
6.75" (171mm)	5.875" (149mm)	9.5" (241mm)	Dry-Black	**RU-5045DK**
7" (178mm)	3.75" (95mm)	1" (25mm)	Dry-Black	**E-2435DK**
7.375" (187mm)	6.625" (168mm)	7.875" (200mm)	Dry-Black	**RC-4900DK**
7.375" (187mm)	6.625" (168mm)	7.875" (200mm)	Dry-Blue	**RC-4900DL**
7.375" (187mm)	6.625" (168mm)	7.875" (200mm)	Dry-Red	**RC-4900DR**
7.375" (187mm)	6.625" (168mm)	7.875" (200mm)	Dry-Yellow	**RC-4900DY**
7.5" (191mm)	7" (178mm)	11" (279mm)	Dry-Black	**RF-1026DK**
7.5" (191mm)	7" (178mm)	11" (279mm)	Dry-Blue	**RF-1026DL**
7.5" (191mm)	7" (178mm)	11" (279mm)	Dry-Red	**RF-1026DR**
7.5" (191mm)	7" (178mm)	18" (457mm)	Dry-Black	**RC-3070DK**
7.5" (191mm)	5.875" (149mm)	3" (76mm)	Dry-Black	**RF-1028DK**
7.5" (191mm)	5.875" (149mm)	3" (76mm)	Dry-Blue	**RF-1028DL**
7.5" (191mm)	5.875" (149mm)	3" (76mm)	Dry-Red	**RF-1028DR**
7.5" (191mm)	5.875" (149mm)	3" (76mm)	Dry-Yellow	**RF-1028DY**
7.5" (191mm)	5" (127mm)	4" (102mm)	Dry-Black	**RF-1009DK**
7.5" (191mm)	5" (127mm)	4" (102mm)	Dry-Blue	**RF-1009DL**
7.5" (191mm)	5" (127mm)	4" (102mm)	Dry-Red	**RF-1009DR**
7.5" (191mm)	5" (127mm)	4" (102mm)	Dry-Yellow	**RF-1009DY**
7.5" (191mm)	5" (127mm)	5" (127mm)	Dry-Black	**22-8049DK**
7.5" (191mm)	5.875" (149mm)	6" (152mm)	Dry-Black	**RC-5173DK**
7.5" (191mm)	5" (127mm)	6" (152mm)	Dry-Black	**RF-1036DK**
7.5" (191mm)	5" (127mm)	6" (152mm)	Dry-Blue	**RF-1036DL**
7.5" (191mm)	5" (127mm)	6" (152mm)	Dry-Yellow	**RF-1036DY**
7.5" (191mm)	4.5" (114mm)	6" (152mm)	Dry-Black	**RF-1048DK**
7.5" (191mm)	4.5" (114mm)	6" (152mm)	Dry-Blue	**RF-1048DL**
7.5" (191mm)	4.5" (114mm)	6" (152mm)	Dry-Red	**RF-1048DR**
7.5" (191mm)	4.5" (114mm)	6" (152mm)	Dry-Yellow	**RF-1048DY**
7.5" (191mm)	4.5" (114mm)	6.5" (165mm)	Dry-Black	**RC-5107DK**
7.5" (191mm)	4.5" (114mm)	6.5" (165mm)	Dry-Blue	**RC-5107DL**
7.5" (191mm)	4.5" (114mm)	6.5" (165mm)	Dry-Red	**RC-5107DR**
7.5" (191mm)	4.5" (114mm)	6.5" (165mm)	Dry-Yellow	**RC-5107DY**
7.5" (191mm)	5.875" (149mm)	6.5" (165mm)	Dry-Black	**RF-1014DK**
7.5" (191mm)	5.875" (149mm)	6.5" (165mm)	Dry-Blue	**RF-1014DL**
7.5" (191mm)	5.875" (149mm)	6.5" (165mm)	Dry-Red	**RF-1014DR**
7.5" (191mm)	5.875" (149mm)	6.5" (165mm)	Dry-Yellow	**RF-1014DY**
7.5" (191mm)	5" (127mm)	6.5" (165mm)	Dry-Black	**RF-1042DK**
7.5" (191mm)	5" (127mm)	6.5" (165mm)	Dry-Blue	**RF-1042DL**
7.5" (191mm)	5" (127mm)	6.5" (165mm)	Dry-Red	**RF-1042DR**
7.5" (191mm)	5" (127mm)	6.5" (165mm)	Dry-Yellow	**RF-1042DY**
7.5" (191mm)	5.125" (130mm)	7" (178mm)	Dry-Black	**RF-1029DK**
7.5" (191mm)	5.125" (130mm)	7" (178mm)	Dry-Blue	**RF-1029DL**
7.5" (191mm)	5.125" (130mm)	7" (178mm)	Dry-Red	**RF-1029DR**
7.5" (191mm)	5.125" (130mm)	7" (178mm)	Dry-Yellow	**RF-1029DY**
7.5" (191mm)	5" (127mm)	7.5" (191mm)	Dry-Black	**RF-1041DK**
7.5" (191mm)	5" (127mm)	7.5" (191mm)	Dry-Blue	**RF-1041DL**
7.5" (191mm)	5" (127mm)	7.5" (191mm)	Dry-Red	**RF-1041DR**
7.5" (191mm)	5" (127mm)	7.5" (191mm)	Dry-Yellow	**RF-1041DY**
7.5" (191mm)	5" (127mm)	8" (203mm)	Dry-Black	**22-8038DK**
7.5" (191mm)	7" (178mm)	8" (203mm)	Dry-Black	**RF-1017DK**
7.5" (191mm)	7" (178mm)	8" (203mm)	Dry-Blue	**RF-1017DL**
7.5" (191mm)	7" (178mm)	8" (203mm)	Dry-Red	**RF-1017DR**
7.5" (191mm)	7" (178mm)	8" (203mm)	Dry-Yellow	**RF-1017DY**
7.5" (191mm)	5" (127mm)	8" (203mm)	Dry-Black	**RF-1020DK**
7.5" (191mm)	5" (127mm)	8" (203mm)	Dry-Red	**RF-1020DR**
7.5" (191mm)	5.875" (149mm)	8.5" (216mm)	Dry-Blue	**RF-1020DL**
7.5" (191mm)	5.875" (149mm)	8.5" (216mm)	Dry-Yellow	**RF-1020DY**
7.5" (191mm)	4.5" (114mm)	9" (229mm)	Dry-Black	**RC-5046DK**
7.5" (191mm)	4.5" (114mm)	9" (229mm)	Dry-Blue	**RC-5046DL**
7.5" (191mm)	4.5" (114mm)	9" (229mm)	Dry-Red	**RC-5046DR**
7.5" (191mm)	4.5" (114mm)	9" (229mm)	Dry-Yellow	**RC-5046DY**
7.5" (191mm)	5" (127mm)	4" (102mm)	Pre-Black	**22-8036PK**
7.5" (191mm)	7" (178mm)	8" (203mm)	Pre-Black	**22-8050PK**
8" (203mm)	6.625" (168mm)	10.5" (267mm)	Dry-Black	**RC-5166DK**
8" (203mm)	7" (178mm)	13" (330mm)	Dry-Black	**RC-5165DK**
8" (203mm)	6.625" (168mm)	8" (203mm)	Dry-Black	**RC-5112DK**
9" (229mm)	6.625" (168mm)	7.5" (191mm)	Dry-Black	**RC-5139DK**

FILTER WRAPS – OVAL TAPERED

BASE" SIDE LENGTH	BASE" SIDE WIDTH	TOP" SIDE LENGTH	TOP" SIDE WIDTH	HEIGHT	DESC.	PART#
3" (76mm)	3.75" (95mm)	3" (76mm)	2" (51mm)	6" (152mm)	Dry-Black	**RC-3680DK**
4" (102mm)	3" (76mm)	3" (76mm)	2" (51mm)	2.75" (70mm)	Dry-Black	**RC-1820DK**
4" (102mm)	3" (76mm)	3.5" (89mm)	2.5" (64mm)	2.75" (70mm)	Dry-Black	**RU-0981DK**
4" (102mm)	3" (76mm)	3" (76mm)	2" (51mm)	4" (102mm)	Dry-Black	**RC-2890DK**
4" (102mm)	3.25" (83mm)	3.5" (89mm)	2.5" (64mm)	7" (178mm)	Dry-Black	**SN-2560DK**
4.5" (114mm)	3.75" (95mm)	3.5" (89mm)	2.5" (64mm)	2.75" (70mm)	Dry-Black	**RU-2780DK**
5.625" (143mm)	4.125" (105mm)	4.5" (114mm)	3.25" (83mm)	2.5" (64mm)	Pre-Blue	**KA-6589PL**
6" (152mm)	3.75" (95mm)	4.25" (108mm)	3.25" (83mm)	5" (127mm)	Pre-Black	**RU-4720PK**
6.25" (159mm)	3.75" (95mm)	4.5" (114mm)	3.5" (89mm)	6.75" (171mm)	Pre-Black	**RU-4710PK**
6.375" (162mm)	4.75" (121mm)	4.5" (114mm)	3.25" (83mm)	2.75" (70mm)	Pre-Black	**YA-2088PK**
6.5" (165mm)	4.5" (114mm)	9" (229mm)	5.5" (140mm)	6.25" (159mm)	Pre-Black	**RD-4200PK**
6.5" (165mm)	4.5" (114mm)	9" (229mm)	5.5" (140mm)	6.25" (159mm)	Pre-Blue	**RD-4200PL**
6.5" (165mm)	4.5" (114mm)	9" (229mm)	5.5" (140mm)	6.25" (159mm)	Pre-Red	**RD-4200PR**
6.5" (165mm)	4.5" (114mm)	9" (229mm)	5.5" (140mm)	6.25" (159mm)	Pre-Yellow	**RD-4200PY**
7" (178mm)	4.5" (114mm)	6.25" (159mm)	4" (102mm)	3" (76mm)	Dry-Blue	**22-2015PL**
7" (178mm)	4.5" (114mm)	6.25" (159mm)	4" (102mm)	3" (76mm)	Dry-Red	**22-2015PR**
7" (178mm)	5.5" (140mm)	5.25" (133mm)	4.25" (108mm)	5" (127mm)	Dry-Black	**RC-70031DK**
7.75" (197mm)	5.5" (140mm)	6.25" (159mm)	4" (102mm)	5" (127mm)	Dry-Black	**RF-1001DK**
7.75" (197mm)	5.5" (140mm)	6.25" (159mm)	4" (102mm)	5" (127mm)	Dry-Blue	**RF-1001DL**
7.75" (197mm)	5.5" (140mm)	6.25" (159mm)	4" (102mm)	5" (127mm)	Dry-Red	**RF-1001DR**
7.75" (197mm)	5.5" (140mm)	6.25" (159mm)	4" (102mm)	5" (127mm)	Dry-Yellow	**RF-1001DY**
8.5" (216mm)	5.25" (133mm)	6.25" (159mm)	4" (102mm)	5.5" (140mm)	Dry-Black	**RC-5040DK**
8.5" (216mm)	5.25" (133mm)	6.25" (159mm)	4" (102mm)	5.5" (140mm)	Dry-Blue	**RC-5040DL**
8.5" (216mm)	5.25" (133mm)	6.25" (159mm)	4" (102mm)	5.5" (140mm)	Dry-Red	**RC-5040DR**
8.5" (216mm)	5.25" (133mm)	6.25" (159mm)	4" (102mm)	5.5" (140mm)	Dry-Yellow	**RC-5040DY**
8.75" (222mm)	5" (127mm)	6.25" (159mm)	4" (102mm)	9" (229mm)	Dry-Black	**RF-1012DK**
8.75" (222mm)	5" (127mm)	6.25" (159mm)	4" (102mm)	9" (229mm)	Dry-Blue	**RF-1012DL**
8.75" (222mm)	5" (127mm)	6.25" (159mm)	4" (102mm)	9" (229mm)	Dry-Red	**RF-1012DR**
8.75" (222mm)	5" (127mm)	6.25" (159mm)	4" (102mm)	9" (229mm)	Dry-Yellow	**RF-1012DY**
9" (229mm)	5.75" (146mm)	7" (178mm)	4.5" (114mm)	7.5" (191mm)	Dry-Black	**RF-1034DK**
9" (229mm)	5.75" (146mm)	7" (178mm)	4.5" (114mm)	7.5" (191mm)	Dry-Blue	**RF-1034DL**
9" (229mm)	5.75" (146mm)	7" (178mm)	4.5" (114mm)	7.5" (191mm)	Dry-Red	**RF-1034DR**
9" (229mm)	5.75" (146mm)	7" (178mm)	4.5" (114mm)	7.5" (191mm)	Dry-Yellow	**RF-1034DY**
9.25" (235mm)	6.25" (159mm)	7" (178mm)	4.5" (114mm)	10" (254mm)	Dry-Black	**RF-1024DK**
9.25" (235mm)	6.25" (159mm)	7" (178mm)	4.5" (114mm)	10" (254mm)	Dry-Blue	**RF-1024DL**
9.25" (235mm)	6.25" (159mm)	7" (178mm)	4.5" (114mm)	10" (254mm)	Dry-Red	**RF-1024DR**
9.25" (235mm)	6.25" (159mm)	7" (178mm)	4.5" (114mm)	10" (254mm)	Dry-Yellow	**RF-1024DY**
9.5" (241mm)	6.75" (171mm)	9" (229mm)	5.5" (140mm)	8.938" (227mm)	Dry-Black	**RC-5102DK**
9.5" (241mm)	6.75" (171mm)	9" (229mm)	5.5" (140mm)	8.938" (227mm)	Dry-Blue	**RC-5102DL**
9.5" (241mm)	6.75" (171mm)	9" (229mm)	5.5" (140mm)	8.938" (227mm)	Dry-Red	**RC-5102DR**
9.5" (241mm)	6.75" (171mm)	9" (229mm)	5.5" (140mm)	8.938" (227mm)	Dry-Yellow	**RC-5102DY**
12" (305mm)	6" (152mm)	9.938" (252mm)	3.938" (100mm)	7" (178mm)	Dry-Black	**RP-5103DK**
12" (305mm)	6" (152mm)	9.938" (252mm)	3.938" (100mm)	7" (178mm)	Dry-Blue	**RP-5103DL**
12" (305mm)	6" (152mm)	9.938" (252mm)	3.938" (100mm)	7" (178mm)	Dry-Red	**RP-5103DR**
12" (305mm)	6" (152mm)	9.938" (252mm)	3.938" (100mm)	7" (178mm)	Dry-Yellow	**RP-5103DY**
18.75" (476mm)	5" (127mm)	16.75" (425mm)	3" (76mm)	4.813" (122mm)	Dry-Black	**RP-5135DK**

FILTER WRAPS – RECTANGLE STRAIGHT

LENGTH	WIDTH	HEIGHT	DESC.	PART#
6.75" (171mm)	4.5" (114mm)	1.5" (38mm)	Pre-Black	**22-8039PK**
6.75" (171mm)	4.5" (114mm)	2.5" (64mm)	Pre-Black	**22-8040PK**
6.75" (171mm)	4.5" (114mm)	3" (76mm)	Pre-Black	**22-8041PK**
6.75" (171mm)	4.5" (114mm)	4" (102mm)	Pre-Black	**22-8042PK**
7.5" (191mm)	6.125" (156mm)	1.75" (44mm)	Pre-Black	**E-3960PK**
7.5" (191mm)	6.125" (156mm)	1.75" (44mm)	Pre-Blue	**E-3960PL**
7.5" (191mm)	6.125" (156mm)	1.75" (44mm)	Pre-Red	**E-3960PR**
7.5" (191mm)	6.125" (156mm)	1.75" (44mm)	Pre-Yellow	**E-3960PY**
9.125" (232mm)	6.75" (171mm)	6.5" (165mm)	Pre-Black	**100-8569PK**
9.125" (232mm)	6.75" (171mm)	6.5" (165mm)	Pre-Red	**100-8569PR**
9.125" (232mm)	6.75" (171mm)	6.5" (165mm)	Pre-Yellow	**100-8569PY**
19" (483mm)	14" (356mm)	4.5" (114mm)	Dry-Black	**100-8592DK**
19" (483mm)	7" (178mm)	5.375" (137mm)	Pre-Black	**100-8576PK**
19" (483mm)	14" (356mm)	6.5" (165mm)	Pre-Black	**100-8562PK**
19" (483mm)	7" (178mm)	7.5" (191mm)	Pre-Black	**100-8570PK**
19" (483mm)	7" (178mm)	7.5" (191mm)	Pre-Red	**100-8570PR**
19" (483mm)	7" (178mm)	7.5" (191mm)	Pre-Yellow	**100-8570PY**
24" (610mm)	18" (457mm)	10" (254mm)	Pre-Blue	**100-8562PL**
24" (610mm)	18" (457mm)	10" (254mm)	Pre-Red	**100-8562PR**
24" (610mm)	18" (457mm)	10" (254mm)	Pre-Yellow	**100-8562PY**

FILTER WRAPS – OVAL STRAIGHT

INSIDE LENGTH	INSIDE WIDTH	HEIGHT	DESC.	PART#
4″ (102mm)	3″ (76mm)	2″ (51mm)	Dry-Black	**E-4515DK**
4″ (102mm)	3″ (76mm)	2.75″ (70mm)	Dry-Black	**E-4516DK**
4.5″ (114mm)	3.75″ (95mm)	6″ (152mm)	Pre-Black	**RU-1230PK**
4.5″ (114mm)	3.75″ (95mm)	7″ (178mm)	Pre-Black	**RU-1240PK**
4.5″ (114mm)	3.75″ (95mm)	9″ (229mm)	Pre-Black	**RU-1260PK**
6.5″ (165mm)	4.625″ (117mm)	7.875″ (200mm)	Dry-Black	**YA-7008DK**
6.625″ (168mm)	4.625″ (117mm)	2.875″ (73mm)	Pre-Yellow	**SU-6590PY**
6.625″ (168mm)	3.813″ (97mm)	3.438″ (87mm)	Pre-Black	**PL-1002PK**
7″ (178mm)	4.5″ (114mm)	2″ (51mm)	Dry-Blue	**22-2000PL**
7″ (178mm)	4.5″ (114mm)	2″ (51mm)	Dry-Red	**22-2000PR**
7″ (178mm)	4.5″ (114mm)	3″ (76mm)	Dry-Blue	**22-2020PL**
7″ (178mm)	4.5″ (114mm)	3″ (76mm)	Dry-Red	**22-2020PR**
7″ (178mm)	4.5″ (114mm)	2″ (51mm)	Pre-Black	**E-3321PK**
7″ (178mm)	4.5″ (114mm)	2″ (51mm)	Pre-Blue	**E-3321PL**
7″ (178mm)	4.5″ (114mm)	2″ (51mm)	Pre-Red	**E-3321PR**
7″ (178mm)	4.5″ (114mm)	2″ (51mm)	Pre-Yellow	**E-3321PY**
7″ (178mm)	4.5″ (114mm)	2.25″ (57mm)	Pre-Black	**RK-3902PK**
7″ (178mm)	4.5″ (114mm)	3.5″ (89mm)	Pre-Black	**E-3341PK**
7″ (178mm)	4.5″ (114mm)	3.5″ (89mm)	Pre-Blue	**E-3341PL**
7″ (178mm)	4.5″ (114mm)	3.5″ (89mm)	Pre-Red	**E-3341PR**
7″ (178mm)	4.5″ (114mm)	3.5″ (89mm)	Pre-Yellow	**E-3341PY**
7.375″ (187mm)	4″ (102mm)	2.063″ (52mm)	Pre-Red	**HA-1312PR**
7.375″ (187mm)	4″ (102mm)	2.563″ (65mm)	Pre-Red	**HA-1315PR**

INSIDE LENGTH	INSIDE WIDTH	HEIGHT	DESC.	PART#
7.5″ (191mm)	5.5″ (140mm)	4.75″ (121mm)	Dry-Black	**KA-7408DK**
7.75″ (197mm)	4.75″ (121mm)	2.5″ (64mm)	Pre-Red	**HA-6592PR**
7.75″ (197mm)	5.875″ (149mm)	5.063″ (129mm)	Pre-Black	**KA-7504PK**
9″ (229mm)	5.5″ (140mm)	2.5″ (64mm)	Dry-Blue	**22-2840PL**
9″ (229mm)	5.5″ (140mm)	2.5″ (64mm)	Dry-Red	**22-2840PR**
9″ (229mm)	5.5″ (140mm)	2″ (51mm)	Pre-Black	**E-3441PK**
9″ (229mm)	5.5″ (140mm)	2″ (51mm)	Pre-Blue	**E-3441PL**
9″ (229mm)	5.5″ (140mm)	2″ (51mm)	Pre-Red	**E-3441PR**
9″ (229mm)	5.5″ (140mm)	2″ (51mm)	Pre-Yellow	**E-3441PY**
9″ (229mm)	5.5″ (140mm)	3.5″ (89mm)	Pre-Black	**E-3461PK**
9″ (229mm)	5.5″ (140mm)	3.5″ (89mm)	Pre-Red	**E-3461PR**
9″ (229mm)	5.5″ (140mm)	3.5″ (89mm)	Pre-Yellow	**E-3461PY**
9″ (229mm)	5.5″ (140mm)	6″ (152mm)	Pre-Black	**E-3491PK**
9″ (229mm)	5.5″ (140mm)	6″ (152mm)	Pre-Blue	**E-3491PL**
9″ (229mm)	5.5″ (140mm)	6″ (152mm)	Pre-Red	**E-3491PR**
9″ (229mm)	5.5″ (140mm)	6″ (152mm)	Pre-Yellow	**E-3491PY**
9″ (229mm)	5.5″ (140mm)	6.5″ (165mm)	Pre-Black	**RD-5000PK**
9″ (229mm)	5.5″ (140mm)	6.5″ (165mm)	Pre-Blue	**RD-5000PL**
9″ (229mm)	5.5″ (140mm)	6.5″ (165mm)	Pre-Red	**RD-5000PR**
9.5″ (241mm)	8.375″ (213mm)	2.125″ (54mm)	Dry-Black	**E-3495PK**
12″ (305mm)	5.5″ (140mm)	3.5″ (89mm)	Pre-Black	**E-3671PK**
12″ (305mm)	5.5″ (140mm)	3.5″ (89mm)	Pre-Red	**E-3671PR**
12″ (305mm)	5.5″ (140mm)	6″ (152mm)	Pre-Black	**22-8027PK**

FILTER WRAPS – ROUND REVERSE TAPERED

BASE I.D.	TOP I.D.	HEIGHT	DESC.	PART#
3.375″ (86mm)	3.5″ (89mm)	4.125″ (105mm)	Pre-Black	**SU-2504PK**
3.813″ (97mm)	3.875″ (98mm)	8.125″ (206mm)	Pre-Black	**YA-6504PK**
4.5″ (114mm)	6″ (152mm)	6.125″ (156mm)	Dry-Black	**RX-3810DK**

BASE I.D.	TOP I.D.	HEIGHT	DESC.	PART#
4.5″ (114mm)	6″ (152mm)	6.125″ (156mm)	Dry-Black	**RX-3810DK**
4.5″ (114mm)	6″ (152mm)	6.125″ (156mm)	Dry-Red	**RX-3810DR**
6.25″ (159mm)	7″ (178mm)	3.625″ (92mm)	Dry-Black	**HD-0700DK**

FILTER WRAPS – UNIQUE

DESCRIPTION	PART#
Dry-Black	**SU-6596DK**
Dry-Black	**HA-2591DK**
Dry-Black	**HA-4503DK**
Dry-Black	**KA-4408DK**
Pre-Black	**KA-6503PK**

DESCRIPTION	PART#
Dry-Black	**KT-5201DK**
Dry-Black	**RC-5052DK**
Dry-Black	**YA-4098-1DK**
Dry-Black	**YA-4503DK**
Dry-Black	**YA-6601DK**

FILTER WRAPS – UNIVERSAL

LENGTH	WIDTH	DESC.	PART#
7″ (178mm)	7″ (178mm)	Dry-Black	**SU-4002-TDK**
7.125″ (181mm)	7.125″ (181mm)	Dry-Black	**YA-4504-TDK**
8.25″ (210mm)	6.75″ (171mm)	Dry-Black	**HA-4099-TDK**
8.25″ (210mm)	6.75″ (171mm)	Pre-Black	**HA-4099-TPK**

LENGTH	WIDTH	DESC.	PART#
9.75″ (248mm)	5.75″ (146mm)	Dry-Black	**YA-3502-TDK**
9.875″ (251mm)	7.125″ (181mm)	Dry-Black	**HA-4504-TDK**
10.25″ (260mm)	6.875″ (175mm)	Dry-Black	**YA-6601-TDK**

Developed for only the dustiest of conditions, the K&N Pre-cleaner is a specially designed foam filter wrap made to extend the service interval of your K&N Air Filter. Made from large, open cell foam, the Pre-cleaner will trap dust and dirt, yet add only a small amount of restriction to the airflow of your filter.

- **Custom made to fit specific applications**
- **Also sold in universal cut-to-fit sizes**
- **Red Pre-cleaners are designed to be used with foam filter oil (purchased locally), Pre-cleaners must be cleaned with K&N cleaner or soap and water**

Round Straight

DESCRIPTION	I.D.	HEIGHT	PART#
Pre-Cleaner-Red	4.5" (114 mm)	1.5" (38 mm)	**25-0330**
Pre-Cleaner-Red	3" (76 mm)	2.5" (64 mm)	**25-1480**
Pre-Cleaner-Red	3.75" (95 mm)	6" (152 mm)	**25-1770**
Pre-Cleaner-Red	14" (356 mm)	4" (102 mm)	**25-3750**
Pre-Cleaner-Red	14" (356 mm)	5" (127 mm)	**25-3760**
Pre-Cleaner-Red	14" (356 mm)	6" (152 mm)	**25-3770**
Pre-Cleaner-Charcoal-Dry	14" (356 mm)	4" (102 mm)	**25-5500**
Pre-Cleaner-Charcoal-Dry	14" (356 mm)	5" (127 mm)	**25-5600**
Pre-Cleaner-Charcoal-Dry	14" (356 mm)	6" (152 mm)	**25-5700**
Pre-Cleaner-Charcoal-Dry	16" (406 mm)	3" (76 mm)	**25-5200**
Pre-Cleaner-Charcoal-Dry	16" (406 mm)	4" (102 mm)	**25-5300**
Pre-Cleaner-Charcoal-Dry	16" (406 mm)	5" (127 mm)	**25-5400**

25-3770

Round Tapered

DESCRIPTION	BASE I.D.	TOP I.D.	HEIGHT	PART#
Pre-Cleaner-Yellow	3.125" (79 mm)	3" (76 mm)	3.375" (86 mm)	**25-2588**
Pre-Cleaner-Red	6" (152 mm)	5" (127 mm)	14" (356 mm)	**25-0880**
Pre-Cleaner-Red	6" (152 mm)	5" (127 mm)	9" (229 mm)	**25-0810**
Pre-Cleaner-Red	7" (178 mm)	4.5" (114 mm)	4.875" (124 mm)	**25-6601**
Pre-Cleaner-Charcoal-Dry	8" (203 mm)	6.625" (168 mm)	12" (305 mm)	**25-5166**

25-5166

Oval Straight

DESCRIPTION	INSIDE LENGTH	INSIDE WIDTH	HEIGHT	PART#
Pre-Cleaner-Red	4.5" (114 mm)	3.25" (83 mm)	1.5" (38 mm)	**25-4250**
Pre-Cleaner-Red	5.5" (140 mm)	4.25" (108 mm)	2" (51 mm)	**25-1691**
Pre-Cleaner-Red	7" (178 mm)	4.5" (114 mm)	3.25" (83 mm)	**25-3340**
Pre-Cleaner-Red	7" (178 mm)	4.5" (114 mm)	6" (152 mm)	**25-3346**
Pre-Cleaner-Red	9" (229 mm)	5.5" (140 mm)	3.25" (83 mm)	**25-3460**
Pre-Cleaner-Red	9" (229 mm)	5.5" (140 mm)	6" (152 mm)	**25-3490**
Pre-Cleaner-Red	20" (508 mm)	9" (229 mm)	3" (76 mm)	**25-1963**
Pre-Cleaner-Red	20" (508 mm)	9" (229 mm)	4.5" (114 mm)	**25-1964**
Pre-Cleaner-Red	20" (508 mm)	9" (229 mm)	6" (152 mm)	**25-1966**

25-1966

Oval Tapered

DESCRIPTION	BASE"SIDE LENGTH	BASE"SIDE WIDTH	TOP"SIDE LENGTH	TOP"SIDE WIDTH	HEIGHT	PART#
Pre-Cleaner-Red	3.25" (83 mm)	4.5" (114 mm)	3" (76 mm)	2" (51 mm)	4" (102 mm)	**25-2391**

Universal

DESCRIPTION	WIDTH	LENGTH	PART#
Pre-Cleaner-Red	7" (178 mm)	48" (1219 mm)	**25-3900**
Pre-Cleaner-Red	18" (457 mm)	48" (1219 mm)	**25-3918**
Pre-Cleaner-Red	24" (610 mm)	48" (1219 mm)	**25-3924**
Pre-Cleaner-Red	30" (762 mm)	48" (1219 mm)	**25-3930**

25-3900

Intake System Spare Filters and Wraps

Intake System	Spare Filter	Filter Wrap
57-1000	RC-4690	RC-4690DK
57-1001	RC-4630	RC-4630DK
57-1002	RU-4730	RX-4730DK
57-1003	RF-1032	RF-1032DK
57-1500-1	RF-1001	RF-1024DK
57-1501	E-3742	E-1650PK
57-1502	E-1650	E-1650PK
57-1503-1	E-3740	E-3740PK
57-1506-2	RF-1027	RF-1027DK
57-1507	RF-1027	RF-1027DK
57-1508	RF-1033	
57-1509-1	RC-4680	RF-1032DK
57-1511-2	RC-4680	RF-1032DK
57-1512	RF-1039	RC-4160DK
57-1513-1	RF-1045	RF-1045DK
57-1514-1	RF-1045	RF-1045DK
57-1515-1	RP-4660	RP-4660DK
57-1516	RC-5040	RC-5040DK
57-1517-2	RC-4680	RF-1032DK
57-1518	RC-4690	RC-4690DK
57-1519	RC-4690	RC-4690DK
57-1520	RC-4690	RC-4690DK
57-1521	RC-4630	RC-4630DK
57-1522	RX-4730	RX-4730DL
57-1523	RX-4730	RX-4730DL
57-1524	RX-4990	RX-4990DK
57-1525	RC-4780	RC-4780DK
57-1526	RC-4700	RC-4700DK
57-1527-1	RC-4680	RF-1032DK
57-1528	RC-5060	RC-5060DK
57-1529	RF-1040	RF-1034DK
57-1530-1	RF-1020	RF-1020DK
57-1531	RP-4660	RP-4660DK
57-1532	RC-4780	RC-4780DK
57-1533	RF-1040	RF-1034DK
57-1534	RU-5141	RP-4660DK
57-1535	RP-4660	RP-4660DK
57-1536	RX-2820	22-8044PK
57-1537	RF-1040	RF-1034DK
57-1538	RC-5138	22-8049DK
57-1539	RC-5138	22-8049DK
57-1540	RF-1048	RF-1048DK
57-1541	RF-1024	RF-1024DK
57-1542	RF-1042	RF-1042DK
57-1543	RF-1048	RF-1048DK
57-1544	RF-1048	RF-1048DK
57-1545	RF-1048	RF-1048DK
57-1546	RF-1048	RF-1048DK
57-1547	RF-1048	RF-1048DK
57-1548	RF-1048	RF-1048DK
57-1549	RF-1048	RF-1048DK
57-1550	RP-4660	RP-4660DK
57-1551	RP-4660	RP-4660DK
57-1552	RU-4730	RX-4730DK
57-1553	RF-1048	RF-1048DK
57-1554	RF-1041	RF-1041DK
57-1555	RF-1042	RF-1042DK
57-1556	RF-1042	RF-1042DK
57-1557	RC-5142	RC-5112DK
57-1558	RF-1048	RF-1048DK
57-1559	RF-1048	RF-1048DK
57-1560	RU-3570	RX-4990DK

Intake System	Spare Filter	Filter Wrap
57-2500	RF-1028	RF-1028DK
57-2501	RF-1003	
57-2502	RF-1004	
57-2503	RF-1012	RF-1012DK
57-2505-1	RF-1016	RC-5100DK
57-2507	RF-1025	RC-5106DK
57-2510-1	RF-1017	RF-1017DK
57-2511	RF-1014	RF-1014DK
57-2513-1	RF-1014	RF-1014DK
57-2514-4	RF-1020	RF-1020DK
57-2516	RF-1026	RF-1026DK
57-2517	RF-1003	
57-2519-3	RF-1036	RF-1036DK
57-2523-2	RF-1048	RF-1048DK
57-2524-2	RF-1044	RF-1020DK
57-2525-2	RF-1044	RF-1020DK
57-2526-2	RP-4740	RF-1023DK
57-2527	RF-1048	RF-1048DK
57-2528	RF-1048	RF-1048DK
57-2529-1	RF-1048	RF-1048DK
57-2530	RC-4780	RC-4780DK
57-2531	RC-4780	RC-4780DK
57-2532	RC-4940	RC-5173DK
57-2533	RX-4730	RX-4730DL
57-2534	RX-4730	RX-4730DL
57-2535	RF-1037	RF-1037DK
57-2536	RF-1048	RF-1048DK
57-2537	RF-1048	RF-1048DK
57-2538	RF-1020	RF-1020DK
57-2539	RF-1048	RF-1048DK
57-2540	RF-1037	RF-1037DK
57-2541	RC-5046	RC-5046DK
57-2542	RC-3690	RC-3690DK
57-2543	RF-1041	RF-1041DK
57-2544	RF-1041	RF-1041DK
57-2545	RC-5046	RC-5046DK
57-2546-1	RC-5178	
57-2547	RP-5101	RU-5168DK
57-2548	RC-5046	RC-5046DK
57-2549	RC-5046	RC-5046DK
57-2550	RC-5046	RC-5046DK
57-2551	RF-1020	RF-1020DK
57-2552	RF-1037	RF-1037DK
57-2553	RF-1041	RF-1041DK
57-2554	RF-1037	RF-1037DK
57-2555	RF-1041	RF-1041DK
57-2556	RF-1020	RF-1020DK
57-2557	RF-1020	RF-1020DK
57-2558	RC-5046	RC-5046DK
57-2559	RX-4990	RX-4990DK
57-2560	RX-4860	RX-4730DK
57-2561	RU-4990	RX-4990DK
57-2562	RC-4630	RC-4630DK
57-2563	RF-1041	RF-1041DK
57-2564	RF-1048	RF-1048DK
57-2565	RF-1048	RF-1048DK
57-2566	RF-1048	RF-1048DK
57-2567	RC-5046	RC-5046DK
57-2568	RF-1020	RF-1020DK
57-2569	RF-1041	RF-1041DK
57-2570	RC-5046	RC-5046DK
57-2571	RF-1048	RF-1048DK

Intake System	Spare Filter	Filter Wrap
57-2572	RC-5046	RC-5046DK
57-2573	RF-1048	RF-1048DK
57-2574	RF-1041	RF-1041DK
57-2575	RC-5173	RC-5173DK
57-2576	RU-5172	RC-5139DK
57-3000	RC-5179	RC-5139DK
57-3009	RF-1023	RF-1023DK
57-3010-1	RF-1015	RF-1015DK
57-3011	RF-1021	
57-3012	RF-1018	
57-3013-2	RF-1024	RF-1024DK
57-3014	E-3750	E-3750PK
57-3016-1	RF-1040	RF-1034DK
57-3017-2	RF-1035	RF-1035DK
57-3020	RF-1038	
57-3021-1	RF-1041	RF-1041DK
57-3022-2	RF-1050	
57-3023-1	RF-1042	RF-1042DK
57-3024	RC-4650	RC-4650DK
57-3025-1	RC-4650	RC-4650DK
57-3026	RF-1032	RF-1032DK
57-3027	RF-1032	RF-1032DK
57-3028	E-1240	
57-3029	E-1230	
57-3030-1	RF-1041	RF-1041DK
57-3031-1	RF-1041	RF-1041DK
57-3032	RF-1041	RF-1041DK
57-3033	RF-1041	RF-1041DK
57-3034	RC-4900	RC-4900DK
57-3035	RP-5070	
57-3036	RC-4630	RC-4630DK
57-3037	RP-5103	RP-5103DK
57-3038	RF-1041	RF-1041DK
57-3039	RF-1040	RF-1034DK
57-3040	RF-1048	RF-1048DK
57-3041	RP-5105	
57-3042	RF-1048	RF-1048DK
57-3043	RF-1048	RF-1048DK
57-3044	RF-1048	RF-1048DK
57-3045	RF-1040	RF-1034DK
57-3046	RP-5115	
57-3047	RC-4900	RC-4900DK
57-3048	RF-1032	RF-1032DK
57-3049	RF-1048	RF-1048DK
57-3050	RF-1041	RF-1041DK
57-3051	RF-1048	RF-1048DK
57-3052	RP-5135	RP-5135DK
57-3053	RF-1048	RF-1048DK
57-3054	RC-2960	22-8049DK
57-3055	RP-5115	
57-3056	RC-5149	RC-5149DK
57-3057	RC-5179	RC-5139DK
57-3058	RF-1042	RF-1042DK
57-3061	RF-1032	RF-1032DK
57-3062	RU-4730	RX-4730DK
57-3063	RF-1042	RF-1042DK
57-3066	RC-5179	RC-5139DK
57-3067	RF-1042	RF-1042DK
57-3500	RF-1007	
57-3501	RF-1005	
57-3502	RC-2960	22-8049DK
57-3503	RF-1007	

Filter Wrap Suffix K = Black, L = Blue, R=Red, Y=Yellow

Visit knfilters.com® to see available colors

Intake System Spare Filters and Wraps

Intake System	Spare Filter	Filter Wrap
57-3504	RF-1008	RC-5106DK
57-3506	RF-1013	RF-1036DK
57-3509	RF-1030	RC-4630DK
57-3512	RC-4550	RF-1023DK
57-3513	RP-4970	22-8032PK
57-3514	RP-4980	RC-5149DK
57-3515	RC-4760	RC-5106DK
57-5001	RF-1009	RF-1009DK
57-5005	RF-1002	
57-5500	RF-1022	
57-5504-1	RF-1019	
57-5505	RF-1001	RF-1024DK
57-6000	RC-2960	22-8049DK
57-6001	RF-1010	
57-6002	RF-1011	
57-6003	RC-2960	22-8049DK
57-6005	RX-4750	RF-1042DK
57-6010	RF-1037	RF-1037DK
57-6011	RF-1037	RF-1037DK
57-6012	RF-1044	RF-1020DK
57-6013	RF-1037	RF-1037DK
57-6014	RF-1014	RF-1014DK
57-6015	RC-4180	22-8033PK
57-7000	RP-4630	RC-4630DK
57-7001	RP-5167	RF-1037DK
57-9000	RF-1002	
57-9001	RF-1009	RF-1009DK
57-9004	RC-2960	22-8049DK
57-9005	RC-2960	22-8049DK
57-9006	RF-1009	RF-1009DK
57-9008	RF-1009	RF-1009DK
57-9011	RC-4630	RC-4630DK
57-9012	RF-1037	RF-1037DK
57-9013	RF-1029	RF-1029DK
57-9014-1	RF-1045	RF-1045DK
57-9015-1	RC-4700	RC-4700DK
57-9016-1	RF-1037	RF-1037DK
57-9017	RF-1045	RF-1045DK
57-9018	RP-4980	RC-5149DK
57-9019	RC-4700	RC-4700DK
57-9020	RC-5100	RC-5100DK
57-9021	RC-5100	RC-5100DK
57-9024	RF-1029	RF-1029DK
57-9027	E-3034	
63-1007-1	E-3750	E-3750PK
63-1008	RF-1014	RF-1014DK
63-1014	RF-1012	RF-1012DK
63-1016	RF-1030	RC-4630DK
63-1017	RF-1030	RC-4630DK
63-1019	RC-4400	
63-1043	RC-4700	RC-4700DK
63-1050	RP-5070	
63-1058	RC-5100	RC-5100DK
63-1094	RC-5138	22-8049DK
63-1101	RX-4990	RX-4990DK
63-1108	RU-4990	RX-4990DK
63-1114	RF-1042	RF-1042DK
63-1529	RF-1040	RF-1034DK
63-1534	RU-5121	RP-4660DK
63-1537	RF-1040	RF-1034DK
63-1549	RF-1048	RF-1048DK
63-1550	RP-4660	RP-4660DK

Intake System	Spare Filter	Filter Wrap
63-1551	RP-4660	RP-4660DK
63-1552	RU-4730	RX-4730DK
63-1553	RF-1048	RF-1048DK
63-1555	RF-1042	RF-1042DK
63-1556	RF-1042	RF-1042DK
63-1559	RF-1048	RF-1048DK
63-1560	RU-3570	RX-4990DK
63-1561	RF-1044	RF-1020DK
63-1562	RC-5283	RC-5112DK
63-1563	RF-1041	RF-1041DK
63-1564	RF-1042	RF-1042DK
63-1565	RF-1042	RF-1042DK
63-1566	RF-1048	RF-1048DK
63-2565	RF-1048	RF-1048DK
63-2572	RC-5046	RC-5046DK
63-2575	RC-5173	RC-5173DK
63-2577	RC-4381	RF-1036DK
63-2578	RF-1048	RF-1048DK
63-2579	RF-1044	RF-1020DK
63-2580	RC-5173	RC-5173DK
63-2581	RC-5173	RC-5173DK
63-2582	RC-5282	
63-2583	RC-5173	RC-5173DK
63-2584	RC-5173	RC-5173DK
63-3030	RF-1041	RF-1041DK
63-3037	RP-5103	RP-5103DK
63-3052	RP-5135	RP-5135DK
63-3053	RF-1048	RF-1048DK
63-3056	RC-5149	RC-5149DK
63-3059	RF-1048	RF-1048DK
63-3060-1	RP-5161	RP-5135DK
63-3062	RU-4730	RX-4730DK
63-3064-1	RF-1048	RF-1048DK
63-3065	RF-1048	RF-1048DK
63-3067	RF-1042	RF-1042DK
63-3068	RC-2960	22-8049DK
63-3069	E-1989	RX-3820PK
63-3070	RF-1042	RF-1042DK
63-3071	RC-5138	22-8049DK
63-3072	RC-5138	22-8049DK
63-3073	RP-5161	RP-5135DK
63-3074	RF-1042	RF-1042DK
63-3075	RF-1042	RF-1042DK
63-3077	RC-5179	RC-5139DK
63-3078	RC-5107	RC-5107DK
63-3080	RP-5161	RP-5135DK
63-3514	RP-4980	RC-5149DK
63-6012	RF-1044	RF-1020DK
63-6014	RF-1014	RF-1014DK
63-6015	RC-4180	22-8033PK
63-7001	RP-5167	RF-1037DK
63-9022	RC-5100	RC-5100DK
63-9023	RC-5100	RC-5100DK
63-9025	RF-1042	RF-1042DK
63-9026	RF-1042	RF-1042DK
63-9027	RF-1042	RF-1042DK
63-9028	RF-1042	RF-1042DK
63-9029	RF-1048	RF-1048DK
63-9030	RC-5046	RC-5046DK
63-9031-1	RF-1042	RF-1042DK
63-9032-1	RF-1041	RF-1041DK
63-9033	RF-1020	RF-1020DK

Intake System	Spare Filter	Filter Wrap
63-9034	RF-1044XD	RF-1020DR
63-9035	RF-1042XD	RF-1042DK
63-9036	RF-1044	RF-1020DK
69-0015TR	RU-4870	RX-4730DK
69-0015TS	RU-4870	RX-4730DK
69-0017TS	RX-4730	RX-4730DL
69-0021TB	RU-4870	RX-4730DK
69-0021TS	RU-4870	RX-4730DK
69-0025TP	RU-4870	RX-4730DK
69-0026TS	RC-4630XD	RC-4630DK
69-0500TS	RU-4950	RX-4990DK
69-0500TWR	RU-4950	RX-4990DK
69-0502TWR	RU-4860	RX-4730DK
69-1005TB	RC-4290	
69-1005TR	RC-4290	
69-1007TS	RU-4950	RX-4990DK
69-1008TB	RU-4950	RX-4990DK
69-1008TS	RU-4950	RX-4990DK
69-1009TP	RU-4870	RX-4730DK
69-1009TR	RU-4870	RX-4730DK
69-1009TWR	RU-4870	RX-4730DK
69-1010TP	RU-4870	RX-4730DK
69-1011TP	RU-4860	RX-4730DK
69-1013TS	RU-4950	RX-4990DK
69-1014TS	RU-5147	RU-5147DK
69-1015TB	RU-4960	RX-4990DK
69-1015TP	RU-4960	RX-4990DK
69-1016-1TS	RU-5163	RU-5163DK
69-1017TTK	RC-9630	RC-9350DK
69-1018TS	RX-4950	RX-4990DK
69-1019TS	RU-4600	22-8036PK
69-1040TP	RU-4990	RX-4990DK
69-1040TWR	RU-4990	RX-4990DK
69-1203TP	RU-4950	RX-4990DK
69-1206TP	RU-4870	RX-4730DK
69-1207TP	RU-4960	RX-4990DK
69-1207TR	RU-4960	RX-4990DK
69-1208TS	RU-4950	RX-4990DK
69-1209TS	RU-4870	RX-4730DK
69-1210TS	RC-4630	RC-4630DK
69-1211TTK	RU-3570	RX-4990DK
69-1302TP	RU-4870	RX-4730DK
69-1500TP	RC-9310	RC-9310DK
69-1500TWR	RC-9310	RC-9310DK
69-1502TP	RU-4950	RX-4990DK
69-1502TS	RU-4950	RX-4990DK
69-2001TS	RP-5113	RU-5147DK
69-2001TWK	RP-5113	RU-5147DK
69-2003TFK	RU-5147	RU-5147DK
69-2004TTK	RU-4960	RX-4990DK
69-2005TTK	RC-5144	RC-4690DK
69-2020TP	RC-9350	RC-9350DK
69-2020TR	RC-9350	RC-9350DK
69-2021TP	RU-4950	RX-4990DK
69-2022TS	RC-9630	RC-9350DK
69-2520TP	RU-4950	RX-4990DK
69-2520TR	RU-4950	RX-4990DK
69-2521TB	RU-4950	RX-4990DK
69-2521TP	RU-4950	RX-4990DK
69-2526TP	RF-1042	RF-1042DK
69-2527TTR	RF-1048	RF-1048DK
69-2541TB	RU-4950	RX-4990DK

Filter Wrap Suffix K = Black, L = Blue, R=Red, Y=Yellow

Visit knfilters.com® to see available colors

Intake System Spare Filters and Wraps

Intake System	Spare Filter	Filter Wrap
69-2541TP	RU-4950	RX-4990DK
69-2542TS	RU-4860	RX-4730DK
69-2543TTK	RU-4730	RX-4730DK
69-2544TP	RF-1042	RF-1042DK
69-2545TP	RF-1042	RF-1042DK
69-3002TS	RC-9350	RC-9350DK
69-3300TB	RU-4960	RX-4990DK
69-3300TP	RU-4960	RX-4990DK
69-3300TR	RU-4960	RX-4990DK
69-3300TS	RU-4960	RX-4990DK
69-3301TB	RU-4950	RX-4990DK
69-3301TP	RU-4950	RX-4990DK
69-3301TS	RU-4950	RX-4990DK
69-3302TB	RC-9310	RC-9310DK
69-3302TP	RC-9310	RC-9310DK
69-3302TS	RC-9310	RC-9310DK
69-3500TB	RU-4990	RX-4990DK
69-3500TP	RU-4990	RX-4990DK
69-3510TB	RU-4860	RX-4730DK
69-3510TP	RU-4860	RX-4730DK
69-3511TP	RU-4960	RX-4990DK
69-3511TR	RU-4960	RX-4990DK
69-3512TP	RU-4950	RX-4990DK
69-3512TR	RU-4950	RX-4990DK
69-3513TTK	RU-4950	RX-4990DK
69-3514TTK	RU-4960	RX-4990DK
69-3515TS	RU-5176	RX-4990DK
69-3516TTK	RU-4960XD	RX-4990DK
69-3517TS	RC-5284	
69-3520TP	RU-5122	RC-5106DK
69-3521TP	RF-1036	RF-1036DK
69-3522TP	RF-1048	RF-1048DK
69-3523KP	RF-1048	RF-1048DK
69-3524TP	RF-1036	RF-1036DK
69-3525TS	RC-4381	RF-1036DK
69-3526TP	RF-1048	RF-1048DK
69-3527TP	RF-1048	RF-1048DK
69-3528TS	RF-1048	RF-1048DK
69-3529TP	RC-2960XD	22-8049DK
69-3530TS	RC-9630	RC-9350DK
69-3531TS	RF-1048	RF-1048DK
69-3532TTK	RU-5122	RC-5106DK
69-4000TB	RU-4860	RX-4730DK
69-4000TS	RU-4860	RX-4730DK
69-4002TB	RC-9310	RC-9310DK
69-4510TS	RU-4960	RX-4990DK
69-4515TS	RU-5147	RU-5147DK
69-4516TS	RU-4990	RX-4990DK
69-4517TTK	RU-5147	RU-5147DK
69-4518TTK	RC-4470	RC-4700DK
69-4519TP	RF-1042	RF-1042DK
69-4520TP	RF-1042	RF-1042DK
69-4521TS	RU-5147	RU-5147DK
69-4522TS	RU-5147	RU-5147DK
69-4523TP	RC-5107	RC-5107DK
69-4900TB	RC-9350	RC-9350DK
69-4900TS	RC-9350	RC-9350DK
69-5300TR	RU-4870	RX-4730DK
69-5300TS	RU-4870	RX-4730DK
69-5301TTK	RC-5138	22-8049DK
69-5302TTK	RP-4600	22-8036PK
69-5303TS	RU-4600	22-8036PK

Intake System	Spare Filter	Filter Wrap
69-5305TP	RU-4870	RX-4730DK
69-5306TS	RU-4990	RX-4990DK
69-5307TTK	RU-4600	22-8036PK
69-5309TS	RF-1048	RF-1048DK
69-6000TP	RU-4870	RX-4730DK
69-6000TR	RU-4870	RX-4730DK
69-6010TR	RU-4950	RX-4990DK
69-6010TS	RU-4950	RX-4990DK
69-6011TS	RU-4960	RX-4990DK
69-6012TS	RU-4960	RX-4990DK
69-6013TTK	RU-4960XD	RX-4990DK
69-6020TR	RU-4950	RX-4990DK
69-6020TS	RU-4950	RX-4990DK
69-6025TS	RU-4870	RX-4730DK
69-6026TS	RU-4870	RX-4730DK
69-6027TTK	RU-4870	RX-4730DK
69-6028TTK	RU-4960	RX-4990DK
69-6030-1TFK	RU-5123	
69-6501TB	RU-4730	RX-4730DK
69-6501TP	RU-4730	RX-4730DK
69-6502TR	RU-4730	RX-4730DK
69-6506TR	RU-4730	RX-4730DK
69-6506TS	RU-4730	RX-4730DK
69-6540TB	RU-4730	RX-4730DK
69-6540TP	RU-4730	RX-4730DK
69-6543TP	RP-4600	22-8036PK
69-6543TR	RP-4600	22-8036PK
69-6544TS	RU-4950	RX-4990DK
69-6545T	RP-4600	22-8036PK
69-6546TWR	RF-1047	
69-7000TP	RU-4960	RX-4990DK
69-7000TR	RU-4960	RX-4990DK
69-7001TTK	RU-3700	22-8014PK
69-7002TTK	RC-2960	22-8049DK
69-7060TS	RU-4870	RX-4730DK
69-7061TS	RU-4990	RX-4990DK
69-7062TTK	RU-4990	RX-4990DK
69-7070TB	RU-4990	RX-4990DK
69-7070TP	RU-4990	RX-4990DK
69-7071TS	RU-4960	RX-4990DK
69-7075TS	RU-4600	22-8036PK
69-7076TS	RU-4600	22-8036PK
69-7077TTK	RC-9350	RC-9350DK
69-7078TS	RU-4960XD	RX-4990DK
69-7080-1TS	RU-4730	RX-4730DK
69-7081-1TS	RU-4960	RX-4990DK
69-7082TS	RU-4960	RX-4990DK
69-7200TP	RC-5138	22-8049DK
69-7201TP	RF-1048	RF-1048DK
69-7202-1TTK	RF-1023	RF-1023DK
69-7501TB	RC-9630	RC-9350DK
69-7501TS	RC-9630	RC-9350DK
69-7502TB	RC-5136	RC-9310DK
69-7502TP	RC-5136	RC-9310DK
69-7502TS	RC-5136	RC-9310DK
69-7503TB	RC-9310	RC-9310DK
69-7503TS	RC-9310	RC-9310DK
69-7505TP	RC-9350	RC-9350DK
69-7505TR	RC-9350	RC-9350DK
69-7505TS	RC-9350	RC-9350DK
69-7800TB	RU-5090	RC-9310DK
69-7800TS	RU-5090	RC-9310DK

Intake System	Spare Filter	Filter Wrap
69-8001TS	RP-5113	RU-5147DK
69-8001TWR	RP-5113	RU-5147DK
69-8002TS	RP-5113	RU-5147DK
69-8003TFK	RP-5113	RU-5147DK
69-8004TTK	RP-5113	RU-5147DK
69-8005TWR	RP-5113	RU-5147DK
69-8250TS	RU-4990	RX-4990DK
69-8250TWR	RU-4990	RX-4990DK
69-8251TB	RC-9350	RC-9350DK
69-8251TS	RC-9350	RC-9350DK
69-8400TR	RU-4960	RX-4990DK
69-8400TS	RU-4960	RX-4990DK
69-8431TP	RU-4990	RX-4990DK
69-8432TS	RU-4990	RX-4990DK
69-8433TTK	RP-5182	
69-8520TR	RU-4870	RX-4730DK
69-8520TS	RU-4870	RX-4730DK
69-8522TS	RU-4870	RX-4730DK
69-8600TP	RU-4960	RX-4990DK
69-8600TR	RU-4960	RX-4990DK
69-8601TP	RU-4960	RX-4990DK
69-8601TR	RU-4960	RX-4990DK
69-8605TS	RU-4860	RX-4730DK
69-8606TB	RU-4950	RX-4990DK
69-8606TP	RU-4950	RX-4990DK
69-8607TB	RU-4960	RX-4990DK
69-8607TS	RU-4960	RX-4990DK
69-8608TFK	E-3038	
69-8609TTK	RU-4960	RX-4990DK
69-8610TTK	RU-4990	RX-4990DK
69-8611TS	RU-4990	RX-4990DK
69-8612TFK	RU-5174	RX-4990DK
69-8613TS	RU-3570	RX-4990DK
69-8614TS	RU-4860	RX-4730DK
69-8615TS	RC-4630	RC-4630DK
69-8616TS	RP-4600	22-8036PK
69-8617TTK	RU-4990	RX-4990DK
69-8618TS	RU-4990	RX-4990DK
69-8700TP	RU-4960	RX-4990DK
69-8701TP	RU-5176	RX-4990DK
69-8702TP	RU-4990	RX-4990DK
69-8703TS	RT-4600	22-8036PK
69-8750TR	RU-4870	RX-4730DK
69-8750TS	RU-4870	RX-4730DK
69-8751TP	RU-4960	RX-4990DK
69-8751TR	RU-4960	RX-4990DK
69-8752TR	RU-4870	RX-4730DK
69-8752TS	RU-4870	RX-4730DK
69-8753TR	RC-5144	RC-4690DK
69-8753TS	RC-5144	RC-4690DK
69-8754TP	RU-4960	RX-4990DK
69-8754TR	RU-4960	RX-4990DK
69-8756TB	RU-4950	RX-4990DK
69-8756TP	RU-4950	RX-4990DK
69-8757TTK	RU-4960	RX-4990DK
69-9000TS	RU-4730	RX-4730DK
69-9501TB	RU-4960	RX-4990DK
69-9501TP	RU-4960	RX-4990DK
69-9502TB	RP-5118	RC-3690DK
69-9502TP	RP-5118	RC-3690DK
69-9503TFK	RU-4960	RX-4990DK
69-9504TTK	RX-4730XD	RX-4730DL

Filter Wrap Suffix K = Black, L = Blue, R=Red, Y=Yellow

Visit knfilters.com® to see available colors

Intake System Spare Filters and Wraps

Intake System	Spare Filter	Filter Wrap
69-9505T	RF-1047	
69-9750TS	RC-9630	RC-9350DK
69-9750TWR	RC-9630	RC-9350DK
69-9751TB	RC-9630	RC-9350DK
69-9751TS	RC-9630	RC-9350DK
69-9752TB	RU-4960	RX-4990DK
69-9752TP	RU-4960	RX-4990DK
69-9754TS	RC-9350	RC-9350DK
69-9756TFK	RU-4960	RX-4990DK
77-1513KP	RF-1045	RF-1045DK
77-1516KP	RU-4990	RX-4990DK
77-1526KP	RU-4870	RX-4730DK
77-1529KP	RC-5106	RC-5106DK
77-1533KP	RC-3690	RC-3690DK
77-1538KP	RC-3690	RC-3690DK
77-1539KP	RC-3690	RC-3690DK
77-1540KP	RF-1048	RF-1048DK
77-1545KP	RF-1048	RF-1048DK
77-1546KP	RF-1048	RF-1048DK
77-1547KP	RF-1048	RF-1048DK
77-1548KP	RF-1048	RF-1048DK
77-1549KP	RF-1048	RF-1048DK
77-1553KP	RU-4730	RX-4730DK
77-1554KP	RF-1041	RF-1041DK
77-1558KP	RF-1048	RF-1048DK
77-1559KP	RF-1048	RF-1048DK
77-1560KTK	RF-1041	RF-1041DK
77-1561KP	RF-1044	RF-1020DK
77-1562KTK	RF-1042	RF-1042DK
77-1563KP	RF-1041	RF-1041DK
77-1566KP	RF-1048	RF-1048DK
77-2514KP	RC-5046	RC-5046DK
77-2529KP	RF-1048	RF-1048DK
77-2550KP	RC-5107	RC-5107DK
77-2552KP	RF-1037	RF-1037DK
77-2556KP	RC-5046	RC-5046DK
77-2557KP	RF-1020	RF-1020DK
77-2561KP	RF-1048	RF-1048DK
77-2568KP	RF-1020	RF-1020DK
77-2569KP	RF-1041	RF-1041DK
77-2570KTK	RC-5046	RC-5046DK
77-2573KP	RF-1048	RF-1048DK
77-2574KS	RF-1042	RF-1042DK
77-2575KS	RF-1048	RF-1048DK
77-2577KTK	RC-5173	RC-5173DK
77-2578KS	RF-1048	RF-1048DK
77-2579KTK	RF-1044XD	RF-1020DR
77-2580KP	RC-5173	RC-5173DK
77-2581KP	RC-5173	RC-5173DK
77-2582KTK	RC-5173	RC-5173DK
77-2583KS	RF-1048	RF-1048DK
77-2584KP	RC-5173	RC-5173DK
77-3000KP	RF-1037	RF-1037DK
77-3021KP	RC-5046	RC-5046DK
77-3023KP	RC-5046	RC-5046DK
77-3031KP	RC-5046	RC-5046DK
77-3034KP	RC-5112	RC-5112DK
77-3036KP	RU-4730	RX-4730DK
77-3037KP	RF-1041	RF-1041DK
77-3043KP	RF-1048	RF-1048DK
77-3044KP	RF-1048	RF-1048DK
77-3047KP	RC-5112	RC-5112DK

Intake System	Spare Filter	Filter Wrap
77-3050KP	RF-1041	RF-1041DK
77-3058KP	RF-1042	RF-1042DK
77-3062KP	RU-4730	RX-4730DK
77-3063KTK	RC-5165	RC-5165DK
77-3064KTK	RC-5181	RF-1026DK
77-3065KP	RF-1048	RF-1048DK
77-3070KP	RF-1042	RF-1042DK
77-3071KS	RC-5138	22-8049DK
77-3076KTK	RF-1042XD	RF-1042DK
77-3515KP	RC-4470	RC-4700DK
77-6012KP	RC-5046	RC-5046DK
77-6014-1KP	RF-1014	RF-1014DK
77-6016KS	RC-4381	RF-1036DK
77-9015KP	RF-1042	RF-1042DK
77-9016KP	RF-1037	RF-1037DK
77-9020KP	RC-2960	22-8049DK
77-9022KP	RF-1048	RF-1048DK
77-9023KP	RF-1048	RF-1048DK
77-9025KP	RF-1048	RF-1048DK
77-9026KP	RF-1042	RF-1042DK
77-9027KP	RF-1042	RF-1042DK
77-9028KP	RF-1042	RF-1042DK
77-9029KP	RF-1048	RF-1048DK
77-9030KP	RF-1048	RF-1048DK
77-9031-1KP	RF-1042	RF-1042DK
77-9032-1KP	RU-5045	RU-5045DK
77-9033KP	RF-1020	RF-1020DK
77-9034KP	RF-1044XD	RF-1020DR
77-9035KP	RF-1042XD	RF-1042DK
77-9036KP	RF-1044	RF-1020DK

Intake System	Spare Filter	Filter Wrap

Filter Wrap Suffix K = Black, L = Blue, R=Red, Y=Yellow

Visit knfilters.com® to see available colors

Round Straight

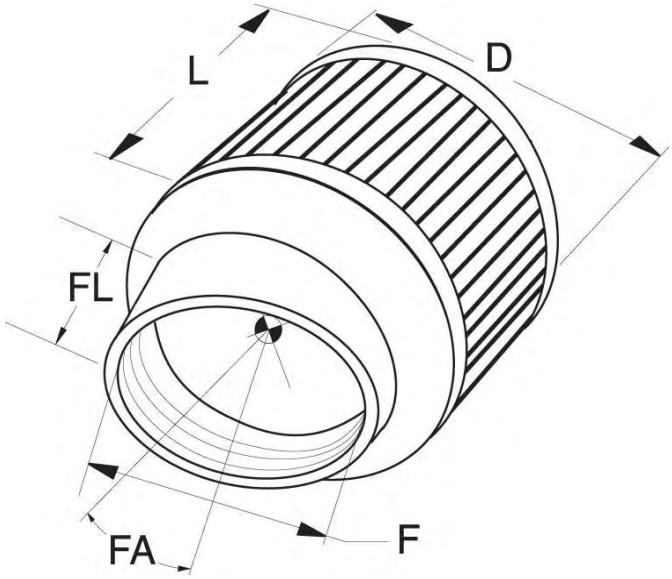

When selecting one of K&N's universal round straight air filters, you should consider the following dimensions as they relate to the specification chart:

(F) Mounting Flange Inside Diameter - This is the most critical dimension and should be very close to the diameter of the application's inlet flange. The flange will stretch up to 1/16" for those in-between sizes.

(D) Filter Diameter - This is the overall diameter of the filter. Always use the largest diameter practical for maximum filtration.

(L) Filter Length - This dimension is the length of the filter body only, it does not include the flange length. Always use the longest filter practical for maximum filtration.

(FA/FL) Flange Angle and/or Length - If no angle is listed in the specifications table, then the flange is straight. Any angle listed is in degrees and can be utilized when space is a problem.

(FO) Flange Offset - In some cases the center of the flange is offset from the center of the filter base in order to provide a better fit.

(F) Mounting Flange Inside Diameter		(D) Filter Diameter		(L) Filter Length		(FL) Flange Length		(FA) Flange Style		(FO) Flange Offset		Rubber End Cap Part #	Chrome End Cap Part #	Custom End Cap Part #	Filter Wraps Part #
Inch	mm	Inch	mm	Inch	mm	Inch	mm	Type	Angle	Inch	mm				
0	0	3-17/40	87	7-19881	198	0	0	0						38-9070	
5/16	8	1-3/8	35	1-1/8	29	7/16	11	Centered					62-2470		
3/8	10	2	51	1-1/2	38	3/8	10	Centered						62-1570[28]	
		2	51	1-1/2	38	5/8	16	Centered					62-1320		
		2	51	1-3/4	44	1/2	13	Centered					62-1600RD		
1/2	13	2	51	1-1/2	38	5/8	16	Centered					62-1330		
9/16	14	1-3/8	35	1-1/8	29	7/16	11	Centered					62-2480		
5/8	16	1-3/8	35	1-1/8	29	3/8	10	Centered				RU-3230			
		2	51	1-1/2	38	5/8	16	Centered					62-1340		
11/16	17	2	51	2-1/8	54	1	25	Centered					62-1230		
3/4	19	1-3/8	35	1-1/8	29	1/2	13	Centered				62-1560			
		2	51	1-1/2	38	5/8	16	Centered					62-1360		
		2	51	2-1/2	64	5/8	16	Centered				RU-3630			
1	25	2	51	1-1/2	38	5/8	16	Centered					62-1370		
		3	76	2-1/4	57	5/8	16	Centered					62-1420		RU-0150PK
		3	76	2-3/8	60	5/8	16	Centered				62-1410			RU-0150PK
31/32	25	3-5/16	84	3-1/32	77	1/2	13	Centered				38-9093			
1-1/16	27	3	76	3	76	5/8	16	Centered				R-1040			22-8008PK
1-1/4	32	3	76	2-1/2	64	5/8	16	Centered				62-1380	62-1390		RU-0150PK
		3	76	2-1/2	64	5/8	16	Centered						62-1580	
		3	76	3	76	5/8	16	Centered				RU-0060			22-8008PK
		3	76	4	102	5/8	16	Centered				RU-0070			22-8009PK
		3	76	4	102	3/4	19	Angled	20°			RU-0100			22-8009PK
		3	76	5	127	5/8	16	Centered				RU-0080			RU-0210PK
		3	76	5	127	3/4	19	Angled	20°			RU-0110			RU-0210PK
1-3/8	35	3	76	2-1/2	64	5/8	16	Centered				62-1430	62-1440		RU-0150PK

1) 1/4-20 Jack Nut Inserted Into Filter Top 2) Base Has (2) 7/8" Vents 3) Base Has 1/2" Vent 4) Base Has 1/32" Vent 5) Base Has 1/4" Vent 6) Base Has 11/16" Vent 7) Base Has 1-1/8" Vent 8) Base Has 13/16" Vent 9) Base Has 13/32" Vent 10) Base Has 13/64" Vent 11) Base Has 15/32" Vent 12) Base Has 15/64" Vent 13) Base Has 19/32" Vent 14) Base Has 21/32" Vent 15) Base Has 25/64" Vent 16) Base Has 29/32" Vent 17) Base Has 3/16" Vent 18) Base Has 3/4" Vent 19) Base Has 3/8" Vent 20) Base Has 31/64" Vent 21) Base Has 35/64" Vent 22) Base Has 45/64" Vent 23) Base Has 5/16" Vent 24) Base Has 5/8" Vent 25) Base Has 55/64" Vent 26) Base Has 7/16" Vent 27) Base Has 7/8" Vent 28) Base Has 9/16" Vent 29) Base Has Optional 1/2" Vent 30) Black Powder Coated Top Plate 31) Carbon Fiber Top Plate 32) Filter Has Molded-in Velocity Stack 33) Filter Is Reverse Tapered 34) Fits "Legend/Dwarf" Race Cars w/FJ1200 Motors 35) Galvanized Top Plate 36) Metal Top Plate Has 1/4-20 Stud 37) Metal Top-Plate Has 6MM Stud 38) Offset Is Horizontal 39) Offset Is Vertical 40) Offset Is Vertical And To The Left 41) Offset Is Vertical And To The Right 42) Top Has 1/2" Vent 43) Top Has 1-1/16" Center Hole 44) Top Has 21/32" Center Hole 45) Top Has 23/32" Center Hole 46) Top Has 5/32" Center Hole 47) Top Has 7/16" Vent 48) Top Has Two 0.400" Vents 49) 2-1/4" Adapter Included 50) Tapered Insert Included 5" to 4-3/8"

(F) Mounting Flange Inside Diameter		(D) Filter Diameter		(L) Filter Length		(FL) Flange Length		(FA) Flange Style		(FO) Flange Offset		Rubber End Cap Part #	Chrome End Cap Part #	Custom End Cap Part #	Filter Wraps Part #
Inch	mm	Inch	mm	Inch	mm	Inch	mm	Type	Angle	Inch	mm				
1-1/2	38	3	76	2-1/2	64	5/8	16	Centered				62-1450			RU-0150PK
		3	76	2-1/2	64	5/8	16	Centered					62-1460		RU-0150PK
		3	76	3	76	5/8	16	Centered				RU-0155			
		3	76	4	102	5/8	16	Centered				RU-0160			22-8009PK
		3	76	6	152	5/8	16	Centered				RU-0175			
1-9/16	40	3	76	2	51	5/8	16	Centered					RC-0840		RU-0150PK
		3	76	2-1/4	57	5/8	16	Centered					RC-0880		RU-0150PK
		3	76	2-1/2	64	5/8	16	Centered				RU-2310	RC-0160		RU-0150PK
		3	76	3	76	5/8	16	Centered					RC-0870		22-8008PK
		3-1/2	89	1-1/2	38	5/8	16	Centered					RC-0170		RC-0170DK
1-11/16	43	3	76	2-1/2	64	5/8	16	Centered				RU-1130	RC-1130		RU-0150PK
		3	76	3	76	5/8	16	Centered					RC-1120		22-8008PK
		3	76	4	102	5/8	16	Centered				RU-0200			22-8009PK
		3	76	5	127	5/8	16	Centered				RU-0210			RU-0210PK
		3	76	6	152	1-1/2	38	Angled	40°			R-1030			22-8010PK
		3-1/2	89	2	51	5/8	16	Centered					RC-0190		
		3-1/2	89	10	254	5/8	16	Centered				RU-3850			25-3918
		4	102	2	51	5/8	16	Centered				RU-0260			
		5-1/4	133	2	51	5/8	16	Offset		3/4	19	RU-0310			
1-3/4	44	3	76	2	51	5/8	16	Centered				RU-2570			RU-0150PK
		3	76	2-1/2	64	5/8	16	Centered				62-1470	62-1480		RU-0150PK
		3	76	3	76	5/8	16	Centered				RU-2685			
		3	76	6	152	5/8	16	Centered				RU-2575			
		3-1/2	89	1-1/2	38	5/8	16	Centered					RC-2870		RC-0170DK
		3-1/2	89	4-1/2	114	1	25	Angled	10°			RU-1030			RU-0510PK
		3-1/2	89	5	127	5/8	16	Centered				RU-0360			25-1770
		3-1/2	89	5	127	3/4	19	Angled	10°			RU-1040			25-1770
		3-1/2	89	6	152	5/8	16	Centered				R-1050			25-1770
		3-1/2	89	6	152	3/4	19	Angled	10°			RU-1050			RU-0520PK
		4-1/2	114	1-1/2	38	5/8	16	Offset		9/16	14		RC-0330		25-0330
		4-1/2	114	1-1/2	38	5/8	16	Centered				RU-0340	RC-0340		25-0330
		4-1/2	114	2	51	5/8	16	Centered				RU-0370	RC-0370		
1-13/16	46	3	76	2-1/4	57	5/8	16	Centered					RC-0910		RU-0150PK
		3	76	2-1/4	57	1	25	Centered					RC-2620		RU-0150PK
		3	76	3	76	5/8	16	Centered					RC-0890		22-8008PK
		5-1/2	140	3	76	5/8	16	Offset		15/16	24	RU-0350			22-8015PK
1-7/8	48	3	76	1-1/2	38	5/8	16	Centered				RU-2560			
		3	76	2	51	5/8	16	Centered				RU-3350			RU-0150PK
		3	76	4	102	5/8	16	Centered				RU-0400			22-8009PK
		3	76	4	102	1	25	Angled	10°			RU-1280	RC-1280		22-8009PK
		3	76	5	127	5/8	16	Centered				RU-0410	RC-0410		RU-0210PK
		3	76	6	152	5/8	16	Centered				RU-0420			22-8010PK
		3-1/2	89	4	102	5/8	16	Centered				RD-0450			RU-0500PK
		3-1/2	89	5	127	5/8	16	Centered				RD-0460			25-1770
		3-1/2	89	6	152	5/8	16	Centered				RD-0470			25-1770

1) 1/4-20 Jack Nut Inserted Into Filter Top 2) Base Has (2) 7/8" Vents 3) Base Has 1/2" Vent 4) Base Has 1/32" Vent 5) Base Has 1/4" Vent 6) Base Has 11/16" Vent 7) Base Has 1-1/8" Vent 8) Base Has 13/16" Vent 9) Base Has 13/32" Vent 10) Base Has 13/64" Vent 11) Base Has 15/32" Vent 12) Base Has 15/64" Vent 13) Base Has 19/32" Vent 14) Base Has 21/32" Vent 15) Base Has 25/64" Vent 16) Base Has 29/32" Vent 17) Base Has 3/16" Vent 18) Base Has 3/4" Vent 19) Base Has 3/8" Vent 20) Base Has 31/64" Vent 21) Base Has 35/64" Vent 22) Base Has 45/64" Vent 23) Base Has 5/16" Vent 24) Base Has 5/8" Vent 25) Base Has 55/64" Vent 26) Base Has 7/16" Vent 27) Base Has 7/8" Vent 28) Base Has 9/16" Vent 29) Base Has Optional 1/2" Vent 30) Black Powder Coated Top Plate 31) Carbon Fiber Top Plate 32) Filter Has Molded-in Velocity Stack 33) Filter Is Reverse Tapered 34) Fits "Legend/Dwarf" Race Cars w/FJ1200 Motors 35) Galvanized Top Plate 36) Metal Top Plate Has 1/4-20 Stud 37) Metal Top-Plate Has 6MM Stud 38) Offset Is Horizontal 39) Offset Is Vertical 40) Offset Is Vertical And To The Left 41) Offset Is Vertical And To The Right 42) Top Has 1/2" Vent 43) Top Has 1-1/16" Center Hole 44) Top Has 21/32" Center Hole 45) Top Has 23/32" Center Hole 46) Top Has 5/32" Center Hole 47) Top Has 7/16" Vent 48) Top Has Two 0.400" Vents 49) 2-1/4" Adapter Included 50) Tapered Insert Included 5" to 4-3/8"

Round Straight

(F) Mounting Flange Inside Diameter		(D) Filter Diameter		(L) Filter Length		(FL) Flange Length		(FA) Flange Style		(FO) Flange Offset		Rubber End Cap Part #	Chrome End Cap Part #	Custom End Cap Part #	Filter Wraps Part #
Inch	mm	Inch	mm	Inch	mm	Inch	mm	Type	Angle	Inch	mm				
1-15/16	49	3	76	2	51	5/8	16	Centered				RU-2700			RU-0150PK
		3	76	2-1/2	64	5/8	16	Centered				RU-2760			RU-0150PK
		3	76	3	76	5/8	16	Centered				RP-5164			22-8008PK
		3	76	4	102	5/8	16	Centered				RP-5119			22-8009PK
		3-1/2	89	4	102	2	51	Angled	20°			RU-1400			RU-0500PK
		3-1/2	89	5	127	2	51	Angled	20°			RU-1410			25-1770
		3-1/2	89	6	152	2	51	Angled	20°			RU-1420			25-1770
2	51	5-1/8	130	2	51	11/16	17	Offset		1	25		RC-2400		
		5-3/8	137	2	51	5/8	16	Centered					RC-2440		
		7	178	9	229	5/8	16	Centered					41-1000[2]		22-8022PK
2-1/16	52	3	76	2-1/2	64	5/8	16	Centered				RU-1880	RC-1880		RU-0150PK
		3	76	3	76	5/8	16	Centered					RC-1890		22-8008PK
		3-1/2	89	3	76	5/8	16	Centered					RC-1150		
		3-1/2	89	4	102	5/8	16	Centered				RU-0500	RC-0500		RU-0500PK
		3-1/2	89	4	102	7/8	22	Centered				RA-0500			RU-0500PK
		3-1/2	89	5	127	5/8	16	Centered				RU-0510			25-1770
		3-1/2	89	5	127	3/4	19	Angled	10°			RU-1060			25-1770
		3-1/2	89	5	127	7/8	22	Centered				RA-0510			25-1770
		3-1/2	89	5	127	2-1/2	64	Angled	17°			RU-1780			25-1770
		3-1/2	89	6	152	5/8	16	Centered				RU-0520			25-1770
		3-1/2	89	6	152	3/4	19	Angled	10°			RU-1070			25-1770
		3-1/2	89	6	152	7/8	22	Centered				RA-0520			25-1770
		4-1/2	114	4	102	7/8	22	Centered				RA-0530			22-8012PK
		4-1/2	114	5	127	7/8	22	Centered				RA-0540			22-8013PK
		5-1/2	140	2	51	5/8	16	Offset		5/16	8	RU-0570			
		5-1/2	140	2	51	7/8	22	Centered				RA-0550[5]	RA-055V[5]		
		5-1/2	140	3	76	7/8	22	Centered				RA-0560[5]	RA-056V[5]		22-8015PK
		5-1/2	140	4	102	7/8	22	Centered				RA-0570[5]	RA-057V[5]		
		5-1/2	140	5	127	7/8	22	Centered				RA-0580[5]	RA-058V[5]		22-8016PK
		5-7/8	149	2	51	7/8	22	Offset		1-1/8	29	RA-0450[5]	RA-045V[5]		22-8017PK
		5-7/8	149	3	76	7/8	22	Offset		1-1/8	29	RA-0460[5]	RA-046V[5]		22-8018PK
		5-7/8	149	4	102	7/8	22	Offset		1-1/8	29	RA-0470[5]	RA-047V[5]		
2-1/8	54	3	76	3	76	5/8	16	Centered					RC-1910		22-8008PK
		3-1/2	89	4	102	7/8	22	Centered				RD-0500			RU-0500PK
		3-1/2	89	4	102	1	25	Angled	5°			RB-0500			RU-0500PK
		3-1/2	89	5	127	7/8	22	Centered				RD-0510			25-1770
		3-1/2	89	5	127	1	25	Angled	5°			RB-0510	RC-0510		RU-0510PK
		3-1/2	89	6	152	7/8	22	Centered				RD-0520			25-1770
		3-1/2	89	6	152	1	25	Angled	5°			RB-0520			25-1770
2-1/4	57	3-1/2	89	1-1/4	32	5/8	16	Centered					RC-2880		RC-0170DK
		3-1/2	89	2	51	5/8	16	Centered					RC-1900		
		3-1/2	89	4	102	5/8	16	Centered				RU-0600			RU-0500PK
		3-1/2	89	4	102	1	25	Angled	5°			RB-0600			RU-0500PK
		3-1/2	89	4	102	1	25	Angled	20°			RU-1700			RU-0500PK
		3-1/2	89	5	127	5/8	16	Centered				RU-0610			25-1770

1) 1/4-20 Jack Nut Inserted Into Filter Top 2) Base Has (2) 7/8" Vents 3) Base Has 1/2" Vent 4) Base Has 1/32" Vent 5) Base Has 1/4" Vent 6) Base Has 11/16" Vent 7) Base Has 1-1/8" Vent 8) Base Has 13/16" Vent 9) Base Has 13/32" Vent 10) Base Has 13/64" Vent 11) Base Has 15/32" Vent 12) Base Has 15/64" Vent 13) Base Has 19/32" Vent 14) Base Has 21/32" Vent 15) Base Has 25/64" Vent 16) Base Has 29/32" Vent 17) Base Has 3/16" Vent 18) Base Has 3/4" Vent 19) Base Has 3/8" Vent 20) Base Has 31/64" Vent 21) Base Has 35/64" Vent 22) Base Has 45/64" Vent 23) Base Has 5/16" Vent 24) Base Has 5/8" Vent 25) Base Has 55/64" Vent 26) Base Has 7/16" Vent 27) Base Has 7/8" Vent 28) Base Has 9/16" Vent 29) Base Has Optional 1/2" Vent 30) Black Powder Coated Top Plate 31) Carbon Fiber Top Plate 32) Filter Has Molded-in Velocity Stack 33) Filter Is Reverse Tapered 34) Fits "Legend/Dwarf" Race Cars w/FJ1200 Motors 35) Galvanized Top Plate 36) Metal Top Plate Has 1/4-20 Stud 37) Metal Top-Plate Has 6MM Stud 38) Offset Is Horizontal 39) Offset Is Vertical 40) Offset Is Vertical And To The Left 41) Offset Is Vertical And To The Right 42) Top Has 1/2" Vent 43) Top Has 1-1/16" Center Hole 44) Top Has 21/32" Center Hole 45) Top Has 23/32" Center Hole 46) Top Has 5/32" Center Hole 47) Top Has 7/16" Vent 48) Top Has Two 0.400" Vents 49) 2-1/4" Adapter Included 50) Tapered Insert Included 5" to 4-3/8"

(F) Mounting Flange Inside Diameter		(D) Filter Diameter		(L) Filter Length		(FL) Flange Length		(FA) Flange Style		(FO) Flange Offset		Rubber End Cap Part #	Chrome End Cap Part #	Custom End Cap Part #	Filter Wraps Part #
Inch	mm	Inch	mm	Inch	mm	Inch	mm	Type	Angle	Inch	mm				
2-1/4	57	3-1/2	89	5	127	3/4	19	Angled	10°			RU-1080			25-1770
		3-1/2	89	5	127	1	25	Angled	5°			RB-0610			25-1770
		3-1/2	89	5	127	1	25	Angled	20°			RU-1710			25-1770
		3-1/2	89	6	152	5/8	16	Centered				RU-0620			25-1770
		3-1/2	89	6	152	3/4	19	Angled	10°			RU-1090			25-1770
		3-1/2	89	6	152	1	25	Angled	5°			RB-0620			25-1770
		3-1/2	89	6	152	1	25	Angled	20°			RU-1720			25-1770
		3-1/2	89	10	254	5/8	16	Centered				RU-3840			25-3918
		4-1/2	114	2	51	5/8	16	Offset		5/16	8		RC-1950		
		4-1/2	114	4	102	5/8	16	Centered				RU-0630			22-8012PK
		4-1/2	114	5	127	5/8	16	Centered				RU-0640			22-8013PK
		5-1/2	140	2-1/2	64	5/8	16	Offset		13/16	21	RU-0650	RC-0650		
		5-1/2	140	3	76	5/8	16	Offset		13/16	21	RU-0660			22-8015PK
		5-1/2	140	3-1/2	89	5/8	16	Centered				RU-0690			
		5-1/2	140	5	127	5/8	16	Offset		13/16	21	RU-0680			22-8016PK
		7	178	9	229	5/8	16	Centered					41-1100[2]		22-8022PK
2-3/8	60	4-7/16	113	6-1/16	154	3/4	19	Centered				CM-8012			
2-7/16	62	3-1/2	89	4	102	5/8	16	Centered				RU-0800			RU-0500PK
		3-1/2	89	5	127	5/8	16	Centered				RU-0810			25-1770
		3-1/2	89	6	152	5/8	16	Centered				RU-0820[4]			25-1770
		3-1/2	89	6	152	1-1/8	29	Centered				RU-3030			25-1770
		3-3/4	95	2	51	2	51	Angled	20°			RU-1730			
		3-3/4	95	4	102	2	51	Angled	20°			RU-1750			22-8011PK
		3-3/4	95	5	127	2	51	Angled	20°			RU-1760			RU-1460PK
		3-3/4	95	6	152	2	51	Angled	20°			RU-1770			RU-1470PK
		4	102	4-3/4	121	3/4	19	Centered						RX-4040-1[1,15]	
		4-1/2	114	4	102	5/8	16	Centered				RU-0830			22-8012PK
		4-1/2	114	5	127	5/8	16	Centered				RU-0840			22-8013PK
		5	127	3	76	5/8	16	Centered					RC-0860		22-8015PK
		5-1/8	130	2	51	5/8	16	Centered					RC-0850		
		5-1/2	140	3	76	5/8	16	Offset		1/2	13	RU-0870			22-8015PK
		5-1/2	140	4	102	5/8	16	Offset		1/2	13	RU-0880			
		5-1/2	140	6	152	5/8	16	Offset		1/2	13	RU-1000			22-8045DK
2-1/2	64	3-1/2	89	4	102	5/8	16	Centered				RD-0700			RU-0500PK
		3-1/2	89	4	102	1	25	Angled	5°			RB-0700			RU-0500PK
		3-1/2	89	5	127	5/8	16	Centered				RD-0710			25-1770
		3-1/2	89	5	127	1	25	Angled	5°			RB-0710			25-1770
		3-1/2	89	6	152	5/8	16	Centered				RD-0720			25-1770
		3-1/2	89	6	152	1	25	Angled	5°			RB-0720			25-1770
		7	178	9	229	5/8	16	Centered					41-1200[2]		22-8022PK
2-9/16	65	4-1/2	114	4	102	3/4	19	Centered				RA-0600			22-8012PK
		4-1/2	114	5	127	3/4	19	Centered				RA-0610			22-8013PK
		5-1/2	140	2	51	3/4	19	Centered				RA-0620[5]	RA-062V[5]		
		5-1/2	140	3	76	3/4	19	Centered				RA-0630[5]	RA-063V[5]		22-8015PK
		5-1/2	140	4	102	3/4	19	Centered				RA-0640[5]			

1) 1/4-20 Jack Nut Inserted Into Filter Top 2) Base Has (2) 7/8" Vents 3) Base Has 1/2" Vent 4) Base Has 1/32" Vent 5) Base Has 1/4" Vent 6) Base Has 11/16" Vent 7) Base Has 1-1/8" Vent 8) Base Has 13/16" Vent 9) Base Has 13/32" Vent 10) Base Has 13/64" Vent 11) Base Has 15/32" Vent 12) Base Has 15/64" Vent 13) Base Has 19/32" Vent 14) Base Has 21/32" Vent 15) Base Has 25/64" Vent 16) Base Has 29/32" Vent 17) Base Has 3/16" Vent 18) Base Has 3/4" Vent 19) Base Has 3/8" Vent 20) Base Has 31/64" Vent 21) Base Has 35/64" Vent 22) Base Has 45/64" Vent 23) Base Has 5/16" Vent 24) Base Has 5/8" Vent 25) Base Has 55/64" Vent 26) Base Has 7/16" Vent 27) Base Has 7/8" Vent 28) Base Has 9/16" Vent 29) Base Has Optional 1/2" Vent 30) Black Powder Coated Top Plate 31) Carbon Fiber Top Plate 32) Filter Has Molded-in Velocity Stack 33) Filter Is Reverse Tapered 34) Fits "Legend/Dwarf" Race Cars w/FJ1200 Motors 35) Galvanized Top Plate 36) Metal Top Plate Has 1/4-20 Stud 37) Metal Top-Plate Has 6MM Stud 38) Offset Is Horizontal 39) Offset Is Vertical 40) Offset Is Vertical And To The Left 41) Offset Is Vertical And To The Right 42) Top Has 1/2" Vent 43) Top Has 1-1/16" Center Hole 44) Top Has 21/32" Center Hole 45) Top Has 23/32" Center Hole 46) Top Has 5/32" Center Hole 47) Top Has 7/16" Vent 48) Top Has Two 0.400" Vents 49) 2-1/4" Adapter Included 50) Tapered Insert Included 5" to 4-3/8"

Round Straight

(F) Mounting Flange Inside Diameter		(D) Filter Diameter		(L) Filter Length		(FL) Flange Length		(FA) Flange Style		(FO) Flange Offset		Rubber End Cap Part #	Chrome End Cap Part #	Custom End Cap Part #	Filter Wraps Part #
Inch	mm	Inch	mm	Inch	mm	Inch	mm	Type	Angle	Inch	mm				
2-9/16	65	5-1/2	140	5	127	3/4	19	Centered				RA-0650[5]			22-8016PK
		5-7/8	149	3	76	7/8	22	Offset		13/16	21		RA-067V[5]		
		5-7/8	149	4	102	7/8	22	Offset		13/16	21	RA-0680[5]			
		6	152	2	51	7/8	22	Offset		13/16	21	RA-0660[5]	RA-066V[5]		22-8017PK
		6	152	3	76	7/8	22	Offset		13/16	21	RA-0670[5]			
		6	152	4	102	7/8	22	Offset		13/16	21		RA-068V[5]		
2-5/8	67	4	102	2-1/4	57	1/2	13	Centered						60-0410	
		4	102	4	102	1	25	Angled	5°			RB-0800			22-8011PK
		4	102	5	127	1	25	Angled	5°			RB-0810			25-1770
		4-1/2	114	2	51	5/8	16	Centered				RU-2630			
		4-1/2	114	3	76	5/8	16	Centered				RU-2640			
		4-1/2	114	4	102	5/8	16	Centered				RU-2650			22-8012PK
2-11/16	68	4-1/2	114	4	102	5/8	16	Centered				RU-0900			22-8012PK
		4-1/2	114	5	127	5/8	16	Centered				RU-0910			22-8013PK
2-3/4	70	4	102	5	127	1	25	Angled	10°			RU-1460			RU-1460PK
		4	102	6	152	1	25	Angled	10°			RU-1470			25-1770
		4	102	6	152	2	51	Angled	20°			RU-3190			25-1770
		4	102	7	178	1	25	Angled	10°			RU-1480			RU-1480PK
		5	127	2	51	5/8	16	Centered					RC-0920		
		5	127	3	76	5/8	16	Centered					RC-0930		22-8015PK
		5-1/2	140	3	76	5/8	16	Offset		7/16	11	RU-0940			22-8015PK
		5-1/2	140	4	102	5/8	16	Offset		7/16	11	RU-0950			
		5-1/2	140	5	127	5/8	16	Offset		7/16	11	RU-0960			22-8016PK
		7	178	3	76	5/8	16	Offset		11/16	17	RU-0980			RU-0980PK
		7	178	7	178	5/8	16	Offset		11/16	17	RU-2940			25-3900
2-13/16	71	4-1/16	103	7	178	3/4	19	Centered				RX-5032			
2-7/8	73	4	102	5-3/8	137	5/8	16	Centered				RU-2410			25-3900
		4	102	6	152	5/8	16	Centered				RU-1620			25-1770
		4-1/2	114	5	127	5/8	16	Centered				RU-3710	RC-3710		HA-3094PR
		4-1/2	114	6-1/8	156	5/8	16	Centered				E-1989			RX-3820PK
		4-7/8	124	7-1/4	184	11/16	17	Centered				E-1988			
2-29/32	74	4-15/16	125	5-29/32	150	11/16	17	Centered					RC-9070		
3	76	4-5/16	110	4	102	1	25	Angled	5°			RB-0900			22-8012PK
		4-5/16	110	5	127	1	25	Angled	5°			RB-0910			22-8013PK
		5	127	3	76	5/8	16	Centered				RU-2420			22-8015PK
		5	127	5	127	5/8	16	Centered				RU-2430		RC-5182XD	RU-2430PK
		5	127	6-1/2	165	5/8	16	Centered				RU-2820			22-8044PK
		5	127	7	178	5/8	16	Centered						RX-2820[15]	22-8044PK
		5	127	9	229	5/8	16	Centered					RC-2530[2,33]		25-3918
		7	178	2	51	5/8	16	Offset		7/8	22	RA-0970[4]	RA-097V[4]		
		7	178	3	76	5/8	16	Offset		7/8	22	RA-0980[4]	RA-098V[4]		RU-0980PK
		7	178	3	76	1-1/8	29	Offset		1-1/16	27		RC-3140		RU-0980PK
		7	178	4	102	5/8	16	Offset		7/8	22	RA-0990[4]	RA-099V[4]		22-8019PK
		7	178	6	152	1	25	Centered					RD-1300		22-8021PK
3-1/16	78	6-7/8	175	5-15/16	151	9/16	14	Centered				RU-9040			

1) 1/4-20 Jack Nut Inserted Into Filter Top 2) Base Has (2) 7/8" Vents 3) Base Has 1/2" Vent 4) Base Has 1/32" Vent 5) Base Has 1/4" Vent 6) Base Has 11/16" Vent 7) Base Has 1-1/8" Vent 8) Base Has 13/16" Vent 9) Base Has 13/32" Vent 10) Base Has 13/64" Vent 11) Base Has 15/32" Vent 12) Base Has 15/64" Vent 13) Base Has 19/32" Vent 14) Base Has 21/32" Vent 15) Base Has 25/64" Vent 16) Base Has 29/32" Vent 17) Base Has 3/16" Vent 18) Base Has 3/4" Vent 19) Base Has 3/8" Vent 20) Base Has 31/64" Vent 21) Base Has 35/64" Vent 22) Base Has 45/64" Vent 23) Base Has 5/16" Vent 24) Base Has 5/8" Vent 25) Base Has 55/64" Vent 26) Base Has 7/16" Vent 27) Base Has 7/8" Vent 28) Base Has 9/16" Vent 29) Base Has Optional 1/2" Vent 30) Black Powder Coated Top Plate 31) Carbon Fiber Top Plate 32) Filter Has Molded-in Velocity Stack 33) Filter Is Reverse Tapered 34) Fits "Legend/Dwarf" Race Cars w/FJ1200 Motors 35) Galvanized Top Plate 36) Metal Top Plate Has 1/4-20 Stud 37) Metal Top-Plate Has 6MM Stud 38) Offset Is Horizontal 39) Offset Is Vertical 40) Offset Is Vertical And To The Left 41) Offset Is Vertical And To The Right 42) Top Has 1/2" Vent 43) Top Has 1-1/16" Center Hole 44) Top Has 21/32" Center Hole 45) Top Has 23/32" Center Hole 46) Top Has 5/32" Center Hole 47) Top Has 7/16" Vent 48) Top Has Two 0.400" Vents 49) 2-1/4" Adapter Included 50) Tapered Insert Included 5" to 4-3/8"

Round Straight

(F) Mounting Flange Inside Diameter		(D) Filter Diameter		(L) Filter Length		(FL) Flange Length		(FA) Flange Style		(FO) Flange Offset		Rubber End Cap Part #	Chrome End Cap Part #	Custom End Cap Part #	Filter Wraps Part #
Inch	mm	Inch	mm	Inch	mm	Inch	mm	Type	Angle	Inch	mm				
3-1/16	78	7	178	3	76	5/8	16	Centered				RA-0950[4]	RA-095V[4]		RU-0980PK
		7	178	4	102	5/8	16	Centered				RA-0960[4]	RA-096V[4]		22-8019PK
		7	178	6	152	5/8	16	Centered				RU-9004			22-8021PK
3-1/8	79	6	152	4-1/4	108	5/8	16	Centered				E-2996			
3-5/16	84	5-3/8	137	6-3/16	157	5/8	16	Centered				E-1998			
		5-13/16	148	7-1/4	184	3/4	19	Centered				E-0774			
3-3/8	86	5-13/16	148	7-1/4	184	5/8	16	Centered				E-1009			
3-1/2	89	5	127	3	76	5/8	16	Centered				RU-1790	RC-1790		22-8015PK
		5	127	5-5/8	143	5/8	16	Centered				RU-5114			CM-4508DK
		5	127	8-1/2	216	5/8	16	Centered				RU-1785			
3-17/32	90	4	102	5-31/32	152	23/32	18	Centered						RX-4140[15]	RU-1470PK
3-5/8	92	5-13/16	148	7-1/4	184	3/4	19	Centered				E-0773			
4	102	6-1/4	159	6	152	13/16	21	Centered				E-1996			
		6-1/4	159	7-3/4	197	13/16	21	Centered				E-2999			
		7	178	6	152	5/8	16	Centered					RD-1400[49]		22-8020PK
		7	178	6	152	1	25	Centered				RD-1450			22-8021PK
		7	178	8	203	5/8	16	Centered					RD-1410		
		7	178	9	229	1	25	Centered				RD-1460			22-8022PK
		7	178	18	457	5/8	16	Centered					41-1400[2]		25-3918
5	127	6-1/2	165	9	229	1	25	Centered				RU-3020			22-8022PK
		6-1/2	165	10	254	1	25	Centered				RU-3220			22-8022PK
5-1/2	140	7	178	9	229	1	25	Centered					RC-3150[2]		22-8022PK
6	152	7-1/2	191	4-1/2	114	1	25	Centered				RU-1850			
		7-1/2	191	6	152	1	25	Centered				RU-3060			25-3900
		7-1/2	191	8	203	1	25	Centered				RU-3260			
		7-1/2	191	10	254	1	25	Centered				RU-3270			RU-3270DR
		7-1/2	191	12	305	1	25	Centered				RU-3040			25-3918

1) 1/4-20 Jack Nut Inserted Into Filter Top 2) Base Has (2) 7/8" Vents 3) Base Has 1/2" Vent 4) Base Has 1/32" Vent 5) Base Has 1/4" Vent 6) Base Has 11/16" Vent 7) Base Has 1-1/8" Vent 8) Base Has 13/16" Vent 9) Base Has 13/32" Vent 10) Base Has 13/64" Vent 11) Base Has 15/32" Vent 12) Base Has 15/64" Vent 13) Base Has 19/32" Vent 14) Base Has 21/32" Vent 15) Base Has 25/64" Vent 16) Base Has 29/32" Vent 17) Base Has 3/16" Vent 18) Base Has 3/4" Vent 19) Base Has 3/8" Vent 20) Base Has 31/64" Vent 21) Base Has 35/64" Vent 22) Base Has 45/64" Vent 23) Base Has 5/16" Vent 24) Base Has 5/8" Vent 25) Base Has 55/64" Vent 26) Base Has 7/16" Vent 27) Base Has 7/8" Vent 28) Base Has 9/16" Vent 29) Base Has Optional 1/2" Vent 30) Black Powder Coated Top Plate 31) Carbon Fiber Top Plate 32) Filter Has Molded-in Velocity Stack 33) Filter Is Reverse Tapered 34) Fits "Legend/Dwarf" Race Cars w/FJ1200 Motors 35) Galvanized Top Plate 36) Metal Top Plate Has 1/4-20 Stud 37) Metal Top-Plate Has 6MM Stud 38) Offset Is Horizontal 39) Offset Is Vertical 40) Offset Is Vertical And To The Left 41) Offset Is Vertical And To The Right 42) Top Has 1/2" Vent 43) Top Has 1-1/16" Center Hole 44) Top Has 21/32" Center Hole 45) Top Has 23/32" Center Hole 46) Top Has 5/32" Center Hole 47) Top Has 7/16" Vent 48) Top Has Two 0.400" Vents 49) 2-1/4" Adapter Included 50) Tapered Insert Included 5" to 4-3/8"

Round Tapered

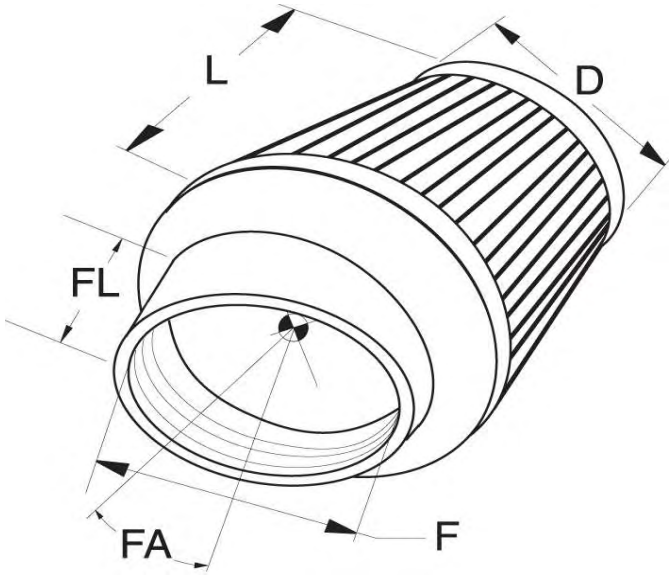

When selecting one of K&N's universal round tapered air filters, you should consider the following dimensions as they relate to the specification chart:

(F) Mounting Flange Inside Diameter - This is the most critical dimension and should be very close to the diameter of the application's inlet flange. The flange will stretch up to 1/16" for those in-between sizes.

(D) Filter Diameter - This is the outside diameter of the filter. Always use the largest diameter practical for maximum filtration.

(L) Filter Length - This dimension is the length of the filter body only, it does not include the flange length. Always use the longest filter practical for maximum filtration.

(FA/FL) Flange Angle and/or Length - If no angle is listed in the specifications table, then the flange is straight. Any angle listed is in degrees and can be utilized when space is a problem.

(FO) Flange Offset - In some cases the center of the flange is offset from the center of the filter base in order to provide a better fit.

(F) Mounting Flange Inside Diameter		(D) Filter Base Diameter		(D) Filter Top Diameter		(L) Filter Length		(FL) Flange Length		(FA) Flange Style		(FO) Flange Offset		Rubber End Cap Part #	Chrome End Cap Part #	Custom End Cap Part #	Filter Wraps Part #
Inch	mm	Inch	mm	Inch	mm	Inch	mm	Inch	mm	Type	Angle	Inch	mm				
1/4	6	1-3/8	35	1	25	1-1/8	29	3/8	10	Centered				RU-5162			
5/16	8	1-3/8	35	1	25	1	25	5/8	16	Centered				RU-3490			
		1-3/8	35	1	25	1-3/8	35	3/8	10	Centered				RU-3170			
1	25	2-7/8	73	3-1/2	89	3-1/2	89	5/8	16	Centered				RE-0200[20]			
1-1/8	29	2-1/4	57	2	51	2-1/2	64	5/8	16	Centered					RC-2540		RC-2540PK
1-1/4	32	2-7/8	73	3-1/2	89	3-1/2	89	5/8	16	Centered				RE-0220[20]			
		2-15/16	75	3-1/2	89	2-7/16	62	5/8	16	Centered				RE-0230[20]			
1-3/8	35	2-1/2	64	2	51	2-1/4	57	5/8	16	Centered					RC-0790		RC-0790PK
1-1/2	38	3	76	3-1/2	89	3-1/2	89	5/8	16	Centered				RE-0240[20]			
1-9/16	40	2-5/8	67	2	51	3	76	5/8	16	Centered					RC-2290		
		3	76	2	51	3	76	5/8	16	Centered					RC-2310		22-8028PK
1-11/16	43	3	76	2	51	2-3/8	60	5/8	16	Centered					RC-2490		
		3	76	2	51	2-3/4	70	5/8	16	Centered				R-1070	RC-1070		22-8028PK
		3	76	2	51	4	102	1-1/2	38	Angled	40°			R-1100			22-8048PK
		3-1/2	89	2	51	4	102	5/8	16	Centered				R-1080			22-8029PK
1-3/4	44	2-15/16	75	3-1/2	89	3-1/2	89	5/8	16	Centered				RE-0260[20]			
		3	76	2	51	2-1/2	64	5/8	16	Centered				RU-2690			
		4-3/8	111	3	76	2-1/2	64	5/8	16	Centered				RU-2680			
		4-1/2	114	3	76	2-1/2	64	5/8	16	Offset		9/16	14	RU-2740			
1-25/32	45	6-7/8	175	5-27/32	148	2-9/16	65	1-25/32	45	Centered					RC-5116		
1-13/16	46	3	76	2	51	2-1/2	64	5/8	16	Centered				RU-2930			22-8028PK
		3	76	2	51	3	76	5/8	16	Centered				RU-2320	RC-2320		22-8028PK
1-7/8	48	3	76	2	51	2	51	5/8	16	Centered				RU-2550	RC-2550		
		3	76	2	51	3	76	5/8	16	Centered				R-1090	RC-1090		22-8028PK
		3	76	2	51	3-11/16	94	1	25	Angled	10°				RC-1290		22-8048PK
1-15/16	49	3	76	2	51	2-1/2	64	5/8	16	Centered				RU-2660	RC-2500		22-8028PK

1) 1/4-20 Jack Nut Inserted Into Filter Top 2) Base Has (2) 7/8" Vents 3) Base Has 1/2" Vent 4) Base Has 1/32" Vent 5) Base Has 1/4" Vent 6) Base Has 11/16" Vent 7) Base Has 1-1/8" Vent 8) Base Has 13/16" Vent 9) Base Has 13/32" Vent 10) Base Has 13/64" Vent 11) Base Has 15/32" Vent 12) Base Has 15/64" Vent 13) Base Has 19/32" Vent 14) Base Has 21/32" Vent 15) Base Has 25/64" Vent 16) Base Has 29/32" Vent 17) Base Has 3/16" Vent 18) Base Has 3/4" Vent 19) Base Has 3/8" Vent 20) Base Has 31/64" Vent 21) Base Has 35/64" Vent 22) Base Has 45/64" Vent 23) Base Has 5/16" Vent 24) Base Has 5/8" Vent 25) Base Has 55/64" Vent 26) Base Has 7/16" Vent 27) Base Has 7/8" Vent 28) Base Has 9/16" Vent 29) Base Has Optional 1/2" Vent 30) Black Powder Coated Top Plate 31) Carbon Fiber Top Plate 32) Filter Has Molded-in Velocity Stack 33) Filter Is Reverse Tapered 34) Fits "Legend/Dwarf" Race Cars w/FJ1200 Motors 35) Galvanized Top Plate 36) Metal Top Plate Has 1/4-20 Stud 37) Metal Top-Plate Has 6MM Stud 38) Offset Is Horizontal 39) Offset Is Vertical 40) Offset Is Vertical And To The Left 41) Offset Is Vertical And To The Right 42) Top Has 1/2" Vent 43) Top Has 1-1/16" Center Hole 44) Top Has 21/32" Center Hole 45) Top Has 23/32" Center Hole 46) Top Has 5/32" Center Hole 47) Top Has 7/16" Vent 48) Top Has Two 0.400" Vents 49) 2-1/4" Adapter Included 50) Tapered Insert Included 5" to 4-3/8"

(F) Mounting Flange Inside Diameter		(D) Filter Base Diameter		(D) Filter Top Diameter		(L) Filter Length		(FL) Flange Length		(FA) Flange Style		(FO) Flange Offset		Rubber End Cap Part #	Chrome End Cap Part #	Custom End Cap Part #	Filter Wraps Part #
Inch	mm	Inch	mm	Inch	mm	Inch	mm	Inch	mm	Type	Angle	Inch	mm				
1-15/16	49	3	76	2	51	3	76	5/8	16	Centered				R-1060	RC-1060		22-8028PK
1-31/32	50	5-3/16	132	3-1/2	89	3-11/32	85	1-3/8	35	Offset		11/16	17			RC-8350[37]	
		5-3/16	132	3-1/2	89	3-9/16	90	1-3/8	35	Offset		21/32	17		RC-9920[34,19]		
		6-27/32	174	5-13/16	148	2-3/8	60	1-25/32	45	Angled	30°				RC-5054		
		6-27/32	174	5-27/32	148	2-9/16	65	1-25/32	45	Offset		13/16	21		RC-1649		
		6-7/8	175	5-27/32	148	2-9/16	65	1-25/32	45	Offset		27/32	21		RC-5124		
2	51	3	76	3-1/2	89	3-1/2	89	5/8	16	Centered				RE-0280[20]			
		3-1/8	79	2	51	3	76	5/8	16	Centered				RU-2580	RC-2580		22-8028PK
		6-27/32	174	5-27/32	148	4-11/32	110	1-25/32	45	Offset		13/16	21		RC-5048[4,17]		
		6-7/8	175	5-27/32	148	2-9/16	65	1-25/32	45	Centered					RC-70018		
2-1/16	52	3-1/4	83	3	76	4	102	5/8	16	Centered					RC-1350		
		3-1/2	89	2	51	4	102	5/8	16	Centered				RU-1200	RC-1200		22-8029PK
		3-1/2	89	3	76	4	102	7/8	22	Centered					RA-050V		
2-1/32	52	3-5/8	92	3-1/2	89	4-7/8	124	7/16	11	Centered					RC-8170		
		6-27/32	174	5-7/8	149	2-9/16	65	1-25/32	45	Offset		27/32	21		RC-5154[42]		
2-1/8	54	3	76	2	51	2-3/4	70	5/8	16	Centered					RC-2340		22-8028PK
		3	76	2	51	3	76	5/8	16	Centered					RC-2330		22-8028PK
		3-1/2	89	2	51	4	102	5/8	16	Centered					RC-1920		22-8029PK
		4-1/2	114	3-1/2	89	4-3/4	121	13/16	21	Centered					RC-4890		
		5-3/16	132	3-1/2	89	5-1/2	140	7/8	22	Offset		19/32	15		RC-8090[44]		
2-1/4	57	3-1/2	89	2	51	4	102	5/8	16	Centered				R-1260	RC-1250		22-8029PK
		5	127	3-1/2	89	3-9/16	90	11/16	17	Centered					RC-9220		
		5-1/8	130	4-5/8	117	6	152	5/8	16	Centered				RU-3560			25-3900
2-9/32	58	4-1/2	114	3-1/2	89	4-15/16	125	2-13/32	61	Centered					RC-5157		
		6-27/32	174	5-13/16	148	2-9/16	65	1-25/32	45	Centered					RC-70021		
2-3/8	60	4-5/8	117	3-1/2	89	4-13/16	122	13/16	21	Centered					RC-9380		
		5-3/16	132	3-1/2	89	3-3/4	95	23/32	18	Offset		17/32	13		RC-1624[36]		
		5-3/16	132	3-1/2	89	4-3/16	106	5/8	16	Offset		19/32	15		RC-9830[6]		
		5-3/16	132	3-1/2	89	4-11/32	110	3/4	19	Offset		19/32	15		RC-8490[18]		
		5-3/16	132	3-1/2	89	4-5/16	110	3/4	19	Offset		21/32	17		RC-9390		
2-13/32	61	4-23/32	120	3-31/32	101	3-3/4	95	3-11/32	85	Centered						RX-5179	
2-7/16	62	3-1/2	89	2	51	5	127	5/8	16	Centered				SN-2570			SN-2570PK
		3-3/4	95	3	76	4	102	2	51	Angled	20°			SN-2530			SN-2530PK
		3-3/4	95	3	76	5	127	2	51	Angled	20°			SN-2520			SN-2520PK
		3-3/4	95	3	76	6	152	2	51	Angled	20°			SN-2510			SN-2510PK
		4-1/2	114	4	102	4-1/32	102	23/32	18	Centered						RX-4010	
		4-1/2	114	4	102	6-1/8	156	7/8	22	Centered						RX-3820-1[1,15]	RX-3820PK
		4-1/2	114	4	102	6-9/16	167	2-15/16	75	Angled	20°					RX-3800[15]	RX-3820PK
		4-1/2	114	6	152	6-1/8	156	7/8	22	Centered						RX-3810XD[1,15]	RX-3810DK
		4-1/2	114	6	152	6-9/16	167	2-7/8	73	Angled	20°					RX-3770[1,15]	RX-3810DK
		5-1/8	130	3-1/2	89	6	152	5/8	16	Centered					RC-4160		RC-4160DK
		5-1/2	140	4-1/2	114	4	102	5/8	16	Offset		1/2	13	R-1380			
2-1/2	64	4-1/2	114	3-1/2	89	3-3/16	81	3/4	19	Centered					RC-8100		
		4-1/2	114	3-1/2	89	5	127	3/4	19	Centered					RC-9630		RC-9350DK
		4-1/2	114	3-1/2	89	6	152	3/4	19	Centered					RC-5062XD		RC-5062DK

1) 1/4-20 Jack Nut Inserted Into Filter Top 2) Base Has (2) 7/8" Vents 3) Base Has 1/2" Vent 4) Base Has 1/32" Vent 5) Base Has 1/4" Vent 6) Base Has 11/16" Vent 7) Base Has 1-1/8" Vent 8) Base Has 13/16" Vent 9) Base Has 13/32" Vent 10) Base Has 13/64" Vent 11) Base Has 15/32" Vent 12) Base Has 15/64" Vent 13) Base Has 19/32" Vent 14) Base Has 21/32" Vent 15) Base Has 25/64" Vent 16) Base Has 29/32" Vent 17) Base Has 3/16" Vent 18) Base Has 3/4" Vent 19) Base Has 3/8" Vent 20) Base Has 31/64" Vent 21) Base Has 35/64" Vent 22) Base Has 45/64" Vent 23) Base Has 5/16" Vent 24) Base Has 5/8" Vent 25) Base Has 55/64" Vent 26) Base Has 7/16" Vent 27) Base Has 7/8" Vent 28) Base Has 9/16" Vent 29) Base Has Optional 1/2" Vent 30) Black Powder Coated Top Plate 31) Carbon Fiber Top Plate 32) Filter Has Molded-in Velocity Stack 33) Filter Is Reverse Tapered 34) Fits "Legend/Dwarf" Race Cars w/FJ1200 Motors 35) Galvanized Top Plate 36) Metal Top Plate Has 1/4-20 Stud 37) Metal Top-Plate Has 6MM Stud 38) Offset Is Horizontal 39) Offset Is Vertical 40) Offset Is Vertical And To The Left 41) Offset Is Vertical And To The Right 42) Top Has 1/2" Vent 43) Top Has 1-1/16" Center Hole 44) Top Has 21/32" Center Hole 45) Top Has 23/32" Center Hole 46) Top Has 5/32" Center Hole 47) Top Has 7/16" Vent 48) Top Has Two 0.400" Vents 49) 2-1/4" Adapter Included 50) Tapered Insert Included 5" to 4-3/8"

Round Tapered

(F) Mounting Flange Inside Diameter		(D) Filter Base Diameter		(D) Filter Top Diameter		(L) Filter Length		(FL) Flange Length		(FA) Flange Style		(FO) Flange Offset		Rubber End Cap Part #	Chrome End Cap Part #	Custom End Cap Part #	Filter Wraps Part #
Inch	mm	Inch	mm	Inch	mm	Inch	mm	Inch	mm	Type	Angle	Inch	mm				
2-17/32	64	4-21/32	118	2-1/2	64	5-29/32	150	7/8	22	Centered					RC-9360		
2-1/2	64	4-21/32	118	3-1/2	89	3-15/16	100	13/16	21	Centered					RC-9080		
		4-21/32	118	3-1/2	89	5-1/2	140	25/32	20	Centered					RC-9800		
		5	127	5-1/2	140	2-3/4	70	5/8	16	Centered						RE-0380	
		5-1/8	130	3-7/16	87	3-3/4	95	3/4	19	Offset		19/32	15		RC-9700		
		5-3/16	132	3-1/2	89	4-17/32	115	3/4	19	Offset		19/32	15			RC-8320[37]	
		5-3/16	132	3-1/2	89	4-9/16	116	3/4	19	Offset		11/16	17		RC-9780		
		5-3/16	132	3-1/2	89	4-11/16	119	3/4	19	Offset		19/32	15		RC-9690[21]		
		5-3/16	132	3-1/2	89	5-5/32	131	5/8	16	Offset		19/32	15		RC-9490		
		5-3/16	132	3-1/2	89	5-15/16	151	3/4	19	Offset		19/32	15		RC-9510[21]		
		5-1/4	133	2-1/2	64	5-3/4	146	1-1/2	38	Angled	20°			RU-5006			
		5-1/4	133	2-1/2	64	5-3/4	146	1-1/2	38	Centered				RU-5005			
		5-1/4	133	3-1/2	89	4-1/2	114	11/16	17	Offset		5/8	16		RC-9420[6]		
		5-3/8	137	5-1/2	140	5-7/8	149	3/4	19	Centered				E-1006			
		5-1/2	140	4-1/2	114	6	152	3/4	19	Centered					RC-4670		RF-1023DK
		6	152	5	127	5	127	2	51	Centered				RU-5174			RX-4990DK
		6	152	5	127	5-1/2	140	2	51	Centered				RU-4950		RX-4950[1]	RX-4990DK
		6	152	5	127	6-1/2	165	2	51	Centered				RU-4860		RX-4860[1]	RX-4730DK
		6-11/16	170	3-1/2	89	7-3/32	180	7/8	22	Offset		1	25		RC-9300		
		6-27/32	174	5-27/32	148	2-9/16	65	1-25/32	45	Angled	30°				RC-5049		
2-9/16	65	6-7/8	175	5-7/8	149	2-1/2	64	1-11/16	43	Offset		7/8	22		RC-4620[4]		
2-5/8	67	5-3/16	132	3-1/2	89	4-1/2	114	3/4	19	Offset		21/32	17		RC-9250		
		5-3/16	132	3-1/2	89	6	152	3/4	19	Offset		1-1/2	38		RC-9340		
2-11/16	68	4-7/16	113	3-1/2	89	4-7/16	113	5/8	16	Centered					RC-9280		
		4-1/2	114	3	76	5	127	5/8	16	Centered					RC-4340		SN-2520PK
		5-3/16	132	3-1/2	89	4-5/16	110	3/4	19	Offset		9/16	14		RC-8070[23]		
		5-3/16	132	3-1/2	89	4-3/8	111	3/4	19	Offset		9/16	14		RC-9400[22,24]		
		5-3/16	132	3-1/2	89	4-7/16	113	3/4	19	Offset		9/16	14		RC-9650[,36]		
		5-3/16	132	3-1/2	89	4-1/2	114	3/4	19	Offset		9/16	14		RC-9580[25]		
		5-3/16	132	3-1/2	89	4-9/16	116	3/4	19	Offset		9/16	14		RC-9440[21]		
		5-3/16	132	3-1/2	89	4-9/16	116	5/8	16	Offset		19/32	15		RC-9560		
		5-3/16	132	3-1/2	89	6	152	3/4	19	Offset		19/32	15		RC-9680[17]		
		5-3/16	132	3-1/2	89	6	152	3/4	19	Offset		9/16	14		RC-9590[17]		
		5-3/16	132	4	102	3-7/16	87	3/4	19	Offset		19/32	15	RU-9160			
		5-25/32	147	3-1/2	89	4-9/16	116	5/8	16	Offset		1/2	13		RC-9730[35,37]		
2-23/32	69	6-11/16	170	3-1/2	89	7-23/32	196	5/8	16	Offset		1	25		RC-9290		
2-3/4	70	3-3/4	95	4	102	5-9/16	141	13/16	21	Centered				RU-5090			RC-9310DK
		4	102	2	51	6	152	1	25	Angled	10°			RU-3120			22-8030DK
		4	102	2	51	7	178	1	25	Angled	10°			RU-3590			
		4	102	3	76	5	127	1	25	Angled	10°			SN-2590			SN-2590PK
		4	102	3	76	6	152	1	25	Angled	10°			SN-2600			SN-2600PK
		4	102	3	76	6	152	2	51	Angled	20°			SN-2620			SN-2620PK
		4-7/16	113	3-1/2	89	4-11/16	119	5/8	16	Centered					RC-9870		
		4-1/2	114	3	76	4	102	5/8	16	Centered				SN-2580			SN-2580PK
		4-11/16	119	3-1/2	89	4-7/8	124	13/16	21	Centered					RC-9350		RC-9350DK

1) 1/4-20 Jack Nut Inserted Into Filter Top 2) Base Has (2) 7/8" Vents 3) Base Has 1/2" Vent 4) Base Has 1/32" Vent 5) Base Has 1/4" Vent 6) Base Has 11/16" Vent 7) Base Has 1-1/8" Vent 8) Base Has 13/16" Vent 9) Base Has 13/32" Vent 10) Base Has 13/64" Vent 11) Base Has 15/32" Vent 12) Base Has 15/64" Vent 13) Base Has 19/32" Vent 14) Base Has 21/32" Vent 15) Base Has 25/64" Vent 16) Base Has 29/32" Vent 17) Base Has 3/16" Vent 18) Base Has 3/4" Vent 19) Base Has 3/8" Vent 20) Base Has 31/64" Vent 21) Base Has 35/64" Vent 22) Base Has 45/64" Vent 23) Base Has 5/16" Vent 24) Base Has 5/8" Vent 25) Base Has 55/64" Vent 26) Base Has 7/16" Vent 27) Base Has 7/8" Vent 28) Base Has 9/16" Vent 29) Base Has Optional 1/2" Vent 30) Black Powder Coated Top Plate 31) Carbon Fiber Top Plate 32) Filter Has Molded-in Velocity Stack 33) Filter Is Reverse Tapered 34) Fits "Legend/Dwarf" Race Cars w/FJ1200 Motors 35) Galvanized Top Plate 36) Metal Top Plate Has 1/4-20 Stud 37) Metal Top-Plate Has 6MM Stud 38) Offset Is Horizontal 39) Offset Is Vertical 40) Offset Is Vertical And To The Left 41) Offset Is Vertical And To The Right 42) Top Has 1/2" Vent 43) Top Has 1-1/16" Center Hole 44) Top Has 21/32" Center Hole 45) Top Has 23/32" Center Hole 46) Top Has 5/32" Center Hole 47) Top Has 7/16" Vent 48) Top Has Two 0.400" Vents 49) 2-1/4" Adapter Included 50) Tapered Insert Included 5" to 4-3/8"

(F) Mounting Flange Inside Diameter		(D) Filter Base Diameter		(D) Filter Top Diameter		(L) Filter Length		(FL) Flange Length		(FA) Flange Style		(FO) Flange Offset		Rubber End Cap Part #	Chrome End Cap Part #	Custom End Cap Part #	Filter Wraps Part #
Inch	mm	Inch	mm	Inch	mm	Inch	mm	Inch	mm	Type	Angle	Inch	mm				
2-3/4	70	4-11/16	119	3-1/2	89	4-15/16	125	13/16	21	Centered					RC-5133		
		4-11/16	119	3-1/2	89	5-5/16	135	13/16	21	Centered					RC-8340		
		4-3/4	121	3-1/2	89	5-7/8	149	13/16	21	Centered					RC-9310		RC-9310DK
		4-3/4	121	4	102	7-7/8	200	13/16	21	Centered					RC-5144		RC-4690DK
		5-1/32	128	3-1/2	89	3-1/4	83	11/16	17	Centered					RC-5127		
		5-1/32	128	3-1/2	89	3-15/16	100	11/16	17	Centered					RC-5128		
		5-1/32	128	3-1/2	89	4-11/32	110	11/16	17	Centered					RC-5135		
		5-1/32	128	3-1/2	89	5-1/2	140	11/16	17	Centered					RC-5131		
		5-3/16	132	3-1/2	89	4-11/32	110	3/4	19	Offset		19/32	15		RC-8410 [17]		
		5-3/16	132	3-1/2	89	4-5/16	110	3/4	19	Offset		1/2	13		RC-4490 [6,23]		
		5-3/16	132	3-1/2	89	4-3/8	111	3/4	19	Offset		17/32	13		RC-9980 [21,22]		
		5-3/16	132	3-1/2	89	4-31/32	126	5/8	16	Offset		19/32	15		RC-8470 [38,40]		
		5-3/16	132	3-1/2	89	5-1/8	130	3/4	19	Offset		11/16	17		RC-4500 [2]		25-3900
		5-1/2	140	4-1/2	114	7	178	2-1/2	64	Angled	30°				RC-4790		25-3900
		5-3/4	146	3-1/2	89	6-11/16	170	3/4	19	Offset		1-1/2	38		RC-1586		
		5-25/32	147	3-1/2	89	4-17/32	115	3/4	19	Offset		1/2	13		RC-9940		
		5-7/8	149	4-1/2	114	5	127	3/4	19	Centered					RC-5284		
		5-7/8	149	4-3/4	121	2-5/8	67	3/4	19	Centered				RU-3390			
		5-7/8	149	4-3/4	121	5	127	3/4	19	Centered				RU-4450			25-3900
		5-7/8	149	4-3/4	121	7	178	3/4	19	Centered				RU-3610			25-3900
		5-7/8	149	5-1/4	133	5	127	3/4	19	Centered						RR-2803	
		6	152	5	127	5-1/2	140	2	51	Centered				RU-4960XD		RX-4960 [1]	RX-4990DK
		6	152	5	127	6-1/2	165	2	51	Centered				RU-4870		RX-4870	RX-4730DK
		6-3/4	171	5-7/8	149	3-1/4	83	3/4	19	Centered					RC-4850 [1]	E-2232	
		6-7/8	175	5-7/8	149	2-5/8	67	3/4	19	Centered					RC-9880		
2-13/16	71	4-7/16	113	3-1/2	89	5	127	3-9/16	90	Centered					RC-4510 [6]		25-3900
		6-7/8	175	5-7/8	149	3-1/8	79	3/4	19	Offset		3/4	19		RC-4640 [4]		
2-27/32	72	4-1/2	114	3-1/2	89	5-29/32	150	3/4	19	Centered					RC-5159		
		5-3/16	132	3-3/4	95	3-3/4	95	3/4	19	Offset		9/16	14	RU-5146			
2-7/8	73	4	102	3	76	5	127	5/8	16	Centered					RC-2600		25-3900
		4-1/4	108	4	102	4-3/4	121	15/16	24	Centered						RX-4020-1 [1]	
		4-1/2	114	3-1/2	89	5-7/8	149	3/4	19	Centered					RC-5136		25-3900
		5-3/16	132	3-1/2	89	4-7/16	113	3/4	19	Offset		15/32	12		RC-4570 [6]		
		5-3/16	132	3-1/2	89	4-1/2	114	2-7/8	73	Offset		1/2	13		RC-8390		
2-29/32	74	4-21/32	118	2-5/16	59	5-29/32	150	23/32	18	Centered				RU-9220			25-3900
2-15/16	75	6-3/4	171	5-7/8	149	3-1/8	79	3/4	19	Offset		13/16	21		RC-4770 [4]		
3	76	4-1/2	114	3-1/2	89	4-5/16	110	3/4	19	Centered					RC-9410		
		4-1/2	114	3-1/2	89	5-3/4	146	3/4	19	Centered				RU-5111			25-3900
		4-1/2	114	6	152	4-5/8	117	7/8	22	Centered						RX-3900-1 [1]	
		5	127	3-1/2	89	4-5/8	117	3/4	19	Centered					RC-9480		
		5	127	3-1/2	89	5-15/16	151	3/4	19	Centered					RC-9640		
		5	127	3-1/2	89	6	152	1-3/4	44	Centered					RF-1039		RC-4160DK
		5	127	4	102	6	152	1-3/4	44	Centered					RC-4650		RC-4650DK
		5	127	4	102	7-7/8	200	1-1/4	32	Centered					RC-4690		RC-4690DK
		5	127	4-1/2	114	5	127	1-3/4	44	Centered					RC-3870		25-3900

1) 1/4-20 Jack Nut Inserted Into Filter Top 2) Base Has (2) 7/8" Vents 3) Base Has 1/2" Vent 4) Base Has 1/32" Vent 5) Base Has 1/4" Vent 6) Base Has 11/16" Vent 7) Base Has 1-1/8" Vent 8) Base Has 13/16" Vent 9) Base Has 13/32" Vent 10) Base Has 13/64" Vent 11) Base Has 15/32" Vent 12) Base Has 15/64" Vent 13) Base Has 19/32" Vent 14) Base Has 21/32" Vent 15) Base Has 25/64" Vent 16) Base Has 29/32" Vent 17) Base Has 3/16" Vent 18) Base Has 3/4" Vent 19) Base Has 3/8" Vent 20) Base Has 31/64" Vent 21) Base Has 35/64" Vent 22) Base Has 45/64" Vent 23) Base Has 5/16" Vent 24) Base Has 5/8" Vent 25) Base Has 55/64" Vent 26) Base Has 7/16" Vent 27) Base Has 7/8" Vent 28) Base Has 9/16" Vent 29) Base Has Optional 1/2" Vent 30) Black Powder Coated Top Plate 31) Carbon Fiber Top Plate 32) Filter Has Molded-in Velocity Stack 33) Filter Is Reverse Tapered 34) Fits "Legend/Dwarf" Race Cars w/FJ1200 Motors 35) Galvanized Top Plate 36) Metal Top Plate Has 1/4-20 Stud 37) Metal Top-Plate Has 6MM Stud 38) Offset Is Horizontal 39) Offset Is Vertical 40) Offset Is Vertical And To The Left 41) Offset Is Vertical And To The Right 42) Top Has 1/2" Vent 43) Top Has 1-1/16" Center Hole 44) Top Has 21/32" Center Hole 45) Top Has 23/32" Center Hole 46) Top Has 5/32" Center Hole 47) Top Has 7/16" Vent 48) Top Has Two 0.400" Vents 49) 2-1/4" Adapter Included 50) Tapered Insert Included 5" to 4-3/8"

Round Tapered

(F) Mounting Flange Inside Diameter		(D) Filter Base Diameter		(D) Filter Top Diameter		(L) Filter Length		(FL) Flange Length		(FA) Flange Style		(FO) Flange Offset		Rubber End Cap Part #	Chrome End Cap Part #	Custom End Cap Part #	Filter Wraps Part #
Inch	mm	Inch	mm	Inch	mm	Inch	mm	Inch	mm	Type	Angle	Inch	mm				
3	76	5	127	4-1/2	114	6-1/2	165	1-13/16	46	Centered					RF-1030		RC-4630DK
		5	127	4-5/8	117	4	102	1-3/4	44	Centered				RU-3700			22-8014PK
		5	127	4-5/8	117	8	203	1-3/4	44	Centered				RE-0910			RE-0910PK
		6	152	3-1/2	89	6	152	1-3/4	44	Centered					RC-4290		
		6	152	4	102	5	127	1-3/4	44	Centered				RU-3580			25-3900
		6	152	4	102	6-3/4	171	1-3/4	44	Centered					RC-4700		RC-4700DK
		6	152	4	102	8-11/16	221	15/16	24	Centered						RX-3990-1 [1]	
		6	152	4-1/2	114	6	152	1-3/4	44	Centered					RC-4180		22-8033PK
		6	152	4-1/2	114	8	203	1-3/4	44	Centered					RC-5106		RC-5106DK
		6	152	4-5/8	117	9	229	1-3/4	44	Centered				RE-0810			25-0810
		6	152	4-5/8	117	12	305	1-3/4	44	Centered				RE-0800			22-8034PK
		6	152	4-5/8	117	14	356	1-3/4	44	Centered				RE-0820			22-8035PK
		6	152	4-3/4	121	6	152	1-3/4	44	Centered				RE-0930			22-8033PK
		6	152	5	127	5	127	2	51	Centered				RU-5176			RX-4990DK
		6	152	5	127	5-9/16	141	1-7/8	48	Centered				RU-4990		RX-4990 [1]	RX-4990DK
		6	152	5	127	6	152	1-3/4	44	Centered						RF-1047	25-3900
		6	152	5	127	6-1/2	165	1-7/8	48	Centered				RU-4730		RX-4730XD [1]	RX-4730DK
		6	152	5-1/8	130	5	127	1-3/4	44	Centered				RU-3570			RX-4990DK
		6	152	5-1/4	133	5	127	1-3/4	44	Centered						RR-3003	
		6	152	5-7/8	149	6	152	1-3/4	44	Centered					RD-1100		
3-1/8	79	4-7/8	124	3-1/2	89	5-7/16	138	23/32	18	Centered					RC-9240		
		4-15/16	125	3-1/2	89	3-15/16	100	3/4	19	Centered					RC-9270		
		4-15/16	125	3-1/2	89	4-5/8	117	3/4	19	Centered					RC-8220		
		5	127	3-1/2	89	6	152	3/4	19	Centered					RC-9320		RC-4160DK
		6	152	4-5/8	117	14	356	1-3/4	44	Centered				RE-0940			
		6	152	5	127	7	178	1-3/4	44	Centered					RC-5100		RC-5100DK
3-5/32	80	4-15/16	125	3-1/2	89	4-11/32	110	15/16	24	Centered					RC-9160		
		4-15/16	125	3-1/2	89	6-21/32	169	3/4	19	Centered					RC-8250		
		5-3/4	146	3-1/2	89	4-7/16	113	3/4	19	Offset		1/2	13		RC-9110 [4]		
		5-25/32	147	3-1/2	89	4-17/32	115	25/32	20	Centered					RC-9670		
		5-25/32	147	3-1/2	89	4-17/32	115	3/4	19	Offset		1/2	13		RC-9910		
		5-25/32	147	3-1/2	89	5-15/32	139	3/4	19	Offset		1/2	13		RC-8370 [40]		
		5-25/32	147	3-1/2	89	7-23/32	196	5/8	16	Centered					RC-9950 [38]		
		6-15/16	176	3-1/2	89	7-27/32	199	3/4	19	Offset		13/32	10		RC-8450		
3-3/16	81	5-5/16	135	3-7/16	87	3-1/16	78	5/8	16	Centered					RC-9720		
3-7/32	82	4-15/16	125	3-1/2	89	5-9/16	141	5/8	16	Centered					RC-9610		
3-1/4	83	5-1/2	140	4-1/2	114	8	203	5/8	16	Centered					RF-1025 [19]		RC-5106DK
		5-1/2	140	4-11/16	119	8	203	1-5/8	41	Centered				RU-5122			RC-5106DK
		5-3/4	146	3-1/2	89	4-25/32	121	3/4	19	Offset		9/16	14		RC-9660 [4]		
		5-3/4	146	3-1/2	89	5-1/2	140	23/32	18	Offset		5/8	16		RC-1637		
		5-3/4	146	3-1/2	89	6-9/16	167	3/4	19	Offset		1/2	13		RC-4470		25-3900
		5-3/4	146	3-1/2	89	6-5/8	168	3/4	19	Offset		1/2	13		RC-4560 [2]		25-3900
3-5/16	84	4-3/4	121	3-1/2	89	4-3/8	111	3/4	19	Centered					RC-9770		
		4-3/4	121	3-1/2	89	6	152	3/4	19	Centered					RC-4540		25-3900
		4-3/4	121	3-1/2	89	6-1/2	165	5/8	16	Centered				RU-2710	RC-2710		25-3900

1) 1/4-20 Jack Nut Inserted Into Filter Top 2) Base Has (2) 7/8" Vents 3) Base Has 1/2" Vent 4) Base Has 1/32" Vent 5) Base Has 1/4" Vent 6) Base Has 11/16" Vent 7) Base Has 1-1/8" Vent 8) Base Has 13/16" Vent 9) Base Has 13/32" Vent 10) Base Has 13/64" Vent 11) Base Has 15/32" Vent 12) Base Has 15/64" Vent 13) Base Has 19/32" Vent 14) Base Has 21/32" Vent 15) Base Has 25/64" Vent 16) Base Has 29/32" Vent 17) Base Has 3/16" Vent 18) Base Has 3/4" Vent 19) Base Has 3/8" Vent 20) Base Has 31/64" Vent 21) Base Has 35/64" Vent 22) Base Has 45/64" Vent 23) Base Has 5/16" Vent 24) Base Has 5/8" Vent 25) Base Has 55/64" Vent 26) Base Has 7/16" Vent 27) Base Has 7/8" Vent 28) Base Has 9/16" Vent 29) Base Has Optional 1/2" Vent 30) Black Powder Coated Top Plate 31) Carbon Fiber Top Plate 32) Filter Has Molded-in Velocity Stack 33) Filter Is Reverse Tapered 34) Fits "Legend/Dwarf" Race Cars w/FJ1200 Motors 35) Galvanized Top Plate 36) Metal Top Plate Has 1/4-20 Stud 37) Metal Top-Plate Has 6MM Stud 38) Offset Is Horizontal 39) Offset Is Vertical 40) Offset Is Vertical And To The Left 41) Offset Is Vertical And To The Right 42) Top Has 1/2" Vent 43) Top Has 1-1/16" Center Hole 44) Top Has 21/32" Center Hole 45) Top Has 23/32" Center Hole 46) Top Has 5/32" Center Hole 47) Top Has 7/16" Vent 48) Top Has Two 0.400" Vents 49) 2-1/4" Adapter Included 50) Tapered Insert Included 5" to 4-3/8"

(F) Mounting Flange Inside Diameter		(D) Filter Base Diameter		(D) Filter Top Diameter		(L) Filter Length		(FL) Flange Length		(FA) Flange Style		(FO) Flange Offset		Rubber End Cap Part #	Chrome End Cap Part #	Custom End Cap Part #	Filter Wraps Part #
Inch	mm	Inch	mm	Inch	mm	Inch	mm	Inch	mm	Type	Angle	Inch	mm				
3-5/16	84	4-7/8	124	4	102	4-1/4	108	15/16	24	Centered						RX-4120-1 [1]	
		5-13/16	148	3-1/2	89	6-9/32	160	7/8	22	Offset		1/2	13		RC-8110 [42]		
3-11/32	85	4-15/16	125	3-1/2	89	4-9/16	116	5/8	16	Centered					RC-9790		
3-3/8	86	5-3/4	146	3-1/2	89	4-1/4	108	3/4	19	Offset		9/16	14		RC-8200 [3,4]		
		5-3/4	146	3-1/2	89	4-7/16	113	3/4	19	Offset		9/16	14		RC-9970 [4]		
		5-3/4	146	3-1/2	89	4-7/8	124	3/4	19	Offset		9/16	14		RC-8000 [18]		
		5-3/4	146	3-1/2	89	5-7/16	138	3/4	19	Offset		5/8	16		RC-9120 [,35]		
		5-3/4	146	3-1/2	89	6-15/16	176	3/4	19	Offset		9/16	14		RC-8150		
		5-13/16	148	4	102	6	152	5/8	16	Centered				RU-5168			RU-5168DK
		6	152	4-1/2	114	9	229	3/4	19	Centered						RP-5118	RC-3690DK
3-13/32	87	5-13/16	148	3-1/2	89	7-27/32	199	3/4	19	Offset		1	25		RC-8260 [38]		
3-1/2	89	4-5/8	117	3-1/2	89	3	76	5/8	16	Centered				RU-4410			
		4-5/8	117	3-1/2	89	4-1/2	114	5/8	16	Centered				RU-2790			
		4-5/8	117	3-1/2	89	5-1/2	140	5/8	16	Centered				RU-3550			25-3900
		4-5/8	117	3-1/2	89	7	178	5/8	16	Centered				RU-3130			RU-3130DK
		5	127	3-1/2	89	4	102	5/8	16	Centered				RU-2990			
		5	127	5-1/8	130	2	51	5/8	16	Centered					RC-4230 [16]		
		5-1/2	140	4	102	8	203	1-1/4	32	Centered					RF-1045		RF-1045DK
		5-1/2	140	4-1/2	114	6-1/2	165	1-1/4	32	Centered					RC-4630XD	RP-4630	RC-4630DK
		5-1/2	140	4-1/2	114	8	203	1-1/4	32	Centered					RC-4760		RC-5106DK
		5-3/4	146	3-1/2	89	6	152	1-3/4	44	Angled	10°				RF-1035		RF-1035DK
		5-3/4	146	3-3/4	95	6	152	1-3/4	44	Angled	10°			RF-1031			RU-5168DK
		5-3/4	146	4-1/2	114	6	152	1-3/4	44	Angled	10°				RF-1023		22-8033PK
		5-3/4	146	5	127	7	178	1-3/4	44	Angled	10°				RF-1016 [2]		25-3900
		5-3/4	146	5	127	8	203	1-3/4	44	Angled	10°				RF-1003 [2]		
		5-3/4	146	5	127	12-1/8	308	1-3/4	44	Angled	10°				RF-1004 [2]		
		6	152	4-1/2	114	9	229	1-3/4	44	Centered					RC-3690		RC-3690DK
		6	152	4-5/8	117	6	152	1-3/4	44	Centered				RE-0950			22-8033PK
		6	152	4-5/8	117	9	229	1-3/4	44	Centered				RE-0920			RE-0810PK
		8	203	6-5/8	168	8	203	1-1/2	38	Centered				RC-5112 [29,31]			RC-5112DK
		8	203	7	178	12-1/2	318	1-1/2	38	Centered					RC-5165		RC-5165DK
3-5/8	92	4	102	3-3/4	95	6	152	5/8	16	Centered				RD-6010			
3-3/4	95	5-3/8	137	4-3/8	111	5	127	5/8	16	Centered				RU-4250			25-3900
		5-3/8	137	4-3/8	111	7	178	5/8	16	Centered				RU-3530			RU-2590DK
		5-3/4	146	3-1/2	89	6-3/4	171	3/4	19	Offset		7/16	11		RC-8480		25-3900
3-13/16	97	6-13/16	173	6	152	2-1/8	54	3/4	19	Centered						RX-4130-1 [1]	
3-7/8	98	4-1/4	108	3-1/2	89	4-1/4	108	7/16	11	Centered				RD-6020			
		4-1/4	108	4	102	6	152	7/16	11	Centered				RD-6000			22-8031PK
		5-1/2	140	2-7/8	73	3-9/32	83	3/4	19	Centered						RC-5153	
		6-3/4	171	5-7/8	149	2-3/4	70	3/4	19	Offset		3/8	10		RC-4840 [4]		
3-27/32	98	6-7/8	175	5-7/8	149	2-25/32	71	3/4	19	Offset		7/16	11		RC-9600		
		6-7/8	175	5-7/8	149	3-3/16	81	3/4	19	Offset		13/32	10		RC-9990 [24]		
		6-15/16	176	3-1/2	89	2-11/16	68	3/4	19	Centered					RC-9520		
3-7/8	98	6-15/16	176	3-1/2	89	7-23/32	196	5/8	16	Offset		3/8	10		RC-9540		
3-27/32	98	6-15/16	176	5-13/16	148	3-5/32	80	3/4	19	Offset		197/5	10		RC-9860 [14]		

1) 1/4-20 Jack Nut Inserted Into Filter Top 2) Base Has (2) 7/8" Vents 3) Base Has 1/2" Vent 4) Base Has 1/32" Vent 5) Base Has 1/4" Vent 6) Base Has 11/16" Vent 7) Base Has 1-1/8" Vent 8) Base Has 13/16" Vent 9) Base Has 13/32" Vent 10) Base Has 13/64" Vent 11) Base Has 15/32" Vent 12) Base Has 15/64" Vent 13) Base Has 19/32" Vent 14) Base Has 21/32" Vent 15) Base Has 25/64" Vent 16) Base Has 29/32" Vent 17) Base Has 3/16" Vent 18) Base Has 3/4" Vent 19) Base Has 3/8" Vent 20) Base Has 31/64" Vent 21) Base Has 35/64" Vent 22) Base Has 45/64" Vent 23) Base Has 5/16" Vent 24) Base Has 5/8" Vent 25) Base Has 55/64" Vent 26) Base Has 7/16" Vent 27) Base Has 7/8" Vent 28) Base Has 9/16" Vent 29) Base Has Optional 1/2" Vent 30) Black Powder Coated Top Plate 31) Carbon Fiber Top Plate 32) Filter Has Molded-in Velocity Stack 33) Filter Is Reverse Tapered 34) Fits "Legend/Dwarf" Race Cars w/FJ1200 Motors 35) Galvanized Top Plate 36) Metal Top Plate Has 1/4-20 Stud 37) Metal Top-Plate Has 6MM Stud 38) Offset Is Horizontal 39) Offset Is Vertical 40) Offset Is Vertical And To The Left 41) Offset Is Vertical And To The Right 42) Top Has 1/2" Vent 43) Top Has 1-1/16" Center Hole 44) Top Has 21/32" Center Hole 45) Top Has 23/32" Center Hole 46) Top Has 5/32" Center Hole 47) Top Has 7/16" Vent 48) Top Has Two 0.400" Vents 49) 2-1/4" Adapter Included 50) Tapered Insert Included 5" to 4-3/8"

Round Tapered

(F) Mounting Flange Inside Diameter		(D) Filter Base Diameter		(D) Filter Top Diameter		(L) Filter Length		(FL) Flange Length		(FA) Flange Style		(FO) Flange Offset		Rubber End Cap Part #	Chrome End Cap Part #	Custom End Cap Part #	Filter Wraps Part #
Inch	mm	Inch	mm	Inch	mm	Inch	mm	Inch	mm	Type	Angle	Inch	mm				
3-7/8	98	7-1/2	191	5-1/8	130	7	178	1-1/2	38	Centered					RF-1029		RF-1029DK
3-29/32	99	7-1/2	191	4-7/16	113	6-5/16	160	1-15/32	37	Centered					RC-1620		
3-15/16	100	5-7/16	138	4-1/2	114	3-5/8	92	3/4	19	Centered					RC-5057		
		5-7/16	138	4-1/2	114	5	127	11/16	17	Centered					RC-5156		
		5-7/16	138	4-1/2	114	5-15/16	151	11/16	17	Centered					RC-5058		
		5-7/16	138	4-1/2	114	6-5/8	168	23/32	18	Centered						RF-1633[47]	
		5-7/16	138	4-17/32	115	4-1/2	114	23/32	18	Centered						RC-5059	
		5-1/2	140	4-1/2	114	5-15/16	151	3/4	19	Centered					RC-5053		
4	102	5-3/8	137	3-1/2	89	6	152	5/8	16	Centered				RU-5141[35]			RP-4660DK
		5-3/8	137	4	102	5-1/16	129	5/8	16	Centered						RP-4930	RP-4660DK
		5-3/8	137	4	102	5-1/2	140	5/8	16	Centered						RP-4660	RP-4660DK
		5-3/8	137	4	102	6-1/2	165	5/8	16	Centered					RC-5149	RP-4980	RC-5149DK
		5-3/8	137	4	102	7	178	5/8	16	Centered						RP-4970	22-8032PK
		5-3/8	137	4-3/8	111	3-1/2	89	5/8	16	Centered				RU-2510			
		5-3/8	137	4-3/8	111	5	127	5/8	16	Centered				RU-2520			25-3900
		5-3/8	137	4-3/8	111	7	178	5/8	16	Centered				RU-2590			RU-2590DK
		5-3/8	137	4-1/2	114	5	127	5/8	16	Centered					RC-3600		25-3900
		5-3/8	137	4-1/2	114	6	152	5/8	16	Centered					RF-1049[3]		RF-1023DK
		5-3/8	137	4-1/2	114	7-1/2	191	5/8	16	Centered					RF-1007[2]		
		5-3/8	137	4-1/2	114	8	203	5/8	16	Centered					RC-4580		
		5-3/8	137	5	127	6-1/2	165	5/8	16	Centered					RF-1018[2,26]		25-3900
		5-7/16	138	4-17/32	115	6-5/8	168	23/32	18	Centered						RF-1682	
		6	152	4	102	7	178	1-3/4	44	Centered					RC-4680		RF-1032DK
		6	152	4	102	8	203	1-3/4	44	Centered					RF-1046		
		6	152	4-1/2	114	7	178	5/8	16	Centered				RF-1015			RF-1015DK
		6	152	4-5/8	117	9	229	1-3/4	44	Centered				RE-0870			25-0810
		6	152	4-5/8	117	12	305	1-3/4	44	Centered				RE-0860			22-8034PK
		6	152	4-5/8	117	14	356	1-3/4	44	Centered				RE-0880			22-8035PK
		6	152	4-3/4	121	5-1/2	140	1-1/8	29	Centered					RG-1001RD		
		6	152	4-3/4	121	8-5/8	219	1	25	Centered				E-1997			
		6-1/2	165	4-1/2	114	6	152	1-3/4	44	Centered					RC-5060		RC-5060DK
		6-1/2	165	4-1/2	114	7	178	1-3/4	44	Centered					RF-1032		RF-1032DK
		6-1/2	165	4-1/2	114	8	203	1-3/4	44	Centered					RF-1027		RF-1027DK
		6-5/8	168	5-1/4	133	9-1/2	241	1-11/16	43	Centered						RC-4780[2,29,30]	RC-4780DK
		6-3/4	171	5-7/8	149	9-1/2	241	1-3/4	44	Centered				RU-5045			RU-5045DK
		6-7/8	175	5-7/8	149	2-3/4	70	3/4	19	Offset		1/2	13		RC-9500[19]		
		6-15/16	176	5-7/8	149	3-3/4	95	5/8	16	Offset		3/8	10		RC-9470[45]		
		8	203	6-5/8	168	12	305	1-1/2	38	Centered						RC-5171	25-5166
4-1/16	103	6-7/8	175	5-7/8	149	2-3/16	56	3/4	19	Offset		15/32	12		RC-4480[4]		
4-1/8	105	7-3/8	187	6-5/8	168	7-7/8	200	1-1/8	29	Centered						RC-4900[29,31]	RC-4900DK
		7-3/8	187	7	178	11-1/2	292	1-1/8	29	Centered					RC-5181		RF-1026DK
4-1/4	108	5-7/8	149	4-1/2	114	6-3/4	171	5/8	16	Centered						RP-5167	RF-1037DK
4-5/16	110	5-1/2	140	3-1/2	89	3-3/8	86	5/8	16	Centered					RC-9460		
		5-1/2	140	3-1/2	89	4-3/8	111	5/8	16	Centered					RC-9890		
4-3/8	111	5-1/2	140	3-1/2	89	5-3/16	132	15/16	24	Centered					RC-9210		

1) 1/4-20 Jack Nut Inserted Into Filter Top 2) Base Has (2) 7/8" Vents 3) Base Has 1/2" Vent 4) Base Has 1/32" Vent 5) Base Has 1/4" Vent 6) Base Has 11/16" Vent 7) Base Has 1-1/8" Vent 8) Base Has 13/16" Vent 9) Base Has 13/32" Vent 10) Base Has 13/64" Vent 11) Base Has 15/32" Vent 12) Base Has 15/64" Vent 13) Base Has 19/32" Vent 14) Base Has 21/32" Vent 15) Base Has 25/64" Vent 16) Base Has 29/32" Vent 17) Base Has 3/16" Vent 18) Base Has 3/4" Vent 19) Base Has 3/8" Vent 20) Base Has 31/64" Vent 21) Base Has 35/64" Vent 22) Base Has 45/64" Vent 23) Base Has 5/16" Vent 24) Base Has 5/8" Vent 25) Base Has 55/64" Vent 26) Base Has 7/16" Vent 27) Base Has 7/8" Vent 28) Base Has 9/16" Vent 29) Base Has Optional 1/2" Vent 30) Black Powder Coated Top Plate 31) Carbon Fiber Top Plate 32) Filter Has Molded-in Velocity Stack 33) Filter Is Reverse Tapered 34) Fits "Legend/Dwarf" Race Cars w/FJ1200 Motors 35) Galvanized Top Plate 36) Metal Top Plate Has 1/4-20 Stud 37) Metal Top-Plate Has 6MM Stud 38) Offset Is Horizontal 39) Offset Is Vertical 40) Offset Is Vertical And To The Left 41) Offset Is Vertical And To The Right 42) Top Has 1/2" Vent 43) Top Has 1-1/16" Center Hole 44) Top Has 21/32" Center Hole 45) Top Has 23/32" Center Hole 46) Top Has 5/32" Center Hole 47) Top Has 7/16" Vent 48) Top Has Two 0.400" Vents 49) 2-1/4" Adapter Included 50) Tapered Insert Included 5" to 4-3/8"

(F) Mounting Flange Inside Diameter		(D) Filter Base Diameter		(D) Filter Top Diameter		(L) Filter Length		(FL) Flange Length		(FA) Flange Style		(FO) Flange Offset		Rubber End Cap Part #	Chrome End Cap Part #	Custom End Cap Part #	Filter Wraps Part #
Inch	mm	Inch	mm	Inch	mm	Inch	mm	Inch	mm	Type	Angle	Inch	mm				
4-3/8	111	6	152	4-5/8	117	6-1/2	165	1-1/4	32	Angled	10°			RU-5061			RX-4990DK
4-13/32	112	5-19/32	142	5-11/32	136	5-31/32	152	29/32	23	Centered					RC-1645		
4-1/2	114	5-7/8	149	4	102	6	152	5/8	16	Centered						RP-5101	RU-5168DK
		5-7/8	149	4-1/2	114	4-1/2	114	5/8	16	Centered					RF-1005		
		5-7/8	149	4-1/2	114	5	127	5/8	16	Centered						RT-4610	25-3900
		5-7/8	149	4-1/2	114	6	152	5/8	16	Centered				RU-4740		RP-4740	RF-1023DK
		5-7/8	149	4-1/2	114	8-3/8	213	5/8	16	Centered					RF-1008		RC-5106DK
		5-7/8	149	5	127	3-1/4	83	5/8	16	Centered				RU-3110			
		5-7/8	149	5	127	6	152	5/8	16	Centered				RU-3480			RU-3480PK
		5-7/8	149	5-1/8	130	5	127	5/8	16	Centered				RU-4260			25-3900
		8	203	6-5/8	168	8	203	1-3/8	35	Centered						RC-5283 [29,31]	RC-5112DK
		8	203	6-5/8	168	12	305	1-3/8	35	Centered						RC-5166	25-5166
4-7/8	124	9	229	6-5/8	168	7-15/16	202	1-1/4	32	Centered				RU-5172			RC-5139DK
5	127	6-1/2	165	4-3/8	111	7	178	1	25	Centered				RU-2800			25-3900
		6-1/2	165	4-1/2	114	4-1/8	105	1	25	Centered				RU-5163			RU-5163DK
		6-1/2	165	4-1/2	114	5-1/2	140	1	25	Centered				RU-5147			RU-5147DK
		6-1/2	165	4-1/2	114	5-5/8	143	1	25	Centered						RP-5113	RU-5147DK
		6-1/2	165	5	127	6-1/2	165	1	25	Centered					RF-1037		RF-1037DK
		6-1/2	165	6-3/4	171	5	127	1	25	Centered				RU-5109			25-3900
5-5/8	143	7-1/2	191	5-3/4	146	8	203	1-1/8	29	Centered				E-1993			
6	152	7-1/2	191	4-1/2	114	4	102	1	25	Centered				RU-4600		RT-4600	22-8036PK
		7-1/2	191	4-1/2	114	5	127	1	25	Centered						RT-4590	22-8049DK
		7-1/2	191	4-1/2	114	5	127	5/8	16	Centered					RC-5138		22-8049DK
		7-1/2	191	4-1/2	114	6	152	5/8	16	Centered					RF-1048		RF-1048DK
		7-1/2	191	4-1/2	114	6-1/2	165	5/8	16	Centered					RC-5107		RC-5107DK
		7-1/2	191	4-1/2	114	9	229	5/8	16	Centered					RC-5046		RC-5046DK
		7-1/2	191	5	127	4	102	1	25	Centered					RF-1009		22-8036PK
		7-1/2	191	5	127	5	127	1	25	Centered					RC-2960XD		22-8049DK
		7-1/2	191	5	127	6	152	1	25	Centered				RU-3100	RF-1036	RP-5168	RF-1036DK
		7-1/2	191	5	127	6	152	5/8	16	Centered					RF-1043		22-8037PK
		7-1/2	191	5	127	6-1/2	165	1	25	Centered					RF-1042XD		RF-1042DK
		7-1/2	191	5	127	7-1/2	191	1	25	Centered					RF-1041		RF-1041DK
		7-1/2	191	5	127	8	203	1	25	Centered				RU-3050	RF-1020		RF-1020DK
		7-1/2	191	5	127	8	203	5/8	16	Centered					RF-1044XD		RF-1020DK
		7-1/2	191	5	127	10	254	1	25	Centered				RU-3280			
		7-1/2	191	5-7/8	149	3	76	1	25	Centered					RF-1028		RF-1028DK
		7-1/2	191	5-7/8	149	6	152	1	25	Centered					RC-4940		RC-5173DK
		7-1/2	191	5-7/8	149	6	152	5/8	16	Centered					RC-5173		RC-5173DK
		7-1/2	191	5-7/8	149	6-1/2	165	1	25	Centered					RF-1014		RF-1014DK
		7-1/2	191	7	178	4	102	1	25	Centered					RF-1010 [2]		
		7-1/2	191	7	178	8	203	1	25	Centered					RF-1017 [2]		22-8050PK
		7-1/2	191	7	178	11	279	1	25	Centered					RF-1026		RF-1026DK
		7-1/2	191	7	178	18	457	1	25	Centered					RC-3070 [2]		RC-3070DK
		9	229	6-5/8	168	7-1/2	191	1-1/8	29	Centered						RC-5282 [48]	RC-5139DK

1) 1/4-20 Jack Nut Inserted Into Filter Top 2) Base Has (2) 7/8" Vents 3) Base Has 1/2" Vent 4) Base Has 1/32" Vent 5) Base Has 1/4" Vent 6) Base Has 11/16" Vent 7) Base Has 1-1/8" Vent 8) Base Has 13/16" Vent 9) Base Has 13/32" Vent 10) Base Has 13/64" Vent 11) Base Has 15/32" Vent 12) Base Has 15/64" Vent 13) Base Has 19/32" Vent 14) Base Has 21/32" Vent 15) Base Has 25/64" Vent 16) Base Has 29/32" Vent 17) Base Has 3/16" Vent 18) Base Has 3/4" Vent 19) Base Has 3/8" Vent 20) Base Has 31/64" Vent 21) Base Has 35/64" Vent 22) Base Has 45/64" Vent 23) Base Has 5/16" Vent 24) Base Has 5/8" Vent 25) Base Has 55/64" Vent 26) Base Has 7/16" Vent 27) Base Has 7/8" Vent 28) Base Has 9/16" Vent 29) Base Has Optional 1/2" Vent 30) Black Powder Coated Top Plate 31) Carbon Fiber Top Plate 32) Filter Has Molded-in Velocity Stack 33) Filter Is Reverse Tapered 34) Fits "Legend/Dwarf" Race Cars w/FJ1200 Motors 35) Galvanized Top Plate 36) Metal Top Plate Has 1/4-20 Stud 37) Metal Top-Plate Has 6MM Stud 38) Offset Is Horizontal 39) Offset Is Vertical 40) Offset Is Vertical And To The Left 41) Offset Is Vertical And To The Right 42) Top Has 1/2" Vent 43) Top Has 1-1/16" Center Hole 44) Top Has 21/32" Center Hole 45) Top Has 23/32" Center Hole 46) Top Has 5/32" Center Hole 47) Top Has 7/16" Vent 48) Top Has Two 0.400" Vents 49) 2-1/4" Adapter Included 50) Tapered Insert Included 5" to 4-3/8"

Oval Straight

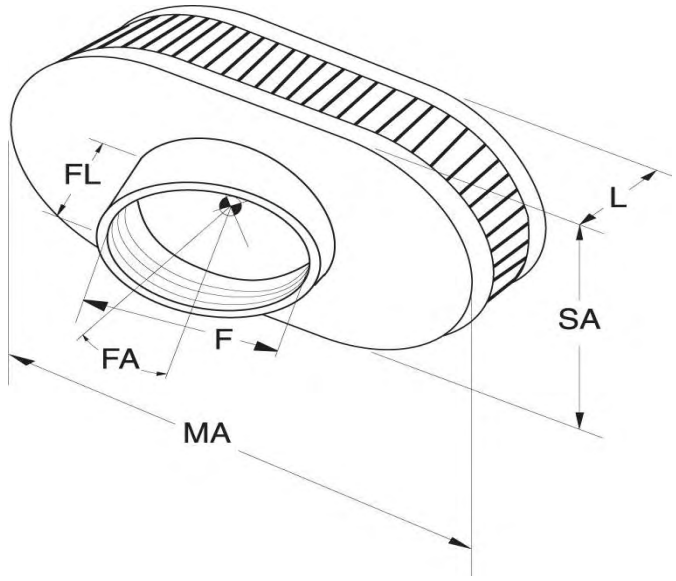

When selecting one of K&N's universal oval air filters, you should consider the following dimensions as they relate to the specification chart:

(F) Mounting Flange Inside Diameter - This is the most critical dimension and should be very close to the diameter of the application's inlet flange. The flange will stretch up to 1/16" for those in-between sizes.

(MA / SA) Filter Oval Dimensions - This is the length and width of the filter. Always use the largest filter practical to fit the application.

(L) Filter Length - This dimension is the length of the filter body only, it does not include the flange length. Always use the longest filter practical for maximum filtration.

(FA / FL) Flange Angle and/or Length - If no angle is listed in the specifications table, then the flange is straight. Any angle listed is in degrees and can be utilized when space is a problem.

(FO) Flange Offset - In some cases the center of the flange is offset from the center of the filter base in order to provide a better fit.

(F) Mounting Flange Inside Diameter		(MA/SA) Filter Dimensions		(L) Filter Length		(FL) Flange Length		(FA) Flange Style		(FO) Flange Offset		Rubber End Cap Part #	Chrome End Cap Part #	Filter Wraps [14] Part #
Inch	mm	Inch	mm	Inch	mm	Inch	mm	Type	Angle	Inch	mm			
4-15/32	114	5-1/2x7-7/16	140x189	9-21/32	245	7-1/2	191	Centered				E-9281		
1-1/2	38	3-3/4x4-1/2	95x114	2-3/4	70	1	25	Angled	30°			R-0640		
2-1/16	52	4-1/2x7	114x178	1-1/2	38	7/8	22	Offset		1/2	13	RA-0700 [5]	RA-070V [5]	22-2000PL
		4-1/2x7	114x178	2	51	7/8	22	Offset		1/2	13	RA-0710 [5]	RA-071V [5]	22-2000PL
		4-1/2x7	114x178	3	76	7/8	22	Offset		1/2	13	RA-0720 [5]	RA-072V [5]	22-2020PL
2-1/4	57	4x6-1/4	102x159	4-1/2	114	1	25	Angled	10°			RU-1320		
		4x6-1/4	102x159	6	152	1	25	Angled	10°			RU-1330		
		3-3/4x4-1/2	95x114	4	102	5/8	16	Centered				RU-0990		
		3-3/4x4-1/2	95x114	5	127	5/8	16	Centered				RU-1100		
		3-3/4x4-1/2	95x114	5	127	1	25	Angled	10°			RU-1140		
		3-3/4x4-1/2	95x114	6	152	1	25	Angled	10°			RU-1150		RU-1230PK
		3-3/4x4-1/2	95x114	2	51	5/8	16	Centered				R-1390		22-8023PK
2-7/16	62	4x6-1/4	102x159	4-1/2	114	1	25	Angled	10°			RU-1340		
		4x6-1/4	102x159	5	127	1	25	Angled	10°			RU-1350		
		4x6-1/4	102x159	6	152	1	25	Angled	10°			RU-1360		
		4-1/2x7	114x178	2	51	5/8	16	Centered					RC-1980	22-2000PL
		3-3/4x4-1/2	95x114	5	127	5/8	16	Centered				RU-1180		
		3-3/4x4-1/2	95x114	5	127	1	25	Angled	10°			RU-1220		
		3-3/4x4-1/2	95x114	5	127	1-1/4	32	Angled	20°			RU-1371 [21]		
		3-3/4x4-1/2	95x114	6	152	1	25	Angled	10°			RU-1230		RU-1230PK
		3-3/4x4-1/2	95x114	6	152	1-1/4	32	Angled	20°			RU-1380		RU-1230PK
		3-3/4x4-1/2	95x114	7	178	5/8	16	Centered				RU-1810		RU-1240PK
		3-3/4x4-1/2	95x114	7	178	1	25	Angled	10°			RU-1240		RU-1240PK
		3-3/4x4-1/2	95x114	7	178	1-1/4	32	Angled	20°			RU-1390		RU-1240PK
		3-3/4x4-1/2	95x114	9	229	1	25	Angled	10°			RU-1260		RU-1260PK
2-1/2	64	3-3/4x4-1/2	95x114	7	178	2-1/8	54	Angled	10°			RU-1830		RU-1240PK

1) 1/4-20 Jack Nut Inserted Into Filter Top 2) Base Has (2) 7/8" Vents 3) Base Has 1/2" Vent 4) Base Has 1/32" Vent 5) Base Has 1/4" Vent 6) Base Has 11/16" Vent 7) Base Has 1-1/8" Vent 8) Base Has 13/16" Vent 9) Base Has 13/32" Vent 10) Base Has 13/64" Vent 11) Base Has 15/32" Vent 12) Base Has 15/64" Vent 13) Base Has 19/32" Vent 14) Base Has 21/32" Vent 15) Base Has 25/64" Vent 16) Base Has 29/32" Vent 17) Base Has 3/16" Vent 18) Base Has 3/4" Vent 19) Base Has 3/8" Vent 20) Base Has 31/64" Vent 21) Base Has 35/64" Vent 22) Base Has 45/64" Vent 23) Base Has 5/16" Vent 24) Base Has 5/8" Vent 25) Base Has 55/64" Vent 26) Base Has 7/16" Vent 27) Base Has 7/8" Vent 28) Base Has 9/16" Vent 29) Base Has Optional 1/2" Vent 30) Black Powder Coated Top Plate 31) Carbon Fiber Top Plate 32) Filter Has Molded-in Velocity Stack 33) Filter Is Reverse Tapered 34) Fits "Legend/Dwarf" Race Cars w/FJ1200 Motors 35) Galvanized Top Plate 36) Metal Top Plate Has 1/4-20 Stud 37) Metal Top-Plate Has 6MM Stud 38) Offset Is Horizontal 39) Offset Is Vertical 40) Offset Is Vertical And To The Left 41) Offset Is Vertical And To The Right 42) Top Has 1/2" Vent 43) Top Has 1-1/16" Center Hole 44) Top Has 21/32" Center Hole 45) Top Has 23/32" Center Hole 46) Top Has 5/32" Center Hole 47) Top Has 7/16" Vent 48) Top Has Two 0.400" Vents 49) 2-1/4" Adapter Included 50) Tapered Insert Included 5" to 4-3/8"

Oval Straight

(F) Mounting Flange Inside Diameter		(MA/SA) Filter Dimensions		(L) Filter Length		(FL) Flange Length		(FA) Flange Style		(FO) Flange Offset		Rubber End Cap Part #	Chrome End Cap Part #	Filter Wraps [14] Part #
Inch	mm	Inch	mm	Inch	mm	Inch	mm	Type	Angle	Inch	mm			
2-1/2	64	3-3/4x4-1/2	95x114	9	229	2-1/8	54	Angled	10°			RU-1840		RU-1260PK
2-9/16	65	4-1/2x7	114x178	1-1/2	38	7/8	22	Offset		1/2	13	RA-0750	RA-075V	22-2000PL
		4-1/2x7	114x178	2	51	7/8	22	Offset		1/2	13	RA-0760	RA-076V	22-2000PL
		4-1/2x7	114x178	3	76	7/8	22	Offset		1/2	13	RA-0770	RA-077V	22-2020PL
2-11/16	68	5-5/16x8-7/8	135x225	1-7/8	48	9/16	14	Centered					RC-9000	
2-3/4	70	4x6-1/4	102x159	5	127	5/8	16	Centered				RU-1500	RC-1500	
		4x6-1/4	102x159	5	127	1	25	Angled	10°			RU-1530		
		4x6-1/4	102x159	6	152	1	25	Angled	10°			RU-1540	RC-1540	
		4x6-1/4	102x159	7	178	5/8	16	Centered				RU-1520	RC-1520	
		4x6-1/4	102x159	7	178	1	25	Angled	10°			RU-1550		
		4-1/2x7	114x178	2	51	5/8	16	Centered					RC-2000	22-2000PL
		4-1/2x7	114x178	3	76	5/8	16	Centered					RC-2860	22-2020PL
3-1/2	89	4-1/2x7	114x178	7	178	5/8	16	Centered				RU-3620		
		4-1/2x7	114x178	3-1/2	89	5/8	16	Centered					RC-3180	E-3341PK

1) 1/4-20 Jack Nut Inserted Into Filter Top 2) Base Has (2) 7/8" Vents 3) Base Has 1/2" Vent 4) Base Has 1/32" Vent 5) Base Has 1/4" Vent 6) Base Has 11/16" Vent 7) Base Has 1-1/8" Vent 8) Base Has 13/16" Vent 9) Base Has 13/32" Vent 10) Base Has 13/64" Vent 11) Base Has 15/32" Vent 12) Base Has 15/64" Vent 13) Base Has 19/32" Vent 14) Base Has 21/32" Vent 15) Base Has 25/64" Vent 16) Base Has 29/32" Vent 17) Base Has 3/16" Vent 18) Base Has 3/4" Vent 19) Base Has 3/8" Vent 20) Base Has 31/64" Vent 21) Base Has 35/64" Vent 22) Base Has 45/64" Vent 23) Base Has 5/16" Vent 24) Base Has 5/8" Vent 25) Base Has 55/64" Vent 26) Base Has 7/16" Vent 27) Base Has 7/8" Vent 28) Base Has 9/16" Vent 29) Base Has Optional 1/2" Vent 30) Black Powder Coated Top Plate 31) Carbon Fiber Top Plate 32) Filter Has Molded-in Velocity Stack 33) Filter Is Reverse Tapered 34) Fits "Legend/Dwarf" Race Cars w/FJ1200 Motors 35) Galvanized Top Plate 36) Metal Top Plate Has 1/4-20 Stud 37) Metal Top-Plate Has 6MM Stud 38) Offset Is Horizontal 39) Offset Is Vertical 40) Offset Is Vertical And To The Left 41) Offset Is Vertical And To The Right 42) Top Has 1/2" Vent 43) Top Has 1-1/16" Center Hole 44) Top Has 21/32" Center Hole 45) Top Has 23/32" Center Hole 46) Top Has 5/32" Center Hole 47) Top Has 7/16" Vent 48) Top Has Two 0.400" Vents 49) 2-1/4" Adapter Included 50) Tapered Insert Included 5" to 4-3/8"

Oval Tapered

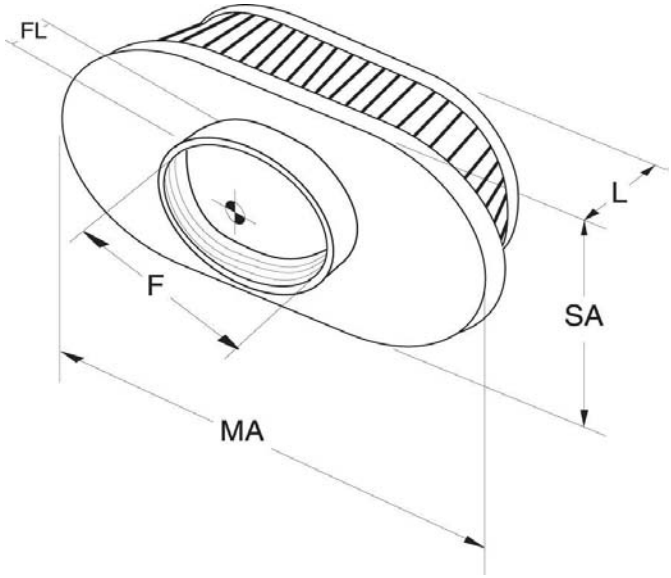

When selecting one of K&N's universal oval air filters, you should consider the following dimensions as they relate to the specification chart:

(F) Mounting Flange Inside Diameter - This is the most critical dimension and should be very close to the diameter of the application's inlet flange. The flange will stretch up to 1/16" for those in-between sizes.

(MA / SA) Filter Oval Dimensions - This is the length and width of the filter. Always use the largest filter practical to fit the application.

(L) Filter Length - This dimension is the length of the filter body only, it does not include the flange length. Always use the longest filter practical for maximum filtration.

(FA / FL) Flange Angle and/or Length - If no angle is listed in the specifications table, then the flange is straight. Any angle listed is in degrees and can be utilized when space is a problem.

(FO) Flange Offset - In some cases the center of the flange is offset from the center of the filter base in order to provide a better fit.

(F) Mounting Flange Inside Diameter		(MA/SA) Filter Base Dimensions		(MA/SA) Filter Top Dimensions		(L) Filter Length		(FL) Flange Length		(FA) Flange Style	(FO) Flange Offset		Rubber End Cap Part #	Chrome End Cap Part #	Custom End Cap Part #	Filter Wraps Part #
Inch	mm	Inch	mm	Inch	mm	Inch	mm	Inch	mm	Type Angle	Inch	mm				
1-3/4	44	2-7/8x4	73x102	2x3	51x76	2-3/4	70	5/8	16	Offset	1/2	13		RC-2450[7]		RC-1820DK
		3x4	76x102	2-1/2x3-1/2	64x89	2-3/4	70	5/8	16	Offset	1/2	13	RU-2450[7]			RU-0981DK
2	51	3x4	76x102	2x3	51x76	2-3/4	70	5/8	16	Offset	1/2	13		RC-1820[7]		RC-1820DK
		3x4	76x102	2x3	51x76	5	127	5/8	16	Offset	1/2	13		RC-2770[7]		
		3x4	76x102	2-1/2x3-1/2	64x89	2-3/4	70	5/8	16	Offset	1/2	13	RU-1820[7]			RU-0981DK
2-1/8	54	2-7/8x4	73x102	2-1/2x3-1/2	64x89	4	102	5/8	16	Offset	7/16	11	RU-2980[7]			
		3x4	76x102	2x3	51x76	2-3/4	70	5/8	16	Offset	7/16	11		RC-0981[7]		RC-1820DK
		3x4	76x102	2x3	51x76	4	102	5/8	16	Offset	7/16	11		RC-2900[8]		RC-2890DK
		3x4	76x102	2-1/2x3-1/2	64x89	2-3/4	70	5/8	16	Offset	7/16	11	RU-3010[9]			RU-0981DK
		3x4	76x102	2-1/2x3-1/2	64x89	4	102	5/8	16	Offset	7/16	11	RU-2810[7]			
		3x4	76x102	2-1/2x3-1/2	64x89	5	127	5/8	16	Offset	7/16	11	RU-2750[7]			
2-3/8	60	4-1/2x5-3/16	114x132	3-5/16x3-1/2	84x89	4-13/32	112	3/4	19	Offset	5/8	16		RC-70032[4]		
2-7/16	62	3-3/4x4-1/2	95x114	2x3	51x76	6	152	5/8	16	Centered				RC-3680		22-8051PK
		3-3/4x4-1/2	95x114	2-1/2x3-1/2	64x89	2-3/4	70	5/8	16	Centered			RU-2780[7]			RU-2780DK
		3-3/4x4-1/2	95x114	2-1/2x3-1/2	64x89	3-1/2	89	5/8	16	Centered			RU-3780			
		3-3/4x4-1/2	95x114	2-1/2x3-1/2	64x89	5	127	1-1/4	32	Angled 20°			SN-2540			SN-2540PK
		3-3/4x4-1/2	95x114	2-1/2x3-1/2	64x89	6	152	1-1/4	32	Angled 20°			SN-2550			SN-2550PK
		3-3/4x4-1/2	95x114	2-1/2x3-1/2	64x89	6	152	5/8	16	Centered					RE-0960	
		3-3/4x4-1/2	95x114	2-1/2x3-1/2	64x89	7	178	1-1/4	32	Angled 20°			SN-2560			SN-2560DK
2-15/32	63	4-1/8x4-17/32	105x115	3-5/16x4-7/16	84x113	5-1/2	140	2-9/32	58	Angled 9°				RC-70050		
2-9/16	65	3-1/2x4-15/16	89x125	2x3	51x76	5-1/2	140	29/32	23	Centered				RC-70040		
2-3/4	70	3-3/4x4-3/4	95x121	4x4	102x102	5-9/16	141	13/16	21	Centered					RX-5090[1]	
3	76	6x8	152x203	5x5	127x127	6-1/2	165	1-7/8	48	Centered					RX-4750[1]	RF-1042DK
3-1/2	89	5-1/4x8-1/2	133x216	4x6-1/4	102x159	5-1/2	140	3/4	19	Centered				RC-5040		RC-5040DK
		5-3/4x5-3/4	146x146	3-1/4x4-1/2	83x114	6	152	1-3/4	44	Angled 10°				RC-4400		

1) 1/4-20 Jack Nut Inserted Into Filter Top 2) Base Has (2) 7/8" Vents 3) Base Has 1/2" Vent 4) Base Has 1/32" Vent 5) Base Has 1/4" Vent 6) Base Has 11/16" Vent 7) Base Has 1-1/8" Vent 8) Base Has 13/16" Vent 9) Base Has 13/32" Vent 10) Base Has 13/64" Vent 11) Base Has 15/32" Vent 12) Base Has 15/64" Vent 13) Base Has 19/32" Vent 14) Base Has 21/32" Vent 15) Base Has 25/64" Vent 16) Base Has 29/32" Vent 17) Base Has 3/16" Vent 18) Base Has 3/4" Vent 19) Base Has 3/8" Vent 20) Base Has 31/64" Vent 21) Base Has 35/64" Vent 22) Base Has 45/64" Vent 23) Base Has 5/16" Vent 24) Base Has 5/8" Vent 25) Base Has 55/64" Vent 26) Base Has 7/16" Vent 27) Base Has 7/8" Vent 28) Base Has 9/16" Vent 29) Base Has Optional 1/2" Vent 30) Black Powder Coated Top Plate 31) Carbon Fiber Top Plate 32) Filter Has Molded-in Velocity Stack 33) Filter Is Reverse Tapered 34) Fits "Legend/Dwarf" Race Cars w/FJ1200 Motors 35) Galvanized Top Plate 36) Metal Top Plate Has 1/4-20 Stud 37) Metal Top-Plate Has 6MM Stud 38) Offset Is Horizontal 39) Offset Is Vertical 40) Offset Is Vertical And To The Left 41) Offset Is Vertical And To The Right 42) Top Has 1/2" Vent 43) Top Has 1-1/16" Center Hole 44) Top Has 21/32" Center Hole 45) Top Has 23/32" Center Hole 46) Top Has 5/32" Center Hole 47) Top Has 7/16" Vent 48) Top Has Two 0.400" Vents 49) 2-1/4" Adapter Included 50) Tapered Insert Included 5" to 4-3/8"

(F) Mounting Flange Inside Diameter Inch	mm	(MA/SA) Filter Base Dimensions Inch	mm	(MA/SA) Filter Top Dimensions Inch	mm	(L) Filter Length Inch	mm	(FL) Flange Length Inch	mm	(FA) Flange Style Type Angle	(FO) Flange Offset Inch	mm	Rubber End Cap Part #	Chrome End Cap Part #	Custom End Cap Part #	Filter Wraps Part #
3-1/2	89	5-3/4x5-3/4	146x146	3-1/4x4-1/2	83x114	7	178	1-3/4	44	Angled 10°					RF-1033	
		6x6	152x152	3-3/4x4-1/2	95x114	5	127	1-3/4	44	Centered			RU-4190			
3-7/8	98	5-3/8x7-1/4	137x184	3-11/32x4-7/16	85x113	5	127	1-7/16	37	Centered					RC-1601	
		5-7/16x7	138x178	3-5/16x4-7/16	84x113	6-11/32	161	1-1/2	38	Centered				RC-70031		RC-70031DI
3-29/32	99	5-15/32x7-1/32	139x179	3-5/16x4-7/16	84x113	4-7/8	124	1-15/32	37	Centered				RC-1681 [26]		
		5-15/32x7-17/32	139x191	4-1/2x4-1/2	114x114	6-5/8	168	1-15/32	37	Centered				RC-70030 [4]		
		5-15/32x7-1/2	139x191	4-1/2x4-1/2	114x114	6-5/8	168	1-3/8	35	Centered				RC-5055		
		5-1/2x7-1/2	140x191	3-5/16x4-1/2	84x114	8-1/16	205	1-1/2	38	Centered				RC-70002 [48]		
4	102	5-3/8x7	137x178	3-5/16x4-7/16	84x113	5-5/16	135	1-3/8	35	Centered				RC-5129 [4]		
		5-3/8x7-1/2	137x191	3-5/16x4-7/16	84x113	6-11/32	161	1-3/8	35	Centered				RC-1680 [23,3]		
		5-3/8x7	137x178	3-5/16x4-7/16	84x113	6-13/32	163	1-3/8	35	Centered				RC-5056		
		5-3/8x7-1/2	137x191	3-5/16x4-1/2	84x114	8-1/16	205	1-3/8	35	Centered					RC-5126	
		5-3/8x7-1/2	137x191	3-5/16x4-7/16	84x113	8-1/16	205	1-3/8	35	Centered				RC-1677 [18,1]		
		5-1/2x7	140x178	3-5/16x4-17/32	84x115	6-13/32	163	1-3/8	35	Centered				RC-1605		
		5-3/4x9	146x229	4-1/2x7	114x178	4	102	1-1/2	38	Centered					RC-5148	
		5-3/4x9	146x229	4-1/2x7	114x178	7-1/2	191	1-1/2	38	Centered					RF-1040	RF-1034DK
		5-3/4x9	146x229	4-1/2x7	114x178	7-1/2	191	5/8	16	Centered					RF-1034	RF-1034DK
		6-3/4x9-1/2	171x241	5-1/2x9	140x229	8-15/16	227	1-7/8	48	Offset	1-1/2	38			RC-5102 [2,29]	RC-5102DK
4-3/8	111	5-3/8x7-1/2	137x191	3-5/16x4-7/16	84x113	6-1/2	165	1-3/8	35	Centered					RC-5152	
		5-1/2x7-1/2	140x191	3-5/16x4-1/2	84x114	6-1/2	165	1-1/2	38	Centered					RC-5132	
4-1/2	114	5-7/8x5-7/8	149x149	3-1/4x4-1/2	83x114	8	203	5/8	16	Centered					RF-1021	
		6-1/4x9-1/4	159x235	4-1/2x7	114x178	10	254	5/8	16	Centered					RF-1024	RF-1024DK
4-3/4	121	5-5/8x8	143x203	3-31/32x6-7/32	101x158	5-1/8	130	1	25	Centered					RC-5047	
6	152	6-1/4x8-1/4	159x210	4x6-1/4	102x159	5	127	1	25	Centered				RC-3160		
		6-1/4x8-1/4	159x210	4-1/2x7	114x178	3-1/4	83	1	25	Centered				RF-1002		
8-3/4	222	5x18-3/4	127x476	3x16-3/4	76x425	4-5/8	117	2	51	Centered					RP-5161	RP-5135DK

1) 1/4-20 Jack Nut Inserted Into Filter Top 2) Base Has (2) 7/8" Vents 3) Base Has 1/2" Vent 4) Base Has 1/32" Vent 5) Base Has 1/4" Vent 6) Base Has 11/16" Vent 7) Base Has 1-1/8" Vent 8) Base Has 13/16" Vent 9) Base Has 13/32" Vent 10) Base Has 13/64" Vent 11) Base Has 15/32" Vent 12) Base Has 15/64" Vent 13) Base Has 19/32" Vent 14) Base Has 21/32" Vent 15) Base Has 25/64" Vent 16) Base Has 29/32" Vent 17) Base Has 3/16" Vent 18) Base Has 3/4" Vent 19) Base Has 3/8" Vent 20) Base Has 31/64" Vent 21) Base Has 35/64" Vent 22) Base Has 45/64" Vent 23) Base Has 5/16" Vent 24) Base Has 5/8" Vent 25) Base Has 55/64" Vent 26) Base Has 7/16" Vent 27) Base Has 7/8" Vent 28) Base Has 9/16" Vent 29) Base Has Optional 1/2" Vent 30) Black Powder Coated Top Plate 31) Carbon Fiber Top Plate 32) Filter Has Molded-in Velocity Stack 33) Filter Is Reverse Tapered 34) Fits "Legend/Dwarf" Race Cars w/FJ1200 Motors 35) Galvanized Top Plate 36) Metal Top Plate Has 1/4-20 Stud 37) Metal Top-Plate Has 6MM Stud 38) Offset Is Horizontal 39) Offset Is Vertical 40) Offset Is Vertical And To The Left 41) Offset Is Vertical And To The Right 42) Top Has 1/2" Vent 43) Top Has 1-1/16" Center Hole 44) Top Has 21/32" Center Hole 45) Top Has 23/32" Center Hole 46) Top Has 5/32" Center Hole 47) Top Has 7/16" Vent 48) Top Has Two 0.400" Vents 49) 2-1/4" Adapter Included 50) Tapered Insert Included 5" to 4-3/8"

Dual Flange Oval

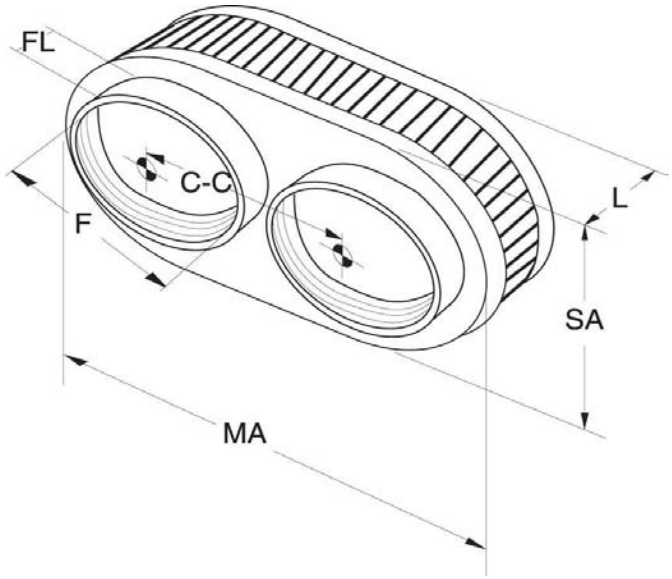

When selecting one of K&N's universal dual flange air filters, you should consider the following dimensions as they relate to the specification chart:

(F) Mounting Flange Inside Diameter - This is the most critical dimension and should be very close to the diameter of the application's inlet flange. The flange will stretch up to 1/16" for those in-between sizes.

(MA / SA) Filter Oval Dimensions - This is the length and width of the filter. Always use the largest filter practical to fit the application.

(L) Filter Length - This dimension is the length of the filter body only, it does not include the flange length. Always use the longest filter practical for maximum filtration.

(FA / FL) Flange Angle and/or Length - If no angle is listed in the specifications table, then the flange is straight. Any angle listed is in degrees and can be utilized when space is a problem.

(FO) Flange Offset - In some cases the center of the flange is offset from the center of the filter base in order to provide a better fit.

(C-C) Flange Center to Center - For dual flange filters, this is the flange spacing. This dimension should be within 2mm for proper fit on the application.

(F) Mounting Flange Inside Diameter		(MA/SA) Filter Base Dimensions		(MA/SA) Filter Top Dimensions		(L) Filter Length		(FL) Flange Length		(FA) Flange Style		(FO) Flange Offset		(C-C) Flange Ctr to Ctr		Rubber End Cap Part #	Chrome End Cap Part #	Filter Wraps Part #
Inch	mm	Inch	mm	Inch	mm	Inch	mm	Inch	mm	Type	Angle	Inch	mm	Inch	mm			
1-9/16	40	4-1/2x7	114x178	4-1/2x7	114x178	2	51	5/8	16	Offset		1-1/8	29	3	76		RC-2240	
1-7/8	48	3-7/8x6-1/8	98x156	3-7/8x6-1/8	98x156	3	76	5/8	16	Offset		3/8	10	2-5/8	67	R-0990[10]		
2	51	4x6-1/4	102x159	4x6-1/4	102x159	2	51	5/8	16	Offset		1/4	6	2-5/8	67		RC-2370[7]	
		4x6-1/4	102x159	4x6-1/4	102x159	3-1/4	83	5/8	16	Offset		1/4	6	2-5/8	67		RC-4350[7]	
2-1/16	52	3-3/4x8-1/2	95x216	3-3/4x8-1/2	95x216	1-3/4	44	5/8	16	Centered				5	127		RC-3240	
		3-3/4x8-1/2	95x216	3-3/4x8-1/2	95x216	2-3/8	60	5/8	16	Centered				3-3/4	95		RC-2820	
		3-3/4x8-1/2	95x216	3-3/4x8-1/2	95x216	2-3/8	60	5/8	16	Centered				5	127		RC-2720	
		3-3/4x6-1/4	95x159	3-3/4x6-1/4	95x159	3	76	5/8	16	Centered				3-1/16	78	R-2300		
2-1/8	54	4x6	102x152	3-3/4x4-1/2	95x114	4	102	5/8	16	Centered				2-15/16	75	RU-2850		
		4x6-1/4	102x159	4x6-1/4	102x159	1-3/4	44	5/8	16	Centered				2-15/16	75		RC-2380	
		4x6-1/4	102x159	4x6-1/4	102x159	2	51	3/4	19	Centered				2-5/8	67		RC-2360	
		4x6-1/4	102x159	4x6-1/4	102x159	3	76	3/8	10	Centered				3-1/8	79		RC-3510[32]	
2-3/8	60	3-5/8x7-3/8	92x187	3-5/8x7-3/8	92x187	3	76	5/8	16	Centered				4-3/16	106	RU-2970		
		3-3/4x6-1/4	95x159	3-7/16x4-7/16	87x113	6-3/4	171	3/8	10	Centered				3	76	RU-4710		RU-4710PK
		3-3/4x6-1/4	95x159	3-3/4x6-1/4	95x159	3	76	3/8	10	Centered				3	76	RU-2920		
		3-3/4x6-1/4	95x159	4-7/16x3-7/16	113x87	5	127	3/8	10	Centered				3	76	RU-4720		RU-4720PK
2-3/4	70	5-1/2x9	140x229	5-1/2x9	140x229	2	51	3/4	19	Centered				4-1/16	103		RC-2830	22-2840PL
		5-1/2x9	140x229	5-1/2x9	140x229	2-1/2	64	3/4	19	Centered				4-1/16	103		RC-2840	22-2840PL

1) 1/4-20 Jack Nut Inserted Into Filter Top 2) Base Has (2) 7/8" Vents 3) Base Has 1/2" Vent 4) Base Has 1/32" Vent 5) Base Has 1/4" Vent 6) Base Has 11/16" Vent 7) Base Has 1-1/8" Vent 8) Base Has 13/16" Vent 9) Base Has 13/32" Vent 10) Base Has 13/64" Vent 11) Base Has 15/32" Vent 12) Base Has 15/64" Vent 13) Base Has 19/32" Vent 14) Base Has 21/32" Vent 15) Base Has 25/64" Vent 16) Base Has 29/32" Vent 17) Base Has 3/16" Vent 18) Base Has 3/4" Vent 19) Base Has 3/8" Vent 20) Base Has 31/64" Vent 21) Base Has 35/64" Vent 22) Base Has 45/64" Vent 23) Base Has 5/16" Vent 24) Base Has 5/8" Vent 25) Base Has 55/64" Vent 26) Base Has 7/16" Vent 27) Base Has 7/8" Vent 28) Base Has 9/16" Vent 29) Base Has Optional 1/2" Vent 30) Black Powder Coated Top Plate 31) Carbon Fiber Top Plate 32) Filter Has Molded-in Velocity Stack 33) Filter Is Reverse Tapered 34) Fits "Legend/Dwarf" Race Cars w/FJ1200 Motors 35) Galvanized Top Plate 36) Metal Top Plate Has 1/4-20 Stud 37) Metal Top-Plate Has 6MM Stud 38) Offset Is Horizontal 39) Offset Is Vertical 40) Offset Is Vertical And To The Left 41) Offset Is Vertical And To The Right 42) Top Has 1/2" Vent 43) Top Has 1-1/16" Center Hole 44) Top Has 21/32" Center Hole 45) Top Has 23/32" Center Hole 46) Top Has 5/32" Center Hole 47) Top Has 7/16" Vent 48) Top Has Two 0.400" Vents 49) 2-1/4" Adapter Included 50) Tapered Insert Included 5" to 4-3/8"

RC-5000

RC-5010

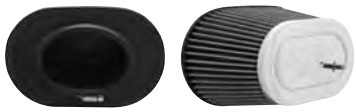
RC-5050

SPECIAL FILTERS TO CLAMP DIRECTLY ON GM TPI THROTTLE BODIES USING 1990-92 STOCK GM OR DIGITAL FUEL INJECTION COMPUTER. WILL NOT WORK ON ENGINES THAT USE A MASS-AIR SENSOR. NOTE: NOT LEGAL FOR USE ON EMISSION CONTROLLED VEHICLES THAT OPERATE ON PUBLIC STREETS.

2 15/16″ x 4 3/4″ oval mounting flange	4 3/4″ x 6 1/2″ oval base	3 1/4″ x 4 1/2″ stainless steel oval top	5 5/8″ filter height, 7/8″ flange length	**RC-5000**
2 15/16″ x 4 3/4″ oval mounting flange	4 3/4″ x 6 1/2″ oval base	3 1/4″ x 4 1/2″ rubber oval top	3 1/2″ filter height, 7/8″ flange length	**RU-5004**
2 15/16″ x 4 3/4″ oval mounting flange	4 3/4″ x 6 1/2″ oval base	3 1/4″ x 4 1/2″ stainless steel oval top	3 1/2″ filter height, 7/8″ flange length	**RC-5004**
2 15/16″ x 4 3/4″ oval mounting flange	4 1/2″ x 7″ oval base	4 1/2″ x 7″ chrome oval top	2″ filter height, 3/4″ flange length	**RC-5010**
2 15/16″ x 4 3/4″ oval mounting flange	5 1/4″ x 8 5/8″ oval base	4″ x 6 1/4″ stainless steel oval top	5 1/2″ filter height, 7/8″ flange length	**RC-5050**
3 15/16″ x 6 1/4″ oval mounting flange	5 1/2″ x 7 3/4″ oval base	4″ x 6 1/4″ stainless steel oval top	5″ filter height, 7/8″ flange length	**RF-1001**

RE-0220

RE-0280

RE-0380

SPECIAL FILTERS WITH THREADS IN THE TOP-PLATE TO AID IN MOUNTING, OR TO AFFIX COVERS/SHIELDS.

1 1/4″ round mounting flange, 3 1/2″ filter diameter, rubber top, 1/4-20 threads, 3 1/2″ filter height, 5/8″ flange length	**RE-0220**
1 3/4″ round mounting flange, 3 1/2″ filter diameter, rubber top, 1/4-20 threads, 3 1/2″ filter height, 5/8″ flange length	**RE-0260**
2″ round mounting flange, 3″ base diameter, 3 1/2″ rubber top, 1/4-20 threads, 3 1/2″ filter height, 5/8″ flange length	**RE-0280**
2 1/2″ round mounting flange, 5″ base diameter, 5 1/2″ metal top, 1/4-20 threads, 2 3/4″ filter height, 5/8″ flange length	**RE-0380**

RU-2952

SPECIAL FILTERS WITH DUAL OVAL MOUNTING FLANGES, SOLD IN TWO-PACKS ONLY.

2 3/16″ x 2 7/8″ flanges, 5″ x 6″ rectangle base, 3 1/4″ x 4 1/4″ rubber oval top, 4″ filter height, 11/16″ flange length, 3 1/8 c-c spacing	**RU-2952**

RM-3001

RM-3501

SPECIAL FILTERS WITH METAL BASE AND FLANGES, TO ALLOW MOUNTING THE FILTER WITH A HOSE, IDEAL FOR HIGH TEMPERATURE APPLICATIONS SUCH AS TURBOCHARGERS.

3″ Outside diameter round mounting flange, 7″ filter diameter, 7″ chrome top w/1″ hole, 6″ filter height, 1 5/8″ flange length	**RM-3001**
3 1/2″ Outside diameter round mounting flange, 4 1/2″ x 7″ oval base, 4 1/2″ x 7″ stainless steel top, 3 1/2″ filter height, 5/8″ flange length	**RM-3501**

RU-3460

RF-1011

RU-3450

OTHER

1 1/2″ x 2 1/4″ oval mounting offset flange, 3 3/4″ x 3 7/16″ rect. base, 3 3/8″ x 2 3/4″ rectangle top, 2 1/4″ filter height, 3/4″ flange length	**RU-3450**
1 15/16″ Outside diameter round mounting offset flange, 3 7/8″ x 3 7/16″ rectangle base, 3 3/8″ x 2 3/4″ rectangle top, 2 1/4″ filter height, 1/2″ flange length	**RU-3460**
1 1/4″ Inside diameter round centered flange, 3 7/8″ x 3 7/16″ rectangle base, tapered, 2 1/4″ filter height, 1/2″ flange length	**RU-3410**
3 3/16″ Outside diameter flange, 4 1/2″ x 6 1/4″ base, chrome top, 11 3/8″ filter height, 3/4″ flange length	**RF-1011**

FILTER DIMENSIONS BY SIZE

Style A

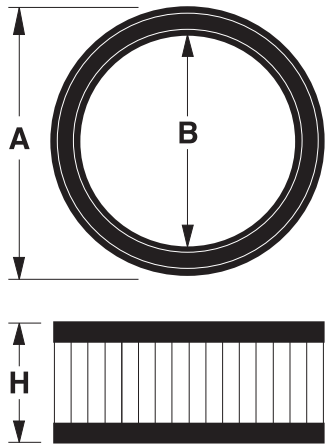

Style B

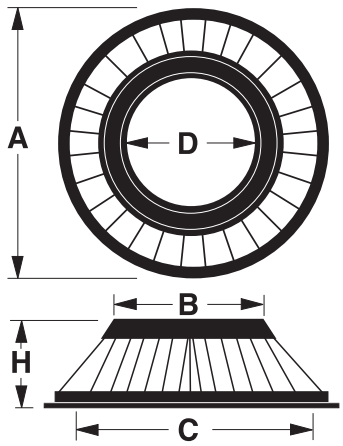

Style C

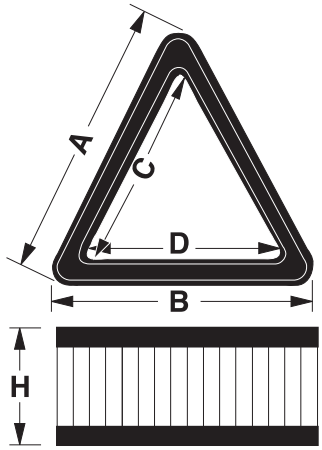

Style D

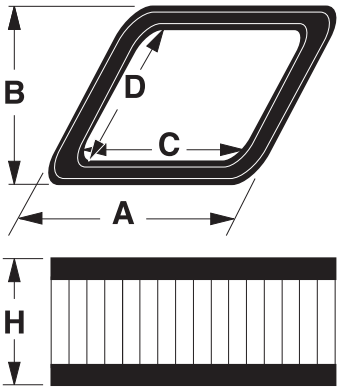

Style E

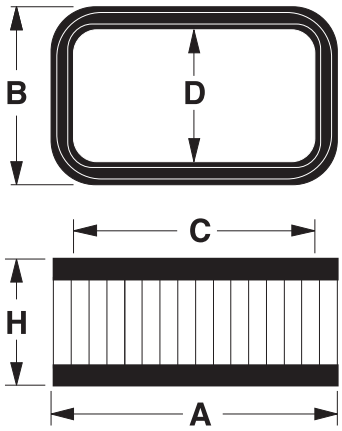

Style F

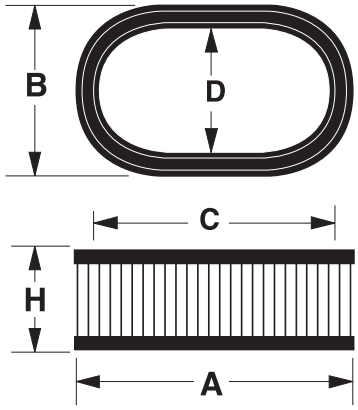

Style G

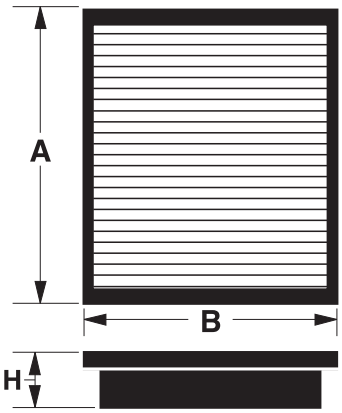

Style H

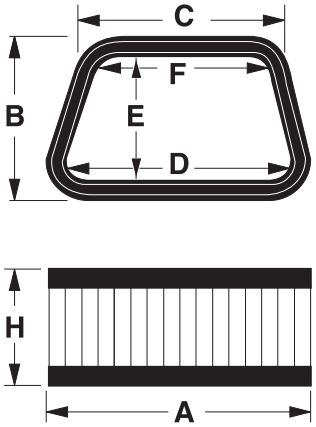

Style I

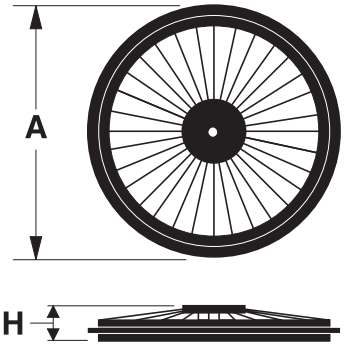

Round Filters

Part #	Style	A	B	C	D	E	F	H
E-3003	A	1.250	0.250					1.063
E-3009	A	2.000	1.063					1.063
E-4110	A	2.750	1.375					2.625
E-4142	A	2.750	1.250					2.813
E-9234 [3]	A	2.813	1.250					2.688
38-9175 [3]	A	2.835	2.835					7.756
E-2010	A	3.000	1.750					2.500
E-4188 [3]	A	3.000	2.000					1.438
E-4189 [3]	A	3.000	2.000					1.813
E-4210	A	3.000	2.125					3.125
HD-2492	A	3.000	2.000					5.000
MG-0200	A	3.000	2.188					7.750
E-4284	A	3.250	2.250					2.000
E-4510	A	3.250	1.625					7.063
YA-2597 [3]	A	3.313	1.875					5.500
38-9027 [3]	A	3.346	3.346					13.268
E-4495 [3]	A	3.375	1.938					7.250
CG-0100	A	3.500	2.500					4.563
DU-1006	A	3.500	2.000					5.500
DU-6908	A	3.500	2.000					5.500
E-2040	A	3.500	2.438					6.625
E-3050	A	3.500	2.438					3.500
E-4552 [3]	A	3.500	1.875					7.125
E-9257	A	3.500	2.000					5.500
HA-0510 [3]	A	3.500	2.062					5.000
HA-4020 [3]	A	3.500	2.250					5.188
KA-1200	A	3.500	2.500					5.375
KA-6201 [3]	A	3.500	1.813					7.188
KA-7583	A	3.500	2.438					4.813
YA-0587 [3]	A	3.500	2.375					3.250
KA-0018 [1]	A	3.543	2.165					6.457
BM-0100	A	3.563	2.438					2.813
E-4527 [3]	A	3.563	2.375					4.250
HA-3010	A	3.563	2.125					5.313
E-2401	A	3.625	2.375					7.875
E-4513 [3]	A	3.625	1.625					2.875
HA-2501 [3]	A	3.625	1.438					4.125
KA-0750	A	3.625	2.375					7.438
KA-7500	A	3.625	2.375					6.813
KA-7580	A	3.625	2.375					4.625
YA-4350 [3]	A	3.625	2.625					9.000
YA-1308 [3]	A	3.688	2.094					5.875
HA-5094 [3]	A	3.750	2.500					5.313
SU-7503	A	3.750	2.750					4.500
E-9025	A	3.781	2.844					2.781
E-3120	A	3.875	2.875					2.000
E-3130	A	3.875	2.875					3.250
E-9260	A	3.875	2.125					11.875
HA-1326	A	3.875	2.500					4.125
HA-2090 [3]	A	3.875	1.688					4.313
HA-2597 [3]	A	3.875	1.500					4.000
HA-3098 [3]	A	3.875	1.875					4.250
HA-5100 [3]	A	3.875	2.375					4.438
E-9245	A	3.937	2.559					5.945
YA-4001 [3]	A	3.938	1.938					5.875
E-4310	A	4.000	2.375					2.750
E-4550 [2]	A	4.000	2.750					3.188
HA-2410 [3]	A	4.000	2.875					5.250
HA-4435 [3]	A	4.000	2.625					6.000
HA-9002 [3]	A	4.000	2.750					5.375
KA-1199	A	4.000	3.938					4.688
KA-1203 [3]	A	4.000	3.000					2.000
PL-1003 [3]	A	4.000	2.500					7.000
PL-1004 [3]	A	4.000	2.500					4.250

Round Filters

Part #	Style	A	B	C	D	E	F	H
YA-2598 [3]	A	4.000	1.875					3.750
YA-4085	A	4.000	2.063					4.125
YA-7086	A	4.000	2.063					5.875
DU-0202	A	4.125	2.875					2.438
E-4961 [3]	A	4.125	2.625					10.750
HA-0301 [1]	A	4.125	1.750					3.625
E-4450	A	4.188	2.875					4.875
HA-6089 [3]	A	4.188	2.875					3.875
KA-6085 [3]	A	4.188	2.875					1.625
PL-5008 [3]	A	4.188	2.500					10.750
SU-8087 [3]	A	4.188	2.125					3.000
AL-6502	A	4.250	3.000					3.125
E-2876	A	4.250	2.875					9.313
E-4370	A	4.250	2.000					3.875
HA-0300	A	4.250	3.125					2.125
HA-0850 [3]	A	4.250	3.000					5.313
KA-4010	A	4.250	3.000					4.375
SU-1284 [3]	A	4.250	2.938					5.094
YA-6608 [3]	A	4.250	2.813					4.000
BD-6502 [3]	A	4.313	2.750					5.000
E-2864	A	4.313	2.563					9.938
E-9242	A	4.313	2.438					5.938
KA-3603 [3]	A	4.313	2.938					5.313
BM-0400	A	4.375	3.000					3.375
BM-1298	A	4.375	3.000					3.188
E-2190	A	4.375	2.875					5.750
E-2862	A	4.375	2.625					10.500
E-4400	A	4.375	3.000					2.313
E-4420	A	4.375	3.000					3.313
E-4430	A	4.375	3.000					5.000
E-9238	A	4.375	3.000					7.000
YA-6092	A	4.375	2.563					4.688
E-2230	A	4.438	3.000					3.688
E-4490	A	4.438	3.000					7.000
E-4517 [1]	A	4.438	2.500					3.625
E-9000	A	4.438	2.875					9.500
E-9104	A	4.438	2.625					6.750
E-9256	A	4.438	2.625					8.625
KA-1408	A	4.438	3.188					3.563
E-0770	A	4.500	3.063					5.625
E-2240	A	4.500	3.313					4.813
E-2244	A	4.500	3.250					8.625
E-2658	A	4.500	2.688					9.875
E-9060	A	4.500	2.750					11.313
HA-1000 [3]	A	4.500	2.250					2.250
HA-4400 [3]	A	4.500	3.125					4.500
HA-5083 [3]	A	4.500	2.750					3.750
KA-2288 [3]	A	4.500	2.000					3.563
KA-4093 [3]	A	4.500	2.813					3.625
PL-1001	A	4.500	3.250					4.375
YA-6089	A	4.500	2.500					4.125
YA-7585	A	4.500	2.500					4.875
E-9123	A	4.528	2.756					16.024
E-9131	A	4.625	3.375					9.563
HA-5000 [3]	A	4.750	3.125					4.625
TB-0100	A	4.750	3.250					1.625
BM-0200	A	4.813	3.125					4.500
E-9001	A	4.813	2.125					1.750
E-1007 [3]	A	4.875	3.313					6.063
HA-0001	A	4.875	3.625					3.188
38-9103 [1,3]	A	4.921	2.559					11.220
38-9150 [3]	A	4.921	2.756					6.890
E-0771	A	4.938	3.125					6.813
E-2429	A	4.938	3.188					6.750

1) Inner Support Wire 2) Outer Support Wire 3) Closed Top

Filter Dimensions by Size

Round Filters

Part #	Style	A	B	C	D	E	F	H
E-9099	A	4.938	3.500					12.125
AL-1001 [3]	A	5.000	3.750					4.312
E-0850	A	5.000	3.750					4.938
E-0870	A	5.000	3.750					5.250
E-2231 [3]	A	5.000	3.625					9.000
E-2290 [3]	A	5.000	2.750					3.875
E-2291 [3]	A	5.000	2.750					3.875
E-2300 [1]	A	5.000	3.625					7.500
E-3140	A	5.000	3.750					3.563
E-4962 [3]	A	5.000	3.375					12.375
E-9183	A	5.000	3.594					6.344
HA-2420 [3]	A	5.000	3.000					3.500
HA-3084 [3]	A	5.000	3.500					3.813
HA-4350	A	5.000	3.000					5.000
KA-1780	A	5.000	3.500					2.188
KA-4508 [3]	A	5.000	3.438					7.375
SU-4250	A	5.000	3.625					3.563
AL-1098 [3]	A	5.063	3.875					4.750
E-2310	A	5.063	3.250					6.688
E-2400	A	5.063	3.625					3.688
E-2984 [2]	A	5.063	2.563					11.375
E-2021 [3]	A	5.125	3.156					4.500
E-2402 [1]	A	5.125	3.625					12.188
E-2590 [1,3]	A	5.125	3.000					11.313
E-9002	A	5.125	3.750					4.938
E-9053	A	5.125	3.750					9.938
E-9139	A	5.125	3.750					7.063
E-9235	A	5.125	3.750					10.375
38-9154 [1,3]	A	5.219	2.969					7.031
38-9051 [1,3]	A	5.236	2.834					8.425
38-9102	A	5.236	2.835					11.063
E-0777 [3]	A	5.250	3.313					7.125
E-1008 [1]	A	5.250	3.375					13.125
E-2012 [3]	A	5.250	3.625					10.000
E-4800 [1,3]	A	5.250	2.563					11.000
E-4810	A	5.250	2.625					11.313
HD-0300	A	5.250	4.000					2.000
RO-5010	A	5.250	3.969					3.125
E-1986	A	5.313	3.313					13.250
E-2345	A	5.313	3.500					6.375
E-2350	A	5.313	3.500					6.500
E-2380	A	5.313	3.500					8.750
E-3506	A	5.313	4.063					2.375
E-9244 [3]	A	5.344	3.500					9.813
E-0900	A	5.375	3.750					3.188
E-2320	A	5.375	3.500					2.375
E-2321	A	5.375	3.500					2.250
E-2330	A	5.375	3.500					2.563
E-2340	A	5.375	3.500					4.250
E-2351	A	5.375	3.500					6.500
E-2360	A	5.375	3.500					6.313
E-2381	A	5.375	3.500					8.625
E-2450	A	5.375	3.625					5.875
E-2457	A	5.375	3.625					9.125
E-3200	A	5.375	4.000					2.000
E-3205	A	5.375	4.000					2.250
E-9108	A	5.375	3.500					4.875
E-9130	A	5.375	3.500					4.938
E-9134	A	5.375	3.500					7.000
E-9251	A	5.375	3.500					9.000
SU-7586 [3]	A	5.375	1.875					7.000
E-1992	A	5.438	3.438					6.063
DU-0100	A	5.500	3.625					3.875
E-2210 [3]	A	5.500	2.750					6.500

Round Filters

Part #	Style	A	B	C	D	E	F	H
E-2455	A	5.500	3.750					5.438
E-9268 [3]	A	5.500	3.750					9.875
KA-1100	A	5.500	4.375					3.000
E-0890	A	5.625	3.625					5.938
E-0930	A	5.625	3.625					3.938
E-2220	A	5.625	3.000					4.938
E-2222	A	5.625	3.000					4.000
E-2447	A	5.625	3.875					7.250
E-2997 [3]	A	5.625	3.000					5.063
E-3220	A	5.625	4.500					2.000
E-3221	A	5.625	4.625					2.000
E-3223	A	5.625	4.625					2.000
E-3230	A	5.625	4.500					4.375
KA-1596 [3]	A	5.625	4.500					2.000
YA-0086	A	5.625	4.500					4.188
YA-8502 [3]	A	5.625	3.875					3.000
E-9228	A	5.709	4.094					9.250
38-9203	A	5.748	3.425					10.906
E-0775	A	5.750	4.000					7.250
E-2020	A	5.750	0					9.063
E-2416 [1,3]	A	5.750	4.000					10.000
E-2995 [3]	A	5.750	3.750					10.188
E-9240	A	5.750	4.000					8.500
E-2986 [3]	A	5.813	3.438					8.125
E-2991 [3]	A	5.813	3.438					8.625
E-9282 [3]	A	5.827	3.071					6.614
E-2410	A	5.875	4.375					3.000
E-2415	A	5.875	3.250					6.125
E-2417	A	5.875	3.250					7.625
E-3180	A	5.875	4.500					1.750
E-3190	A	5.875	4.500					3.250
E-3210	A	5.875	4.500					3.500
E-3211	A	5.875	4.875					1.750
E-3212	A	5.875	4.875					1.813
E-3213	A	5.875	4.875					2.063
E-3214	A	5.875	4.875					6.125
E-3218	A	5.875	4.875					3.250
E-3956 [3]	A	5.875	3.250					6.000
E-4530	A	5.875	3.250					3.375
E-9029	A	5.875	4.500					5.875
E-9143	A	5.875	4.875					2.125
E-9144	A	5.875	4.875					2.500
E-9145	A	5.875	4.875					3.250
HA-1185	A	5.875	4.500					2.875
E-1990 [3]	A	5.938	3.125					9.938
E-9140	A	5.969	4.000					3.844
38-9207 [1,3]	A	6.000	3.425					7.480
E-1983	A	6.000	3.625					7.375
E-2420	A	6.000	4.250					3.875
E-2430	A	6.000	4.250					3.250
E-3002	A	6.000	4.250					5.750
E-3224	A	6.000	4.625					2.063
E-3225	A	6.000	4.625					2.188
E-3226	A	6.000	4.625					2.500
E-3971	A	6.000	4.625					2.750
HD-0500	A	6.000	4.750					2.250
HU-0600 [1]	A	6.000	4.000					2.125
E-9231-1	A	6.024	3.375					11.313
E-9283	A	6.031	3.469					11.969
38-9017 [1,3]	A	6.063	3.425					11.969
E-1796 [1,3]	A	6.063	3.750					9.500
E-2470	A	6.063	4.688					1.875
E-2473	A	6.063	4.688					2.250
E-2860 [1,3]	A	6.063	3.500					12.875

1) Inner Support Wire 2) Outer Support Wire 3) Closed Top

Round Filters

Part #	Style	A	B	C	D	E	F	H
E-3350	A	6.063	4.688					2.250
E-4583	A	6.063	4.688					3.000
E-4964	A	6.063	4.688					1.875
E-9280 [3]	A	6.063	3.425					9.764
E-2370	A	6.125	4.250					2.188
E-3330	A	6.125	5.125					2.063
E-4710	A	6.188	4.438					7.563
E-2993 [3]	A	6.250	2.750					8.250
E-3290	A	6.250	5.250					1.500
E-3300	A	6.250	5.250					2.750
E-3310	A	6.250	5.250					3.000
E-3320	A	6.250	5.250					1.750
E-3322	A	6.250	5.250					2.500
E-3323	A	6.250	5.250					2.750
E-3340	A	6.250	5.250					3.250
E-3344	A	6.250	5.250					4.000
E-3346	A	6.250	5.250					6.000
E-9267 [1]	A	6.250	3.625					5.688
E-9187	A	6.313	3.625					9.313
E-3237	A	6.375	5.000					1.500
E-3240	A	6.375	5.000					1.750
E-3243	A	6.375	5.000					2.063
E-3250	A	6.375	5.000					2.250
E-3260	A	6.375	5.000					2.500
E-3270	A	6.375	5.000					3.250
E-3280	A	6.375	5.000					3.625
E-3282	A	6.375	5.000					3.750
E-3284	A	6.375	5.000					4.000
E-9184	A	6.375	4.750					4.875
E-9216	A	6.496	4.724					4.449
E-2017 [1]	A	6.500	4.750					9.313
E-2475	A	6.500	4.000					4.000
E-4595 [1]	A	6.500	4.000					2.250
E-4600 [1]	A	6.500	4.000					6.375
E-4610 [1]	A	6.500	4.000					7.688
E-9011 [1]	A	6.500	4.000					9.125
E-9033 [1]	A	6.500	4.000					6.938
E-2023	A	6.575	3.248					5.709
E-2485	A	6.750	4.250					3.563
E-2487	A	6.750	4.250					5.500
E-2488	A	6.750	4.250					2.750
E-4640	A	6.750	5.000					2.250
E-4650	A	6.750	5.000					6.625
E-2443	A	6.813	4.313					5.813
E-2440	A	6.875	4.375					5.625
E-9252	A	6.890	4.882					4.843
E-2022 [3]	A	6.906	6.811					5.331
E-0990	A	7.000	5.188					4.625
E-2490	A	7.000	5.188					2.375
E-2500	A	7.000	5.188					2.563
E-2510	A	7.000	5.188					2.750
E-2520	A	7.000	5.188					3.188
E-2530	A	7.000	5.188					5.063
E-2540	A	7.000	5.188					2.188
E-2550	A	7.000	5.188					3.125
E-3360	A	7.000	5.188					2.000
E-3380	A	7.000	5.188					3.000
E-3390	A	7.000	5.188					3.750
E-3400	A	7.000	5.188					4.000
E-3402	A	7.000	5.500					2.000
E-3403	A	7.000	5.500					3.000
E-4518	A	7.000	5.500					2.938
E-4521	A	7.000	5.500					2.500
E-4522	A	7.000	5.500					1.750

Round Filters

Part #	Style	A	B	C	D	E	F	H
E-4655	A	7.000	5.500					1.750
E-4660	A	7.000	5.500					2.000
E-4665	A	7.000	5.500					2.250
HD-0600 [3]	A	7.000	5.000					1.938
KA-8095	A	7.000	6.000					2.500
38-9221 [1,3]	A	7.008	3.622					5.000
E-2553	A	7.250	4.625					4.375
E-4680 [1]	A	7.250	4.750					8.500
E-4690	A	7.250	5.250					5.500
AC-1012 [3]	A	7.313	5.875					6.438
E-9270	A	7.362	4.646					5.905
E-2601	A	7.375	6.125					2.188
E-2444 [1,3]	A	7.500	4.125					5.500
E-2536	A	7.500	5.000					4.344
E-2560	A	7.500	5.500					4.250
E-2566	A	7.500	5.625					2.063
E-3336	A	7.500	6.125					2.250
E-9225	A	7.500	5.750					2.500
HU-1200 [1]	A	7.563	6.250					2.875
E-1000	A	7.750	6.375					3.000
E-3410	A	7.750	6.750					2.063
E-3440	A	7.750	6.250					1.750
E-3450	A	7.750	6.250					2.500
E-3460	A	7.750	6.375					3.250
E-3470	A	7.750	6.375					4.500
E-3480	A	7.750	6.375					5.500
E-3490	A	7.750	6.250					6.000
E-4425	A	7.750	6.375					2.188
E-9050	A	7.750	6.750					2.500
E-9052	A	7.750	6.750					3.250
E-9054	A	7.750	6.750					1.750
E-1015	A	8.000	6.750					2.438
E-1023 [1,3]	A	8.000	4.500					9.250
E-2015 [3]	A	8.000	4.500					4.625
E-2615 [1,3]	A	8.000	4.500					8.000
E-2875 [3]	A	8.000	5.000					6.000
E-4720	A	8.000	5.500					2.125
E-4730 [1]	A	8.000	6.000					8.000
E-9181	A	8.000	6.125					1.750
RF-1022 [3]	A	8.000	5.000					6.000
NO-0100	A	8.125	6.875					2.875
E-2570	A	8.188	6.250					1.875
E-2600	A	8.188	6.250					2.188
E-1025	A	8.250	6.875					2.500
E-1040	A	8.313	6.313					3.250
E-9173	A	8.344	6.625					2.313
E-3492	A	8.500	6.625					2.375
E-3972	A	8.813	6.188					1.625
E-1010	A	9.000	7.000					2.875
E-1050	A	9.000	7.000					2.000
E-1700 [1,3]	A	9.000	5.250					12.938
E-2585	A	9.000	7.000					1.813
E-2620	A	9.000	7.125					1.875
E-2630	A	9.000	7.125					2.000
E-2640	A	9.000	7.125					2.250
E-2660	A	9.000	7.125					2.500
E-2670	A	9.000	7.125					2.375
E-2710	A	9.000	7.500					2.000
E-2720	A	9.000	7.500					2.500
E-3500	A	9.000	7.000					3.000
E-3510	A	9.000	7.500					2.000
E-3527	A	9.000	8.000					2.000
E-3530	A	9.000	8.000					2.875
E-3532	A	9.000	8.000					3.750

1) Inner Support Wire 2) Outer Support Wire 3) Closed Top

Filter Dimensions by Size

Round Filters

Part #	Style	A	B	C	D	E	F	H
E-3534	A	9.000	8.000					3.313
E-3550 [1]	A	9.000	7.500					2.750
E-3551	A	9.000	8.000					3.500
E-3600	A	9.000	7.000					3.500
E-3640	A	9.000	7.500					4.000
E-3650 [1]	A	9.000	7.500					5.000
E-3657 [1]	A	9.000	7.500					7.000
E-3659 [1]	A	9.000	7.500					9.000
E-3660 [1]	A	9.000	7.500					10.000
E-4780	A	9.000	7.000					6.625
E-3620	A	9.125	7.875					2.000
E-3630	A	9.125	7.875					3.500
E-9092	A	9.125	7.375					1.938
E-9135	A	9.188	7.313					2.438
E-1100	A	9.250	7.500					2.750
E-1110	A	9.250	7.500					2.625
E-1112	A	9.250	7.500					2.375
E-2700	A	9.250	7.250					2.750
E-2723	A	9.250	6.750					3.125
E-2725	A	9.250	6.750					3.375
E-2750	A	9.250	7.500					1.938
E-2755	A	9.250	7.500					2.438
E-1115	A	9.313	7.500					2.500
E-1117	A	9.313	7.500					1.688
E-9101	A	9.528	7.677					1.772
E-9122	A	9.528	7.677					1.969
E-1065	A	9.625	8.375					2.813
E-3670	A	9.625	8.375					3.250
E-3674	A	9.625	8.375					6.000
E-9193 [3]	A	9.646	0.591					0.906
E-2610	A	9.750	7.875					2.250
E-2680	A	9.750	7.875					2.750
E-2730	A	9.750	7.875					1.688
E-2734	A	9.750	7.875					1.750
E-2740	A	9.750	7.875					2.000
E-2760	A	9.750	7.875					2.375
E-2810	A	9.750	8.000					2.563
E-2813	A	9.750	8.000					2.875
E-3675	A	9.875	8.875					2.500
E-1035	A	10.000	8.625					2.438
E-1068	A	10.000	8.375					2.000
E-1070	A	10.000	8.000					2.000
E-1080	A	10.000	8.000					2.250
E-1088	A	10.000	8.000					2.063
E-1090	A	10.000	8.000					2.313
E-1095	A	10.000	8.000					2.563
E-1120	A	10.000	8.000					3.000
E-1150	A	10.000	8.000					3.500
E-1170	A	10.000	8.000					6.000
E-2764	A	10.000	8.000					2.500
E-2861	A	10.000	8.375					3.000
E-3678	A	10.000	8.250					2.750
E-3679	A	10.000	8.000					3.750
E-4790	A	10.000	7.375					2.750
E-4820	A	10.000	7.375					5.500
E-9031	A	10.000	7.375					3.688
E-9080	A	10.000	8.000					2.750
E-2650	A	10.125	8.375					3.438
E-9103	A	10.236	8.268					2.087
E-1030	A	10.375	8.500					2.250
E-2770	A	10.500	8.500					1.750
E-2780	A	10.500	8.500					2.000
E-2790	A	10.500	8.500					2.188
E-2800	A	10.500	8.500					3.250

Round Filters

Part #	Style	A	B	C	D	E	F	H
E-9113	A	10.563	8.750					2.375
HA-1191	A	10.563	8.813					2.875
E-9176	A	10.625	8.750					2.125
E-1211	A	10.630	8.740					2.480
E-1180	A	11.000	9.250					1.750
E-1200	A	11.000	9.000					2.188
E-1210	A	11.000	9.250					2.313
E-1220	A	11.000	9.250					2.500
E-1230	A	11.000	9.250					3.000
E-1240	A	11.000	9.250					2.750
E-1250	A	11.000	9.250					3.500
E-1290	A	11.000	9.000					2.750
E-1300	A	11.000	9.000					2.625
E-1325	A	11.000	9.000					1.938
E-1460	A	11.000	8.375					4.938
E-1461	A	11.000	8.375					4.438
E-2830	A	11.000	9.250					2.375
E-2840	A	11.000	9.250					3.125
E-3680	A	11.000	9.250					5.000
E-3681 [1]	A	11.000	9.000					5.000
E-3690	A	11.000	9.250					6.000
E-3691 [1]	A	11.000	9.000					6.000
E-3692	A	11.000	9.250					4.000
E-3693 [1]	A	11.000	9.000					8.000
E-4830	A	11.000	8.500					3.375
E-1280	A	11.250	9.375					1.750
E-1350	A	11.250	9.500					2.125
E-1360	A	11.250	9.375					2.375
E-2690	A	11.250	8.750					1.563
E-2850	A	11.250	9.500					1.875
E-2870	A	11.250	8.875					4.250
E-9190	A	11.299	8.661					4.094
E-1320	A	11.375	8.875					5.563
E-1991	A	11.375	9.375					3.125
38-9119	A	11.417	2.638					11.417
E-2820	A	11.500	9.500					2.000
E-3695	A	11.500	9.500					2.375
E-1410	A	12.000	9.813					3.125
E-1420	A	12.000	9.813					5.500
E-1447	A	12.000	9.813					2.125
E-1450	A	12.000	9.813					2.500
E-1500	A	12.000	9.813					3.438
E-1520	A	12.000	9.813					3.000
E-1430	A	12.375	10.875					2.938
E-1440	A	12.500	10.000					5.500
E-1510	A	12.500	10.750					2.625
E-1515	A	12.500	10.750					2.000
E-1530	A	12.500	11.000					2.750
E-1535	A	12.500	11.000					2.875
E-1540	A	12.500	11.000					3.500
E-2855	A	12.500	10.000					2.000
E-3021 [1]	A	12.500	11.000					2.125
E-2865	A	13.000	11.125					2.313
E-3036	A	13.000	11.125					6.000
E-1590	A	13.125	11.625					2.563
E-3698	A	13.125	11.438					2.750
E-3699	A	13.125	11.438					4.000
E-3705	A	13.125	11.625					3.250
E-1550	A	13.250	11.250					1.875
E-1560	A	13.250	11.250					2.188
E-1570	A	13.250	11.500					2.875
E-1577	A	13.250	11.500					2.750
E-1580	A	13.250	11.250					2.500
E-2872	A	13.250	11.500					3.125

1) Inner Support Wire 2) Outer Support Wire 3) Closed Top

Round Filters

Part #	Style	A	B	C	D	E	F	H
E-3700	A	13.250	11.250					4.000
E-2859	A	13.500	11.750					1.500
E-3710	A	13.500	11.750					2.000
E-3717	A	13.500	11.750					2.500
E-3720	A	13.500	11.750					2.750
E-3723	A	13.500	11.750					3.000
E-1690	A	13.750	11.750					4.031
E-1695	A	13.750	11.750					5.500
E-1650	A	14.000	12.000					3.063
E-1651	A	14.000	12.000					3.063
E-3027R	A	14.000	12.250					3.000
E-3028R	A	14.000	12.250					3.250
E-3029R	A	14.000	12.250					3.500
E-3030R	A	14.000	12.250					3.750
E-3031R	A	14.000	12.250					4.000
E-3728R	A	14.000	12.500					3.500
E-3730	A	14.000	12.000					4.000
E-3732	A	14.000	12.000					4.500
E-3735	A	14.000	12.688					2.500
E-3737	A	14.000	12.688					3.000
E-3740	A	14.000	12.000					2.313
E-3742	A	14.000	12.000					2.813
E-3743 [1]	A	14.000	12.000					3.063
E-3745 [1]	A	14.000	12.000					3.500
E-3750 [1]	A	14.000	12.000					4.000
E-3760 [1]	A	14.000	12.000					5.000
E-3770 [1]	A	14.000	12.000					6.000
E-3978XD [2]	A	14.000	11.500					5.000
E-3979XD [2]	A	14.000	11.500					4.000
E-2866	A	14.750	13.000					2.500
E-2867	A	14.750	13.000					3.250
E-3807R	A	15.938	13.313					3.875
E-3022R	A	16.000	14.250					3.000
E-3023R	A	16.000	14.250					3.250
E-3024R	A	16.000	14.250					3.500
E-3025R	A	16.000	14.250					3.750
E-3026R	A	16.000	14.250					4.000
E-3976XD [2]	A	16.000	13.000					5.000
E-3977XD [2]	A	16.000	13.000					4.000
E-3802R	A	16.125	14.375					3.000
E-3804R	A	16.125	14.375					3.500
E-3806R	A	16.125	14.375					4.000
E-1910	A	16.188	13.375					3.000
E-3780	A	16.188	13.375					2.250
E-3786	A	16.188	13.375					3.500
E-3800	A	16.188	13.375					4.000
E-3804	A	16.250	14.500					3.500
E-3804NO	A	16.250	14.500					3.500
E-3806	A	16.250	14.500					4.063
E-3806NO	A	16.250	14.500					4.063
E-3808	A	16.250	14.500					4.500
E-3973	A	16.250	14.500					10.000
E-3974	A	16.250	14.500					20.000
E-3813 [1]	A	17.000	14.500					3.500
E-3814 [1]	A	17.000	14.500					4.000
E-3815 [1]	A	17.000	14.500					5.000
E-3816 [1]	A	17.000	14.500					6.000
E-1920 [1]	A	18.250	15.625					2.750
E-3018	A	20.000	17.500					2.125
E-3820 [1]	A	20.000	17.500					4.000
E-3825 [1]	A	20.000	17.500					6.000

Tapered Conical Filters

Part #	Style	A	B	C	D	E	F	H
SU-2588 [3]	B	3.125	3.000	0	0			3.375
E-4270 [3]	B	3.250	2.875	2.250				4.000
SU-1250 [3]	B	3.500	3.000	2.250	0			5.625
BU-5000 [3]	B	3.813	2.250	2.500				9.063
HA-6098	B	3.813	3.500	2.313				5.438
HA-3500 [3]	B	3.875	3.500					3.875
HA-1004 [3]	B	4.000	3.750					5.000
HA-1004R [3]	B	4.000	3.750					5.000
HA-0700 [3]	B	4.125	3.750	2.375	0			5.250
HA-0783 [3]	B	4.125	3.750	2.375	0			6.125
KA-1700	B	4.438	5.000	2.500	2.500			3.000
RK-3800 [3]	B	4.500	5.500	5.625				2.000
RK-380E [3]	B	4.500	5.500	2.625				2.000
SU-4002 [3]	B	4.500	3.500	2.875	0			5.375
SU-5002 [3]	B	4.500	3.500	2.875	0			5.500
CM-0300 [3]	B	4.625	3.750	3.250	0			4.625
HA-7084 [3]	B	4.625	3.500	0	0			4.500
KA-8088	B	4.625	3.438	3.813	2.438			3.438
YA-3502 [3]	B	4.625	3.500	0	0			6.750
YA-8096 [3]	B	4.625	3.750	0	0			3.438
CM-0200 [3]	B	4.750	3.250	3.000	0			4.250
E-2985 [3]	B	4.750	3.625	3.125				7.875
E-3008	B	4.750	3.500	3.500	2.250			5.000
E-4505	B	4.750	3.500	3.500	2.250			2.500
HA-0900 [3]	B	4.750	5.000	3.750	0			3.875
HA-2504 [3]	B	4.750	4.500	0	0			4.500
HA-3350 [3]	B	4.750	4.500	0	0			5.000
HA-4250 [3]	B	4.750	3.500	0	0			6.000
SU-8086 [3]	B	4.750	3.750	3.500				3.250
KA-7512 [3]	B	4.813	4.625	3.375				7.688
28-4125	B	4.875	2.000	3.875	0.500			16.000
RC-9710 [3]	B	4.921	3.504	2.697				6.654
HA-7580 [3]	B	5.000	4.250	3.000	0			3.625
SU-7588 [3]	B	5.000	3.500	0	0			4.000
SU-7592 [3]	B	5.000	3.500	0	0			4.000
HA-3093 [3]	B	5.125	4.500	0	0			4.188
ML-0850 [3]	B	5.250	5.500					1.875
ML-0920 [3]	B	5.250	5.500	0	0			1.875
HA-2440 [3]	B	5.375	4.375	0	0			3.500
28-4115	B	5.500	2.000	4.500	0.500			16.000
28-4130	B	5.750	2.000	4.750	0.500			16.000
HA-1100	B	5.750	5.375	0	0			2.250
KA-1000 [3]	B	5.750	3.938	4.125	0			3.563
28-4100	B	5.875	2.000	4.875	0.500			10.000
28-4105	B	5.875	2.000	4.875	0.500			8.000
E-9156	B	5.875	3.500	4.625	2.047			2.087
SU-5098	B	5.875	4.938	4.000	3.188			4.000
28-4120	B	6.125	3.000	5.125	1.000			16.000
E-3007 [3]	B	6.250	7.000	5.375				2.750
E-3010 [3]	B	6.250	7.000	5.375				3.250
E-3227 [3]	B	6.250	7.000	5.375				2.750
E-3228 [3]	B	6.250	7.000	5.375				3.250
SU-4000 [3]	B	6.313	5.438					3.000
56-9158	B	6.378	5.748	5.354	4.469			2.480
E-0940 [3]	B	6.500	3.000	3.250	0			7.375
E-0998 [3]	B	6.500	3.000	3.250	0			7.625
KA-1287	B	6.500	4.750	5.313	3.625			2.750
E-3020	B	6.625	5.125	5.250	0			6.000
E-4910 [3]	B	6.625	5.125	5.250				10.000
E-0996 [3]	B	6.906	4.000	3.375				5.000
E-0995 [3]	B	6.938	3.000	3.375	0			6.750
E-9132 [3]	B	7.047	3.563	4.685				2.244
E-2315	B	7.188	5.313	3.938	3.313			3.438
E-3521	B	7.375	5.375	6.375	4.375			3.375

1) Inner Support Wire 2) Outer Support Wire 3) Closed Top

Filter Dimensions by Size

Tapered Conical Filters

Part #	Style	A	B	C	D	E	F	H
28-4131	B	8.000	4.875	6.750	3.813			11.625
E-0945 [3]	B	8.000	3.875	4.438				8.000
KA-2504	B	8.500	6.000	0				3.250
E-2605-1 [3]	B	8.813	5.000	7.125				3.125
E-3012 [3]	B	9.000	4.000	7.500				10.000
E-3520	B	9.000	7.000	7.250	5.250			3.500
E-2606 [3]	B	10.125	6.000	7.313				3.000
E-9192 [3]	B	10.500	9.000	9.750	7.500			1.250
28-4215 [3]	B	11.000	5.875	9.000				8.875
E-9233 [3]	B	12.750	9.438	10.438				2.500
E-3013	B	18.500	16.500	15.000	15.000			2.125

Triangle Filters

Part #	Style	A	B	C	D	E	F	H
YA-4074	C	3.000		2.000				4.875
HA-1050 [3]	C	3.750		2.500				4.188
TB-0410 [3]	C	7.500		6.250				1.625
E-1970	C	16.250		14.000				1.750

Rectangular Filters

Part #	Style	A	B	C	D	E	F	H
YA-1201	E	3.750	3.688	2.125	1.172			2.000
YA-0700	E	4.000	2.625	0	0			3.500
YA-1100	E	4.250	4.250	0	0			3.000
YA-5001	E	4.250	0	0	4.000			3.000
YA-1050 [3]	E	4.563	4.000	0	0			3.000
KA-1600 [3]	E	4.750	4.375	3.750	3.375			3.375
YA-4092 [3]	E	5.000	4.875					2.688
YA-1892 [3]	E	5.250	2.875	0	0			2.625
E-3900	E	6.625	4.250	5.875	3.375			1.688
E-3910	E	6.625	4.250	5.875	3.375			1.875
E-3920	E	6.625	4.250	5.875	3.375			3.000
E-3930	E	6.625	4.250	5.875	3.375			3.500
E-3951	E	6.750	4.500	5.750	3.500			1.875
E-3952	E	6.750	4.500	5.750	3.500			2.500
E-3953	E	6.750	4.500	5.750	3.500			3.000
E-3954	E	6.750	4.500	5.750	3.500			4.125
E-4965	E	6.813	2.750	0.875	1.500			3.000
KA-4091	E	7.000	3.875	0	0			3.188
E-9038-1	E	7.441	6.260	6.102	4.921			2.283
E-9040-1	E	7.480	6.102	6.102	4.921			3.661
E-9248	E	7.480	6.181	6.102	4.961			3.819
E-3960	E	7.500	6.125	6.125	4.750			1.750
E-9247	E	7.598	6.378	6.063	4.921			2.756
HD-1388 [3]	E	8.438	5.250	0	0			1.750
HD-8834	E	8.438	5.250	0	0			1.500
E-9138	E	8.469	6.625	6.844	4.688			3.719
E-9165	E	8.781	5.438	6.969	3.625			4.656
KA-9006	E	10.000	8.375					1.125
SU-1200 [3]	E	10.250	2.875	9.500	1.750			1.875
KA-0883 [3]	E	11.250	3.500	0	0			2.188
E-2925	E	11.500	8.500	9.500	6.500			2.750
E-9071	E	12.000	9.000	10.750	7.750			1.688
KA-9084 [3]	E	12.000	2.750	10.969	1.188			2.563
E-9030	E	13.000	7.625	11.250	5.875			2.000
E-2930	E	14.750	12.000	13.375	10.625			2.250
E-9068	E	17.008	12.008	15.433	10.433			3.780
E-9017	E	17.125	6.031					2.125
E-9083	E	17.125	6.031					3.594
E-3817	E	17.875	10.125	15.500	7.750			2.250

Oval Filters

Part #	Style	A	B	C	D	E	F	H
HA-1088 [3]	F							3.000
HA-4098 [3]	F			2.375	1.500			5.688

Oval Filters

Part #	Style	A	B	C	D	E	F	H
HA-4099 [3]	F							4.500
KA-5090 [3]	F							3.438
SU-2391 [3]	F			3.063	2.250			4.000
TB-9002	F	0	6.000	0	0			4.250
YA-6098 [1,3]	F	0	0	4.250	3.000			3.000
E-4250	F	4.063	3.063	2.813	1.813			1.625
KA-0006 [3]	F	4.063	4.875	0	0			6.188
TB-8002	F	4.250	3.313	0	0			5.500
TB-9004	F	4.250	3.313	0	0			6.750
YA-0075 [3]	F	4.250	3.000	3.250	2.000			3.500
AT-6091 [3]	F	4.375	3.250	0	0			6.750
TB-1610 [3]	F	4.375	3.438	3.313	2.438			5.125
E-4900	F	4.500	2.875	3.375	1.750			2.250
MG-2640	F	4.500	3.500	0	0			3.250
SU-4230	F	4.500	3.250	0	0			4.125
KA-7587	F	4.625	2.250	3.625	1.313			4.469
HA-0750 [3]	F	4.750	3.500	3.500	2.250			4.125
YA-1078 [3]	F	4.750	3.125	3.750	2.125			2.375
BU-1297 [3]	F	5.000	3.500					3.500
HA-1013-1	F	5.000	3.000					7.438
KA-1192	F	5.000	4.125	3.000	2.125			6.313
E-9241	F	5.354	3.150	4.409	2.165			6.654
E-9121 [3]	F	5.375	4.250	7.087	4.331			7.000
YA-1399 [3]	F	5.375	3.750					3.750
HA-0008	F	5.500	3.375	4.188	2.125			2.625
KA-0800 [3]	F	5.500	4.000	4.250	2.750			2.875
KA-1594 [3]	F	5.500	4.563	0	0			1.813
SU-1691 [3]	F	5.500	4.250	4.500	3.250			2.000
E-2868	F	5.625	4.000	3.875	2.250			6.313
KA-6589	F	5.625	4.125	4.125	2.625			2.500
HA-1187 [3]	F	6.000	3.500	4.750	2.250			5.000
HA-7500 [3]	F	6.000	3.500					2.875
YA-1089	F	6.125	4.813	3.875	2.625			4.250
YA-6094	F	6.125	4.813	3.875	2.625			4.000
TB-2204	F	6.188	4.000					6.813
KA-1150 [3]	F	6.250	4.000	5.000	2.750			3.688
YA-1550 [3]	F	6.250	4.000	5.000	2.750			2.500
HA-1210 [3]	F	6.375	4.375	5.125	3.125			2.313
YA-2088	F	6.375	4.750	5.375	3.750			2.750
E-3011	F	6.500	4.250	5.250	3.000			4.000
E-9098	F	6.500	3.000	4.750	1.125			2.125
HA-8080 [3]	F	6.500	4.625	5.250	3.375			3.688
SU-0007-A [3]	F	6.500	4.250	0	0			4.000
E-1004	F	6.625	4.625	5.250	3.250			8.375
E-2292	F	6.625	2.750	5.625	1.750			2.375
E-2873	F	6.625	5.625	5.375	4.375			7.000
PL-1002	F	6.625	3.813	5.375	2.625			3.438
SU-3590	F	6.625	3.750	5.625	2.750			2.500
SU-6590 [3]	F	6.625	4.625	5.250	3.250			2.875
YA-1595 [3]	F	6.625	3.813	0	0			3.250
E-4511 [3]	F	6.750	2.375	5.500	1.125			1.938
E-4551 [2]	F	6.813	4.188	5.188	2.563			4.000
E-9269	F	6.875	5.250	4.344	2.875			9.313
HD-2084	F	6.875	5.875	5.625	4.500			2.375
E-3321	F	7.000	4.500	6.125	3.625			1.750
E-3324	F	7.000	4.500	6.125	3.625			2.250
E-3325	F	7.000	4.500	6.125	3.625			2.750
E-3341	F	7.000	4.500	6.125	3.625			3.313
HA-0800	F	7.000	4.500	5.750	3.250			4.650
HA-1294	F	7.000	4.500	5.750	3.250			3.688
HA-1303	F	7.000	4.000	5.750	2.750			3.313
HA-8084 [3]	F	7.000	4.500	5.750	3.250			3.813
HA-8085 [3]	F	7.000	4.500	5.750	3.250			3.813
YA-3586 [3]	F	7.000	3.750	0	0			2.250

1) Inner Support Wire 2) Outer Support Wire 3) Closed Top

Oval Filters

Part #	Style	A	B	C	D	E	F	H
PL-1598 [3]	F	7.063	3.750					4.875
HA-2584	F	7.125	5.000	5.875	3.750			2.750
HA-1312	F	7.375	4.000	6.125	2.750			2.063
HA-1314 [3]	F	7.375	4.000	6.125	2.750			2.313
HA-1315	F	7.375	4.000	6.125	2.750			2.500
KA-7408	F	7.500	5.500	7.500	5.500			4.750
YA-1300	F	7.500	1.625	0	0			2.875
SU-5503 [3]	F	7.625	3.313	6.375	2.063			1.688
YA-1285 [3]	F	7.625	3.250					4.563
HA-1302	F	7.750	3.313	3.438	2.031			4.563
HA-6592 [3]	F	7.750	4.750	6.875	2.938			2.500
KA-7504	F	7.750	5.875	0	0			5.063
E-1931	F	7.875	5.063	6.625	3.813			4.250
SU-7596 [3]	F	8.000	5.375	0	0			3.250
E-9249	F	8.071	5.315	3.740	1.693			8.071
HA-1079 [3]	F	8.500	3.750	6.750	2.000			2.500
HA-1245 [3]	F	8.500	3.750	6.500	1.750			2.875
HA-1250 [3]	F	8.500	3.750	6.500	1.750			3.188
E-3014	F	8.813	6.188	0	0			1.625
E-1935	F	8.875	4.375	6.875	2.375			5.875
E-2890	F	8.875	4.375	6.875	2.375			3.750
E-3441	F	8.875	5.250	7.375	3.750			1.750
E-3442	F	8.875	5.250	7.375	3.750			2.000
E-3461	F	8.875	5.250	7.500	3.986			3.250
E-3471	F	8.875	5.250	7.375	3.750			4.500
E-3481	F	8.875	5.250	7.375	3.750			5.500
E-3491	F	8.875	5.250	7.375	3.750			6.000
AC-1009 [3]	F	8.938	5.875	7.563	4.500			2.000
E-2871	F	9.000	5.375	6.500	2.875			5.750
E-3445	F	9.000	5.500	8.000	4.500			1.750
E-3446	F	9.000	5.500	8.000	4.500			2.750
E-3017	F	9.250	8.750					3.000
E-3495	F	9.250	8.375					2.125
E-3040	F	9.375	6.125					2.250
E-9032	F	9.750	6.750	6.875	3.750			4.250
HD-0200	F	9.750	5.500	8.375	4.250			2.063
HD-2075	F	9.750	5.500	8.375	4.250			2.438
HD-2076	F	9.750	5.500	8.375	4.250			3.000
HD-2078	F	9.750	5.625	8.375	4.375			3.000
MG-0100	F	10.000	6.250	8.500	4.750			2.250
E-1940	F	10.438	8.438	8.875	6.875			1.875
E-1950	F	10.625	9.250	9.125	7.750			2.125
E-1955	F	10.625	9.250	9.125	7.750			4.000
E-2980	F	10.750	8.500	9.000	6.625			1.750
E-2983	F	10.750	8.500	9.000	6.625			2.438
E-9236	F	11.024	9.606	7.323	5.906			2.441
E-1957	F	11.063	6.500	9.625	5.000			3.500
E-2920	F	11.125	9.250	9.188	7.313			1.844
E-2863	F	11.250	10.250	9.500	8.500			2.500
E-2877 [3]	F	11.250	7.875	8.250	4.875			3.750
E-9172	F	11.406	7.188	9.500	5.438			1.563
E-9136	F	11.438	7.875	9.625	6.125			2.375
E-3504	F	11.500	8.125	9.750	6.375			4.000
E-3505	F	11.500	8.125	9.750	6.375			2.000
E-0785 [3]	F	11.750	5.875	0	0			9.000
E-3671	F	12.000	5.250	10.750	4.000			3.250
E-3672	F	12.000	5.250	10.750	4.000			2.250
E-3676	F	12.000	5.250	10.750	4.000			5.625
E-9166	F	12.205	7.205	10.433	5.512			3.071
E-1946	F	12.250	5.500	9.688	3.000			6.000
E-2428	F	12.250	9.000	11.375	8.125			2.375
TB-0300	F	12.250	4.750	0	0			1.500
E-2874	F	12.375	8.500	9.875	6.000			2.250
E-3122	F	12.625	5.000	10.875	3.250			2.375

Oval Filters

Part #	Style	A	B	C	D	E	F	H
E-9110	F	12.625	9.000	10.875	7.250			1.750
E-2940	F	12.750	8.500	10.500	5.875			2.500
E-2990	F	12.875	4.875	11.250	3.000			3.188
E-9090 [3]	F	13.000	8.375	11.750	7.125			1.813
E-9091	F	13.875	9.500	12.000	7.625			1.875
E-1958	F	14.250	7.750	12.500	6.000			1.938
E-9201	F	14.500	8.000	11.750	5.250			2.875
E-2970	F	14.625	6.500	12.375	4.250			1.844
E-3514	F	14.625	7.750	13.000	6.188			4.000
E-3515	F	14.625	7.750	13.000	6.188			2.000
E-2880	F	15.750	4.625	14.000	2.875			1.938
E-2910	F	16.125	5.500	14.500	3.625			2.375
E-2900	F	16.250	5.500	14.500	3.625			2.000
E-9178	F	17.500	9.875	15.750	8.125			2.250
E-1980	F	19.750	15.750	17.750	13.750			2.000
E-3840	F	19.750	15.750	17.750	13.750			3.000
RP-4820	F	20.250	8.250	18.875	6.875			7.625
E-1960	F	20.813	9.500	18.313	7.000			1.813
E-1963	F	20.813	9.500	18.313	7.000			3.000
E-1966	F	20.813	9.500	18.313	7.000			6.000
E-3035	F	20.813	9.500	18.313	7.000			4.000
E-3001	F	22.000	11.125	20.125	9.250			6.000
E-2950 [1]	F	24.125	5.625	22.750	4.250			2.438
E-2960 [1]	F	24.125	5.625	22.750	4.250			2.125

Panel Filters

Part #	Style	A	B	C	D	E	F	H
BM-6507	G	4.875	3.125					1.563
HA-0502	G	5.125	4.375					1.000
33-2238	G	5.188	4.438					0.625
43-9074	G	5.354	3.504					1.181
YA-1306	G	5.438	4.625					1.125
YA-1602-U	G	5.438	4.313					0.688
KT-1211	G	5.563	4.313					1.563
BM-1199	G	5.625	4.313					1.313
33-2709	G	5.750	5.750					0.875
KA-0009	G	5.750	5.250					0.688
BM-1204	G	5.875	3.500					1.250
YA-5008	G	5.875	4.375					1.000
MG-0001	G	5.984	4.449					1.220
BM-8006	G	6.000	3.625					1.438
BA-1801	G	6.250	5.500					0.688
BA-2201	G	6.281	5.625					0.938
33-2633	G	6.375	4.625					0.938
HA-2511	G	6.438	4.438					0.938
33-2008-1	G	6.625	6.625					1.625
33-2060	G	6.625	6.188					1.063
CM-9910	G	6.688	4.938					1.500
33-2561	G	6.693	11.339					1.181
33-2359	G	6.750	5.813					1.250
33-2459	G	6.750	6.000					1.063
33-2422	G	6.813	6.688					1.000
33-2544	G	6.938	3.500					0.875
AL-6505	G	6.938	3.500					1.500
33-2584	G	6.969	3.346					0.689
33-2159	G	7.063	5.438					1.188
33-2258	G	7.125	6.313					1.313
33-2399	G	7.125	6.625					1.000
33-2433	G	7.125	6.000					1.250
AL-4506	G	7.188	5.125					1.000
33-2634	G	7.219	6.656					0.938
33-2860	G	7.250	3.000					1.188
PL-1608	G	7.250	4.250					1.000
33-2307	G	7.375	4.313					0.938

1) Inner Support Wire 2) Outer Support Wire 3) Closed Top

Filter Dimensions by Size

Panel Filters

Part #	Style	A	B	C	D	E	F	H
33-2348	G	7.375	7.000					0.938
AL-1004	G	7.375	5.188					0.813
HD-1208	G	7.375	3.750					0.875
KA-7589	G	7.375	5.688					0.625
33-2202	G	7.438	6.563					1.188
33-2880	G	7.469	6.496					1.181
SU-9094	G	7.500	7.250					0.625
33-2022	G	7.563	5.938					1.563
33-2162	G	7.563	6.125					0.875
33-2450	G	7.563	3.188					1.313
33-2464	G	7.563	7.125					1.188
33-2836	G	7.563	6.875					1.000
YA-1208	G	7.563	5.063					1.000
33-2790	G	7.594	6.219					0.969
SU-6000	G	7.625	5.313					0.813
SU-6505	G	7.625	5.250					0.875
TB-6000	G	7.625	3.938					0.813
33-2143	G	7.688	6.063					1.125
33-2291	G	7.688	6.125					0.938
33-2564	G	7.750	5.813					1.125
33-2736	G	7.781	5.938					1.188
33-2092	G	7.813	3.625					1.125
KT-6908	G	7.813	4.750					1.625
33-2044	G	7.875	7.000					1.125
33-2104	G	7.875	7.563					0.938
33-2440	G	7.875	7.063					1.438
33-2597	G	7.875	6.688					1.188
33-2955	G	7.875	6.375					1.063
33-2735	G	7.906	5.563					1.188
33-2827	G	7.952	7.520					1.181
33-2006	G	8.000	5.125					1.250
33-2380	G	8.000	7.500					1.000
33-2788	G	8.000	9.313					1.188
33-2935	G	8.000	8.313					1.000
BM-0300	G	8.000	6.375					1.688
33-2796	G	8.031	6.378					0.945
33-2098	G	8.063	6.375					1.000
33-2222	G	8.063	5.875					1.125
33-2234	G	8.063	7.125					1.000
33-2821	G	8.063	7.125					1.188
33-2421	G	8.125	7.625					1.375
33-2813	G	8.125	6.688					1.125
33-2971	G	8.125	7.875					1.625
CM-9908	G	8.125	5.250					0.875
33-2740	G	8.156	6.688					1.250
33-2866	G	8.188	6.500					1.250
33-2592	G	8.189	6.654					1.299
33-2758	G	8.228	5.551					1.181
33-2003	G	8.250	8.125					1.563
33-2340	G	8.250	6.250					1.125
33-2436	G	8.250	9.813					1.125
AL-1002	G	8.250	5.375					1.000
DU-9098	G	8.250	8.250					1.188
KA-2508	G	8.250	5.375					0.625
33-2105	G	8.313	8.063					2.000
33-2795	G	8.313	8.000					1.000
SU-7593	G	8.375	7.375					0.688
33-2239	G	8.438	6.375					0.875
HA-1010	G	8.438	3.000					1.125
YA-1709	G	8.438	5.563					1.000
33-2515	G	8.469	4.438					1.188
33-2037	G	8.500	5.875					0.875
33-2853	G	8.500	6.500					0.938
33-2914	G	8.500	6.688					0.938

Panel Filters

Part #	Style	A	B	C	D	E	F	H
DU-0900	G	8.500	8.375					0.750
PL-5003	G	8.500	8.438					1.063
33-2074	G	8.625	8.000					1.688
KT-6907	G	8.625	4.625					1.000
33-2770	G	8.661	7.402					1.260
33-2435	G	8.688	7.344					1.125
BM-2605	G	8.688	7.688					0.938
33-2036	G	8.750	6.500					1.000
33-2304	G	8.750	8.563					0.938
33-2954	G	8.750	4.750					1.125
CG-9002	G	8.750	5.250					1.000
33-2073	G	8.813	8.188					0.938
33-2120	G	8.813	6.500					1.125
33-2301	G	8.813	6.500					1.063
33-2409	G	8.813	6.625					1.000
33-2702	G	8.813	8.563					1.063
YA-8596	G	8.813	4.500					0.875
33-2615	G	8.844	6.688					1.188
33-2045	G	8.875	8.875					0.875
33-2067	G	8.875	7.375					1.000
33-2400	G	8.875	8.625					1.000
33-2671	G	8.875	6.500					0.938
33-2682	G	8.875	5.250					1.063
33-2972	G	8.875	8.250					1.625
BM-1611	G	8.875	4.000					1.625
33-2288	G	8.938	8.625					1.000
33-2338	G	8.938	6.063					0.938
33-2990	G	8.938	8.000					1.250
33-2027	G	9.000	7.750					1.500
33-2106-1	G	9.000	7.688					1.188
33-2224	G	9.000	7.438					1.125
33-2237	G	9.000	7.500					1.188
33-2533	G	9.000	6.438					0.813
33-2993	G	9.000	4.625					1.625
TB-9097	G	9.000	3.938					1.063
33-2155	G	9.063	7.938					1.000
33-2455	G	9.063	8.625					1.063
33-2076	G	9.125	9.188					1.250
33-2117	G	9.125	7.750					1.188
33-2156	G	9.125	7.063					1.063
33-2375	G	9.125	5.250					0.875
33-2479	G	9.125	4.000					1.031
33-2586	G	9.125	3.563					0.938
33-2679	G	9.125	6.125					0.938
33-2824	G	9.125	5.750					1.063
BM-1010	G	9.125	6.156					1.125
BM-1010R	G	9.125	6.156					1.125
33-2285	G	9.188	8.563					0.813
33-2452	G	9.188	9.000					1.000
33-2470	G	9.188	9.000					1.125
33-2547	G	9.188	5.125					1.188
33-2873	G	9.188	8.063					1.000
33-3003	G	9.188	8.375					1.063
33-2070	G	9.250	6.875					1.000
33-2227	G	9.250	7.500					1.125
33-2334	G	9.250	8.750					1.188
33-2398	G	9.250	8.875					1.000
33-2418	G	9.250	8.125					1.250
33-2430	G	9.250	8.125					1.250
33-2733	G	9.250	9.000					1.188
33-2767	G	9.250	7.750					1.125
33-2887	G	9.250	7.500					1.188
33-2927	G	9.250	5.500					1.125
33-2933	G	9.250	8.000					1.000

1) Inner Support Wire 2) Outer Support Wire 3) Closed Top

Panel Filters

Part #	Style	A	B	C	D	E	F	H
33-2978	G	9.250	7.000					1.063
33-2072	G	9.313	7.438					1.000
33-2188	G	9.313	7.375					1.125
33-2206	G	9.313	8.375					1.063
33-2119	G	9.375	8.000					1.188
33-2231	G	9.375	6.875					1.063
33-2245	G	9.375	6.500					1.125
33-2305	G	9.375	7.063					0.938
33-2310	G	9.375	7.125					1.125
33-2419	G	9.375	8.375					1.250
33-2423	G	9.375	8.375					1.125
33-2468	G	9.375	7.250					1.063
33-2639	G	9.375	6.875					1.188
33-2771	G	9.375	7.375					1.125
33-2826	G	9.375	5.500					0.938
33-2951	G	9.375	9.375					1.375
33-2992	G	9.375	7.688					1.625
33-2113	G	9.438	5.688					0.875
33-2318	G	9.438	7.125					1.125
33-2595	G	9.438	6.406					1.188
33-2658	G	9.438	8.594					1.188
33-2063-1	G	9.500	7.188					1.063
33-2242	G	9.500	6.063					1.125
33-2373	G	9.500	8.500					1.250
33-2476	G	9.500	6.750					1.125
33-2548-A	G	9.500	8.250					1.063
33-2957	G	9.500	7.188					1.625
33-2890	G	9.528	8.937					1.250
33-2054	G	9.563	8.125					1.313
33-2136	G	9.563	7.125					1.000
33-2199	G	9.563	7.625					0.938
33-2282	G	9.563	6.375					0.938
33-2429	G	9.563	7.875					0.875
33-2510	G	9.563	6.688					1.188
33-2918	G	9.563	9.563					0.938
33-2134	G	9.625	6.188					0.875
33-2171	G	9.625	6.563					0.875
33-2241	G	9.625	8.125					1.375
33-2360	G	9.625	6.938					1.000
33-2443	G	9.625	8.750					1.125
33-2457	G	9.625	8.875					1.250
33-2802	G	9.625	8.000					1.000
33-2849	G	9.625	7.500					1.250
33-2952	G	9.625	4.750					1.500
33-2968	G	9.625	5.750					1.625
33-2793	G	9.645	7.717					0.944
33-2534	G	9.656	5.563					1.188
33-2170	G	9.688	8.188					1.313
33-2182	G	9.688	6.563					1.125
33-2265	G	9.688	8.250					1.375
33-2833	G	9.688	8.313					1.063
33-2881	G	9.724	4.606					1.181
33-2034	G	9.750	5.938					1.000
33-2077	G	9.750	9.625					1.063
33-2093	G	9.750	6.250					1.125
33-2161	G	9.750	6.188					1.063
33-2204	G	9.750	8.250					1.063
33-2211	G	9.750	4.688					0.813
33-2445	G	9.750	6.313					1.000
33-2748-1	G	9.750	6.750					0.938
33-2949	G	9.750	5.875					1.000
33-2960	G	9.750	5.125					1.000
33-2979	G	9.750	3.625					1.250
33-2112	G	9.813	8.813					1.188

Panel Filters

Part #	Style	A	B	C	D	E	F	H
33-2149	G	9.813	8.188					1.125
33-2500	G	9.813	6.000					1.188
33-2525	G	9.813	6.500					0.875
33-2013	G	9.875	8.250					1.625
33-2041-1	G	9.875	6.188					0.938
33-2125	G	9.875	8.250					0.750
33-2147	G	9.875	8.000					0.875
33-2151	G	9.875	8.375					1.938
33-2167	G	9.875	7.875					0.938
33-2523	G	9.875	6.500					0.938
33-2609	G	9.875	7.281					1.188
33-2680	G	9.875	5.938					1.188
33-2929	G	9.875	5.250					1.125
33-2033	G	9.938	9.938					0.875
33-2050-1	G	9.938	6.750					1.063
33-2095	G	9.938	8.875					1.063
33-2137	G	9.938	8.500					1.063
33-2142	G	9.938	8.250					1.188
33-2150	G	9.938	7.063					0.875
33-2153	G	9.938	7.438					1.125
33-2675	G	9.938	8.250					1.125
33-2744	G	9.938	8.938					1.188
33-2794	G	9.938	8.000					0.906
33-2804	G	9.938	6.875					1.188
33-2059	G	10.000	5.750					1.063
33-2081	G	10.000	7.625					1.250
33-2094	G	10.000	4.813					1.125
33-2107	G	10.000	7.250					1.188
33-2187	G	10.000	7.188					0.813
33-2201	G	10.000	6.813					1.188
33-2627	G	10.000	7.125					1.063
33-2862	G	10.000	8.500					1.125
33-2930	G	10.000	4.625					1.000
33-2964	G	10.000	9.750					1.625
SU-6509	G	10.000	9.938					1.000
33-2629	G	10.031	7.750					0.781
33-2026	G	10.063	6.813					1.188
33-2055	G	10.063	5.500					0.875
33-2205	G	10.063	9.125					1.125
33-2351	G	10.063	6.313					1.188
33-2665	G	10.063	9.219					1.188
33-2676	G	10.063	6.375					0.938
33-2977	G	10.063	4.063					0.875
YA-1009	G	10.063	5.813					0.813
YA-1009R	G	10.063	5.813					0.813
33-2131	G	10.125	4.563					0.813
33-2198	G	10.125	6.938					0.875
33-2451	G	10.125	6.500					0.875
33-2700	G	10.125	8.125					0.875
33-2729	G	10.125	4.125					0.875
33-2800	G	10.125	8.750					1.000
33-2973	G	10.125	7.250					1.125
33-2727	G	10.156	4.938					1.250
33-2009	G	10.188	6.625					1.250
33-2016	G	10.188	8.750					1.625
33-2298	G	10.188	9.500					1.000
33-2473	G	10.188	6.375					1.063
33-2664	G	10.188	10.063					1.188
33-2753	G	10.188	7.000					1.063
33-2477	G	10.219	7.875					1.125
33-2618	G	10.219	5.563					1.188
33-2157	G	10.250	6.500					1.125
33-2403	G	10.250	8.000					1.000
33-2415	G	10.250	6.500					0.938

1) Inner Support Wire 2) Outer Support Wire 3) Closed Top

Filter Dimensions by Size

Panel Filters

Part #	Style	A	B	C	D	E	F	H
33-2417	G	10.250	4.313					1.250
33-2734	G	10.250	9.625					1.188
33-2934	G	10.250	8.000					1.125
33-2961	G	10.250	6.688					1.250
33-2986	G	10.250	3.750					1.500
TB-1011	G	10.250	5.375					1.063
33-2168	G	10.313	7.063					1.125
33-2209	G	10.313	8.250					1.125
33-2312	G	10.313	7.500					0.938
33-2737	G	10.313	7.938					1.125
33-2874	G	10.313	6.844					1.188
33-2069	G	10.375	8.938					0.938
33-2196	G	10.375	5.625					1.188
33-2437	G	10.375	7.500					1.500
33-2444	G	10.375	10.250					1.188
33-2667	G	10.375	6.625					1.188
33-2819	G	10.375	5.625					1.063
33-2185	G	10.438	4.500					1.188
33-2357	G	10.438	6.250					1.063
33-2453	G	10.438	9.000					1.000
33-2647	G	10.438	4.125					1.125
33-2579	G	10.472	5.315					0.709
33-2049	G	10.500	6.625					1.000
33-2141-1	G	10.500	7.875					0.938
33-2381	G	10.500	7.188					1.125
33-2385	G	10.500	9.875					1.000
33-2414	G	10.500	7.063					1.250
33-2424	G	10.500	6.250					1.188
33-2761	G	10.500	4.563					1.188
33-2762	G	10.500	4.219					1.188
33-2958	G	10.500	8.750					1.000
33-2966	G	10.500	10.281					1.250
33-2974	G	10.500	6.563					1.125
33-2980	G	10.500	7.438					1.438
33-2997	G	10.500	8.563					1.250
33-2290	G	10.563	4.563					1.250
33-2672	G	10.563	6.750					0.813
33-2002	G	10.625	5.000					1.625
33-2010	G	10.625	6.125					1.375
33-2268	G	10.625	7.375					1.250
33-2354	G	10.625	5.313					1.000
33-2378	G	10.625	6.875					1.000
33-2392	G	10.625	7.438					1.438
33-2472	G	10.625	5.750					1.000
33-2521	G	10.625	7.375					0.875
33-2953	G	10.625	9.250					1.125
33-2963	G	10.625	10.000					0.875
HA-6007R	G	10.625	5.500					1.250
33-2053	G	10.688	8.125					1.313
33-2086	G	10.688	8.000					1.125
33-2087	G	10.688	5.188					1.313
33-2250	G	10.688	8.000					1.125
33-2270	G	10.688	6.375					1.063
33-2316	G	10.688	7.938					1.063
33-2649	G	10.688	7.125					1.125
33-2846	G	10.688	6.750					1.250
33-2981	G	10.688	5.438					1.063
33-2701	G	10.719	10.563					1.188
33-2124	G	10.750	6.563					0.813
33-2180	G	10.750	5.563					0.938
33-2246	G	10.750	9.750					0.875
33-2428	G	10.750	10.250					1.250
33-2759	G	10.750	8.625					1.188
33-2839	G	10.750	7.188					1.188

Panel Filters

Part #	Style	A	B	C	D	E	F	H
33-2068	G	10.813	6.563					1.063
33-2293	G	10.813	7.313					1.125
33-2861	G	10.813	7.000					1.188
33-2017	G	10.875	10.250					1.188
33-2126	G	10.875	5.250					0.750
33-2229	G	10.875	7.313					1.125
33-2397	G	10.875	7.125					1.000
33-2663	G	10.875	6.250					1.125
33-2886	G	10.875	6.750					1.250
33-2091-1	G	10.938	7.125					0.938
33-2166	G	10.938	6.188					1.125
33-2253	G	10.938	9.750					0.938
33-2325	G	10.938	9.750					0.938
33-2921	G	10.938	6.375					0.813
33-2031-2	G	11.000	6.563					1.125
33-2075	G	11.000	6.563					1.063
33-2110	G	11.000	7.313					1.125
33-2232	G	11.000	6.563					1.063
33-2249	G	11.000	9.063					0.938
33-2297	G	11.000	9.875					1.625
33-2343	G	11.000	6.250					0.875
33-2439	G	11.000	8.875					1.250
33-2448	G	11.000	9.000					1.000
33-2454	G	11.000	7.000					1.000
33-2969	G	11.000	7.875					1.000
DU-9001	G	11.000	8.563					0.938
KA-6005	G	11.000	4.563					1.500
33-2598	G	11.031	7.406					1.188
33-2080	G	11.063	7.063					1.063
33-2214	G	11.063	7.438					1.063
33-2296	G	11.063	9.125					0.938
33-2526	G	11.063	8.188					1.188
33-2704	G	11.063	6.688					1.188
33-2870	G	11.063	4.813					1.125
33-2877	G	11.063	7.469					1.188
DU-6202	G	11.063	8.563					0.875
33-2221	G	11.125	7.375					1.125
33-2458	G	11.125	10.500					1.000
33-2532	G	11.125	10.438					1.188
33-2841	G	11.125	6.313					1.000
33-2854	G	11.125	7.594					0.938
33-2931	G	11.125	3.875					1.000
33-2892	G	11.142	9.803					1.339
33-2746	G	11.156	10.313					1.188
33-2728	G	11.181	3.819					0.866
33-2755	G	11.181	8.346					1.260
33-2024	G	11.188	6.125					1.125
33-2255	G	11.188	5.813					1.125
33-2336	G	11.188	6.625					0.938
33-2752	G	11.188	5.906					1.188
33-2779	G	11.188	9.938					1.125
33-2654	G	11.219	5.500					0.875
33-2012	G	11.250	7.500					1.500
33-2015	G	11.250	8.875					1.063
33-2127	G	11.250	6.500					1.813
33-2212	G	11.250	8.000					1.125
33-2223	G	11.250	6.563					0.875
33-2272	G	11.250	7.563					1.125
33-2371	G	11.250	5.375					1.000
33-2513	G	11.250	6.563					1.188
33-2543	G	11.250	8.188					1.188
33-2708	G	11.250	7.250					0.813
33-2956	G	11.250	9.000					1.438
PL-5712	G	11.250	8.188					1.438

1) Inner Support Wire 2) Outer Support Wire 3) Closed Top

Panel Filters

Part #	Style	A	B	C	D	E	F	H
33-2726	G	11.259	5.275					1.181
33-2289	G	11.313	9.000					1.000
33-2976	G	11.313	10.375					1.688
PL-9011	G	11.313	9.875					1.500
33-2020	G	11.375	6.563					1.563
33-2048	G	11.375	9.625					1.063
33-2116	G	11.375	9.000					0.938
33-2139	G	11.375	9.688					0.875
33-2235	G	11.375	9.000					0.938
33-2252	G	11.375	5.875					1.000
33-2286	G	11.375	9.625					1.000
33-2287	G	11.375	8.500					0.938
33-2300	G	11.375	5.875					1.063
33-2442	G	11.375	10.125					1.000
33-2469	G	11.375	6.500					1.000
33-2962	G	11.375	10.125					1.625
33-2970	G	11.375	8.000					0.875
33-2991	G	11.375	7.000					1.688
33-2603	G	11.406	5.313					0.719
33-2195	G	11.438	7.875					0.938
33-2225	G	11.438	5.813					1.125
33-2233	G	11.438	8.500					1.125
33-2295	G	11.438	8.313					1.063
33-2314	G	11.438	9.063					1.063
33-2725	G	11.438	3.375					1.125
33-2787	G	11.438	9.125					1.188
33-2589	G	11.496	6.417					1.181
33-2040	G	11.500	9.188					0.875
33-2042	G	11.500	6.000					1.125
33-2213	G	11.500	8.688					1.188
33-2254	G	11.500	7.313					1.125
33-2363	G	11.500	9.000					1.125
33-2410	G	11.500	7.156					1.875
33-2420	G	11.500	8.500					1.625
33-2673	G	11.500	3.938					1.188
33-2703	G	11.500	8.813					1.000
33-2273	G	11.563	6.750					1.125
33-2038	G	11.625	7.125					0.875
33-2228	G	11.625	6.375					1.125
33-2315	G	11.625	7.125					1.313
33-2434	G	11.625	9.125					1.625
33-2447	G	11.625	8.313					1.000
33-2699	G	11.625	3.313					1.125
33-2850	G	11.625	6.000					1.188
BU-1108	G	11.625	7.375					0.750
33-2065	G	11.688	5.313					0.875
33-2271	G	11.688	9.250					0.938
33-2308	G	11.688	5.438					1.000
33-2333	G	11.688	8.813					1.125
33-2337	G	11.688	9.188					1.000
33-2475	G	11.688	7.125					1.250
33-2982	G	11.688	7.813					1.063
33-2994	G	11.688	11.063					1.219
33-2593	G	11.693	7.913					1.181
33-2057	G	11.750	8.250					0.938
33-2096	G	11.750	6.563					1.000
33-2370	G	11.750	7.813					1.000
33-2632	G	11.750	6.250					1.000
33-2705	G	11.750	6.625					1.250
33-2799	G	11.811	10.709					0.906
33-2207	G	11.813	7.438					1.000
33-2463	G	11.813	5.875					1.063
33-2505	G	11.844	3.500					0.938
33-2056	G	11.875	10.750					1.750

Panel Filters

Part #	Style	A	B	C	D	E	F	H
33-2203	G	11.875	8.250					1.063
33-2275	G	11.875	8.438					0.938
33-2366	G	11.875	7.000					1.125
33-2427	G	11.875	9.000					1.000
33-2461	G	11.875	6.688					1.063
33-2851	G	11.875	6.813					1.188
33-2852	G	11.875	9.313					1.063
33-2926	G	11.875	5.625					1.500
33-2085	G	11.938	5.188					1.125
33-2218	G	11.938	5.250					1.250
33-2335	G	11.938	6.313					1.063
33-2772	G	11.938	4.375					1.125
33-2858	G	11.938	6.750					1.188
33-2988	G	11.938	5.438					1.625
33-2079	G	12.000	7.125					1.125
33-2165	G	12.000	5.750					1.125
33-2309	G	12.000	6.813					0.938
33-2358	G	12.000	7.625					0.938
33-2368	G	12.000	6.500					0.875
33-2383	G	12.000	6.875					1.000
33-2395	G	12.000	6.750					0.938
33-2425	G	12.000	5.625					1.250
33-2653-2	G	12.000	8.938					1.063
33-2768	G	12.000	7.188					1.125
33-2867	G	12.000	7.375					1.188
33-2950	G	12.000	9.500					1.125
33-2029	G	12.063	7.125					1.125
33-2144	G	12.063	9.188					0.875
33-2190	G	12.063	7.063					1.063
33-2215	G	12.063	3.875					1.125
33-2256	G	12.063	4.625					1.125
33-2462	G	12.063	9.750					1.188
33-2831	G	12.063	7.688					1.250
33-2097	G	12.125	9.000					1.063
33-2145-1	G	12.125	7.250					1.125
33-2184	G	12.125	7.375					1.125
33-2405	G	12.125	6.125					1.000
33-2739	G	12.125	5.813					1.125
33-2512	G	12.156	6.406					1.181
33-2163	G	12.188	6.188					0.875
33-2279	G	12.188	6.875					1.000
33-2426	G	12.188	10.500					1.438
33-2843	G	12.188	6.125					0.938
33-2032	G	12.250	7.125					1.063
33-2064	G	12.250	7.938					1.000
33-2230	G	12.250	6.188					0.875
33-2374	G	12.250	5.250					1.125
33-2431	G	12.250	9.625					1.250
33-2924	G	12.250	7.953					0.875
33-2967	G	12.250	10.063					1.000
33-2099	G	12.313	5.875					1.125
33-2108	G	12.313	7.938					1.188
33-2146	G	12.313	9.188					0.875
33-2160	G	12.313	9.188					0.875
33-2226	G	12.313	6.188					1.125
33-2943	G	12.313	10.750					1.625
33-2798	G	12.323	6.142					0.866
33-2408	G	12.344	9.813					0.813
33-2030	G	12.375	6.313					0.875
33-2052	G	12.375	7.500					1.000
33-2266	G	12.375	6.563					1.000
33-2319	G	12.375	10.875					1.500
33-2465	G	12.375	10.125					1.188
33-2922	G	12.375	5.875					1.000

1) Inner Support Wire 2) Outer Support Wire 3) Closed Top

Filter Dimensions by Size

Panel Filters

Part #	Style	A	B	C	D	E	F	H
33-2965	G	12.375	4.500					1.250
33-2983	G	12.375	10.250					1.625
33-2129	G	12.438	9.813					1.188
33-2764	G	12.438	10.813					1.063
33-2835	G	12.438	6.313					0.875
33-2816	G	12.440	7.559					0.906
33-2884	G	12.480	10.315					1.181
33-2005	G	12.500	7.063					1.313
33-2066-1	G	12.500	6.938					1.063
33-2135	G	12.500	9.875					1.625
33-2321	G	12.500	6.750					0.938
33-2438	G	12.500	9.188					1.750
33-2441	G	12.500	8.125					1.000
33-2749	G	12.500	8.375					1.125
33-2847	G	12.500	4.438					1.125
KA-6009	G	12.500	6.500					0.875
KA-6009R	G	12.500	6.500					0.875
33-2115-1	G	12.563	5.813					1.063
33-2260	G	12.563	7.563					0.938
33-2474	G	12.563	5.250					1.625
33-2177-1	G	12.625	6.813					0.938
33-2197	G	12.625	5.250					1.125
33-2278	G	12.625	6.875					1.000
33-2910	G	12.625	6.000					0.875
33-2945	G	12.625	5.000					1.563
33-2959	G	12.625	10.000					1.750
33-2178	G	12.688	6.125					0.938
33-2539	G	12.688	6.000					1.188
33-2743	G	12.688	3.813					1.125
33-2848	G	12.688	9.750					1.188
33-2656	G	12.719	10.125					0.938
33-2019	G	12.750	6.563					1.563
33-2078	G	12.750	5.750					1.063
33-2176	G	12.750	8.313					1.125
33-2306	G	12.750	9.500					1.063
33-2387	G	12.750	12.000					1.375
33-2594	G	12.795	11.339					1.181
33-2023	G	12.813	5.750					1.188
33-2121-1	G	12.813	7.688					1.000
33-2140-1	G	12.813	7.688					0.875
33-2766	G	12.813	10.438					1.063
33-2449	G	12.875	4.250					2.250
33-2842	G	12.875	6.063					0.938
33-2928	G	12.875	6.000					1.125
33-2939	G	12.875	6.938					1.500
33-2277	G	12.938	5.625					0.938
33-2317	G	12.938	7.625					0.938
33-2683	G	12.938	6.188					1.125
33-2546	G	12.953	8.858					0.875
33-2299	G	13.000	5.625					0.875
33-2347	G	13.000	5.563					0.938
33-2362	G	13.000	6.750					1.000
33-2678	G	13.000	6.000					1.125
33-2844	G	13.000	4.000					1.125
CM-8011	G	13.000	10.500					1.063
33-2043	G	13.063	9.438					1.063
33-2183	G	13.063	7.375					1.125
33-2210	G	13.063	5.563					1.125
33-2747	G	13.063	7.375					1.125
33-2001	G	13.125	5.000					1.563
33-2046	G	13.125	5.250					1.063
33-2466	G	13.125	9.438					2.063
33-2538	G	13.125	6.313					1.188
33-2248	G	13.188	7.250					1.500

Panel Filters

Part #	Style	A	B	C	D	E	F	H
33-2446	G	13.188	6.375					1.000
33-2750	G	13.188	8.063					1.188
33-2763	G	13.188	6.500					1.188
33-2989	G	13.188	9.063					1.250
33-2456	G	13.250	12.438					1.000
TB-9091	G	13.250	4.938					0.438
33-2169	G	13.313	6.688					1.188
33-2382	G	13.313	6.563					1.125
33-2677	G	13.313	3.875					0.875
33-2878	G	13.344	8.844					1.188
33-2782	G	13.346	6.614					1.260
33-2018	G	13.375	6.563					1.563
33-2251	G	13.375	11.125					1.000
33-2599	G	13.375	5.500					1.188
33-2645	G	13.375	9.188					1.063
33-2648	G	13.375	6.875					1.188
33-2084	G	13.438	6.625					1.125
33-2114	G	13.438	6.250					1.125
33-2175	G	13.438	6.625					1.063
33-2865	G	13.438	5.313					1.188
33-2507	G	13.469	5.781					1.313
33-2123	G	13.500	7.125					1.563
33-2384	G	13.500	8.750					1.125
33-2662	G	13.500	6.875					1.188
33-2122	G	13.563	6.688					1.125
33-2530	G	13.594	8.063					0.875
33-2670	G	13.625	7.125					1.500
33-2975	G	13.625	8.000					1.563
HA-7008	G	13.625	8.250					1.438
33-2518	G	13.656	6.813					1.188
33-2181	G	13.688	5.188					1.250
33-2051	G	13.750	4.125					1.063
33-2058	G	13.750	5.125					1.125
33-2152	G	13.750	8.375					1.188
33-2247	G	13.750	9.313					1.563
33-2339	G	13.750	4.813					1.188
33-2626	G	13.781	5.906					1.188
33-2269	G	13.875	8.375					1.188
33-2391	G	13.875	10.313					1.625
33-2406	G	13.875	9.375					1.125
33-2916	G	13.875	4.125					1.125
33-2576	G	13.898	8.189					0.866
33-2577	G	13.937	9.567					1.220
33-2509	G	13.938	3.594					1.188
33-2128	G	14.000	7.188					1.250
33-2394	G	14.000	11.750					1.000
33-2925	G	14.000	3.250					1.125
33-2891	G	14.016	10.354					1.339
33-2631	G	14.031	5.563					1.188
33-2130	G	14.063	6.000					1.125
33-2164	G	14.125	9.313					0.938
33-2765	G	14.173	6.688					1.188
33-2987	G	14.188	8.250					1.688
33-2559	G	14.213	10.118					0.827
33-2936	G	14.250	5.750					0.875
33-2172	G	14.375	5.250					1.063
33-2386	G	14.375	5.125					1.125
33-2697	G	14.375	5.813					1.125
33-2834	G	14.375	6.750					1.250
33-2460	G	14.438	9.125					1.750
33-2154	G	14.500	6.500					0.938
33-2349	G	14.563	9.375					0.813
33-2344	G	14.625	6.250					1.000
33-2502	G	14.646	4.500					1.406

1) Inner Support Wire 2) Outer Support Wire 3) Closed Top

Panel Filters

Part #	Style	A	B	C	D	E	F	H
33-2864	G	14.688	3.250					1.188
33-2508	G	14.719	6.125					1.188
33-2284	G	14.750	8.875					0.938
33-2369	G	14.750	9.500					0.875
33-2432	G	14.750	9.000					1.125
33-2932	G	14.750	5.750					1.625
33-2549	G	14.813	6.625					1.125
33-2264	G	14.875	6.125					1.188
33-2471	G	14.875	5.313					1.125
33-2573	G	14.875	5.813					1.125
33-2730	G	14.875	5.563					0.875
33-2504	G	15.000	4.500					1.188
33-2915	G	15.063	7.000					1.063
33-2574	G	15.079	5.748					1.181
33-2324	G	15.125	7.188					0.938
33-2745	G	15.250	6.375					1.063
33-2857	G	15.250	7.313					1.188
33-2313	G	15.313	7.250					1.000
33-2353	G	15.313	8.188					1.000
33-2570	G	15.344	5.938					0.969
33-2132	G	15.563	5.813					1.125
33-2545	G	15.625	8.719					0.875
33-2004	G	15.750	7.000					1.688
33-2062-1	G	15.938	7.813					1.500
33-2014	G	16.000	7.750					1.063
33-2118	G	16.000	8.000					1.000
33-2322	G	16.000	7.875					1.125
33-2111	G	16.063	8.000					1.125
33-2912	G	16.313	8.875					1.125
33-2011	G	16.500	5.750					0.719
33-2985	G	16.688	7.875					1.000
33-2937	G	16.750	3.750					1.063
33-2522	G	16.781	5.438					0.719
33-2331	G	16.813	5.000					1.188
33-2514	G	17.156	6.063					1.188
33-2710	G	17.519	5.118					1.181
33-2035	G	17.563	10.625					1.063
33-2635	G	17.781	5.281					1.188
33-2722	G	18.188	7.375					1.125
33-2193	G	18.250	3.250					1.125
33-2642	G	18.500	6.688					1.188
33-2640	G	18.813	5.688					1.188
38-0739 [1]	G	19.625	19.625					1.313
33-2591	G	20.250	6.188					0.938
33-2807	G	20.344	4.531					0.969
33-2189	G	20.500	6.938					1.063
33-2244	G	20.563	3.313					1.125
33-2706	G	22.313	6.375					1.000
38-0737 [1]	G	24.000	19.625					1.313

Round Panel Filters

E-9209	I	9.469						1.375
E-9199	I	10.000						1.500
E-9106 [3]	I	10.125						1.563
E-9107	I	10.125						1.469
E-9191	I	10.500						1.500
E-9194	I	11.500						1.370

1) Inner Support Wire 2) Outer Support Wire 3) Closed Top

Vehicle	Engine Type	Intake Kit	Estimated Horsepower*
2012 ACURA			
TSX	2.4L L4 F/I	69-0026TS [2]	7.9 @ 5400
2011 ACURA			
RDX	2.3L L4 F/I	69-0017TS [2]	8.8 @ 5047
TSX	2.4L L4 F/I	69-0026TS [2]	7.9 @ 5400
2010 ACURA			
RDX	2.3L L4 F/I	69-0017TS [2]	8.8 @ 5047
TL	3.5L V6 F/I - w/mass air	69-1210TS [2]	10.2 @ 5217
TL	3.7L V6 F/I - w/mass air	69-1210TS [2]	10.2 @ 5217
TSX	2.4L L4 F/I	69-0026TS [2]	7.9 @ 5400
2009 ACURA			
RDX	2.3L L4 F/I	69-0017TS [2]	8.8 @ 5047
TL	3.5L V6 F/I - w/mass air	69-1210TS [2]	10.2 @ 5217
TSX	2.4L L4 F/I	69-0026TS [2]	7.9 @ 5400
2008 ACURA			
RDX	2.3L L4 F/I	69-0017TS [1]	8.8 @ 5047
TL	3.2L V6 F/I	69-0021TS [1]	6.8 @ 5501
		69-0021TB [1]	6.8 @ 5501
TL	3.5L V6 F/I - w/mass air	69-1210TS [2]	10.2 @ 5217
TSX	2.4L L4 F/I	69-0025TP [1]	4.2 @ 5300
2007 ACURA			
RDX	2.3L L4 F/I	69-0017TS [1]	8.8 @ 5047
TL	3.2L V6 F/I	69-0021TS [1]	6.8 @ 5501
		69-0021TB [1]	6.8 @ 5501
TL	3.5L V6 F/I - w/mass air	69-1210TS [2]	10.2 @ 5217
TSX	2.4L L4 F/I	69-0025TP [1]	4.2 @ 5300
2006 ACURA			
RSX	2.0L L4 F/I	69-0015TS [2]	2.8 @ 6500
		69-0015TR [2]	2.8 @ 6500
RSX Type-S	2.0L L4 F/I	69-1009TR [2]	10.5 @ 7014
		69-1009TWR [2]	10.5 @ 7014
		69-1009TP [2]	10.5 @ 7014
TL	3.2L V6 F/I	69-0021TS [1]	6.8 @ 5501
		69-0021TB [1]	6.8 @ 5501
TSX	2.4L L4 F/I	69-0025TP [1]	4.2 @ 5300
2005 ACURA			
EL	1.7L L4 F/I	69-1008TB [2]	5.0 @ 5200
		69-1008TS [2]	5.0 @ 5200
RSX	2.0L L4 F/I	69-0015TR [1]	2.8 @ 6500
		69-0015TS [1]	2.8 @ 6500
RSX Type-S	2.0L L4 F/I	69-1009TP [2]	10.5 @ 7014
		69-1009TWR [2]	10.5 @ 7014
		69-1009TR [2]	10.5 @ 7014
TL	3.2L V6 F/I	69-0021TB [1]	6.8 @ 5501
		69-0021TS [1]	6.8 @ 5501
TSX	2.4L L4 F/I	69-0025TP [1]	4.2 @ 5300
2004 ACURA			
EL	1.7L L4 F/I	69-1008TB [2]	5.0 @ 5200
		69-1008TS [2]	5.0 @ 5200
RSX	2.0L L4 F/I	69-0015TS [1]	2.8 @ 6500
		69-0015TR [1]	2.8 @ 6500
RSX Type-S	2.0L L4 F/I	69-1009TWR [1]	10.5 @ 7014
		69-1009TP [1]	10.5 @ 7014
		69-1009TR [1]	10.5 @ 7014
2004 ACURA			
TL	3.2L V6 F/I	69-0021TB [1]	6.8 @ 5501
		69-0021TS [1]	6.8 @ 5501
TSX	2.4L L4 F/I	69-0025TP [1]	4.2 @ 5300
2003 ACURA			
EL	1.7L L4 F/I	69-1008TS [2]	5.0 @ 5200
		69-1008TB [2]	5.0 @ 5200
RSX	2.0L L4 F/I	69-0015TS [1]	2.8 @ 6500
		69-0015TR [1]	2.8 @ 6500
RSX Type-S	2.0L L4 F/I	69-1009TR [1]	10.5 @ 7014
		69-1009TP [1]	10.5 @ 7014
		69-1009TWR [1]	10.5 @ 7014
2002 ACURA			
EL	1.7L L4 F/I	69-1008TS [2]	5.0 @ 5200
		69-1008TB [2]	5.0 @ 5200
RSX	2.0L L4 F/I	69-0015TR [1]	2.8 @ 6500
		69-0015TS [1]	2.8 @ 6500
RSX Type-S	2.0L L4 F/I	69-1009TWR [1]	10.5 @ 7014
		69-1009TP [1]	10.5 @ 7014
		69-1009TR [1]	10.5 @ 7014
2001 ACURA			
EL	1.7L L4 F/I	69-1008TB [2]	5.0 @ 5200
		69-1008TS [2]	5.0 @ 5200
Integra GS-R	1.8L L4 F/I	57-3509 [1]	5.5 @ 7200
2000 ACURA			
Integra GS-R	1.8L L4 F/I	57-3509 [1]	5.5 @ 7200
1999 ACURA			
Integra GS-R	1.8L L4 F/I	57-3509 [1]	5.5 @ 7200
1998 ACURA			
Integra GS-R	1.8L L4 F/I	57-3509 [1]	5.5 @ 7200
1997 ACURA			
Integra GS-R	1.8L L4 F/I	57-3509 [1]	5.5 @ 7200
1996 ACURA			
Integra GS-R	1.8L L4 F/I	57-3509 [1]	5.5 @ 7200
1995 ACURA			
Integra	1.8L L4 F/I	57-3506 [1]	6.1 @ 6300
Integra GS-R	1.8L L4 F/I	57-3509 [1]	5.5 @ 7200
1994 ACURA			
Integra	1.8L L4 F/I	57-3506 [1]	6.1 @ 6300
Integra GS-R	1.8L L4 F/I	57-3509 [1]	5.5 @ 7200
NSX	3.0L V6 F/I	57-3502 [1]	
1993 ACURA			
Integra	1.8L L4 F/I	57-3501 [1]	
Integra GS-R	1.7L L4 F/I	57-3501 [1]	
NSX	3.0L V6 F/I	57-3502 [1]	
1992 ACURA			
Integra	1.8L L4 F/I	57-3501 [1]	
Integra GS-R	1.7L L4 F/I	57-3501 [1]	
NSX	3.0L V6 F/I	57-3502 [1]	
1991 ACURA			
Integra	1.8L L4 F/I	57-3501 [1]	
NSX	3.0L V6 F/I	57-3502 [1]	
1990 ACURA			
Integra	1.8L L4 F/I	57-3501 [1]	

1) Street legal in all US states. 2) Street legal in most states, but not legal for use in California or other states with similar emission control regulations.
* Estimated horsepower gains are based on specific or similar vehicle dyno tests. Results will vary. See Page 479 for more information.
Partial Listing - Complete List of Vehicles and Applications at knfilters.com. See page 5 for information on intake tube materials/colors.

Vehicle	Engine Type	Intake Kit	Estimated Horsepower*
1989 ACURA			
Integra	1.6L L4 F/I	57-3500 [1]	
1987 ACURA			
Integra	1.6L L4 F/I	57-3500 [1]	
2012 AUDI			
A3	2.0L L4 DSL	69-9756TFK [2]	
A3	2.0L L4 F/I	69-9756TFK [2]	
A3	2.0L L4 F/I - US	69-9504TTK [2]	9.2 @ 4853
A4	2.0L L4 F/I - Exc., Right Hand Drive	69-9505T [2]	13.6 @ 4500
2011 AUDI			
A3	2.0L L4 DSL	69-9756TFK [2]	
A3	2.0L L4 F/I - 211BHP	69-9756TFK [2]	
A3	2.0L L4 F/I - US	69-9504TTK [2]	9.2 @ 4853
A4	2.0L L4 F/I - Exc., Right Hand Drive	69-9505T [2]	13.6 @ 4500
2010 AUDI			
A3	2.0L L4 DSL	69-9756TFK [2]	
A3	2.0L L4 F/I - Non-US	69-9756TFK [2]	
A3	2.0L L4 F/I - US	69-9504TTK [2]	9.2 @ 4853
A4	2.0L L4 F/I - Exc., Right Hand Drive	69-9505T [2]	18.1 @ 4435
A4 Cabriolet	2.0L L4 F/I - Exc., Right Hand Drive	69-9505T [2]	13.6 @ 4500
2009 AUDI			
A3	2.0L L4 DSL	69-9756TFK [2]	
A3	2.0L L4 F/I - Non-US	69-9756TFK [2]	
A3	2.0L L4 F/I - US	69-9504TTK [2]	9.2 @ 4853
A4	2.0L L4 F/I - Exc., Right Hand Drive	69-9505T [2]	13.6 @ 4500
A4 Cabriolet	2.0L L4 F/I - Exc., Right Hand Drive	69-9505T [2]	13.6 @ 4500
A4 Quattro	2.0L L4 F/I - Exc., Right Hand Drive	69-9505T [2]	13.6 @ 4500
A4 Quattro Cabriolet	2.0L L4 F/I - Exc., Right Hand Drive	69-9505T [2]	13.6 @ 4500
TT	2.0L L4 DSL	69-9756TFK [2]	
2008 AUDI			
A3	2.0L L4 DSL	69-9756TFK [2]	
A3	2.0L L4 F/I - Turbo, 200BHP	69-9503TFK [2]	18.6 @ 4500
A3	2.0L L4 F/I - US	69-9504TTK [2]	9.2 @ 4853
TT	2.0L L4 DSL	69-9756TFK [2]	
2007 AUDI			
A3	2.0L L4 DSL	69-9756TFK [2]	
A3	2.0L L4 F/I - Turbo, 200BHP	69-9503TFK [2]	18.6 @ 4500
2006 AUDI			
A3	2.0L L4 DSL	69-9756TFK [2]	
A3	2.0L L4 F/I - Turbo	69-9503TFK [1]	18.6 @ 4500
A3	2.0L L4 F/I - Turbo, 200BHP	69-9503TFK [2]	18.6 @ 4500
2002 AUDI			
A3	1.8L L4 F/I - 150/180BHP, w/aux. air Pump	69-9501TP [2]	10.0 @ 5079
2008 BMW			
M5	5.0L V10 F/I - Non-US	69-2003TFK [2]	20.8 @ 5700
M6	5.0L V10 F/I - Non-US	69-2003TFK [2]	20.8 @ 5700
2007 BMW			
M5	5.0L V10 F/I	69-2003TFK [2]	20.8 @ 5700
M6	5.0L V10 F/I - Non-US	69-2003TFK [2]	20.8 @ 5700
2006 BMW			
M5	5.0L V10 F/I	69-2003TFK [2]	20.8 @ 5700
M6	5.0L V10 F/I - Non-US	69-2003TFK [2]	20.8 @ 5700
2005 BMW			
325Ci	2.5L L6 F/I - US	57-1002 [1]	9.7 @ 6090
325i	2.5L L6 F/I - US	57-1002 [1]	9.7 @ 6090
325Xi	2.5L L6 F/I - US	57-1002 [1]	9.7 @ 6090
330Ci	3.0L L6 F/I - US	57-1001 [1]	11.5 @ 6030
330i	3.0L L6 F/I - US	57-1001 [1]	11.5 @ 6030
330Xi	3.0L L6 F/I - US	57-1001 [1]	11.5 @ 6030
M3	3.2L L6 F/I	57-1003 [1]	17.8 @ 7400
M3	3.2L L6 F/I - US	69-2001TS [1]	9.1 @ 6000
		69-2001TWK [1]	9.1 @ 6000
M5	5.0L V10 F/I	69-2003TFK [2]	20.8 @ 5700
M6	5.0L V10 F/I	69-2003TFK [2]	20.8 @ 5700
2004 BMW			
325Ci	2.5L L6 F/I - US	57-1002 [1]	9.7 @ 6090
325i	2.5L L6 F/I - US	57-1002 [1]	9.7 @ 6090
325Xi	2.5L L6 F/I - US	57-1002 [1]	9.7 @ 6090
330Ci	3.0L L6 F/I - US	57-1001 [1]	11.5 @ 6030
330i	3.0L L6 F/I - US	57-1001 [1]	11.5 @ 6030
330Xi	3.0L L6 F/I - US	57-1001 [1]	11.5 @ 6030
M3	3.2L L6 F/I	57-1003 [1]	17.8 @ 7400
M3	3.2L L6 F/I - US	69-2001TS [1]	9.1 @ 6000
		69-2001TWK [1]	9.1 @ 6000
2003 BMW			
325Ci	2.5L L6 F/I - US	57-1002 [1]	9.7 @ 6090
325i	2.5L L6 F/I - US	57-1002 [1]	9.7 @ 6090
325Xi	2.5L L6 F/I - US	57-1002 [1]	9.7 @ 6090
330Ci	3.0L L6 F/I - US	57-1001 [1]	11.5 @ 6030
330i	3.0L L6 F/I - US	57-1001 [1]	11.5 @ 6030
330Xi	3.0L L6 F/I - US	57-1001 [1]	11.5 @ 6030
M3	3.2L L6 F/I	57-1003 [1]	17.8 @ 7400
M3	3.2L L6 F/I - US	69-2001TWK [1]	9.1 @ 6000
		69-2001TS [1]	9.1 @ 6000
2002 BMW			
325Ci	2.5L L6 F/I - US	57-1002 [1]	9.7 @ 6090
325i	2.5L L6 F/I - US	57-1002 [1]	9.7 @ 6090
325Xi	2.5L L6 F/I - US	57-1002 [1]	9.7 @ 6090
330Ci	3.0L L6 F/I - US	57-1001 [1]	11.5 @ 6030
330i	3.0L L6 F/I - US	57-1001 [1]	11.5 @ 6030
330Xi	3.0L L6 F/I - US	57-1001 [1]	11.5 @ 6030
M3	3.2L L6 F/I	57-1003 [1]	17.8 @ 7400
M3	3.2L L6 F/I - US	69-2001TS [1]	9.1 @ 6000
		69-2001TWK [1]	9.1 @ 6000
2001 BMW			
325Ci	2.5L L6 F/I - US	57-1002 [1]	9.7 @ 6090
325i	2.5L L6 F/I - US	57-1002 [1]	9.7 @ 6090
330Ci	3.0L L6 F/I - US	57-1001 [1]	11.5 @ 6030
330i	3.0L L6 F/I - US	57-1001 [1]	11.5 @ 6030
M3	3.2L L6 F/I	57-1003 [1]	17.8 @ 7400
M3	3.2L L6 F/I - US	69-2001TS [1]	9.1 @ 6000
		69-2001TWK [1]	9.1 @ 6000
2000 BMW			
323Ci	2.5L L6 F/I - US	57-1002 [1]	9.7 @ 6090

1) Street legal in all US states. 2) Street legal in most states, but not legal for use in California or other states with similar emission control regulations.
* Estimated horsepower gains are based on specific or similar vehicle dyno tests. Results will vary. See Page 479 for more information.
Partial Listing - Complete List of Vehicles and Applications at knfilters.com. See page 5 for information on intake tube materials/colors.

AIR INTAKE SYSTEMS

Vehicle	Engine Type	Intake Kit	Estimated Horsepower*
2000 BMW			
323i	2.5L L6 F/I - US	57-1002 [1]	9.7 @ 6090
328Ci	2.8L L6 F/I - US	57-1002 [1]	9.7 @ 6090
328i	2.8L L6 F/I - US	57-1002 [1]	9.7 @ 6090
1999 BMW			
323i	2.5L L6 F/I - E46	57-1002 [1]	9.7 @ 6090
323iC	2.5L L6 F/I - US	57-1002 [1]	9.7 @ 6090
323iC	2.5L L6 F/I - US, E36	57-1000 [1]	8.7 @ 6300
323iS	2.5L L6 F/I - US, E36	57-1000 [1]	8.7 @ 6300
328i	2.8L L6 F/I - US, E36	57-1000 [1]	8.7 @ 6300
328i	2.8L L6 F/I - US, E46	57-1002 [1]	9.7 @ 6090
328ic	2.8L L6 F/I - US, E36	57-1000 [1]	8.7 @ 6300
328iS	2.8L L6 F/I - US	57-1000 [1]	8.7 @ 6300
M3	3.2L L6 F/I - US	57-1000 [1]	8.7 @ 6300
1998 BMW			
323iC	2.5L L6 F/I - US, E36	57-1000 [1]	8.7 @ 6300
323iS	2.5L L6 F/I - US, E36	57-1000 [1]	8.7 @ 6300
328i	2.8L L6 F/I - US	57-1000 [1]	8.7 @ 6300
328ic	2.8L L6 F/I - US	57-1000 [1]	8.7 @ 6300
328iS	2.8L L6 F/I - US, E36	57-1000 [1]	8.7 @ 6300
M3	3.2L L6 F/I - US	57-1000 [1]	8.7 @ 6300
1997 BMW			
328Ci	2.8L L6 F/I - US, E36	57-1000 [1]	8.7 @ 6300
328i	2.8L L6 F/I - US	57-1000 [1]	8.7 @ 6300
328iS	2.8L L6 F/I - US, E36	57-1000 [1]	8.7 @ 6300
M3	3.2L L6 F/I - US	57-1000 [1]	8.7 @ 6300
1996 BMW			
328i	2.8L L6 F/I - US	57-1000 [1]	8.7 @ 6300
328iS	2.8L L6 F/I - US, E36	57-1000 [1]	8.7 @ 6300
M3	3.2L L6 F/I - US	57-1000 [1]	8.7 @ 6300
1995 BMW			
325Ci	2.5L L6 F/I - US, E36	57-1000 [1]	8.7 @ 6300
325i	2.5L L6 F/I - US	57-1000 [1]	8.7 @ 6300
325iS	2.5L L6 F/I - US, E36	57-1000 [1]	8.7 @ 6300
M3	3.0L L6 F/I - US	57-1000 [1]	8.7 @ 6300
1994 BMW			
325Ci	2.5L L6 F/I - US, E36	57-1000 [1]	8.7 @ 6300
325i	2.5L L6 F/I - US	57-1000 [1]	8.7 @ 6300
325iS	2.5L L6 F/I - US, E36	57-1000 [1]	8.7 @ 6300
1993 BMW			
325i	2.5L L6 F/I - US	57-1000 [1]	8.7 @ 6300
325iS	2.5L L6 F/I - US	57-1000 [1]	8.7 @ 6300
1992 BMW			
325i	2.5L L6 F/I - US	57-1000 [1]	8.7 @ 6300
325iS	2.5L L6 F/I - US, E36	57-1000 [1]	8.7 @ 6300
2013 CADILLAC			
Escalade	6.2L V8 F/I	77-3070KP [2]	9.9 @ 5342
		63-3070 [2]	10.3 @ 5342
2012 CADILLAC			
Escalade	6.2L V8 F/I	77-3070KP [2]	9.9 @ 5342
		63-3070 [2]	10.3 @ 5342
2011 CADILLAC			
Escalade	6.2L V8 F/I	63-3070 [2]	10.3 @ 5342
		77-3070KP [2]	9.9 @ 5342

Vehicle	Engine Type	Intake Kit	Estimated Horsepower*
2010 CADILLAC			
Escalade	6.2L V8 F/I	63-3070 [2]	10.3 @ 5342
		77-3070KP [2]	9.9 @ 5342
2009 CADILLAC			
Escalade	6.2L V8 F/I	77-3070KP [2]	9.9 @ 5342
		63-3070 [2]	10.3 @ 5342
2008 CADILLAC			
Escalade	6.2L V8 F/I	77-3058KP [1]	12.5 @ 4917
		57-3058 [1]	17.6 @ 4917
2007 CADILLAC			
CTS-V	6.0L V8 F/I	63-3068 [2]	17.1 @ 5117
Escalade	6.2L V8 F/I	77-3058KP [1]	12.5 @ 4917
		57-3058 [1]	17.6 @ 4917
2006 CADILLAC			
CTS	2.8L V6 F/I	57-3042 [1]	14.2 @ 6283
CTS	3.6L V6 F/I	57-3042 [1]	14.2 @ 6283
CTS-V	6.0L V8 F/I	63-3068 [2]	17.1 @ 5117
Escalade	6.0L V8 F/I	77-3050KP [1]	8.4 @ 5336
		57-3050 [1]	11.9 @ 5367
2005 CADILLAC			
CTS	2.8L V6 F/I	57-3042 [1]	14.2 @ 6283
CTS	3.6L V6 F/I	57-3042 [1]	14.2 @ 6283
CTS-V	5.7L V8 F/I	57-3054 [1]	19.1 @ 5100
Escalade	5.3L V8 F/I	57-3050 [1]	11.9 @ 5367
		77-3050KP [1]	8.4 @ 5336
Escalade	6.0L V8 F/I	77-3050KP [1]	8.4 @ 5336
		57-3050 [1]	11.9 @ 5367
2004 CADILLAC			
CTS	3.2L V6 F/I	57-3040 [1]	12.9 @ 6048
CTS	3.6L V6 F/I	57-3042 [1]	14.2 @ 6283
CTS-V	5.7L V8 F/I	57-3054 [1]	19.1 @ 5100
Escalade	5.3L V8 F/I	77-3023KP [1]	8.2 @ 5067
		57-3023-1 [1]	14.3 @ 5018
Escalade	6.0L V8 F/I	77-3023KP [1]	8.2 @ 5067
		57-3023-1 [1]	14.3 @ 5018
2003 CADILLAC			
CTS	3.2L V6 F/I	57-3040 [1]	12.9 @ 6048
Escalade	5.3L V8 F/I	77-3023KP [1]	8.2 @ 5067
		57-3023-1 [1]	14.3 @ 5018
Escalade	6.0L V8 F/I	77-3023KP [1]	14.1 @ 4897
		57-3023-1 [1]	14.3 @ 5018
2002 CADILLAC			
Escalade	5.3L V8 F/I	57-3023-1 [1]	14.3 @ 5018
		77-3023KP [1]	8.2 @ 5067
Escalade	6.0L V8 F/I	77-3023KP [1]	8.2 @ 5067
		57-3023-1 [1]	14.3 @ 5018
2013 CHEVROLET			
Avalanche	5.3L V8 F/I	77-3070KP [2]	9.9 @ 5342
		63-3070 [2]	10.3 @ 5342
Camaro	3.6L V6 F/I	63-3078 [2]	11.5 @ 5800
		69-4523TP [2]	15.6 @ 5800
Camaro	6.2L V8 F/I	69-4519TP [2]	18.1 @ 5200
		63-3074 [2]	18.6 @ 5161
Camaro ZL1	6.2L V8 F/I	63-3079 [2]	
Corvette	6.2L V8 F/I	63-3073 [2]	17.7 @ 4750
Corvette ZR-1	6.2L V8 F/I	63-3080 [2]	27.2 @ 5948

1) Street legal in all US states. 2) Street legal in most states, but not legal for use in California or other states with similar emission control regulations.
* Estimated horsepower gains are based on specific or similar vehicle dyno tests. Results will vary. See Page 479 for more information.
Partial Listing - Complete List of Vehicles and Applications at knfilters.com. See page 5 for information on intake tube materials/colors.

Vehicle	Engine Type	Intake Kit	Estimated Horsepower*
2013 CHEVROLET			
Cruze	1.4L L4 F/I	69-4521TS [2]	6.5 @ 5000
Equinox	2.4L L4 F/I	77-3071KS [2]	9.3 @ 4600
Silverado 1500	4.8L V8 F/I	77-3070KP [2]	9.9 @ 5342
		63-3070 [2]	10.3 @ 5342
Silverado 1500	5.3L V8 F/I	63-3070 [2]	10.3 @ 5342
		77-3070KP [2]	9.9 @ 5342
Silverado 1500	6.2L V8 F/I	77-3070KP [2]	9.9 @ 5342
		63-3070 [2]	10.3 @ 5342
Suburban 1500	5.3L V8 F/I	63-3070 [2]	10.3 @ 5342
		77-3070KP [2]	9.9 @ 5342
Tahoe	5.3L V8 F/I	63-3070 [2]	10.3 @ 5342
		77-3070KP [2]	9.9 @ 5342
2012 CHEVROLET			
Avalanche	5.3L V8 F/I	77-3070KP [2]	9.9 @ 5342
		63-3070 [2]	10.3 @ 5342
Camaro	3.6L V6 F/I	69-4523TP [2]	15.6 @ 5800
		63-3078 [2]	13.1 @ 5800
Camaro	6.2L V8 F/I	69-4519TP [2]	18.1 @ 5200
		63-3074 [2]	18.6 @ 5161
Camaro ZL1	6.2L V8 F/I	63-3079 [2]	
Colorado	2.9L L4 F/I	63-3064-1 [2]	9.0 @ 4862
Colorado	3.7L L5 F/I	77-3065KP [2]	7.2 @ 4533
		63-3065 [2]	11.0 @ 4754
Corvette	6.2L V8 F/I	63-3073 [2]	17.7 @ 4750
Corvette ZR-1	6.2L V8 F/I	63-3080 [2]	27.2 @ 5948
Cruze	1.4L L4 F/I	69-4521TS [2]	6.5 @ 5000
Cruze	1.8L L4 F/I - US	69-4522TS [2]	5.7 @ 5940
Equinox	2.4L L4 F/I	77-3071KS [2]	9.3 @ 4600
Silverado 1500	4.8L V8 F/I	63-3070 [2]	10.3 @ 5342
		77-3070KP [2]	9.9 @ 5342
Silverado 1500	5.3L V8 F/I	77-3070KP [2]	9.9 @ 5342
		63-3070 [2]	10.3 @ 5342
Silverado 1500	6.2L V8 F/I	77-3070KP [2]	9.9 @ 5342
		63-3070 [2]	10.3 @ 5342
Silverado 2500 HD	6.0L V8 F/I	77-3076KTK [2]	10.2 @ 5033
Silverado 2500 HD	6.6L V8 DSL	63-3077 [2]	19.3 @ 2420
Silverado 3500 HD	6.0L V8 F/I	77-3076KTK [2]	10.2 @ 5033
Silverado 3500 HD	6.6L V8 DSL	63-3077 [2]	19.3 @ 2420
Suburban 1500	5.3L V8 F/I	77-3070KP [2]	9.9 @ 5342
		63-3070 [2]	10.3 @ 5342
Tahoe	5.3L V8 F/I	63-3070 [2]	10.3 @ 5342
		77-3070KP [2]	9.9 @ 5342
2011 CHEVROLET			
Avalanche	5.3L V8 F/I	63-3070 [2]	10.3 @ 5342
		77-3070KP [2]	9.9 @ 5342
Camaro	3.6L V6 F/I	69-4520TP [2]	13.5 @ 6200
		63-3078 [2]	11.5 @ 5800
Camaro	6.2L V8 F/I	69-4519TP [2]	18.1 @ 5200
		63-3074 [2]	18.6 @ 5161
Colorado	2.9L L4 F/I	63-3064-1 [2]	9.0 @ 4862
Colorado	3.7L L5 F/I	77-3065KP [2]	7.2 @ 4533
		63-3065 [2]	11.0 @ 4754
Corvette	6.2L V8 F/I	63-3073 [2]	17.7 @ 4750
Corvette ZR-1	6.2L V8 F/I	63-3080 [2]	27.2 @ 5948
Cruze	1.4L L4 F/I	69-4521TS [2]	6.5 @ 5000
Cruze	1.8L L4 F/I - US	69-4522TS [2]	5.7 @ 5940
Equinox	2.4L L4 F/I	77-3071KS [2]	9.3 @ 4600
HHR	2.2L L4 F/I	63-3056 [2]	9.3 @ 5325
HHR	2.4L L4 F/I	63-3056 [2]	9.3 @ 5325
Silverado 1500	4.8L V8 F/I	63-3070 [2]	10.3 @ 5342
		77-3070KP [2]	9.9 @ 5342
Silverado 1500	5.3L V8 F/I	63-3070 [2]	10.3 @ 5342
		77-3070KP [2]	9.9 @ 5342
Silverado 1500	6.2L V8 F/I	77-3070KP [2]	9.9 @ 5342
		63-3070 [2]	10.3 @ 5342
Silverado 2500 HD	6.0L V8 F/I	77-3076KTK [2]	10.2 @ 5033
Silverado 2500 HD	6.6L V8 DSL	63-3077 [2]	19.3 @ 2420
Silverado 3500 HD	6.0L V8 F/I	77-3076KTK [2]	10.2 @ 5033
Silverado 3500 HD	6.6L V8 DSL	63-3077 [2]	19.3 @ 2420
Suburban 1500	5.3L V8 F/I	77-3070KP [2]	9.9 @ 5342
		63-3070 [2]	10.3 @ 5342
Tahoe	5.3L V8 F/I	77-3070KP [2]	9.9 @ 5342
		63-3070 [2]	10.3 @ 5342
2010 CHEVROLET			
Avalanche	5.3L V8 F/I	77-3070KP [2]	9.9 @ 5342
		63-3070 [2]	10.3 @ 5342
Camaro	3.6L V6 F/I	63-3075 [2]	15.0 @ 6200
		69-4520TP [2]	13.5 @ 6200
Camaro	6.2L V8 F/I	69-4519TP [2]	18.1 @ 5200
		63-3074 [2]	18.6 @ 5161
Cobalt	2.0L L4 F/I	69-4518TTK [2]	12.2 @ 4600
Cobalt	2.2L L4 F/I	69-4515TS [2]	6.6 @ 4800
Colorado	2.9L L4 F/I	63-3064-1 [2]	9.0 @ 4862
Colorado	3.7L L5 F/I	77-3065KP [2]	7.2 @ 4533
		63-3065 [2]	11.0 @ 4754
Corvette	6.2L V8 F/I	63-3073 [2]	17.7 @ 4750
Corvette ZR-1	6.2L V8 F/I	63-3080 [2]	27.2 @ 5948
Equinox	2.4L L4 F/I	77-3071KS [2]	9.3 @ 4600
HHR	2.0L L4 F/I	63-3069 [2]	9.4 @ 5068
HHR	2.2L L4 F/I	57-3056 [1]	9.3 @ 5325
		63-3056 [2]	9.3 @ 5325
HHR	2.4L L4 F/I	63-3056 [2]	9.3 @ 5325
		57-3056 [1]	9.3 @ 5325
Silverado 1500	4.8L V8 F/I	63-3070 [2]	10.3 @ 5342
		77-3070KP [2]	9.9 @ 5342
Silverado 1500	5.3L V8 F/I	63-3070 [2]	10.3 @ 5342
		77-3070KP [2]	9.9 @ 5342
Silverado 1500	6.2L V8 F/I	77-3070KP [2]	9.9 @ 5342
		63-3070 [2]	10.3 @ 5342
Silverado 2500 HD	6.0L V8 F/I	63-3076 [2]	
Silverado 2500 HD	6.6L V8 DSL	57-3066 [1]	19.7 @ 2900
Silverado 3500 HD	6.6L V8 DSL	57-3066 [1]	19.7 @ 2900
Suburban 1500	5.3L V8 F/I	77-3070KP [2]	9.9 @ 5342
		63-3070 [2]	10.3 @ 5342
Tahoe	5.3L V8 F/I	77-3070KP [2]	9.7 @ 5342
		63-3070 [2]	10.3 @ 5342
2009 CHEVROLET			
Avalanche	5.3L V8 F/I	63-3070 [2]	10.3 @ 5342
		77-3070KP [2]	9.9 @ 5342
Avalanche	6.0L V8 F/I	63-3070 [2]	10.3 @ 5342
		77-3070KP [2]	9.9 @ 5342
Cheyenne 2500	5.3L V8 F/I	77-3058KP [2]	12.5 @ 4917
Cobalt	2.0L L4 F/I	69-4518TTK [2]	12.4 @ 4600
Cobalt	2.2L L4 F/I	69-4515TS [2]	6.6 @ 4800
Colorado	2.9L L4 F/I	63-3064-1 [2]	9.0 @ 4862
Colorado	3.7L L5 F/I	63-3065 [2]	11.0 @ 4754

1) Street legal in all US states. 2) Street legal in most states, but not legal for use in California or other states with similar emission control regulations.
* Estimated horsepower gains are based on specific or similar vehicle dyno tests. Results will vary. See Page 479 for more information.
Partial Listing - Complete List of Vehicles and Applications at knfilters.com. See page 5 for information on intake tube materials/colors.

Vehicle	Engine Type	Intake Kit	Estimated Horsepower*
2009 CHEVROLET			
Colorado	3.7L L5 F/I	77-3065KP [2]	7.2 @ 4533
Corvette	6.2L V8 F/I	63-3073 [2]	17.7 @ 4750
Corvette Z06	7.0L V8 F/I	63-3060-1 [2]	27.2 @ 5600
Corvette ZR-1	6.2L V8 F/I	63-3080 [2]	27.2 @ 5948
HHR	2.0L L4 F/I	63-3069 [2]	9.4 @ 5068
HHR	2.4L L4 F/I	57-3056 [1]	9.3 @ 5325
		63-3056 [2]	9.3 @ 5325
Impala	5.3L V8 F/I	63-3059 [2]	13.5 @ 5222
Silverado 1500	4.8L V8 F/I	77-3070KP [2]	9.9 @ 5342
		63-3070 [2]	10.3 @ 5342
Silverado 1500	5.3L V8 F/I	63-3070 [2]	10.3 @ 5342
		77-3070KP [2]	9.9 @ 5342
Silverado 1500	6.0L V8 F/I	63-3070 [2]	10.3 @ 5342
		77-3070KP [2]	9.9 @ 5342
Silverado 1500	6.2L V8 F/I	63-3070 [2]	16.6 @ 5342
		77-3070KP [2]	10.8 @ 5342
Silverado 2500 HD	6.0L V8 F/I	63-3076 [2]	
Silverado 2500 HD	6.6L V8 DSL	57-3066 [1]	19.7 @ 2900
Silverado 3500 HD	6.0L V8 F/I	63-3076 [2]	
Silverado 3500 HD	6.6L V8 DSL	57-3066 [1]	19.7 @ 2900
Suburban 1500	5.3L V8 F/I	77-3070KP [2]	9.9 @ 5342
		63-3070 [2]	10.3 @ 5342
Suburban 1500	6.0L V8 F/I	63-3070 [2]	10.3 @ 5342
		77-3070KP [2]	9.9 @ 5342
Tahoe	4.8L V8 F/I	63-3070 [2]	10.3 @ 5342
		77-3070KP [2]	9.9 @ 5342
Tahoe	5.3L V8 F/I	77-3070KP [2]	9.9 @ 5342
		63-3070 [2]	10.3 @ 5342
Tahoe	6.2L V8 F/I	63-3070 [2]	10.3 @ 5342
		77-3070KP [2]	9.9 @ 5342
TrailBlazer	4.2L L6 F/I	63-3062 [2]	9.5 @ 4725
		77-3062KP [2]	9.3 @ 4850
2008 CHEVROLET			
Avalanche	5.3L V8 F/I	57-3058 [1]	17.6 @ 4917
		77-3058KP [1]	12.5 @ 4917
Avalanche	6.0L V8 F/I	57-3058 [1]	17.6 @ 4917
		77-3058KP [1]	12.5 @ 4917
Cheyenne 2500	5.3L V8 F/I	77-3058KP [2]	12.5 @ 4917
Cobalt	2.0L L4 F/I	69-4518TTK [2]	12.2 @ 4600
Cobalt	2.2L L4 F/I	69-4515TS [2]	6.6 @ 4800
Cobalt	2.4L L4 F/I	69-4517TTK [2]	15.9 @ 5900
Colorado	2.9L L4 F/I	63-3064-1 [2]	9.0 @ 4862
Colorado	3.7L L5 F/I	77-3065KP [2]	7.2 @ 4533
		63-3065 [2]	11.0 @ 4754
Corvette	6.2L V8 F/I	63-3073 [2]	17.7 @ 4750
Corvette Z06	7.0L V8 F/I	63-3060-1 [2]	27.2 @ 5600
HHR	2.0L L4 F/I	63-3069 [2]	9.4 @ 5068
HHR	2.4L L4 F/I	57-3056 [1]	9.3 @ 5325
		63-3056 [2]	9.3 @ 5325
Impala	5.3L V8 F/I	63-3059 [2]	13.5 @ 5222
Silverado 1500	4.8L V8 F/I	57-3058 [1]	17.6 @ 4917
		77-3058KP [1]	12.5 @ 4917
Silverado 1500	5.3L V8 F/I	57-3058 [1]	17.6 @ 4917
		77-3058KP [1]	12.5 @ 4917
Silverado 1500	6.0L V8 F/I	77-3058KP [1]	12.5 @ 4917
		57-3058 [1]	17.6 @ 4917
Silverado 2500 HD	6.0L V8 F/I	57-3067 [1]	11.4 @ 4500
		63-3067 [2]	11.4 @ 4500
2008 CHEVROLET			
Silverado 2500 HD	6.6L V8 DSL	57-3066 [1]	19.7 @ 2900
Silverado 3500 HD	6.0L V8 F/I	63-3067 [2]	11.4 @ 4500
		57-3067 [1]	11.4 @ 4500
Silverado 3500 HD	6.6L V8 DSL	57-3066 [1]	19.7 @ 2900
Suburban 1500	5.3L V8 F/I	57-3058 [1]	17.6 @ 4917
		77-3058KP [1]	12.5 @ 4917
Suburban 1500	6.0L V8 F/I	77-3058KP [1]	12.5 @ 4917
		57-3058 [1]	17.6 @ 4917
Tahoe	4.8L V8 F/I	77-3058KP [1]	12.5 @ 4917
		57-3058 [1]	17.6 @ 4917
Tahoe	5.3L V8 F/I	77-3058KP [1]	12.5 @ 4917
		57-3058 [1]	17.6 @ 4917
TrailBlazer	4.2L L6 F/I	77-3062KP [2]	9.3 @ 4850
		63-3062 [2]	9.5 @ 4725
TrailBlazer	6.0L V8 F/I	57-3061 [1]	19.2 @ 5331
2007 CHEVROLET			
Avalanche	5.3L V8 F/I	77-3058KP [1]	12.5 @ 4917
		57-3058 [1]	17.6 @ 4917
Avalanche	6.0L V8 F/I	57-3058 [1]	17.6 @ 4917
		77-3058KP [1]	12.5 @ 4917
Cheyenne 2500	5.3L V8 F/I	77-3058KP [2]	12.5 @ 4917
Cobalt	2.2L L4 F/I	69-4515TS [2]	6.6 @ 4800
Cobalt	2.4L L4 F/I	69-4517TTK [1]	15.9 @ 5900
Colorado	2.9L L4 F/I	63-3064-1 [2]	9.0 @ 4862
Colorado	3.7L L5 F/I	63-3065 [2]	11.0 @ 4754
		77-3065KP [2]	7.2 @ 4533
Corvette	6.0L V8 F/I	63-3052 [2]	10.1 @ 6000
Corvette Z06	7.0L V8 F/I	63-3060-1 [2]	27.2 @ 5600
HHR	2.4L L4 F/I	57-3056 [1]	9.3 @ 5325
Impala	5.3L V8 F/I	63-3059 [2]	13.5 @ 5222
Monte Carlo	5.3L V8 F/I	63-3059 [2]	13.5 @ 5222
Silverado 1500	4.8L V8 F/I	77-3058KP [1]	12.5 @ 4917
		57-3058 [1]	17.6 @ 4917
Silverado 1500	5.3L V8 F/I	77-3058KP [1]	12.5 @ 4917
		57-3058 [1]	17.6 @ 4917
Silverado 1500	6.0L V8 F/I	77-3058KP [1]	12.5 @ 4917
		57-3058 [1]	17.6 @ 4917
Silverado 1500 Classic	4.3L V6 F/I	57-3038 [1]	8.2 @ 4544
Silverado 1500 Classic	4.8L V8 F/I	57-3050 [1]	11.9 @ 5367
		77-3050KP [1]	8.4 @ 5336
Silverado 1500 Classic	5.3L V8 F/I	57-3050 [1]	11.9 @ 5367
		77-3050KP [1]	8.4 @ 5336
Silverado 1500 HD Classic	6.0L V8 F/I	57-3023-1 [1]	14.3 @ 5018
		77-3023KP [1]	8.2 @ 5067
Silverado 2500 HD	6.0L V8 F/I	57-3067 [1]	11.4 @ 4500
		63-3067 [2]	11.4 @ 4500
Silverado 2500 HD	6.6L V8 DSL	57-3066 [1]	19.7 @ 2900
Silverado 2500 HD Classic	6.0L V8 F/I	77-3031KP [1]	17.5 @ 5024
		57-3031-1 [1]	20.3 @ 4894
Silverado 2500 HD Classic	6.6L V8 DSL	57-3057 [1]	22.1 @ 2860

1) Street legal in all US states. 2) Street legal in most states, but not legal for use in California or other states with similar emission control regulations.
* Estimated horsepower gains are based on specific or similar vehicle dyno tests. Results will vary. See Page 479 for more information.
Partial Listing - Complete List of Vehicles and Applications at knfilters.com. See page 5 for information on intake tube materials/colors.

Vehicle	Engine Type	Intake Kit	Estimated Horsepower*
2007 CHEVROLET			
Silverado 2500 HD Classic	6.6L V8 DSL	57-3000 [1]	15.4 @ 2911
Silverado 2500 HD Classic	8.1L V8 F/I	57-3030-1 [1]	17.3 @ 4559
		63-3030 [2]	17.3 @ 4559
Silverado 3500 Classic	6.0L V8 F/I	57-3031-1 [1]	20.3 @ 4894
		77-3031KP [1]	17.5 @ 5024
Silverado 3500 Classic	6.6L V8 DSL	57-3000 [1]	15.4 @ 2911
		57-3057 [1]	22.1 @ 2860
Silverado 3500 Classic	8.1L V8 F/I	57-3030-1 [1]	17.3 @ 4559
Silverado 3500 HD	6.0L V8 F/I	57-3067 [1]	11.4 @ 4500
		63-3067 [2]	11.4 @ 4500
Silverado 3500 HD	6.6L V8 DSL	57-3066 [1]	19.7 @ 2900
Silverado SS Classic	6.0L V8 F/I	77-3050KP [1]	8.4 @ 5336
		57-3050 [1]	11.9 @ 5367
Suburban 1500	5.3L V8 F/I	57-3058 [1]	17.6 @ 4917
		77-3058KP [1]	12.5 @ 4917
Suburban 1500	6.0L V8 F/I	57-3058 [1]	17.6 @ 4917
		77-3058KP [1]	12.5 @ 4917
Suburban 2500	6.0L V8 F/I	57-3063 [1]	11.6 @ 5075
Tahoe	4.8L V8 F/I	57-3058 [1]	17.6 @ 4917
		77-3058KP [1]	12.5 @ 4917
Tahoe	5.3L V8 F/I	77-3058KP [1]	12.5 @ 4917
		57-3058 [1]	17.6 @ 4917
TrailBlazer	4.2L L6 F/I	63-3062 [2]	9.5 @ 4725
		77-3062KP [2]	9.3 @ 4850
TrailBlazer	6.0L V8 F/I	57-3061 [1]	19.2 @ 5331
2006 CHEVROLET			
Avalanche 1500	5.3L V8 F/I	77-3050KP [1]	8.4 @ 5336
		57-3050 [1]	11.9 @ 5367
Avalanche 2500	8.1L V8 F/I	57-3032 [1]	13.0 @ 4231
Cobalt	2.0L L4 F/I	69-4516TS [1]	8.1 @ 5829
Cobalt	2.2L L4 F/I	69-4515TS [1]	6.6 @ 4800
Cobalt	2.4L L4 F/I	69-4517TTK [1]	15.9 @ 5900
Colorado	2.8L L4 F/I	57-3051 [1]	11.5 @ 5863
Colorado	3.5L L5 F/I	57-3043 [1]	18.6 @ 6001
		77-3043KP [1]	9.2 @ 6057
Corvette	6.0L V8 F/I	63-3052 [2]	10.1 @ 6000
Corvette Z06	7.0L V8 F/I	63-3060-1 [2]	27.2 @ 5600
HHR	2.4L L4 F/I	57-3056 [1]	9.3 @ 5325
Impala	5.3L V8 F/I	63-3059 [2]	13.5 @ 5222
Monte Carlo	5.3L V8 F/I	63-3059 [2]	13.5 @ 5222
Silverado 1500	4.3L V6 F/I	57-3038 [1]	8.2 @ 4544
Silverado 1500	4.8L V8 F/I	77-3050KP [1]	8.4 @ 5336
		57-3050 [1]	11.9 @ 5367
Silverado 1500	5.3L V8 F/I	57-3050 [1]	11.9 @ 5367
		77-3050KP [1]	8.4 @ 5336
Silverado 1500	6.0L V8 F/I	57-3050 [1]	11.9 @ 5367
		77-3050KP [1]	8.4 @ 5336
Silverado 1500 HD	6.0L V8 F/I	57-3023-1 [1]	14.3 @ 5018
		77-3023KP [1]	8.2 @ 5067
Silverado 2500 HD	6.0L V8 F/I	77-3031KP [1]	17.5 @ 5024
		57-3031-1 [1]	20.3 @ 4894
2006 CHEVROLET			
Silverado 2500 HD	6.6L V8 DSL	57-3000 [1]	15.4 @ 2911
		57-3057 [1]	22.1 @ 2860
Silverado 2500 HD	8.1L V8 F/I	57-3030-1 [1]	17.3 @ 4559
Silverado 3500	6.0L V8 F/I	77-3031KP [1]	17.5 @ 5024
		57-3031-1 [1]	20.3 @ 4894
Silverado 3500	6.6L V8 DSL	57-3057 [1]	22.1 @ 2860
		57-3000 [1]	15.4 @ 2911
Silverado 3500	8.1L V8 F/I	57-3030-1 [1]	17.3 @ 4559
Silverado SS	6.0L V8 F/I	77-3050KP [1]	8.4 @ 5336
		57-3050 [1]	11.9 @ 5367
SSR	6.0L V8 F/I	57-3055 [1]	13.8 @ 4700
Suburban 1500	5.3L V8 F/I	77-3050KP [1]	8.4 @ 5336
		57-3050 [1]	11.9 @ 5367
Suburban 1500	6.0L V8 F/I	77-3023KP [1]	8.2 @ 5067
		57-3023-1 [1]	14.3 @ 5018
Suburban 2500	6.0L V8 F/I	57-3023-1 [1]	14.3 @ 5018
		77-3023KP [1]	8.2 @ 5067
Suburban 2500	8.1L V8 F/I	57-3032 [1]	13.0 @ 4231
Tahoe	4.8L V8 F/I	57-3050 [1]	11.9 @ 5367
		77-3050KP [1]	8.4 @ 5336
Tahoe	5.3L V8 F/I	57-3050 [1]	11.9 @ 5367
		77-3050KP [1]	8.4 @ 5336
TrailBlazer	4.2L L6 F/I	57-3062 [1]	9.5 @ 4725
		77-3062KP [1]	9.3 @ 4850
TrailBlazer	6.0L V8 F/I	57-3061 [1]	19.2 @ 5331
2005 CHEVROLET			
Avalanche 1500	5.3L V8 F/I	77-3050KP [1]	8.4 @ 5336
		57-3050 [1]	11.9 @ 5367
Avalanche 2500	8.1L V8 F/I	57-3032 [1]	13.0 @ 4231
Blazer	4.3L V6 F/I	57-3017-2 [1]	7.4 @ 4671
Cavalier Ecotec	2.2L L4 F/I	69-4510TS [1]	5.4 @ 5223
Cobalt	2.0L L4 F/I	69-4516TS [1]	8.1 @ 5829
Cobalt	2.2L L4 F/I	69-4515TS [1]	6.6 @ 4800
Colorado	2.8L L4 F/I	57-3051 [1]	11.5 @ 5863
Colorado	3.5L L5 F/I	77-3043KP [1]	9.2 @ 6057
		57-3043 [1]	18.6 @ 6001
Corvette	6.0L V8 F/I	57-3052 [1]	10.1 @ 6000
Impala	3.8L V6 F/I	57-3045 [1]	13.3 @ 5224
Monte Carlo	3.8L V6 F/I	57-3045 [1]	13.3 @ 5224
Silverado 1500	4.3L V6 F/I	57-3038 [1]	8.2 @ 4544
Silverado 1500	4.8L V8 F/I	77-3050KP [1]	8.4 @ 5336
		57-3050 [1]	11.9 @ 5367
Silverado 1500	5.3L V8 F/I	57-3050 [1]	11.9 @ 5367
		77-3050KP [1]	8.4 @ 5336
Silverado 1500 HD	6.0L V8 F/I	77-3023KP [1]	8.2 @ 5067
		57-3023-1 [1]	14.3 @ 5018
Silverado 2500 HD	6.0L V8 F/I	77-3031KP [1]	17.5 @ 5024
		57-3031-1 [1]	20.3 @ 4894
Silverado 2500 HD	6.6L V8 DSL - w/Panel Filter	77-3047KP [1]	20.2 @ 3158
		57-3047 [1]	20.1 @ 3157
Silverado 2500 HD	6.6L V8 DSL - w/Round Filter	57-3057 [1]	22.1 @ 2860
		57-3000 [1]	15.4 @ 2911
Silverado 2500 HD	8.1L V8 F/I	57-3030-1 [1]	17.3 @ 4559
Silverado 3500	6.0L V8 F/I	57-3031-1 [1]	20.3 @ 4894
		77-3031KP [1]	17.5 @ 5024
Silverado 3500	6.6L V8 DSL - w/Panel Filter	57-3047 [1]	20.1 @ 3157

1) Street legal in all US states. 2) Street legal in most states, but not legal for use in California or other states with similar emission control regulations.
* Estimated horsepower gains are based on specific or similar vehicle dyno tests. Results will vary. See Page 479 for more information.
Partial Listing - Complete List of Vehicles and Applications at knfilters.com. See page 5 for information on intake tube materials/colors.

Vehicle	Engine Type	Intake Kit	Estimated Horsepower*
2005 CHEVROLET			
Silverado 3500	6.6L V8 DSL - w/Panel Filter	77-3047KP [1]	20.2 @ 3158
Silverado 3500	6.6L V8 DSL - w/Round Filter	57-3000 [1]	15.4 @ 2911
		57-3057 [1]	22.1 @ 2860
Silverado 3500	8.1L V8 F/I	57-3030-1 [1]	17.3 @ 4559
Silverado SS	6.0L V8 F/I	77-3050KP [1]	8.4 @ 5336
		57-3050 [1]	11.9 @ 5367
SSR	6.0L V8 F/I	57-3055 [1]	13.8 @ 4700
Suburban 1500	5.3L V8 F/I	57-3050 [1]	11.9 @ 5367
		77-3050KP [1]	8.4 @ 5336
Suburban 2500	6.0L V8 F/I	57-3023-1 [1]	14.3 @ 5018
		77-3023KP [1]	8.2 @ 5067
Suburban 2500	8.1L V8 F/I	57-3032 [1]	13.0 @ 4231
Tahoe	4.8L V8 F/I	57-3050 [1]	11.9 @ 5367
		77-3050KP [1]	8.4 @ 5336
Tahoe	5.3L V8 F/I	77-3050KP [1]	8.4 @ 5336
		57-3050 [1]	11.9 @ 5367
TrailBlazer	4.2L L6 F/I	77-3036KP [1]	10.9 @ 5474
		57-3036 [1]	9.3 @ 5623
TrailBlazer	5.3L V8 F/I	57-3048 [1]	19.3 @ 5133
2004 CHEVROLET			
Avalanche 1500	5.3L V8 F/I	57-3033 [1]	10.2 @ 5244
		77-3023KP [1]	8.2 @ 5067
Avalanche 2500	8.1L V8 F/I	57-3032 [1]	13.0 @ 4231
Blazer	4.3L V6 F/I	57-3017-2 [1]	7.4 @ 4671
Cavalier Ecotec	2.2L L4 F/I	69-4510TS [1]	5.4 @ 5223
Colorado	2.8L L4 F/I	57-3051 [1]	11.5 @ 5863
Colorado	3.5L L5 F/I	77-3043KP [1]	9.2 @ 6057
		57-3043 [1]	18.6 @ 6001
Corvette	5.7L V8 F/I	57-3035 [1]	11.4 @ 4700
Corvette Z06	5.7L V8 F/I	63-1050 [2]	11.4 @ 4700
Impala	3.8L V6 F/I	57-3045 [1]	13.3 @ 5224
Monte Carlo	3.8L V6 F/I	57-3045 [1]	13.3 @ 5224
S10 Pickup	4.3L V6 F/I	57-3017-2 [1]	7.4 @ 4671
Silverado 1500	4.3L V6 F/I	57-3038 [1]	8.2 @ 4544
Silverado 1500	4.8L V8 F/I	77-3021KP [1]	8.2 @ 5067
		57-3021-1 [1]	9.1 @ 5352
Silverado 1500	5.3L V8 F/I	77-3021KP [1]	8.2 @ 5067
		57-3021-1 [1]	9.1 @ 5352
Silverado 2500	6.0L V8 F/I	57-3023-1 [1]	14.3 @ 5018
		77-3023KP [1]	8.2 @ 5067
Silverado 2500 HD	6.0L V8 F/I	77-3031KP [1]	17.5 @ 5024
		57-3031-1 [1]	20.3 @ 4894
Silverado 2500 HD	6.6L V8 DSL - LB7	57-3034 [1]	16.3 @ 3246
		77-3034KP [1]	12.6 @ 3246
Silverado 2500 HD	6.6L V8 DSL - LLY	57-3047 [1]	20.1 @ 3157
		77-3047KP [1]	20.2 @ 3158
Silverado 2500 HD	8.1L V8 F/I	57-3030-1 [1]	17.3 @ 4559
Silverado 3500	6.0L V8 F/I	77-3031KP [1]	17.5 @ 5024
		57-3031-1 [1]	20.3 @ 4894
Silverado 3500	6.6L V8 DSL - LB7	77-3034KP [1]	12.6 @ 3246
		57-3034 [1]	16.3 @ 2750
Silverado 3500	6.6L V8 DSL - LLY	57-3047 [1]	20.1 @ 3157
		77-3047KP [1]	20.2 @ 3158
Silverado 3500	8.1L V8 F/I	57-3030-1 [1]	17.3 @ 4559
Silverado SS	6.0L V8 F/I	77-3023KP [1]	8.2 @ 5067
		57-3023-1 [1]	14.3 @ 5018
SSR	5.3L V8 F/I	57-3046 [1]	5.4 @ 5200
2004 CHEVROLET			
Suburban 1500	5.3L V8 F/I	77-3023KP [1]	8.2 @ 5067
		57-3023-1 [1]	14.3 @ 5018
Suburban 2500	6.0L V8 F/I	77-3023KP [1]	8.2 @ 5067
		57-3023-1 [1]	14.3 @ 5018
Suburban 2500	8.1L V8 F/I	57-3032 [1]	13.0 @ 4231
Tahoe	4.8L V8 F/I	57-3023-1 [1]	14.3 @ 5018
		77-3023KP [1]	8.2 @ 5067
Tahoe	5.3L V8 F/I	57-3023-1 [1]	14.3 @ 5018
		77-3023KP [1]	8.2 @ 5067
TrailBlazer	4.2L L6 F/I	77-3036KP [1]	10.9 @ 5474
		57-3036 [1]	9.3 @ 5623
TrailBlazer	5.3L V8 F/I	57-3048 [1]	19.3 @ 5133
2003 CHEVROLET			
Avalanche 1500	5.3L V8 F/I	57-3033 [1]	10.2 @ 5244
		77-3023KP [1]	8.2 @ 5067
Avalanche 2500	8.1L V8 F/I	57-3032 [1]	13.0 @ 4231
Blazer	4.3L V6 F/I	57-3017-2 [1]	7.4 @ 4671
Cavalier	2.2L L4 F/I	69-4510TS [1]	5.4 @ 5223
Cavalier Ecotec	2.2L L4 F/I	69-4510TS [1]	5.4 @ 5223
Corvette	5.7L V8 F/I	57-3035 [1]	11.4 @ 4700
Corvette Z06	5.7L V8 F/I	63-1050 [2]	11.4 @ 4700
Impala	3.8L V6 F/I	57-3045 [1]	13.3 @ 5224
Monte Carlo	3.8L V6 F/I	57-3045 [1]	13.3 @ 5224
S10 Pickup	2.2L L4 F/I	57-3025-1 [1]	6.7 @ 4700
S10 Pickup	4.3L V6 F/I	57-3017-2 [1]	7.4 @ 4671
Silverado 1500	4.3L V6 F/I	57-3038 [1]	8.2 @ 4544
Silverado 1500	4.8L V8 F/I	77-3021KP [1]	8.2 @ 5067
		57-3021-1 [1]	9.1 @ 5352
Silverado 1500	5.3L V8 F/I	77-3021KP [1]	8.2 @ 5067
		57-3021-1 [1]	9.1 @ 5352
Silverado 1500 HD	6.0L V8 F/I	77-3023KP [1]	8.2 @ 5067
		57-3023-1 [1]	14.3 @ 5018
Silverado 2500	6.0L V8 F/I	57-3023-1 [1]	14.3 @ 5018
		77-3023KP [1]	8.2 @ 5067
Silverado 2500 HD	6.0L V8 F/I	77-3031KP [1]	17.5 @ 5024
		57-3031-1 [1]	20.3 @ 4894
Silverado 2500 HD	6.6L V8 DSL	57-3034 [1]	16.3 @ 2750
		77-3034KP [1]	12.6 @ 3246
Silverado 2500 HD	8.1L V8 F/I	57-3030-1 [1]	17.3 @ 4559
Silverado 3500	6.0L V8 F/I	77-3031KP [1]	17.5 @ 5024
		57-3031-1 [1]	20.3 @ 4894
Silverado 3500	6.6L V8 DSL	77-3034KP [1]	12.6 @ 3246
		57-3034 [1]	16.3 @ 2750
Silverado 3500	8.1L V8 F/I	57-3030-1 [1]	17.3 @ 4559
Silverado SS	6.0L V8 F/I	77-3023KP [1]	8.2 @ 5067
		57-3023-1 [1]	14.3 @ 5018
SSR	5.3L V8 F/I	57-3046 [1]	5.4 @ 5200
Suburban 1500	5.3L V8 F/I	77-3023KP [1]	8.2 @ 5067
		57-3023-1 [1]	14.3 @ 5018
Suburban 2500	6.0L V8 F/I	57-3023-1 [1]	14.3 @ 5018
		77-3023KP [1]	8.2 @ 5067
Suburban 2500	8.1L V8 F/I	57-3032 [1]	13.0 @ 4231
Tahoe	4.8L V8 F/I	57-3023-1 [1]	14.3 @ 5018
		77-3023KP [1]	8.2 @ 5067
Tahoe	5.3L V8 F/I	57-3023-1 [1]	14.3 @ 5018
		77-3023KP [1]	8.2 @ 5067
TrailBlazer	4.2L L6 F/I	77-3036KP [1]	10.9 @ 5474
		57-3036 [1]	9.3 @ 5623

1) Street legal in all US states. 2) Street legal in most states, but not legal for use in California or other states with similar emission control regulations.
* Estimated horsepower gains are based on specific or similar vehicle dyno tests. Results will vary. See Page 479 for more information.
Partial Listing - Complete List of Vehicles and Applications at knfilters.com. See page 5 for information on intake tube materials/colors.

Vehicle	Engine Type	Intake Kit	Estimated Horsepower*
2003 CHEVROLET			
TrailBlazer	5.3L V8 F/I	57-3048 [1]	19.3 @ 5133
2002 CHEVROLET			
Avalanche 1500	5.3L V8 F/I	57-3033 [1]	10.2 @ 5244
		77-3023KP [1]	8.2 @ 5067
Avalanche 2500	8.1L V8 F/I	57-3032 [1]	13.0 @ 4231
Blazer	4.3L V6 F/I	57-3017-2 [1]	7.4 @ 4671
Camaro	3.8L V6 F/I	57-3041 [1]	6.8 @ 5066
Camaro	5.7L V8 F/I	57-3022-2 [1]	14.7 @ 5300
Cavalier Ecotec	2.2L L4 F/I	69-4510TS [1]	5.4 @ 5223
Corvette	5.7L V8 F/I	57-3035 [1]	11.4 @ 4700
Corvette Z06	5.7L V8 F/I	63-1050 [2]	11.4 @ 4700
Impala	3.8L V6 F/I	57-3045 [1]	13.3 @ 5224
Monte Carlo	3.8L V6 F/I	57-3045 [1]	13.3 @ 5224
S10 Pickup	2.2L L4 F/I	57-3025-1 [1]	6.7 @ 4700
S10 Pickup	4.3L V6 F/I	57-3017-2 [1]	7.4 @ 4671
Silverado 1500	4.3L V6 F/I	57-3038 [1]	8.2 @ 4544
Silverado 1500	4.8L V8 F/I	77-3021KP [1]	8.2 @ 5067
		57-3021-1 [1]	9.1 @ 5352
Silverado 1500	5.3L V8 F/I	77-3021KP [1]	8.2 @ 5067
		57-3021-1 [1]	9.1 @ 5352
Silverado 1500 HD	6.0L V8 F/I	77-3023KP [1]	8.2 @ 5067
		57-3023-1 [1]	14.3 @ 5018
Silverado 2500	6.0L V8 F/I	77-3023KP [1]	8.2 @ 5067
		57-3023-1 [1]	14.3 @ 5018
Silverado 2500 HD	6.0L V8 F/I	77-3031KP [1]	17.5 @ 5024
		57-3031-1 [1]	20.3 @ 4894
Silverado 2500 HD	6.6L V8 DSL	77-3034KP [1]	12.6 @ 3246
		57-3034 [1]	16.3 @ 2750
Silverado 2500 HD	8.1L V8 F/I	57-3030-1 [1]	17.3 @ 4559
Silverado 3500	6.0L V8 F/I	57-3031-1 [1]	20.3 @ 4894
Silverado 3500	6.6L V8 DSL	77-3034KP [1]	12.6 @ 3246
		57-3034 [1]	16.3 @ 2750
Silverado 3500	8.1L V8 F/I	57-3030-1 [1]	17.3 @ 4559
Suburban 1500	5.3L V8 F/I	77-3023KP [1]	8.2 @ 5067
		57-3023-1 [1]	14.3 @ 5018
Suburban 2500	6.0L V8 F/I	77-3023KP [1]	8.2 @ 5067
		57-3023-1 [1]	14.3 @ 5018
Suburban 2500	8.1L V8 F/I	57-3032 [1]	13.0 @ 4231
Tahoe	4.8L V8 F/I	57-3023-1 [1]	14.3 @ 5018
		77-3023KP [1]	8.2 @ 5067
Tahoe	5.3L V8 F/I	57-3023-1 [1]	14.3 @ 5018
		77-3023KP [1]	8.2 @ 5067
TrailBlazer	4.2L L6 F/I	77-3036KP [1]	10.9 @ 5474
		57-3036 [1]	9.3 @ 5623
2001 CHEVROLET			
Blazer	4.3L V6 F/I	57-3017-2 [1]	7.4 @ 4671
Camaro	3.8L V6 F/I	57-3041 [1]	6.8 @ 5066
Camaro	5.7L V8 F/I	57-3022-2 [1]	14.7 @ 5300
Corvette	5.7L V8 F/I	57-3035 [1]	11.4 @ 4700
Corvette Z06	5.7L V8 F/I	63-1050 [2]	11.4 @ 4700
Impala	3.8L V6 F/I	57-3045 [1]	13.3 @ 5224
Monte Carlo	3.8L V6 F/I	57-3045 [1]	13.3 @ 5224
S10 Pickup	2.2L L4 F/I	57-3025-1 [1]	6.7 @ 4700
S10 Pickup	4.3L V6 F/I	57-3017-2 [1]	7.4 @ 4671
Silverado 1500	4.3L V6 F/I	57-3038 [1]	8.2 @ 4544
Silverado 1500	4.8L V8 F/I	57-3021-1 [1]	9.1 @ 5352
		77-3021KP [1]	8.2 @ 5067
Silverado 1500	5.3L V8 F/I	57-3021-1 [1]	9.1 @ 5352
Silverado 1500	5.3L V8 F/I	77-3021KP [1]	8.2 @ 5067
Silverado 1500 HD	6.0L V8 F/I	77-3023KP [1]	8.2 @ 5067
		57-3023-1 [1]	14.3 @ 5018
Silverado 2500	6.0L V8 F/I	77-3023KP [1]	8.2 @ 5067
		57-3023-1 [1]	14.3 @ 5018
Silverado 2500 HD	6.0L V8 F/I	77-3031KP [1]	17.5 @ 5024
		57-3031-1 [1]	20.3 @ 4894
Silverado 2500 HD	6.6L V8 DSL	57-3034 [1]	16.3 @ 2750
		77-3034KP [1]	12.6 @ 3246
Silverado 2500 HD	8.1L V8 F/I	57-3030-1 [1]	17.3 @ 4559
Silverado 3500	6.0L V8 F/I	77-3031KP [1]	17.5 @ 5024
		57-3031-1 [1]	20.3 @ 4894
Silverado 3500	6.6L V8 DSL	77-3034KP [1]	12.6 @ 3246
		57-3034 [1]	16.3 @ 2750
Silverado 3500	8.1L V8 F/I	57-3030-1 [1]	17.3 @ 4559
Suburban 1500	5.3L V8 F/I	77-3023KP [1]	8.2 @ 5067
		57-3023-1 [1]	14.3 @ 5018
Suburban 2500	6.0L V8 F/I	77-3023KP [1]	8.2 @ 5067
		57-3023-1 [1]	14.3 @ 5018
Suburban 2500	8.1L V8 F/I	57-3032 [1]	13.0 @ 4231
Tahoe	4.8L V8 F/I	57-3023-1 [1]	14.3 @ 5018
		77-3023KP [1]	8.2 @ 5067
Tahoe	5.3L V8 F/I	77-3023KP [1]	8.2 @ 5067
		57-3023-1 [1]	14.3 @ 5018
2000 CHEVROLET			
Blazer	4.3L V6 F/I	57-3017-2 [1]	7.4 @ 4671
C2500	5.7L V8 F/I	57-3013-2 [1]	9.5 @ 4918
C2500	7.4L V8 F/I	57-3016-1 [1]	21.5 @ 4078
C3500	5.7L V8 F/I	57-3013-2 [1]	9.5 @ 4918
C3500	7.4L V8 F/I	57-3016-1 [1]	21.5 @ 4078
Camaro	3.8L V6 F/I	57-3041 [1]	6.8 @ 5066
Camaro	5.7L V8 F/I	57-3022-2 [1]	14.7 @ 5300
Corvette	5.7L V8 F/I	57-3020 [1]	18.3 @ 5500
Impala	3.8L V6 F/I	57-3045 [1]	13.3 @ 5224
K2500	5.7L V8 F/I	57-3013-2 [1]	9.5 @ 4918
K2500	7.4L V8 F/I	57-3016-1 [1]	21.5 @ 4078
K3500	5.7L V8 F/I	57-3013-2 [1]	9.5 @ 4918
K3500	7.4L V8 F/I	57-3016-1 [1]	21.5 @ 4078
Monte Carlo	3.8L V6 F/I	57-3045 [1]	13.3 @ 5224
S10 Pickup	2.2L L4 F/I	57-3025-1 [1]	6.7 @ 4700
S10 Pickup	4.3L V6 F/I	57-3017-2 [1]	7.4 @ 4672
Silverado 1500	4.3L V6 F/I	57-3038 [1]	8.2 @ 4544
Silverado 1500	4.8L V8 F/I	77-3021KP [1]	8.2 @ 5067
		57-3021-1 [1]	9.1 @ 5352
Silverado 1500	5.3L V8 F/I	57-3021-1 [1]	9.1 @ 5352
		77-3021KP [1]	8.2 @ 5067
Silverado 2500	5.3L V8 F/I	77-3023KP [1]	8.2 @ 5067
		57-3023-1 [1]	14.3 @ 5018
Silverado 2500	6.0L V8 F/I	57-3023-1 [1]	14.3 @ 5018
		77-3023KP [1]	8.2 @ 5067
Suburban 1500	5.3L V8 F/I	77-3023KP [1]	8.2 @ 5067
		57-3023-1 [1]	14.3 @ 5018
Suburban 1500	5.7L V8 F/I	57-3013-2 [1]	9.5 @ 4918
Suburban 2500	5.3L V8 F/I	57-3023-1 [1]	14.3 @ 5018
Suburban 2500	6.0L V8 F/I	77-3023KP [1]	8.2 @ 5067
		57-3023-1 [1]	14.3 @ 5018
Tahoe	4.8L V8 F/I	57-3023-1 [1]	14.3 @ 5018
		77-3023KP [1]	8.2 @ 5067

1) Street legal in all US states. 2) Street legal in most states, but not legal for use in California or other states with similar emission control regulations.
* Estimated horsepower gains are based on specific or similar vehicle dyno tests. Results will vary. See Page 479 for more information.
Partial Listing - Complete List of Vehicles and Applications at knfilters.com. See page 5 for information on intake tube materials/colors.

Vehicle	Engine Type	Intake Kit	Estimated Horsepower*
2000 CHEVROLET			
Tahoe	5.3L V8 F/I	57-3023-1 [1]	14.3 @ 5018
		77-3023KP [1]	8.2 @ 5067
Tahoe	5.7L V8 F/I	57-3013-2 [1]	9.5 @ 4918
1999 CHEVROLET			
Blazer	4.3L V6 F/I	57-3017-2 [1]	7.4 @ 4671
C1500	5.0L V8 F/I	57-3013-2 [1]	9.5 @ 4918
C1500	5.7L V8 F/I	57-3013-2 [1]	9.5 @ 4918
C1500 Suburban	5.7L V8 F/I	57-3013-2 [1]	9.5 @ 4918
C2500	5.7L V8 F/I	57-3013-2 [1]	9.5 @ 4918
C2500	7.4L V8 F/I	57-3016-1 [1]	21.5 @ 4078
C2500 Suburban	5.7L V8 F/I	57-3013-2 [1]	9.5 @ 4918
C2500 Suburban	7.4L V8 F/I	57-3016-1 [1]	21.5 @ 4078
C3500	5.7L V8 F/I	57-3013-2 [1]	9.5 @ 4918
C3500	7.4L V8 F/I	57-3016-1 [1]	21.5 @ 4078
Camaro	3.8L V6 F/I	57-3041 [1]	6.8 @ 5066
Camaro	5.7L V8 F/I	57-3022-2 [1]	14.7 @ 5300
Corvette	5.7L V8 F/I	57-3020 [1]	18.3 @ 5600
K1500	5.0L V8 F/I	57-3013-2 [1]	9.5 @ 4918
K1500	5.7L V8 F/I	57-3013-2 [1]	9.5 @ 4918
K1500 Suburban	5.7L V8 F/I	57-3013-2 [1]	9.5 @ 4918
K2500	5.7L V8 F/I	57-3013-2 [1]	9.5 @ 4918
K2500	7.4L V8 F/I	57-3016-1 [1]	21.5 @ 4078
K2500 Suburban	5.7L V8 F/I	57-3013-2 [1]	9.5 @ 4918
K2500 Suburban	7.4L V8 F/I	57-3016-1 [1]	21.5 @ 4078
K3500	7.4L V8 F/I	57-3016-1 [1]	21.5 @ 4078
S10 Pickup	2.2L L4 F/I	57-3025-1 [1]	6.7 @ 4700
S10 Pickup	4.3L V6 F/I	57-3017-2 [1]	7.4 @ 4671
Silverado 1500	4.3L V6 F/I	57-3038 [1]	8.2 @ 4544
Silverado 1500	4.8L V8 F/I	77-3021KP [1]	8.2 @ 5067
		57-3021-1 [1]	9.1 @ 5352
Silverado 1500	5.3L V8 F/I	77-3021KP [1]	8.2 @ 5067
		57-3021-1 [1]	9.1 @ 5352
Silverado 2500	5.3L V8 F/I	77-3023KP [1]	8.2 @ 5067
		57-3023-1 [1]	14.3 @ 5018
Silverado 2500	6.0L V8 F/I	77-3023KP [1]	8.2 @ 5067
		57-3023-1 [1]	14.3 @ 5018
Tahoe	5.7L V8 F/I	57-3013-2 [1]	9.5 @ 4918
1998 CHEVROLET			
Blazer	4.3L V6 F/I	57-3017-2 [1]	7.4 @ 4671
C1500	4.3L V6 F/I	57-3039 [1]	6.0 @ 4476
C1500	5.0L V8 F/I	57-3013-2 [1]	9.5 @ 4918
C1500	5.7L V8 F/I	57-3013-2 [1]	9.5 @ 4918
C1500 Suburban	5.7L V8 F/I	57-3013-2 [1]	9.5 @ 4918
C2500	5.7L V8 F/I	57-3013-2 [1]	9.5 @ 4918
C2500	7.4L V8 F/I	57-3016-1 [1]	21.5 @ 4078
C2500 Suburban	5.7L V8 F/I	57-3013-2 [1]	9.5 @ 4918
C2500 Suburban	7.4L V8 F/I	57-3016-1 [1]	21.5 @ 4078
C3500	5.7L V8 F/I	57-3013-2 [1]	9.5 @ 4918
C3500	7.4L V8 F/I	57-3016-1 [1]	21.5 @ 4078
Camaro	5.7L V8 F/I	57-3022-2 [1]	14.7 @ 5300
Corvette	5.7L V8 F/I	57-3020 [1]	18.3 @ 5500
K1500	5.0L V8 F/I	57-3013-2 [1]	9.5 @ 4918
K1500	5.7L V8 F/I	57-3013-2 [1]	9.5 @ 4918
K1500 Suburban	5.7L V8 F/I	57-3013-2 [1]	9.5 @ 4918
K2500	5.7L V8 F/I	57-3013-2 [1]	9.5 @ 4918
K2500	7.4L V8 F/I	57-3016-1 [1]	21.5 @ 4078
K2500 Suburban	5.7L V8 F/I	57-3013-2 [1]	9.5 @ 4918
K2500 Suburban	7.4L V8 F/I	57-3016-1 [1]	21.5 @ 4078
K3500	5.7L V8 F/I	57-3013-2 [1]	9.5 @ 4918
K3500	7.4L V8 F/I	57-3016-1 [1]	21.5 @ 4078
S10 Pickup	2.2L L4 F/I	57-3025-1 [1]	6.7 @ 4700
S10 Pickup	4.3L V6 F/I	57-3017-2 [1]	7.4 @ 4671
Tahoe	5.7L V8 F/I	57-3013-2 [1]	9.5 @ 4918
1997 CHEVROLET			
Blazer	4.3L V6 F/I	57-3017-2 [1]	7.4 @ 4671
C1500	4.3L V6 F/I	57-3039 [1]	6.0 @ 4476
C1500	5.0L V8 F/I	57-3013-2 [1]	9.5 @ 4918
C1500	5.7L V8 F/I	57-3013-2 [1]	9.5 @ 4918
C1500 Suburban	5.7L V8 F/I	57-3013-2 [1]	9.5 @ 4918
C2500	5.7L V8 F/I	57-3013-2 [1]	9.5 @ 4918
C2500	7.4L V8 F/I	57-3016-1 [1]	21.5 @ 4078
C2500 Suburban	5.7L V8 F/I	57-3013-2 [1]	9.5 @ 4918
C2500 Suburban	7.4L V8 F/I	57-3016-1 [1]	21.5 @ 4078
C3500	5.7L V8 F/I	57-3013-2 [1]	9.5 @ 4918
C3500	7.4L V8 F/I	57-3016-1 [1]	21.5 @ 4078
Camaro	5.7L V8 F/I - w/o ram air or traction control	57-3010-1 [1]	18.3 @ 5331
Corvette	5.7L V8 F/I	57-3020 [1]	18.3 @ 5500
K1500	4.3L V6 F/I	57-3039 [1]	6.0 @ 4476
K1500	5.0L V8 F/I	57-3013-2 [1]	9.5 @ 4918
K1500	5.7L V8 F/I	57-3013-2 [1]	9.5 @ 4918
K1500 Suburban	5.7L V8 F/I	57-3013-2 [1]	9.5 @ 4918
K2500	5.7L V8 F/I	57-3013-2 [1]	9.5 @ 4918
K2500	7.4L V8 F/I	57-3016-1 [1]	21.5 @ 4078
K2500 Suburban	5.7L V8 F/I	57-3013-2 [1]	9.5 @ 4918
K2500 Suburban	7.4L V8 F/I	57-3016-1 [1]	21.5 @ 4078
K3500	7.4L V8 F/I	57-3016-1 [1]	21.5 @ 4078
S10 Pickup	2.2L L4 F/I	57-3024 [1]	7.5 @ 5224
S10 Pickup	4.3L V6 F/I	57-3017-2 [1]	7.4 @ 4671
Tahoe	5.7L V8 F/I	57-3013-2 [1]	9.5 @ 4918
1996 CHEVROLET			
Blazer	4.3L V6 F/I	57-3017-2 [1]	7.4 @ 4671
C1500	4.3L V6 F/I	57-3039 [1]	6.0 @ 4476
C1500	5.0L V8 F/I	57-3013-2 [1]	9.5 @ 4916
C1500	5.7L V8 F/I	57-3013-2 [1]	9.5 @ 4918
C1500 Suburban	5.7L V8 F/I	57-3013-2 [1]	9.5 @ 4918
C2500	5.7L V8 F/I	57-3013-2 [1]	9.5 @ 4918
C2500	7.4L V8 F/I	57-3016-1 [1]	21.5 @ 4078
C2500 Suburban	5.7L V8 F/I	57-3013-2 [1]	9.5 @ 4918
C2500 Suburban	7.4L V8 F/I	57-3016-1 [1]	21.5 @ 4078
C3500	7.4L V8 F/I	57-3016-1 [1]	21.5 @ 4078
Camaro	5.7L V8 F/I - w/o ram air or traction control	57-3010-1 [1]	18.3 @ 5333
Caprice	5.7L V8 F/I	57-3011 [1]	18.8 @ 4760
Impala SS	5.7L V8 F/I	57-3011 [1]	18.8 @ 4760
K1500	4.3L V6 F/I	57-3039 [1]	6.0 @ 4476
K1500	5.0L V8 F/I	57-3013-2 [1]	9.5 @ 4916
K1500	5.7L V8 F/I	57-3013-2 [1]	9.5 @ 4918
K1500 Suburban	5.7L V8 F/I	57-3013-2 [1]	9.5 @ 4918
K2500	5.7L V8 F/I	57-3013-2 [1]	9.5 @ 4918
K2500	7.4L V8 F/I	57-3016-1 [1]	21.5 @ 4078
K2500 Suburban	5.7L V8 F/I	57-3013-2 [1]	9.5 @ 4918
K2500 Suburban	7.4L V8 F/I	57-3016-1 [1]	21.5 @ 4078
K3500	7.4L V8 F/I	57-3016-1 [1]	21.5 @ 4078
S10 Pickup	2.2L L4 F/I	57-3024 [1]	7.5 @ 5224
S10 Pickup	4.3L V6 F/I	57-3017-2 [1]	7.4 @ 4671
Tahoe	5.7L V8 F/I	57-3013-2 [1]	9.5 @ 4918

1) Street legal in all US states. 2) Street legal in most states, but not legal for use in California or other states with similar emission control regulations.
* Estimated horsepower gains are based on specific or similar vehicle dyno tests. Results will vary. See Page 479 for more information.
Partial Listing - Complete List of Vehicles and Applications at knfilters.com. See page 5 for information on intake tube materials/colors.

1995 CHEVROLET

Vehicle	Engine Type	Intake Kit	Estimated Horsepower*
Blazer	4.3L V6 F/I	57-3009 [1]	7.1 @ 4571
C1500	5.0L V8 F/I	63-1007-1 [2]	6.7 @ 4107
		57-3026 [1]	6.7 @ 4107
C1500	5.7L V8 F/I	57-3026 [1]	6.7 @ 4107
		63-1007-1 [2]	6.7 @ 4107
C1500 Suburban	5.7L V8 F/I	63-1007-1 [2]	6.7 @ 4107
		57-3026 [1]	6.7 @ 4107
C2500	5.7L V8 F/I	57-3026 [1]	6.7 @ 4107
		63-1007-1 [2]	6.7 @ 4107
C2500	7.4L V8 F/I	57-3027 [1]	7.4 @ 3571
C2500	7.4L V8 F/I - w/o heat stove	57-3014 [1]	17.6 @ 3811
C2500 Suburban	5.7L V8 F/I	63-1007-1 [2]	6.7 @ 4107
		57-3026 [1]	6.7 @ 4107
C2500 Suburban	7.4L V8 F/I	57-3027 [1]	7.4 @ 3571
		63-1007-1 [2]	6.7 @ 4107
C2500 Suburban	7.4L V8 F/I - w/o heat stove	57-3014 [1]	17.6 @ 3811
C3500	7.4L V8 F/I	63-1007-1 [2]	6.7 @ 4107
		57-3027 [1]	7.4 @ 3571
C3500	7.4L V8 F/I - w/o heat stove	57-3014 [1]	17.6 @ 3810
Camaro	3.4L V6 F/I - w/o ram air or traction control	57-3010-1 [1]	18.3 @ 5331
Camaro	5.7L V8 F/I - w/o ram air or traction control	57-3010-1 [1]	18.3 @ 5331
Caprice	5.7L V8 F/I	57-3011 [1]	18.8 @ 4760
Impala SS	5.7L V8 F/I	57-3011 [1]	18.8 @ 4760
K1500	5.0L V8 F/I	57-3026 [1]	6.7 @ 4107
		63-1007-1 [2]	6.7 @ 4107
K1500	5.7L V8 F/I	63-1007-1 [2]	6.7 @ 4107
		57-3026 [1]	6.7 @ 4107
K1500 Suburban	5.7L V8 F/I	57-3026 [1]	6.7 @ 4107
		63-1007-1 [2]	6.7 @ 4107
K2500	5.7L V8 F/I	57-3026 [1]	6.7 @ 4107
		63-1007-1 [2]	6.7 @ 4107
K2500	7.4L V8 F/I	63-1007-1 [2]	6.7 @ 4107
		57-3027 [1]	7.4 @ 3571
K2500	7.4L V8 F/I - w/o heat stove	57-3014 [1]	17.6 @ 3811
K2500 Suburban	5.7L V8 F/I	63-1007-1 [2]	6.7 @ 4107
		57-3026 [1]	6.7 @ 4107
K2500 Suburban	7.4L V8 F/I	63-1007-1 [2]	6.7 @ 4107
		57-3027 [1]	7.4 @ 3571
K2500 Suburban	7.4L V8 F/I - w/o heat stove	57-3014 [1]	17.6 @ 3811
K3500	7.4L V8 F/I	63-1007-1 [2]	6.7 @ 4107
		57-3027 [1]	7.4 @ 3571
K3500	7.4L V8 F/I - w/o heat stove	57-3014 [1]	17.6 @ 3811
S10 Pickup	2.2L L4 F/I	57-3024 [1]	7.5 @ 5224
S10 Pickup	4.3L V6 CPI	57-3009 [1]	7.1 @ 4572
S10 Pickup	4.3L V6 TBI	57-3029 [1]	4.7 @ 3971
Tahoe	5.7L V8 F/I	57-3026 [1]	6.7 @ 4107
		63-1007-1 [2]	6.7 @ 4107

1994 CHEVROLET

Vehicle	Engine Type	Intake Kit	Estimated Horsepower*
Blazer	5.7L V8 F/I	63-1007-1 [2]	6.7 @ 4107
		57-3026 [1]	6.7 @ 4107
C1500	5.0L V8 F/I	63-1007-1 [2]	6.7 @ 4107
		57-3026 [1]	6.7 @ 4107
C1500	5.7L V8 F/I	63-1007-1 [2]	6.7 @ 4107
		57-3026 [1]	10.3 @ 4237
C1500 Suburban	5.7L V8 F/I	63-1007-1 [2]	6.7 @ 4107
		57-3026 [1]	10.3 @ 4237
C2500	5.7L V8 F/I	63-1007-1 [2]	6.7 @ 4107
		57-3026 [1]	6.7 @ 4107
C2500	7.4L V8 F/I	57-3027 [1]	7.4 @ 3571
C2500 Suburban	5.7L V8 F/I	63-1007-1 [2]	6.7 @ 4107
		57-3026 [1]	6.7 @ 4107
C2500 Suburban	7.4L V8 F/I	63-1007-1 [2]	6.7 @ 4107
		57-3027 [1]	7.4 @ 3571
C2500 Suburban	7.4L V8 F/I - w/o heat stove	57-3014 [1]	17.6 @ 3811
C3500	7.4L V8 F/I	63-1007-1 [2]	6.7 @ 4107
		57-3027 [1]	7.4 @ 3571
C3500	7.4L V8 F/I - w/o heat stove	57-3014 [1]	17.6 @ 3811
Camaro	3.4L V6 F/I - w/o ram air or traction control	57-3010-1 [1]	18.3 @ 5331
Camaro	5.7L V8 F/I - w/o ram air or traction control	57-3010-1 [1]	18.3 @ 5331
Caprice	5.7L V8 F/I	57-3011 [1]	18.8 @ 4760
Impala SS	5.7L V8 F/I	57-3011 [1]	18.8 @ 4760
K1500	5.0L V8 F/I	63-1007-1 [2]	6.7 @ 4107
		57-3026 [1]	6.7 @ 4107
K1500	5.7L V8 F/I	63-1007-1 [2]	6.7 @ 4107
		57-3026 [1]	10.3 @ 4237
K1500 Suburban	5.7L V8 F/I	63-1007-1 [2]	6.7 @ 4107
		57-3026 [1]	10.3 @ 4237
K2500	5.7L V8 F/I	63-1007-1 [2]	6.7 @ 4107
		57-3026 [1]	6.7 @ 4107
K2500	7.4L V8 F/I	63-1007-1 [2]	6.7 @ 4107
		57-3027 [1]	7.4 @ 3571
K2500	7.4L V8 F/I - w/o heat stove	57-3014 [1]	17.6 @ 3811
K2500 Suburban	5.7L V8 F/I	63-1007-1 [2]	6.7 @ 4107
		57-3026 [1]	6.7 @ 4107
K2500 Suburban	7.4L V8 F/I	63-1007-1 [2]	6.7 @ 4107
		57-3027 [1]	7.4 @ 3571
K2500 Suburban	7.4L V8 F/I - w/o heat stove	57-3014 [1]	17.6 @ 3811
K3500	7.4L V8 F/I	63-1007-1 [2]	6.7 @ 4107
		57-3027 [1]	7.4 @ 3571
K3500	7.4L V8 F/I - w/o heat stove	57-3014 [1]	17.6 @ 3811
S10 Blazer	4.3L V6 TBI	57-3029 [1]	4.7 @ 3971
S10 Pickup	2.2L L4 F/I	57-3024 [1]	7.5 @ 5224
S10 Pickup	4.3L V6 CPI	57-3009 [1]	7.1 @ 4571
S10 Pickup	4.3L V6 TBI	57-3029 [1]	4.7 @ 3971

1993 CHEVROLET

Vehicle	Engine Type	Intake Kit	Estimated Horsepower*
Blazer	5.7L V8 F/I	63-1007-1 [2]	6.7 @ 4107
		57-3026 [1]	6.7 @ 4107
C1500	5.0L V8 F/I	63-1007-1 [2]	6.7 @ 4107
		57-3026 [1]	6.7 @ 4107
C1500	5.7L V8 F/I	63-1007-1 [2]	6.7 @ 4107
		57-3026 [1]	6.7 @ 4107
C1500	7.4L V8 F/I	63-1007-1 [2]	6.7 @ 4107
		57-3027 [1]	7.4 @ 3571
C1500	7.4L V8 F/I - w/o heat stove	57-3014 [1]	17.6 @ 3811
C1500 Suburban	5.7L V8 F/I	63-1007-1 [2]	6.7 @ 4107
		57-3026 [1]	6.7 @ 4107
C2500	5.7L V8 F/I	63-1007-1 [2]	6.7 @ 4107
		57-3026 [1]	6.7 @ 4107

1) Street legal in all US states. 2) Street legal in most states, but not legal for use in California or other states with similar emission control regulations.
* Estimated horsepower gains are based on specific or similar vehicle dyno tests. Results will vary. See Page 479 for more information.
Partial Listing - Complete List of Vehicles and Applications at knfilters.com. See page 5 for information on intake tube materials/colors.

Vehicle	Engine Type	Intake Kit	Estimated Horsepower*
1993 CHEVROLET			
C2500 Suburban	5.7L V8 F/I	57-3026 [1]	6.7 @ 4107
		63-1007-1 [2]	6.7 @ 4107
C2500 Suburban	7.4L V8 F/I	63-1007-1 [2]	6.7 @ 4107
		57-3027 [1]	7.4 @ 3571
C2500 Suburban	7.4L V8 F/I - w/o heat stove	57-3014 [1]	17.6 @ 3811
C3500	7.4L V8 F/I	57-3027 [1]	7.4 @ 3571
		63-1007-1 [2]	6.7 @ 4107
C3500	7.4L V8 F/I - w/o heat stove	57-3014 [1]	17.6 @ 3811
Camaro	3.4L V6 F/I - w/o ram air or traction control	57-3010-1 [1]	18.3 @ 5331
Camaro	5.7L V8 F/I - w/o ram air or traction control	57-3010-1 [1]	18.3 @ 5331
K1500	5.0L V8 F/I	63-1007-1 [2]	6.7 @ 4107
		57-3026 [1]	6.7 @ 4107
K1500	5.7L V8 F/I	63-1007-1 [2]	6.7 @ 4107
		57-3026 [1]	6.7 @ 4107
K1500 Suburban	5.7L V8 F/I	63-1007-1 [2]	6.7 @ 4107
		57-3026 [1]	6.7 @ 4107
K2500	5.7L V8 F/I	63-1007-1 [2]	6.7 @ 4107
		57-3026 [1]	6.7 @ 4107
K2500	7.4L V8 F/I	57-3027 [1]	7.4 @ 3571
K2500 Suburban	5.7L V8 F/I	63-1007-1 [2]	6.7 @ 4107
		57-3026 [1]	6.7 @ 4107
K2500 Suburban	7.4L V8 F/I	57-3027 [1]	7.4 @ 3571
		63-1007-1 [2]	6.7 @ 4107
K2500 Suburban	7.4L V8 F/I - w/o heat stove	57-3014 [1]	17.6 @ 3811
K3500	7.4L V8 F/I	57-3027 [1]	7.4 @ 3571
S10 Blazer	4.3L V6 TBI	57-3028 [1]	5.6 @ 3963
S10 Pickup	4.3L V6 TBI	57-3028 [1]	5.6 @ 3963
1992 CHEVROLET			
Blazer	5.7L V8 F/I	63-1007-1 [2]	6.7 @ 4107
		57-3026 [1]	6.7 @ 4107
C1500	5.0L V8 F/I	63-1007-1 [2]	6.7 @ 4107
		57-3026 [1]	6.7 @ 4107
C1500	5.7L V8 F/I	57-3026 [1]	6.7 @ 4107
		63-1007-1 [2]	6.7 @ 4107
C1500	7.4L V8 F/I	63-1007-1 [2]	6.7 @ 4107
		57-3027 [1]	7.4 @ 3571
C1500	7.4L V8 F/I - w/o heat stove	57-3014 [1]	17.6 @ 3811
C1500 Suburban	5.7L V8 F/I	63-1007-1 [2]	6.7 @ 4107
		57-3026 [1]	6.7 @ 4107
C2500	5.7L V8 F/I	57-3026 [1]	6.7 @ 4107
C2500 Suburban	5.7L V8 F/I	57-3026 [1]	6.7 @ 4107
		63-1007-1 [2]	6.7 @ 4107
C3500	7.4L V8 F/I	63-1007-1 [2]	6.7 @ 4107
		57-3027 [1]	7.4 @ 3571
C3500	7.4L V8 F/I - w/o heat stove	57-3014 [1]	17.6 @ 3811
K1500	5.0L V8 F/I	63-1007-1 [2]	6.7 @ 4107
		57-3026 [1]	6.7 @ 4107
K1500	5.7L V8 F/I	63-1007-1 [2]	6.7 @ 4107
		57-3026 [1]	6.7 @ 4107
K1500 Suburban	5.7L V8 F/I	63-1007-1 [2]	6.7 @ 4107
		57-3026 [1]	6.7 @ 4107
K2500	5.7L V8 F/I	63-1007-1 [2]	6.7 @ 4107
		57-3026 [1]	6.7 @ 4107
K2500	7.4L V8 F/I	57-3027 [1]	7.4 @ 3571
1992 CHEVROLET			
K2500	7.4L V8 F/I - w/o heat stove	57-3014 [1]	17.6 @ 3811
K2500 Suburban	5.7L V8 F/I	63-1007-1 [2]	6.7 @ 4107
		57-3026 [1]	6.7 @ 4107
K2500 Suburban	7.4L V8 F/I	63-1007-1 [2]	6.7 @ 4107
		57-3027 [1]	7.4 @ 3571
K2500 Suburban	7.4L V8 F/I - w/o heat stove	57-3014 [1]	17.6 @ 3811
K3500	7.4L V8 F/I	57-3027 [1]	7.4 @ 3571
S10 Pickup	4.3L V6 TBI	57-3028 [1]	5.6 @ 3963
1991 CHEVROLET			
Blazer	5.7L V8 F/I	63-1007-1 [2]	6.7 @ 4107
C1500	5.0L V8 F/I	63-1007-1 [2]	6.7 @ 4107
		57-3026 [1]	6.7 @ 4107
C1500	5.7L V8 F/I	63-1007-1 [2]	6.7 @ 4107
		57-3026 [1]	6.7 @ 4107
C1500	7.4L V8 F/I	63-1007-1 [2]	6.7 @ 4107
		57-3027 [1]	7.4 @ 3571
C2500	5.7L V8 F/I	63-1007-1 [2]	6.7 @ 4107
		57-3026 [1]	6.7 @ 4107
C3500	7.4L V8 F/I	57-3027 [1]	7.4 @ 3571
K1500	5.0L V8 F/I	57-3026 [1]	6.7 @ 4107
		63-1007-1 [2]	6.7 @ 4107
K1500	5.7L V8 F/I	57-3026 [1]	6.7 @ 4107
		63-1007-1 [2]	6.7 @ 4107
K2500	5.7L V8 F/I	57-3026 [1]	6.7 @ 4107
		63-1007-1 [2]	6.7 @ 4107
S10 Blazer	4.3L V6 TBI	57-3028 [1]	5.6 @ 3963
S10 Pickup	4.3L V6 TBI	57-3028 [1]	5.6 @ 3963
V1500 Suburban	5.7L V8 F/I	63-1007-1 [2]	6.7 @ 4107
1990 CHEVROLET			
Blazer	5.7L V8 F/I	63-1007-1 [2]	6.7 @ 4107
C1500	5.0L V8 F/I	57-3026 [1]	6.7 @ 4107
		63-1007-1 [2]	6.7 @ 4107
C1500	5.7L V8 F/I	57-3026 [1]	6.7 @ 4107
		63-1007-1 [2]	6.7 @ 4107
C1500	7.4L V8 F/I	63-1007-1 [2]	6.7 @ 4107
C2500	5.7L V8 F/I	63-1007-1 [2]	6.7 @ 4107
		57-3026 [1]	6.7 @ 4107
C3500	7.4L V8 F/I	63-1007-1 [2]	6.7 @ 4107
		57-3027 [1]	7.4 @ 3571
K1500	5.0L V8 F/I	57-3026 [1]	6.7 @ 4107
		63-1007-1 [2]	6.7 @ 4107
K1500	5.7L V8 F/I	63-1007-1 [2]	6.7 @ 4107
		57-3026 [1]	6.7 @ 4107
K2500	5.7L V8 F/I	63-1007-1 [2]	6.7 @ 4107
		57-3026 [1]	6.7 @ 4107
K3500	7.4L V8 F/I	57-3027 [1]	7.4 @ 3571
R1500 Suburban	5.7L V8 F/I	63-1007-1 [2]	6.7 @ 4107
S10 Blazer	4.3L V6 TBI	57-3028 [1]	5.6 @ 3963
S10 Pickup	4.3L V6 TBI	57-3028 [1]	5.6 @ 3963
V1500 Suburban	5.7L V8 F/I	63-1007-1 [2]	6.7 @ 4107
1989 CHEVROLET			
Blazer	5.7L V8 F/I	63-1007-1 [2]	6.7 @ 4107
C1500	5.0L V8 F/I	63-1007-1 [2]	6.7 @ 4107
		57-3026 [1]	6.7 @ 4107
C1500	5.7L V8 F/I	63-1007-1 [2]	6.7 @ 4107
		57-3026 [1]	6.7 @ 4107

1) Street legal in all US states. 2) Street legal in most states, but not legal for use in California or other states with similar emission control regulations.
* Estimated horsepower gains are based on specific or similar vehicle dyno tests. Results will vary. See Page 479 for more information.
Partial Listing - Complete List of Vehicles and Applications at knfilters.com. See page 5 for information on intake tube materials/colors.

Vehicle	Engine Type	Intake Kit	Estimated Horsepower*
1989 CHEVROLET			
C2500	5.7L V8 F/I	63-1007-1 [2]	6.7 @ 4107
		57-3026 [1]	6.7 @ 4107
C3500	7.4L V8 F/I	57-3027 [1]	7.4 @ 3573
		63-1007-1 [2]	6.7 @ 4107
K1500	5.0L V8 F/I	63-1007-1 [2]	6.7 @ 4107
		57-3026 [1]	6.7 @ 4107
K1500	5.7L V8 F/I	63-1007-1 [2]	6.7 @ 4107
		57-3026 [1]	6.7 @ 4107
K2500	5.7L V8 F/I	63-1007-1 [2]	6.7 @ 4107
		57-3026 [1]	6.7 @ 4107
K3500	7.4L V8 F/I	57-3027 [1]	7.4 @ 3571
R1500 Suburban	5.7L V8 F/I	63-1007-1 [2]	6.7 @ 4107
S10 Blazer	4.3L V6 TBI	57-3028 [1]	5.6 @ 3963
S10 Pickup	4.3L V6 TBI	57-3028 [1]	5.6 @ 3963
V1500 Suburban	5.7L V8 F/I	63-1007-1 [2]	6.7 @ 4107
1988 CHEVROLET			
Blazer	5.7L V8 F/I	63-1007-1 [2]	6.7 @ 4107
C1500	5.0L V8 F/I	63-1007-1 [2]	6.7 @ 4107
		57-3026 [1]	6.7 @ 4107
C1500	5.7L V8 F/I	63-1007-1 [2]	6.7 @ 4107
		57-3026 [1]	6.7 @ 4107
C2500	5.7L V8 F/I	63-1007-1 [2]	6.7 @ 4107
		57-3026 [1]	6.7 @ 4107
C3500	7.4L V8 F/I	63-1007-1 [2]	6.7 @ 4107
		57-3027 [1]	7.4 @ 3571
K1500	5.0L V8 F/I	63-1007-1 [2]	6.7 @ 4107
		57-3026 [1]	6.7 @ 4107
K1500	5.7L V8 F/I	63-1007-1 [2]	6.7 @ 4107
		57-3026 [1]	6.7 @ 4107
K2500	5.7L V8 F/I	63-1007-1 [2]	6.7 @ 4107
		57-3026 [1]	6.7 @ 4107
S10 Blazer	4.3L V6 TBI	57-3028 [1]	5.6 @ 3963
S10 Pickup	4.3L V6 TBI	57-3028 [1]	5.6 @ 3963
2013 CHRYSLER			
300	3.6L V6 F/I	69-2544TP [2]	7.4 @ 5095
		63-1564 [2]	8.1 @ 5231
300	6.4L V8 F/I	69-2545TP [2]	22.2 @ 5216
		63-1565 [2]	22.0 @ 5216
300C	5.7L V8 F/I	69-2526TP [2]	11.7 @ 4854
		63-1114 [2]	11.8 @ 4513
2012 CHRYSLER			
300	3.6L V6 F/I	69-2544TP [2]	7.4 @ 5095
		63-1564 [2]	8.1 @ 5231
300	6.4L V8 F/I	69-2545TP [2]	22.2 @ 5216
		63-1565 [2]	22.0 @ 5216
300C	5.7L V8 F/I	69-2526TP [2]	11.7 @ 4854
		63-1114 [2]	11.8 @ 4513
2011 CHRYSLER			
300	3.6L V6 F/I	69-2544TP [2]	7.4 @ 5095
		63-1564 [2]	8.1 @ 5231
300C	5.7L V8 F/I	69-2526TP [2]	11.7 @ 4854
		63-1114 [2]	11.8 @ 4513
2010 CHRYSLER			
300	2.7L V6 F/I	57-1544 [1]	7.3 @ 5693
300	3.5L V6 F/I	57-1543 [1]	11.7 @ 6215
300C	5.7L V8 F/I	69-2526TP [1]	11.7 @ 4854
		57-1542 [1]	21.1 @ 5216
2010 CHRYSLER			
300C	6.1L V8 F/I	57-1542 [1]	21.1 @ 5216
		69-2526TP [1]	11.7 @ 4854
PT Cruiser	2.4L L4 F/I - exc. Turbo	63-1550 [2]	7.2 @ 5004
		57-1550 [1]	7.2 @ 5004
2009 CHRYSLER			
300	2.7L V6 F/I	57-1544 [1]	7.3 @ 5693
300	3.5L V6 F/I	57-1543 [1]	11.7 @ 6215
300C	5.7L V8 F/I	69-2526TP [1]	11.7 @ 4854
		57-1542 [1]	21.1 @ 5216
300C	6.1L V8 F/I	69-2526TP [1]	11.7 @ 4854
		57-1542 [1]	21.1 @ 5216
PT Cruiser	2.4L L4 F/I - exc. Turbo	63-1550 [2]	7.2 @ 5004
		57-1550 [1]	7.2 @ 5004
2008 CHRYSLER			
300	2.7L V6 F/I	57-1544 [1]	7.3 @ 5693
300	3.5L V6 F/I	57-1543 [1]	11.7 @ 6215
300C	5.7L V8 F/I	69-2526TP [1]	11.7 @ 4854
		57-1542 [1]	21.1 @ 5216
300C	6.1L V8 F/I	69-2526TP [1]	11.7 @ 4854
		57-1542 [1]	21.1 @ 5216
PT Cruiser	2.4L L4 F/I - exc. Turbo	63-1550 [2]	7.2 @ 5004
		57-1550 [1]	7.2 @ 5004
PT Cruiser	2.4L L4 F/I - Turbo	69-2541TP [1]	11.1 @ 4508
		63-1551 [2]	12.1 @ 5086
		69-2541TB [1]	11.1 @ 4508
		57-1551 [1]	12.1 @ 5086
2007 CHRYSLER			
300	2.7L V6 F/I	57-1544 [1]	7.3 @ 5693
300	3.5L V6 F/I	57-1543 [1]	11.7 @ 6215
300C	5.7L V8 F/I	69-2526TP [1]	11.7 @ 4854
		57-1542 [1]	21.1 @ 5216
300C	6.1L V8 F/I	69-2526TP [1]	11.7 @ 4854
		57-1542 [1]	21.1 @ 5216
Aspen	5.7L V8 F/I	77-1539KP [1]	15.6 @ 5148
		57-1539 [1]	17.5 @ 5053
PT Cruiser	2.4L L4 F/I - exc. Turbo	57-1550 [1]	7.2 @ 5004
PT Cruiser	2.4L L4 F/I - Turbo	69-2541TB [1]	11.1 @ 4508
		63-1551 [2]	12.1 @ 5086
		69-2541TP [1]	11.1 @ 4508
		57-1551 [1]	12.1 @ 5086
2006 CHRYSLER			
300	2.7L V6 F/I	57-1544 [1]	7.3 @ 5693
300	3.5L V6 F/I	57-1543 [1]	11.7 @ 6215
300C	5.7L V8 F/I	57-1542 [1]	21.1 @ 5216
		69-2526TP [1]	18.2 @ 5217
300C	6.1L V8 F/I	69-2526TP [1]	11.7 @ 4854
		57-1542 [1]	21.1 @ 5216
PT Cruiser	2.4L L4 F/I - exc. Turbo	57-1550 [1]	7.2 @ 5004
PT Cruiser	2.4L L4 F/I - Turbo	69-2541TB [1]	11.1 @ 4508
		69-2541TP [1]	11.1 @ 4508
		57-1551 [1]	12.1 @ 5086
2005 CHRYSLER			
300	2.7L V6 F/I	57-1544 [1]	7.3 @ 5693
300	3.5L V6 F/I	57-1543 [1]	11.7 @ 6215
300C	5.7L V8 F/I	69-2526TP [1]	11.7 @ 4854
		57-1542 [1]	21.1 @ 5216
300C	6.1L V8 F/I	69-2526TP [1]	11.7 @ 4854

1) Street legal in all US states. 2) Street legal in most states, but not legal for use in California or other states with similar emission control regulations.
* Estimated horsepower gains are based on specific or similar vehicle dyno tests. Results will vary. See Page 479 for more information.
Partial Listing - Complete List of Vehicles and Applications at knfilters.com. See page 5 for information on intake tube materials/colors.

Vehicle	Engine Type	Intake Kit	Estimated Horsepower*
2005 CHRYSLER			
300C	6.1L V8 F/I	57-1542 [1]	21.1 @ 5216
PT Cruiser	2.4L L4 F/I - exc. Turbo	57-1515-1 [1]	5.9 @ 5486
PT Cruiser	2.4L L4 F/I - Turbo	69-2541TB [1]	11.1 @ 4508
		57-1531 [1]	12.0 @ 5086
		69-2541TP [1]	11.1 @ 4508
2004 CHRYSLER			
300M	3.5L V6 F/I	57-1522 [1]	8.5 @ 5482
PT Cruiser	2.4L L4 F/I - exc. Turbo	57-1515-1 [1]	5.9 @ 5486
PT Cruiser	2.4L L4 F/I - Turbo	69-2541TP [1]	11.1 @ 4508
		57-1531 [1]	12.0 @ 5086
		69-2541TB [1]	11.1 @ 4508
2003 CHRYSLER			
300M	3.5L V6 F/I	57-1522 [1]	8.5 @ 5482
PT Cruiser	2.4L L4 F/I - exc. Turbo	57-1515-1 [1]	5.9 @ 5486
PT Cruiser	2.4L L4 F/I - Turbo	69-2541TB [1]	11.1 @ 4508
		57-1531 [1]	12.0 @ 5086
		69-2541TP [1]	11.1 @ 4508
2002 CHRYSLER			
300M	3.5L V6 F/I	57-1522 [1]	8.5 @ 5482
Neon	2.0L L4 F/I	69-2520TP [2]	5.3 @ 4641
Neon II	2.0L L4 F/I	69-2520TP [2]	5.3 @ 4641
		69-2520TR [2]	5.3 @ 4641
PT Cruiser	2.4L L4 F/I	57-1515-1 [1]	5.9 @ 5486
2001 CHRYSLER			
300M	3.5L V6 F/I	57-1522 [1]	8.5 @ 5482
Neon	2.0L L4 F/I	69-2520TP [2]	5.3 @ 4641
		69-2520TR [2]	5.3 @ 4641
Neon II	2.0L L4 F/I	69-2520TP [2]	5.3 @ 4641
		69-2520TR [2]	5.3 @ 4641
PT Cruiser	2.4L L4 F/I	57-1515-1 [1]	5.9 @ 5486
2000 CHRYSLER			
300M	3.5L V6 F/I	57-1522 [1]	8.5 @ 5482
Neon	2.0L L4 F/I	69-2520TP [2]	5.3 @ 4641
		69-2520TR [2]	5.3 @ 4641
Neon II	2.0L L4 F/I	69-2520TP [2]	5.3 @ 4641
		69-2520TR [2]	5.3 @ 4641
2008 CITROEN			
C4	2.0L L4 F/I - 177BHP	69-3002TS [2]	
2006 CITROEN			
C4	2.0L L4 F/I - 177BHP	69-3002TS [2]	
2013 DODGE			
Challenger	3.6L V6 F/I	69-2544TP [2]	7.4 @ 5095
		63-1564 [2]	8.1 @ 5231
Challenger	5.7L V8 F/I	69-2526TP [2]	11.7 @ 4854
		63-1114 [2]	11.8 @ 4513
Challenger	6.4L V8 F/I	69-2545TP [2]	22.2 @ 5216
		63-1565 [2]	22.0 @ 5216
Charger	3.6L V6 F/I	69-2544TP [2]	7.4 @ 5095
		63-1564 [2]	8.1 @ 5231
Charger	5.7L V8 F/I	69-2526TP [2]	11.7 @ 4854
		63-1114 [2]	11.8 @ 4513
Charger	6.4L V8 F/I	69-2545TP [2]	22.2 @ 5216
		63-1565 [2]	22.0 @ 5216
Durango	3.6L V6 F/I	77-1560KTK [2]	10.8 @ 5447
Durango	5.7L V8 F/I	77-1563KP [2]	15.0 @ 4500
2013 DODGE			
Durango	5.7L V8 F/I	63-1563 [2]	17.0 @ 4944
2012 DODGE			
Challenger	3.6L V6 F/I	69-2544TP [2]	7.4 @ 5095
		63-1564 [2]	8.1 @ 5231
Challenger	5.7L V8 F/I	69-2526TP [2]	11.7 @ 4854
		63-1114 [2]	11.8 @ 4513
Challenger	6.4L V8 F/I	69-2545TP [2]	22.2 @ 5216
		63-1565 [2]	22.0 @ 5216
Charger	3.6L V6 F/I	69-2544TP [2]	7.4 @ 5095
		63-1564 [2]	8.1 @ 5231
Charger	5.7L V8 F/I	69-2526TP [2]	11.7 @ 4854
		63-1114 [2]	11.8 @ 4513
Charger	6.4L V8 F/I	69-2545TP [2]	22.2 @ 5216
		63-1565 [2]	22.0 @ 5216
Durango	3.6L V6 F/I	77-1560KTK [2]	10.8 @ 5447
Durango	5.7L V8 F/I	63-1563 [2]	17.0 @ 4944
		77-1563KP [2]	15.0 @ 4500
Ram 1500 Pickup	4.7L V8 F/I	63-1529 [2]	8.6 @ 4688
		77-1529KP [2]	6.8 @ 4743
Ram 1500 Pickup	5.7L V8 F/I	63-1561 [2]	15.7 @ 4688
		77-1561KP [2]	10.3 @ 4382
Ram 2500 Pickup	6.7L L6 DSL	63-1562 [2]	8.2 @ 2919
Ram 3500 Pickup	6.7L L6 DSL	63-1562 [2]	8.2 @ 2919
2011 DODGE			
Challenger	3.6L V6 F/I	63-1564 [2]	8.1 @ 5231
		69-2544TP [2]	7.4 @ 5095
Challenger	5.7L V8 F/I	63-1114 [2]	11.8 @ 4513
		69-2526TP [2]	11.7 @ 4854
Challenger	6.4L V8 F/I	69-2545TP [2]	22.2 @ 5216
		63-1565 [2]	22.0 @ 5216
Charger	3.6L V6 F/I	63-1564 [2]	8.1 @ 5231
		69-2544TP [2]	7.4 @ 5095
Charger	5.7L V8 F/I	63-1114 [2]	11.8 @ 4513
		69-2526TP [2]	11.7 @ 4854
Durango	3.6L V6 F/I	77-1560KTK [2]	10.8 @ 5447
Durango	5.7L V8 F/I	77-1563KP [2]	15.0 @ 4500
		63-1563 [2]	17.0 @ 4944
Nitro	3.7L V6 F/I	77-1562KTK [2]	9.2 @ 4876
Nitro	4.0L V6 F/I	63-1556 [2]	8.7 @ 5006
Ram 1500 Pickup	3.7L V6 F/I	63-1537 [2]	7.4 @ 5223
Ram 1500 Pickup	4.7L V8 F/I	63-1529 [2]	10.8 @ 4695
		77-1529KP [2]	6.8 @ 4743
Ram 1500 Pickup	5.7L V8 F/I	63-1561 [2]	15.7 @ 4688
		77-1561KP [2]	10.3 @ 4382
Ram 2500 Pickup	6.7L L6 DSL	63-1562 [2]	8.2 @ 2919
Ram 3500 Pickup	6.7L L6 DSL	63-1562 [2]	8.2 @ 2919
2010 DODGE			
Avenger	2.4L L4 F/I	69-2542TS [2]	9.4 @ 5969
Avenger	3.5L V6 F/I	69-2543TTK [1]	12.3 @ 5493
Caliber	1.8L L4 F/I	57-1552 [1]	7.9 @ 4557
Caliber	2.0L L4 F/I	57-1552 [1]	7.9 @ 4557
Caliber	2.4L L4 F/I	57-1552 [1]	7.9 @ 4557
Challenger	3.5L V6 F/I	57-1543 [1]	11.7 @ 6215
Challenger	5.7L V8 F/I	57-1542 [1]	21.1 @ 5216
		69-2526TP [1]	11.7 @ 4854
Challenger	6.1L V8 F/I	57-1542 [1]	21.1 @ 5216
		69-2526TP [1]	11.7 @ 4854
Charger	2.7L V6 F/I	57-1544 [1]	7.3 @ 5693

1) Street legal in all US states. 2) Street legal in most states, but not legal for use in California or other states with similar emission control regulations.
* Estimated horsepower gains are based on specific or similar vehicle dyno tests. Results will vary. See Page 479 for more information.
Partial Listing - Complete List of Vehicles and Applications at knfilters.com. See page 5 for information on intake tube materials/colors.

Vehicle	Engine Type	Intake Kit	Estimated Horsepower*
2010 DODGE			
Charger	3.5L V6 F/I	57-1543 [1]	11.7 @ 6215
Charger	5.7L V8 F/I	57-1542 [1]	21.1 @ 5216
		69-2526TP [1]	11.7 @ 4854
Charger	6.1L V8 F/I	57-1542 [1]	21.1 @ 5216
		69-2526TP [1]	11.7 @ 4854
Dakota	4.7L V8 F/I	57-1546 [1]	9.2 @ 4524
		77-1546KP [1]	7.3 @ 4475
Nitro	3.7L V6 F/I	77-1562KTK [2]	9.2 @ 4876
Nitro	4.0L V6 F/I	63-1556 [2]	8.7 @ 5006
		57-1556 [1]	8.7 @ 5006
Ram 1500 Pickup	3.7L V6 F/I	57-1537 [1]	7.4 @ 5223
Ram 1500 Pickup	4.7L V8 F/I	77-1529KP [2]	6.8 @ 4743
		63-1529 [2]	8.6 @ 4688
Ram 1500 Pickup	5.7L V8 F/I	63-1561 [2]	15.7 @ 4688
		77-1561KP [2]	10.3 @ 4382
Ram 2500 Pickup	6.7L L6 DSL	63-1562 [2]	8.2 @ 2919
Ram 3500 Pickup	6.7L L6 DSL	63-1562 [2]	8.2 @ 2919
Viper	8.4L V10 F/I	69-2527TTR [2]	18.7 @ 5300
2009 DODGE			
Avenger	2.4L L4 F/I	69-2542TS [2]	9.4 @ 5969
Avenger	3.5L V6 F/I	69-2543TTK [1]	12.3 @ 5493
Caliber	1.8L L4 F/I	57-1552 [1]	7.9 @ 4557
Caliber	2.0L L4 F/I	57-1552 [1]	7.9 @ 4557
Caliber	2.4L L4 F/I	57-1552 [1]	7.9 @ 4557
Caliber SRT-4	2.4L L4 F/I	63-1560 [2]	10.9 @ 5500
		57-1560 [1]	10.9 @ 5500
Challenger	3.5L V6 F/I	57-1543 [1]	11.7 @ 6215
Challenger	5.7L V8 F/I	69-2526TP [1]	11.7 @ 4854
		57-1542 [1]	21.1 @ 5216
Challenger	6.1L V8 F/I	69-2526TP [1]	11.7 @ 4854
		57-1542 [1]	21.1 @ 5216
Charger	2.7L V6 F/I	57-1544 [1]	7.3 @ 5693
Charger	3.5L V6 F/I	57-1543 [1]	11.7 @ 6215
Charger	5.7L V8 F/I	69-2526TP [1]	11.7 @ 4854
		57-1542 [1]	21.1 @ 5216
Charger	6.1L V8 F/I	69-2526TP [1]	11.7 @ 4854
		57-1542 [1]	21.1 @ 5216
Dakota	4.7L V8 F/I	77-1546KP [1]	7.3 @ 4475
		57-1546 [1]	9.2 @ 4524
Durango	4.7L V8 F/I	77-1538KP [1]	8.9 @ 4406
		57-1538 [1]	16.8 @ 4588
Durango	5.7L V8 F/I	77-1539KP [2]	15.6 @ 5148
		63-1094 [2]	17.5 @ 5053
Nitro	4.0L V6 F/I	63-1556 [2]	8.7 @ 5006
		57-1556 [1]	8.7 @ 5006
Ram 1500 Pickup	3.7L V6 F/I	57-1537 [1]	7.4 @ 5223
Ram 1500 Pickup	4.7L V8 F/I	63-1529 [2]	8.6 @ 4688
		77-1529KP [2]	6.8 @ 4743
Ram 1500 Pickup	5.7L V8 F/I	63-1561 [2]	15.7 @ 4688
		77-1561KP [2]	10.3 @ 4382
Ram 2500 Pickup	6.7L L6 DSL	57-1557 [1]	20.6 @ 2500
Ram 3500 Pickup	6.7L L6 DSL	57-1557 [1]	20.6 @ 2500
Viper	8.4L V10 F/I	69-2527TTR [2]	18.7 @ 5300
2008 DODGE			
Avenger	2.4L L4 F/I	69-2542TS [2]	9.4 @ 5369
Avenger	3.5L V6 F/I	69-2543TTK [1]	12.3 @ 5493
Caliber	1.8L L4 F/I	57-1552 [1]	7.9 @ 4557
Caliber	2.0L L4 F/I	57-1552 [1]	7.9 @ 4557
Caliber	2.4L L4 F/I	57-1552 [1]	7.9 @ 4557
Caliber SRT-4	2.4L L4 F/I	57-1560 [1]	10.9 @ 5500
		63-1560 [2]	10.9 @ 5500
Challenger	6.1L V8 F/I	57-1542 [1]	31.4 @ 5217
		69-2526TP [1]	11.7 @ 4854
Charger	2.7L V6 F/I	57-1544 [1]	7.3 @ 5693
Charger	3.5L V6 F/I	57-1543 [1]	11.7 @ 6215
Charger	5.7L V8 F/I	57-1542 [1]	21.1 @ 5216
		69-2526TP [1]	11.7 @ 4854
Charger	6.1L V8 F/I	57-1542 [1]	21.1 @ 5216
		69-2526TP [1]	11.7 @ 4854
Dakota	3.7L V6 F/I	57-1558 [1]	9.2 @ 4200
		77-1558KP [1]	6.1 @ 4200
Dakota	4.7L V8 F/I	57-1546 [1]	9.2 @ 4524
		77-1546KP [1]	7.3 @ 4475
Durango	4.7L V8 F/I	57-1538 [1]	16.8 @ 4588
		77-1538KP [1]	8.9 @ 4406
Durango	5.7L V8 F/I	57-1539 [1]	17.5 @ 5053
		77-1539KP [1]	15.6 @ 5148
Magnum	2.7L V6 F/I	57-1544 [1]	7.3 @ 5693
Magnum	3.5L V6 F/I	57-1543 [1]	11.7 @ 6215
Magnum	5.7L V8 F/I	57-1542 [1]	21.1 @ 5216
		69-2526TP [1]	11.7 @ 4854
Magnum	6.1L V8 F/I	57-1542 [1]	21.1 @ 5216
		69-2526TP [1]	11.7 @ 4854
Nitro	3.7L V6 F/I	57-1554 [1]	11.7 @ 4270
		77-1554KP [1]	11.6 @ 4270
Nitro	4.0L V6 F/I	57-1556 [1]	8.7 @ 5006
		63-1556 [2]	8.7 @ 5006
Ram 1500 Pickup	3.7L V6 F/I	57-1537 [1]	7.4 @ 5223
Ram 1500 Pickup	4.7L V8 F/I	77-1529KP [2]	6.8 @ 4743
		63-1529 [2]	8.6 @ 4688
Ram 1500 Pickup	5.7L V8 F/I	77-1533KP [1]	8.3 @ 5391
		57-1533 [1]	10.5 @ 5445
Ram 2500 Pickup	5.7L V8 F/I	77-1533KP [1]	8.3 @ 5391
		57-1533 [1]	10.5 @ 5445
Ram 2500 Pickup	6.7L L6 DSL	57-1557 [1]	20.6 @ 2500
Ram 3500 Pickup	5.7L V8 F/I	57-1533 [1]	10.5 @ 5445
		77-1533KP [1]	8.3 @ 5391
Ram 3500 Pickup	6.7L L6 DSL	57-1557 [1]	20.6 @ 2500
Viper	8.4L V10 F/I	69-2527TTR [2]	18.7 @ 5300
2007 DODGE			
Caliber	1.8L L4 F/I	57-1552 [1]	7.9 @ 4557
Caliber	2.0L L4 F/I	57-1552 [1]	7.9 @ 4557
Caliber	2.4L L4 F/I	57-1552 [1]	7.9 @ 4557
Charger	2.7L V6 F/I	57-1544 [1]	7.3 @ 5693
Charger	3.5L V6 F/I	57-1543 [1]	11.7 @ 6215
Charger	5.7L V8 F/I	69-2526TP [1]	11.7 @ 4854
		57-1542 [1]	21.1 @ 5216
Charger	6.1L V8 F/I	69-2526TP [1]	11.7 @ 4854
		57-1542 [1]	21.1 @ 5216
Dakota	3.7L V6 F/I	77-1558KP [1]	6.1 @ 4200
		57-1558 [1]	9.2 @ 4200
Dakota	4.7L V8 F/I	77-1546KP [1]	7.3 @ 4475
		57-1546 [1]	9.2 @ 4524
Durango	4.7L V8 F/I	77-1538KP [1]	8.9 @ 4406
		57-1538 [1]	16.8 @ 4588
Durango	5.7L V8 F/I	77-1539KP [1]	15.6 @ 5148

1) Street legal in all US states. 2) Street legal in most states, but not legal for use in California or other states with similar emission control regulations.
* Estimated horsepower gains are based on specific or similar vehicle dyno tests. Results will vary. See Page 479 for more information.
Partial Listing - Complete List of Vehicles and Applications at knfilters.com. See page 5 for information on intake tube materials/colors.

AIR INTAKE SYSTEMS

Vehicle	Engine Type	Intake Kit	Estimated Horsepower*
2007 DODGE			
Durango	5.7L V8 F/I	57-1539 [1]	17.5 @ 5053
Magnum	2.7L V6 F/I	57-1544 [1]	7.3 @ 5693
Magnum	3.5L V6 F/I	57-1543 [1]	11.7 @ 6215
Magnum	5.7L V8 F/I	69-2526TP [1]	11.7 @ 4854
		57-1542 [1]	21.1 @ 5216
Magnum	6.1L V8 F/I	69-2526TP [1]	11.7 @ 4854
		57-1542 [1]	21.1 @ 5216
Nitro	3.7L V6 F/I	77-1554KP [1]	11.6 @ 4270
		57-1554 [1]	11.7 @ 4270
Nitro	4.0L V6 F/I	63-1556 [2]	8.7 @ 5006
		57-1556 [1]	8.7 @ 5006
Ram 1500 Pickup	3.7L V6 F/I	57-1537 [1]	7.4 @ 5223
Ram 1500 Pickup	4.7L V8 F/I	77-1529KP [1]	6.8 @ 4743
		57-1529 [1]	8.6 @ 4688
Ram 1500 Pickup	5.7L V8 F/I	77-1533KP [1]	8.3 @ 5391
		57-1533 [1]	10.5 @ 5445
Ram 2500 Pickup	5.7L V8 F/I	77-1533KP [1]	8.3 @ 5391
		57-1533 [1]	10.5 @ 5445
Ram 2500 Pickup	5.9L L6 DSL	57-1532 [1]	11.0 @ 2852
Ram 2500 Pickup	6.7L L6 DSL	57-1557 [1]	20.6 @ 2500
Ram 3500 Pickup	5.7L V8 F/I	57-1533 [1]	10.5 @ 5445
		77-1533KP [1]	8.3 @ 5391
Ram 3500 Pickup	5.9L L6 DSL	57-1532 [1]	11.0 @ 2852
Ram 3500 Pickup	6.7L L6 DSL	57-1557 [1]	20.6 @ 2500
2006 DODGE			
Charger	2.7L V6 F/I	57-1544 [1]	7.3 @ 5693
Charger	3.5L V6 F/I	57-1543 [1]	11.7 @ 6215
Charger	5.7L V8 F/I	57-1542 [1]	21.1 @ 5216
		69-2526TP [1]	11.7 @ 4854
Charger	6.1L V8 F/I	57-1542 [1]	21.1 @ 5216
		69-2526TP [1]	11.7 @ 4854
Dakota	3.7L V6 F/I	57-1547 [1]	8.7 @ 4749
		77-1547KP [1]	6.0 @ 4943
Dakota	4.7L V8 F/I	57-1546 [1]	9.2 @ 4524
		77-1546KP [1]	7.3 @ 4475
Durango	4.7L V8 F/I	77-1538KP [1]	8.9 @ 4406
		57-1538 [1]	16.8 @ 4588
Durango	5.7L V8 F/I	77-1539KP [1]	15.6 @ 5148
		57-1539 [1]	17.5 @ 5053
Magnum	2.7L V6 F/I	57-1544 [1]	7.3 @ 5693
Magnum	3.5L V6 F/I	57-1543 [1]	11.7 @ 6215
Magnum	5.7L V8 F/I	69-2526TP [1]	11.7 @ 4854
		57-1542 [1]	21.1 @ 5216
Magnum	6.1L V8 F/I	69-2526TP [1]	11.7 @ 4854
		57-1542 [1]	21.1 @ 5216
Ram 1500 Pickup	3.7L V6 F/I	57-1537 [1]	7.4 @ 5223
Ram 1500 Pickup	4.7L V8 F/I	77-1529KP [1]	6.8 @ 4743
		57-1529 [1]	8.6 @ 4688
Ram 1500 Pickup	5.7L V8 F/I	77-1533KP [1]	8.3 @ 5391
		57-1533 [1]	10.5 @ 5445
Ram 2500 Pickup	5.7L V8 F/I	77-1533KP [1]	8.3 @ 5391
		57-1533 [1]	10.5 @ 5445
Ram 2500 Pickup	5.9L L6 DSL	57-1532 [1]	11.0 @ 2852
Ram 3500 Pickup	5.7L V8 F/I	77-1533KP [1]	8.3 @ 5391
		57-1533 [1]	10.5 @ 5445
Ram 3500 Pickup	5.9L L6 DSL	57-1532 [1]	11.0 @ 2852
Ram SRT-10	8.3L V10 F/I	57-1541 [1]	19.8 @ 4867
Viper	8.3L V10 F/I	57-1536 [1]	14.1 @ 5300
2005 DODGE			
Dakota	3.7L V6 F/I	77-1547KP [1]	6.0 @ 4943
		57-1547 [1]	8.7 @ 4749
Dakota	4.7L V8 F/I	77-1546KP [1]	7.3 @ 4475
		57-1546 [1]	9.2 @ 4524
Durango	4.7L V8 F/I	77-1538KP [1]	8.9 @ 4406
		57-1538 [1]	16.8 @ 4588
Durango	5.7L V8 F/I	77-1539KP [1]	15.6 @ 5148
		57-1539 [1]	17.5 @ 5053
Magnum	2.7L V6 F/I	57-1544 [1]	7.3 @ 5693
Magnum	3.5L V6 F/I	57-1543 [1]	11.7 @ 6214
Magnum	5.7L V8 F/I	69-2526TP [1]	11.7 @ 4854
		57-1542 [1]	21.1 @ 5216
Neon	2.0L L4 F/I	69-2520TR [2]	5.3 @ 4641
		69-2520TP [2]	5.3 @ 4641
		63-1534 [2]	4.9 @ 5600
		57-1534 [1]	4.9 @ 5600
Neon SRT-4	2.4L L4 F/I	69-2521TP [2]	12.2 @ 5312
		69-2521TB [2]	12.2 @ 5312
		57-1535 [1]	9.8 @ 5500
Ram 1500 Pickup	3.7L V6 F/I	57-1537 [1]	7.4 @ 5223
Ram 1500 Pickup	4.7L V8 F/I	77-1529KP [1]	6.8 @ 4743
		57-1529 [1]	8.6 @ 4688
Ram 1500 Pickup	5.7L V8 F/I	77-1533KP [1]	8.3 @ 5391
		57-1533 [1]	10.5 @ 5445
Ram 2500 Pickup	5.7L V8 F/I	77-1533KP [1]	8.3 @ 5391
		57-1533 [1]	10.5 @ 5445
Ram 2500 Pickup	5.9L L6 DSL	57-1532 [1]	11.0 @ 2852
Ram 3500 Pickup	5.7L V8 F/I	77-1533KP [1]	8.3 @ 5391
		57-1533 [1]	10.5 @ 5445
Ram 3500 Pickup	5.9L L6 DSL	57-1532 [1]	11.0 @ 2852
Ram SRT-10	8.3L V10 F/I	57-1541 [1]	19.8 @ 4867
Viper	8.3L V10 F/I	57-1536 [1]	14.1 @ 5300
2004 DODGE			
Dakota	4.7L V8 F/I	77-1516KP [1]	7.7 @ 4722
		57-1516 [1]	8.0 @ 4470
Durango	4.7L V8 F/I	77-1538KP [1]	8.9 @ 4406
		57-1538 [1]	16.8 @ 4588
Durango	5.7L V8 F/I	77-1539KP [1]	15.6 @ 5148
		57-1539 [1]	17.5 @ 5053
Intrepid	2.7L V6 F/I	57-1523 [1]	4.5 @ 5939
Intrepid SXT	3.5L V6 F/I	57-1522 [1]	8.5 @ 5482
Neon	2.0L L4 F/I	69-2520TR [1]	5.3 @ 4641
		69-2520TP [1]	5.3 @ 4641
		57-1534 [1]	4.9 @ 5600
Neon SRT-4	2.4L L4 F/I	69-2521TP [1]	12.2 @ 5312
		69-2521TB [1]	12.2 @ 5312
		57-1535 [1]	9.8 @ 5500
Ram 1500 Pickup	3.7L V6 F/I	57-1537 [1]	7.4 @ 5223
Ram 1500 Pickup	4.7L V8 F/I	77-1529KP [1]	6.8 @ 4743
		57-1529 [1]	8.6 @ 4688
Ram 1500 Pickup	5.7L V8 F/I	77-1533KP [1]	8.3 @ 5391
		57-1533 [1]	10.5 @ 5445
Ram 2500 Pickup	5.7L V8 F/I	77-1533KP [1]	8.3 @ 5391
		57-1533 [1]	10.5 @ 5445
Ram 2500 Pickup	5.9L L6 DSL	57-1532 [1]	11.0 @ 2852
Ram 3500 Pickup	5.7L V8 F/I	77-1533KP [1]	8.3 @ 5391
		57-1533 [1]	10.5 @ 5445
Ram 3500 Pickup	5.9L L6 DSL	57-1532 [1]	11.0 @ 2852

1) Street legal in all US states. 2) Street legal in most states, but not legal for use in California or other states with similar emission control regulations.
* Estimated horsepower gains are based on specific or similar vehicle dyno tests. Results will vary. See Page 479 for more information.
Partial Listing - Complete List of Vehicles and Applications at knfilters.com. See page 5 for information on intake tube materials/colors.

Vehicle	Engine Type	Intake Kit	Estimated Horsepower*
2004 DODGE			
Ram SRT-10	8.3L V10 F/I	57-1541 [1]	19.8 @ 4867
Viper	8.3L V10 F/I	57-1536 [1]	14.1 @ 5300
2003 DODGE			
Dakota	4.7L V8 F/I	77-1516KP [1]	7.7 @ 4722
		57-1516 [1]	8.0 @ 4470
Dakota	5.9L V8 F/I	57-1517-2 [1]	11.7 @ 4553
Durango	4.7L V8 F/I	77-1516KP [1]	7.7 @ 4722
		57-1516 [1]	8.0 @ 4470
Durango	5.9L V8 F/I	57-1517-2 [1]	11.7 @ 4553
Intrepid	2.7L V6 F/I	57-1523 [1]	4.5 @ 5939
Intrepid	3.5L V6 F/I	57-1522 [1]	8.5 @ 5482
Neon	2.0L L4 F/I	69-2520TR [1]	5.3 @ 4641
		69-2520TP [1]	5.3 @ 4641
		57-1534 [1]	4.9 @ 5600
Neon R/T	2.0L L4 F/I	69-2520TR [1]	5.3 @ 4641
		69-2520TP [1]	5.3 @ 4641
		57-1534 [1]	4.9 @ 5600
Neon SRT-4	2.4L L4 F/I	69-2521TP [1]	12.2 @ 5312
		69-2521TB [1]	12.2 @ 5312
		57-1535 [1]	9.8 @ 5500
Ram 1500 Pickup	3.7L V6 F/I	57-1537 [1]	7.4 @ 5223
Ram 1500 Pickup	4.7L V8 F/I	77-1529KP [1]	6.8 @ 4743
		57-1529 [1]	8.6 @ 4688
Ram 1500 Pickup	5.7L V8 F/I	77-1533KP [1]	8.3 @ 5391
		57-1533 [1]	10.5 @ 5445
Ram 1500 Pickup	5.9L V8 F/I	57-1530-1 [1]	8.7 @ 4362
Ram 2500 Pickup	5.7L V8 F/I	77-1533KP [1]	8.3 @ 5391
		57-1533 [1]	10.5 @ 5445
Ram 2500 Pickup	5.9L L6 DSL	57-1532 [1]	11.0 @ 2852
Ram 3500 Pickup	5.7L V8 F/I	77-1533KP [1]	8.3 @ 5391
		57-1533 [1]	10.5 @ 5445
Ram 3500 Pickup	5.9L L6 DSL	57-1532 [1]	11.0 @ 2852
Viper	8.3L V10 F/I	57-1536 [1]	14.1 @ 5300
2002 DODGE			
Dakota	4.7L V8 F/I	77-1516KP [1]	7.7 @ 4722
		57-1516 [1]	8.0 @ 4470
Dakota	5.9L V8 F/I	57-1517-2 [1]	11.7 @ 4553
Durango	4.7L V8 F/I	77-1516KP [1]	7.7 @ 4722
		57-1516 [1]	8.0 @ 4470
Durango	5.9L V8 F/I	57-1517-2 [1]	11.7 @ 4553
Intrepid	2.7L V6 F/I	57-1523 [1]	4.5 @ 5939
Intrepid	3.5L V6 F/I	57-1522 [1]	8.5 @ 5482
Neon	2.0L L4 F/I	69-2520TR [1]	5.3 @ 4641
		69-2520TP [1]	5.3 @ 4641
		57-1534 [1]	4.9 @ 5600
Neon ACR	2.0L L4 F/I	69-2520TR [1]	5.3 @ 4641
		69-2520TP [1]	5.3 @ 4641
		57-1534 [1]	4.9 @ 5600
Neon R/T	2.0L L4 F/I	69-2520TR [1]	5.3 @ 4641
		69-2520TP [1]	5.3 @ 4641
		57-1534 [1]	4.9 @ 5600
Ram 1500 Pickup	3.7L V6 F/I	57-1537 [1]	7.4 @ 5223
Ram 1500 Pickup	4.7L V8 F/I	77-1529KP [1]	6.8 @ 4743
		57-1529 [1]	8.6 @ 4688
Ram 1500 Pickup	5.9L V8 F/I	57-1530-1 [1]	8.7 @ 4362
Ram 2500 Pickup	5.9L L6 DSL	57-1525 [1]	9.2 @ 2560
Ram 2500 Pickup	5.9L V8 F/I	57-1511-2 [1]	11.8 @ 4248
Ram 2500 Pickup	8.0L V10 F/I	57-1507 [1]	15.8 @ 4128
2002 DODGE			
Ram 3500 Pickup	5.9L L6 DSL	57-1525 [1]	9.2 @ 2560
Ram 3500 Pickup	8.0L V10 F/I	57-1507 [1]	15.8 @ 4128
2001 DODGE			
Dakota	4.7L V8 F/I	77-1516KP [1]	7.7 @ 4722
		57-1516 [1]	8.0 @ 4470
Dakota	5.9L V8 F/I	57-1517-2 [1]	11.7 @ 4553
Durango	4.7L V8 F/I	77-1516KP [1]	7.7 @ 4722
		57-1516 [1]	8.0 @ 4470
Durango	5.9L V8 F/I	57-1517-2 [1]	11.7 @ 4553
Intrepid	2.7L V6 F/I	57-1523 [1]	4.5 @ 5939
Intrepid	3.5L V6 F/I	57-1522 [1]	8.5 @ 5482
Neon	2.0L L4 F/I	69-2520TR [1]	5.3 @ 4641
		69-2520TP [1]	5.3 @ 4641
		57-1534 [1]	4.9 @ 5600
Neon ACR	2.0L L4 F/I	69-2520TR [1]	5.3 @ 4641
		69-2520TP [1]	5.3 @ 4641
		57-1534 [1]	4.9 @ 5600
Neon R/T	2.0L L4 F/I	69-2520TR [1]	5.3 @ 4641
		69-2520TP [1]	5.3 @ 4641
		57-1534 [1]	4.9 @ 5600
Ram 1500 Pickup	3.9L V6 F/I	57-1527-1 [1]	5.3 @ 3884
Ram 1500 Pickup	5.2L V8 F/I	57-1511-2 [1]	11.8 @ 4248
Ram 1500 Pickup	5.9L V8 F/I	57-1511-2 [1]	11.8 @ 4248
Ram 2500 Pickup	5.9L L6 DSL	57-1525 [1]	9.2 @ 2560
Ram 2500 Pickup	5.9L V8 F/I	57-1511-2 [1]	11.8 @ 4248
Ram 2500 Pickup	8.0L V10 F/I	57-1507 [1]	15.8 @ 4128
Ram 3500 Pickup	5.9L L6 DSL	57-1525 [1]	9.2 @ 2560
Ram 3500 Pickup	8.0L V10 F/I	57-1507 [1]	15.8 @ 4128
2000 DODGE			
Avenger	2.5L V6 F/I	57-1524 [1]	4.3 @ 5576
Dakota	4.7L V8 F/I	77-1516KP [1]	7.7 @ 4722
		57-1516 [1]	8.0 @ 4470
Dakota	5.9L V8 F/I	57-1517-2 [1]	11.7 @ 4553
Durango	4.7L V8 F/I	77-1516KP [1]	7.7 @ 4722
		57-1516 [1]	8.0 @ 4470
Durango	5.2L V8 F/I	57-1517-2 [1]	11.7 @ 4553
Durango	5.9L V8 F/I	57-1517-2 [1]	11.7 @ 4553
Intrepid	2.7L V6 F/I	57-1523 [1]	4.5 @ 5939
Intrepid	3.5L V6 F/I	57-1522 [1]	8.5 @ 5482
Neon	2.0L L4 F/I	69-2520TR [1]	5.3 @ 4641
		69-2520TP [1]	5.3 @ 4641
		57-1534 [1]	4.9 @ 5600
Ram 1500 Pickup	3.9L V6 F/I	57-1527-1 [1]	5.3 @ 3884
		57-1503-1 [1]	
Ram 1500 Pickup	5.2L V8 F/I	57-1511-2 [1]	11.8 @ 4248
Ram 1500 Pickup	5.9L V8 F/I	57-1511-2 [1]	11.8 @ 4248
Ram 2500 Pickup	5.9L L6 DSL	57-1525 [1]	9.2 @ 2560
Ram 2500 Pickup	5.9L V8 F/I	57-1511-2 [1]	11.8 @ 4248
Ram 2500 Pickup	8.0L V10 F/I	57-1507 [1]	15.8 @ 4128
Ram 3500 Pickup	5.9L L6 DSL	57-1525 [1]	9.2 @ 2560
Ram 3500 Pickup	8.0L V10 F/I	57-1507 [1]	15.8 @ 4128
1999 DODGE			
Avenger	2.5L V6 F/I	57-1524 [1]	4.3 @ 5576
Dakota	5.2L V8 F/I	57-1509-1 [1]	10.7 @ 4580
Dakota	5.9L V8 F/I	57-1509-1 [1]	10.7 @ 4580
Durango	5.2L V8 F/I	57-1509-1 [1]	10.7 @ 4580
Durango	5.9L V8 F/I	57-1509-1 [1]	10.7 @ 4580
Intrepid	2.7L V6 F/I	57-1523 [1]	4.5 @ 5939

1) Street legal in all US states. 2) Street legal in most states, but not legal for use in California or other states with similar emission control regulations.
* Estimated horsepower gains are based on specific or similar vehicle dyno tests. Results will vary. See Page 479 for more information.
Partial Listing - Complete List of Vehicles and Applications at knfilters.com. See page 5 for information on intake tube materials/colors.

AIR INTAKE SYSTEMS

Vehicle	Engine Type	Intake Kit	Estimated Horsepower*
1999 DODGE			
Neon	2.0L L4 F/I - SOHC	57-1512 [1]	6.0 @ 5810
Ram 1500 Pickup	3.9L V6 F/I	57-1527-1 [1]	5.3 @ 3884
		57-1503-1 [1]	
Ram 1500 Pickup	5.2L V8 F/I	57-1511-2 [1]	11.8 @ 4248
Ram 1500 Pickup	5.9L V8 F/I	57-1511-2 [1]	11.8 @ 4248
Ram 2500 Pickup	5.9L L6 DSL	57-1525 [1]	9.2 @ 2560
Ram 2500 Pickup	5.9L V8 F/I	57-1511-2 [1]	11.8 @ 4248
Ram 2500 Pickup	8.0L V10 F/I	57-1507 [1]	15.8 @ 4128
Ram 3500 Pickup	5.9L L6 DSL	57-1525 [1]	9.2 @ 2560
Ram 3500 Pickup	8.0L V10 F/I	57-1507 [1]	15.8 @ 4128
1998 DODGE			
Avenger	2.5L V6 F/I	57-1524 [1]	4.3 @ 5576
Dakota	5.2L V8 F/I	57-1509-1 [1]	10.7 @ 4580
Dakota	5.9L V8 F/I	57-1509-1 [1]	10.7 @ 4580
Durango	5.2L V8 F/I	57-1509-1 [1]	10.7 @ 4580
Durango	5.9L V8 F/I	57-1509-1 [1]	10.7 @ 4580
Intrepid	2.7L V6 F/I	57-1523 [1]	4.5 @ 5939
Neon	2.0L L4 F/I - SOHC	57-1512 [1]	6.0 @ 5810
Ram 1500 Pickup	3.9L V6 F/I	57-1527-1 [1]	5.3 @ 3884
		57-1503-1 [1]	
Ram 1500 Pickup	5.2L V8 F/I	57-1511-2 [1]	11.8 @ 4248
Ram 1500 Pickup	5.9L V8 F/I	57-1511-2 [1]	11.8 @ 4248
Ram 2500 Pickup	5.2L V8 F/I	57-1511-2 [1]	11.8 @ 4248
Ram 2500 Pickup	5.9L L6 DSL	57-1525 [1]	9.2 @ 2560
Ram 2500 Pickup	5.9L V8 F/I	57-1511-2 [1]	11.8 @ 4248
Ram 2500 Pickup	8.0L V10 F/I	57-1507 [1]	15.8 @ 4128
Ram 3500 Pickup	5.9L L6 DSL	57-1525 [1]	9.2 @ 2560
Ram 3500 Pickup	8.0L V10 F/I	57-1507 [1]	15.8 @ 4128
Viper	8.0L V10 F/I	57-1508 [1]	13.4 @ 5363
1997 DODGE			
Dakota	5.2L V8 F/I	57-1509-1 [1]	10.7 @ 4580
Neon	2.0L L4 F/I - SOHC	57-1512 [1]	6.0 @ 5810
Ram 1500 Pickup	3.9L V6 F/I	57-1527-1 [1]	5.3 @ 3884
		57-1503-1 [1]	
Ram 1500 Pickup	5.2L V8 F/I	57-1511-2 [1]	11.8 @ 4248
Ram 1500 Pickup	5.9L V8 F/I	57-1511-2 [1]	11.8 @ 4248
Ram 2500 Pickup	5.9L L6 DSL	57-1525 [1]	9.2 @ 2560
Ram 2500 Pickup	5.9L V8 F/I	57-1511-2 [1]	11.8 @ 4248
Ram 2500 Pickup	8.0L V10 F/I	57-1507 [1]	15.8 @ 4128
Ram 3500 Pickup	5.9L L6 DSL	57-1525 [1]	9.2 @ 2560
Ram 3500 Pickup	8.0L V10 F/I	57-1507 [1]	15.8 @ 4128
Viper	8.0L V10 F/I	57-1508 [1]	13.4 @ 5363
1996 DODGE			
Dakota	3.9L V6 F/I	57-1501 [1]	6.4 @ 4352
Dakota	5.2L V8 F/I	57-1501 [1]	6.4 @ 4352
Neon	2.0L L4 F/I - SOHC	57-1512 [1]	6.0 @ 5810
Ram 1500 Pickup	3.9L V6 F/I	57-1527-1 [1]	5.3 @ 3884
		57-1503-1 [1]	
Ram 1500 Pickup	5.2L V8 F/I	57-1511-2 [1]	11.8 @ 4248
Ram 1500 Pickup	5.9L V8 F/I	57-1511-2 [1]	11.8 @ 4248
Ram 2500 Pickup	5.2L V8 F/I	57-1511-2 [1]	11.8 @ 4248
Ram 2500 Pickup	5.9L L6 DSL	57-1525 [1]	9.2 @ 2560
Ram 2500 Pickup	5.9L V8 F/I	57-1511-2 [1]	11.8 @ 4248
Ram 2500 Pickup	8.0L V10 F/I	57-1507 [1]	15.8 @ 4128
Ram 3500 Pickup	5.9L L6 DSL	57-1525 [1]	9.2 @ 2560
Ram 3500 Pickup	8.0L V10 F/I	57-1507 [1]	15.8 @ 4128
Stealth	3.0L V6 F/I	57-1500-1 [1]	
1996 DODGE			
Viper	8.0L V10 F/I	57-1508 [1]	13.4 @ 5363
1995 DODGE			
Dakota	3.9L V6 F/I	57-1501 [1]	6.4 @ 4352
Dakota	5.2L V8 F/I	57-1501 [1]	6.4 @ 4352
Neon	2.0L L4 F/I - SOHC	57-1512 [1]	6.0 @ 5810
Ram 1500 Pickup	3.9L V6 F/I	57-1527-1 [1]	5.3 @ 3884
		57-1503-1 [1]	
Ram 1500 Pickup	5.2L V8 F/I	57-1511-2 [1]	11.8 @ 4248
Ram 1500 Pickup	5.9L V8 F/I	57-1511-2 [1]	11.8 @ 4248
Ram 2500 Pickup	5.2L V8 F/I	57-1511-2 [1]	11.8 @ 4248
Ram 2500 Pickup	5.9L L6 DSL	57-1525 [1]	9.2 @ 2560
Ram 2500 Pickup	5.9L V8 F/I	57-1511-2 [1]	11.8 @ 4248
Ram 2500 Pickup	8.0L V10 F/I	57-1507 [1]	15.8 @ 4128
Ram 3500 Pickup	5.9L L6 DSL	57-1525 [1]	9.2 @ 2560
Ram 3500 Pickup	8.0L V10 F/I	57-1507 [1]	15.8 @ 4128
Stealth	3.0L V6 F/I	57-1500-1 [1]	
Viper	8.0L V10 F/I	57-1508 [1]	13.4 @ 5363
1994 DODGE			
Dakota	3.9L V6 F/I	57-1501 [1]	6.4 @ 4352
Dakota	5.2L V8 F/I	57-1501 [1]	6.4 @ 4352
Ram 1500 Pickup	3.9L V6 F/I	57-1527-1 [1]	5.3 @ 3884
		57-1503-1 [1]	
Ram 1500 Pickup	5.2L V8 F/I	57-1511-2 [1]	11.8 @ 4248
Ram 1500 Pickup	5.9L V8 F/I	57-1511-2 [1]	11.8 @ 4248
Ram 2500 Pickup	5.9L L6 DSL	57-1525 [1]	9.2 @ 2560
Ram 2500 Pickup	5.9L V8 F/I	57-1511-2 [1]	11.8 @ 4248
Ram 2500 Pickup	8.0L V10 F/I	57-1507 [1]	15.8 @ 4128
Ram 3500 Pickup	5.9L L6 DSL	57-1525 [1]	9.2 @ 2560
Stealth	3.0L V6 F/I	57-1500-1 [1]	
1993 DODGE			
D250	5.9L V8 F/I	57-1502 [1]	
D350	5.9L V8 F/I	57-1502 [1]	
Dakota	3.9L V6 F/I	57-1501 [1]	6.4 @ 4352
Dakota	5.2L V8 F/I	57-1501 [1]	6.4 @ 4352
Stealth	3.0L V6 F/I	57-1500-1 [1]	
W250 Pickup	5.9L V8 F/I	57-1502 [1]	
W350 Pickup	5.9L V8 F/I	57-1502 [1]	
1992 DODGE			
D150	5.2L V8 F/I	57-1502 [1]	
D250	5.9L V8 F/I	57-1502 [1]	
D350	5.9L V8 F/I	57-1502 [1]	
Dakota	3.9L V6 F/I	57-1501 [1]	6.4 @ 4352
Dakota	5.2L V8 F/I	57-1501 [1]	6.4 @ 4352
Stealth	3.0L V6 F/I	57-1500-1 [1]	
W250 Pickup	5.9L V8 F/I	57-1502 [1]	
W350 Pickup	5.9L V8 F/I	57-1502 [1]	
1991 DODGE			
Stealth	3.0L V6 F/I	57-1500-1 [1]	
1998 EAGLE			
Talon TSi	2.0L L4 F/I	57-5504-1 [1]	7.7 @ 5900
1997 EAGLE			
Talon TSi	2.0L L4 F/I	57-5504-1 [1]	7.7 @ 5900
1996 EAGLE			
Talon TSi	2.0L L4 F/I	57-5504-1 [1]	7.7 @ 5900

1) Street legal in all US states. 2) Street legal in most states, but not legal for use in California or other states with similar emission control regulations.
* Estimated horsepower gains are based on specific or similar vehicle dyno tests. Results will vary. See Page 479 for more information.
Partial Listing - Complete List of Vehicles and Applications at knfilters.com. See page 5 for information on intake tube materials/colors.

Vehicle	Engine Type	Intake Kit	Estimated Horsepower*
1995 EAGLE			
Talon TSi	2.0L L4 F/I	57-5504-1 [1]	7.7 @ 5900
1993 EAGLE			
Talon	2.0L L4 F/I - exc. Turbo	57-5500 [1]	
1992 EAGLE			
Talon	2.0L L4 F/I - exc. Turbo	57-5500 [1]	
1991 EAGLE			
Talon	2.0L L4 F/I - exc. Turbo	57-5500 [1]	
1990 EAGLE			
Talon	2.0L L4 F/I - exc. Turbo	57-5500 [1]	
2002 FIAT			
Punto	1.8L L4 F/I	69-3300TP [2]	
2013 FORD			
Edge	3.5L V6 F/I	77-2583KS [2]	9.2 @ 4950
Edge	3.7L V6 F/I	77-2583KS [2]	9.2 @ 4950
Explorer	3.5L V6 F/I	77-2575KS [2]	13.6 @ 5500
F150	3.5L V6 F/I	63-2583 [2]	11.1 @ 4318
F150	5.0L V8 F/I	77-2581KP [2]	10.0 @ 5508
		63-2581 [2]	12.1 @ 5304
Fiesta	1.6L L4 F/I	69-3530TS [2]	3.8 @ 4518
Focus	2.0L L4 F/I - US	69-3517TS [2]	10.0 @ 5872
Mustang	3.7L V6 F/I	69-3529TP [2]	11.8 @ 5900
Mustang GT	5.0L V8 F/I	69-3527TP [2]	19.6 @ 5100
		63-2578 [2]	20.3 @ 5400
Mustang Shelby GT500	5.8L V8 F/I	63-2579 [2]	30.5 @ 5200
Taurus SHO	3.5L V6 F/I	69-3531TS [2]	12.1 @ 5327
2012 FORD			
E350 Super Duty	5.4L V8 F/I	77-2570KTK [2]	17.5 @ 4101
E350 Super Duty	6.8L V10 F/I	77-2570KTK [2]	17.5 @ 4101
E450 Super Duty	6.8L V10 F/I	77-2570KTK [2]	17.5 @ 4101
Edge	3.5L V6 F/I	77-2583KS [2]	9.2 @ 4950
Edge	3.7L V6 F/I	77-2583KS [2]	9.2 @ 4950
Expedition	5.4L V8 F/I	63-2575 [2]	11.0 @ 4600
Explorer	3.5L V6 F/I	77-2575KS [2]	13.6 @ 5500
F150	3.5L V6 F/I	63-2583 [2]	11.1 @ 4318
F150	5.0L V8 F/I	77-2581KP [2]	10.0 @ 5508
		63-2581 [2]	12.1 @ 5304
F150	6.2L V8 F/I	77-2584KP [2]	18.8 @ 5267
		63-2584 [2]	27.2 @ 5347
F250 Super Duty	6.2L V8 F/I	77-2582KTK [2]	13.6 @ 4497
F250 Super Duty	6.7L V8 DSL	63-2582 [2]	11.9 @ 2700
F350 Super Duty	6.2L V8 F/I	77-2582KTK [2]	13.6 @ 4497
F350 Super Duty	6.7L V8 DSL	63-2582 [2]	11.9 @ 2700
F450 Super Duty	6.7L V8 DSL	63-2582 [2]	11.9 @ 2700
F550 Super Duty	6.7L V8 DSL	63-2582 [2]	11.9 @ 2700
F150 SVT Raptor	6.2L V8 F/I	77-2579KTK [2]	20.0 @ 4830
Fiesta	1.6L L4 F/I	69-3530TS [2]	3.8 @ 4518
Fiesta VI	1.6L L4 F/I	69-3530TS [2]	3.8 @ 4518
Flex	3.5L V6 F/I - exc. Turbo	77-2578KS [2]	9.2 @ 4914
Focus	2.0L L4 F/I - US	69-3517TS [2]	10.0 @ 5872
Fusion	2.5L L4 F/I	69-3514TTK [2]	6.1 @ 4200
Mustang	3.7L V6 F/I	69-3529TP [2]	11.8 @ 5900
Mustang GT	5.0L V8 F/I	69-3527TP [2]	19.6 @ 5100
		63-2578 [2]	20.3 @ 5400
Mustang Shelby GT500	5.4L V8 F/I	63-2579 [2]	30.5 @ 5200
2012 FORD			
Taurus	3.5L V6 F/I	69-3528TS [2]	11.6 @ 4044
Taurus SHO	3.5L V6 F/I	69-3531TS [2]	12.1 @ 5327
2011 FORD			
Crown Victoria	4.6L V8 F/I	69-3532TTK [2]	10.2 @ 4491
E350 Super Duty	5.4L V8 F/I	77-2570KTK [2]	17.5 @ 4101
E350 Super Duty	6.8L V10 F/I	77-2570KTK [2]	17.5 @ 4101
E450 Super Duty	6.8L V10 F/I	77-2570KTK [2]	17.5 @ 4101
Edge	3.5L V6 F/I	77-2583KS [2]	9.2 @ 4950
Edge	3.7L V6 F/I	77-2583KS [2]	9.2 @ 4950
Expedition	5.4L V8 F/I	63-2575 [2]	11.0 @ 4600
Explorer	3.5L V6 F/I	77-2575KS [2]	13.6 @ 5500
F150	3.5L V6 F/I	63-2583 [2]	11.1 @ 4318
F150	5.0L V8 F/I	77-2581KP [2]	10.0 @ 5508
		63-2581 [2]	12.1 @ 5304
F150	6.2L V8 F/I	77-2584KP [2]	18.8 @ 5267
		63-2584 [2]	27.2 @ 5347
F250 Super Duty	6.2L V8 F/I	77-2582KTK [2]	13.6 @ 4497
F250 Super Duty	6.7L V8 DSL	63-2582 [2]	11.9 @ 2700
F350 Super Duty	6.2L V8 F/I	77-2582KTK [2]	13.6 @ 4497
F350 Super Duty	6.7L V8 DSL	63-2582 [2]	11.9 @ 2700
F450 Super Duty	6.7L V8 DSL	63-2582 [2]	11.9 @ 2700
F550 Super Duty	6.7L V8 DSL	63-2582 [2]	11.9 @ 2700
F150 SVT Raptor	6.2L V8 F/I	77-2579KTK [2]	20.0 @ 4830
Fiesta	1.6L L4 F/I	69-3530TS [2]	3.8 @ 4518
Fiesta VI	1.6L L4 F/I	69-3530TS [2]	3.8 @ 4518
Flex	3.5L V6 F/I - exc. Turbo	77-2578KS [2]	9.2 @ 4914
Focus	2.0L L4 F/I - PZEV	69-3516TTK [2]	5.8 @ 5000
Fusion	2.5L L4 F/I	69-3514TTK [2]	6.1 @ 4200
Mustang	3.7L V6 F/I	69-3529TP [2]	11.8 @ 5900
Mustang GT	5.0L V8 F/I	69-3527TP [2]	19.6 @ 5100
		63-2578 [2]	20.3 @ 5400
Mustang Shelby GT500	5.4L V8 F/I	63-2579 [2]	30.5 @ 5200
Ranger	4.0L V6 F/I	77-2561KP [2]	11.2 @ 4950
		63-1108 [2]	13.5 @ 5129
Taurus	3.5L V6 F/I	69-3528TS [2]	11.7 @ 4044
Taurus SHO	3.5L V6 F/I	69-3531TS [2]	12.1 @ 5327
2010 FORD			
Crown Victoria	4.6L V8 F/I	69-3532TTK [2]	10.2 @ 4491
E350 Super Duty	5.4L V8 F/I	77-2570KTK [2]	17.5 @ 4101
E350 Super Duty	6.8L V10 F/I	77-2570KTK [2]	17.5 @ 4101
E450 Super Duty	6.8L V10 F/I	77-2570KTK [2]	17.5 @ 4101
Edge	3.5L V6 F/I	77-2574KS [1]	11.2 @ 5797
Expedition	5.4L V8 F/I	63-2575 [2]	11.0 @ 4600
		57-2575 [1]	11.0 @ 4600
F150	4.6L V8 F/I - Exc. 2 Valve VIN W	77-2580KP [2]	15.1 @ 4650
		63-2580 [2]	16.1 @ 4650
F150	5.4L V8 F/I	63-2575 [2]	12.5 @ 4600
		57-2575 [1]	12.5 @ 4600
F250 Super Duty	5.4L V8 F/I	77-2577KTK [2]	13.9 @ 4077
F250 Super Duty	6.4L V8 DSL	57-2576 [1]	16.4 @ 2600
F350 Super Duty	5.4L V8 F/I	77-2577KTK [2]	13.9 @ 4077
F350 Super Duty	6.4L V8 DSL	57-2576 [1]	16.4 @ 2600
F450 Super Duty	6.4L V8 DSL	57-2576 [1]	16.4 @ 2600
F550 Super Duty	6.4L V8 DSL	57-2576 [1]	16.4 @ 2600
F150 SVT Raptor	5.4L V8 F/I	63-2575 [2]	11.0 @ 4600
		57-2575 [1]	11.0 @ 4600

1) Street legal in all US states. 2) Street legal in most states, but not legal for use in California or other states with similar emission control regulations.
* Estimated horsepower gains are based on specific or similar vehicle dyno tests. Results will vary. See Page 479 for more information.
Partial Listing - Complete List of Vehicles and Applications at knfilters.com. See page 5 for information on intake tube materials/colors.

AIR INTAKE SYSTEMS

Vehicle	Engine Type	Intake Kit	Estimated Horsepower*
2010 FORD			
F150 SVT Raptor	6.2L V8 F/I	77-2579KTK [2]	20.0 @ 4830
Fiesta VI	1.6L L4 F/I	69-3530TS [2]	3.8 @ 4518
Flex	3.5L V6 F/I - exc. Turbo	77-2578KS [2]	9.2 @ 4914
Focus	2.0L L4 F/I - PZEV	69-3516TTK [2]	5.8 @ 5000
Fusion	2.5L L4 F/I	69-3514TTK [2]	6.1 @ 4200
Mustang	4.0L V6 F/I	69-3525TS [2]	5.2 @ 4700
		63-2577 [2]	7.4 @ 4700
Mustang GT	4.6L V8 F/I	69-3526TP [2]	9.5 @ 5000
Mustang Shelby GT500	5.4L V8 F/I	63-2579 [2]	30.5 @ 5200
Ranger	4.0L V6 F/I	77-2561KP [2]	11.2 @ 4950
		63-1108 [2]	13.5 @ 5129
Taurus	3.5L V6 F/I	69-3528TS [2]	11.6 @ 4044
2009 FORD			
Crown Victoria	4.6L V8 F/I	69-3532TTK [2]	10.2 @ 4491
E350 Super Duty	5.4L V8 F/I	77-2570KTK [2]	17.5 @ 4101
E350 Super Duty	6.8L V10 F/I	77-2570KTK [2]	17.5 @ 4101
E450 Super Duty	6.8L V10 F/I	77-2570KTK [2]	17.5 @ 4101
Edge	3.5L V6 F/I	77-2574KS [1]	11.2 @ 5797
Expedition	5.4L V8 F/I	63-2575 [2]	11.0 @ 4600
		57-2575 [1]	11.0 @ 4600
F150	4.6L V8 F/I - Exc. 2 Valve VIN W	77-2580KP [2]	15.1 @ 4650
		63-2580 [2]	16.1 @ 4650
F150	5.4L V8 F/I	63-2575 [2]	11.0 @ 4600
		57-2575 [1]	11.0 @ 4600
F250 Super Duty	5.4L V8 F/I	77-2577KTK [2]	13.9 @ 4077
F250 Super Duty	6.4L V8 DSL	57-2576 [1]	16.4 @ 2600
F350 Super Duty	5.4L V8 F/I	77-2577KTK [2]	13.9 @ 4077
F350 Super Duty	6.4L V8 DSL	57-2576 [1]	16.4 @ 2600
F450 Super Duty	6.4L V8 DSL	57-2576 [1]	16.4 @ 2600
F550 Super Duty	6.4L V8 DSL	57-2576 [1]	16.4 @ 2600
Flex	3.5L V6 F/I	77-2578KS [2]	9.2 @ 4914
Focus	2.0L L4 F/I - PZEV, Not CARB exempt for LEV II SULEV Vehicles	69-3513TTK [1]	5.2 @ 5400
Fusion	2.3L L4 F/I - Not CARB exempt for LEV II SULEV Vehicles	69-3514TTK [1]	6.1 @ 4200
Fusion	3.0L V6 F/I	69-3515TS [1]	11.9 @ 5001
Mustang	4.0L V6 F/I	69-3522TP [1]	7.1 @ 5200
		57-2566 [1]	7.5 @ 4996
Mustang GT	4.6L V8 F/I	69-3523KP [2]	8.8 @ 5208
		63-2565 [2]	15.3 @ 6000
Mustang Shelby	5.4L V8 F/I	57-2571 [1]	57.0 @ 5900
Ranger	4.0L V6 F/I	77-2561KP [2]	11.2 @ 4950
		63-1108 [2]	13.5 @ 5129
2008 FORD			
Crown Victoria	4.6L V8 F/I	69-3532TTK [2]	10.2 @ 4491
E350 Econoline	5.4L V8 F/I	77-2570KTK [2]	17.5 @ 4101
E350 Super Duty	5.4L V8 F/I	77-2570KTK [2]	17.5 @ 4101
E350 Super Duty	6.8L V10 F/I	77-2570KTK [1]	17.5 @ 4101
E450 Super Duty	6.8L V10 F/I	77-2570KTK [1]	17.5 @ 4101
Edge	3.5L V6 F/I	77-2574KS [1]	11.2 @ 5797
Expedition	5.4L V8 F/I	63-2575 [2]	11.0 @ 4600
		57-2575 [1]	11.0 @ 4600
Explorer	4.6L V8 F/I	77-2573KP [1]	10.0 @ 4700
		57-2573 [1]	11.0 @ 4500
F150	4.2L V6 F/I	63-2572 [2]	7.4 @ 4016
2008 FORD			
F150	4.6L V8 F/I	57-2574 [1]	9.9 @ 4200
F150	5.4L V8 F/I	77-2556KP [1]	9.6 @ 3724
		57-2556 [1]	15.5 @ 3829
F250 Super Duty	5.4L V8 F/I	77-2577KTK [2]	13.9 @ 4077
F250 Super Duty	6.4L V8 DSL	57-2576 [1]	16.4 @ 2600
F350 Super Duty	5.4L V8 F/I	77-2577KTK [2]	13.9 @ 4077
F350 Super Duty	6.4L V8 DSL	57-2576 [1]	16.4 @ 2600
F450 Super Duty	6.4L V8 DSL	57-2576 [1]	16.4 @ 2600
F550 Super Duty	6.4L V8 DSL	57-2576 [1]	16.4 @ 2600
Fiesta V	2.0L L4 F/I	69-4002TB [2]	
Focus	2.0L L4 F/I - PZEV, Not CARB exempt for LEV II SULEV Vehicles	69-3513TTK [1]	5.2 @ 5400
Fusion	2.3L L4 F/I - Not CARB exempt for LEV II SULEV Vehicles	69-3514TTK [1]	6.1 @ 4200
Fusion	3.0L V6 F/I	69-3515TS [1]	11.9 @ 5001
Mustang	4.0L V6 F/I	69-3522TP [1]	7.1 @ 5200
		57-2566 [1]	7.5 @ 4996
Mustang GT	4.6L V8 F/I	69-3523KP [2]	8.8 @ 5208
		63-2565 [2]	15.3 @ 6000
Mustang Shelby	5.4L V8 F/I	57-2571 [1]	57.0 @ 5900
Ranger	3.0L V6 F/I	57-2560 [1]	10.0 @ 4921
Ranger	4.0L V6 F/I	77-2561KP [2]	11.2 @ 4950
		63-1108 [2]	13.5 @ 5129
2007 FORD			
Crown Victoria	4.6L V8 F/I	69-3532TTK [2]	10.2 @ 4491
E350 Econoline	5.4L V8 F/I	77-2570KTK [2]	17.5 @ 4101
E350 Super Duty	5.4L V8 F/I	77-2570KTK [2]	17.5 @ 4101
E350 Super Duty	6.8L V10 F/I	77-2570KTK [1]	17.5 @ 4101
E450 Super Duty	6.8L V10 F/I	77-2570KTK [1]	17.5 @ 4101
Edge	3.5L V6 F/I	77-2574KS [1]	11.2 @ 5797
Expedition	5.4L V8 F/I	63-2575 [2]	11.2 @ 4600
		63-2575 [2]	11.0 @ 4600
		57-2575 [1]	11.0 @ 4600
Explorer	4.6L V8 F/I	77-2573KP [1]	10.0 @ 4700
		57-2573 [1]	11.0 @ 4500
F150	4.2L V6 F/I	63-2572 [2]	7.4 @ 4016
F150	4.6L V8 F/I	57-2574 [1]	9.9 @ 4200
F150	5.4L V8 F/I	77-2556KP [1]	9.6 @ 3724
		57-2556 [1]	15.5 @ 3829
F250 Harley Davidson Super Duty	6.0L V8 DSL	57-2546-1 [1]	15.5 @ 3426
F250 Super Duty	5.4L V8 F/I	77-2577KTK [2]	13.9 @ 4077
F250 Super Duty	6.0L V8 DSL	57-2546-1 [1]	15.5 @ 3426
F350 Cutaway	6.0L V8 DSL	57-2546-1 [1]	15.5 @ 3426
F350 Harley Davidson Super Duty	6.0L V8 DSL	57-2546-1 [1]	15.5 @ 3426
F350 Super Duty	5.4L V8 F/I	77-2577KTK [2]	13.9 @ 4077
F350 Super Duty	6.0L V8 DSL	57-2546-1 [1]	15.5 @ 3426
F450 Super Duty	6.0L V8 DSL	57-2546-1 [1]	15.5 @ 3426
F550 Super Duty	6.0L V8 DSL	57-2546-1 [1]	15.5 @ 3426
Focus	2.0L L4 F/I - PZEV, Not CARB exempt for LEV II SULEV Vehicles	69-3513TTK [1]	5.2 @ 5400
Focus	2.3L L4 F/I	69-3512TR [2]	8.5 @ 5800
		69-3512TP [2]	8.5 @ 5800
Fusion	2.3L L4 F/I - Not CARB exempt for LEV II SULEV Vehicles	69-3514TTK [1]	6.1 @ 4200

1) Street legal in all US states. 2) Street legal in most states, but not legal for use in California or other states with similar emission control regulations.
* Estimated horsepower gains are based on specific or similar vehicle dyno tests. Results will vary. See Page 479 for more information.
Partial Listing - Complete List of Vehicles and Applications at knfilters.com. See page 5 for information on intake tube materials/colors.

Vehicle	Engine Type	Intake Kit	Estimated Horsepower*
2007 FORD			
Fusion	3.0L V6 F/I	69-3515TS [1]	11.9 @ 5001
Mustang	4.0L V6 F/I	69-3522TP [1]	7.1 @ 5200
		57-2566 [1]	7.5 @ 4996
Mustang GT	4.6L V8 F/I	69-3523KP [2]	8.8 @ 5208
		63-2565 [2]	15.3 @ 6000
Mustang Shelby	5.4L V8 F/I	57-2571 [1]	57.0 @ 5900
Ranger	3.0L V6 F/I	57-2560 [1]	10.0 @ 4921
Ranger	4.0L V6 F/I	77-2561KP [1]	11.2 @ 4950
		57-2561 [1]	13.5 @ 5129
2006 FORD			
Crown Victoria	4.6L V8 F/I	69-3532TTK [2]	10.2 @ 4491
E350 Super Duty	5.4L V8 F/I	77-2570KTK [2]	17.5 @ 4101
E350 Super Duty	6.8L V10 F/I	77-2570KTK [1]	17.5 @ 4101
E450 Super Duty	6.8L V10 F/I	77-2570KTK [1]	17.5 @ 4101
Expedition	5.4L V8 F/I	77-2568KP [1]	10.6 @ 3872
		57-2568 [1]	13.6 @ 3872
Explorer	4.6L V8 F/I	77-2573KP [1]	10.0 @ 4700
		57-2573 [1]	11.0 @ 4500
F150	4.2L V6 F/I	57-2572 [1]	7.4 @ 4016
F150	4.6L V8 F/I	77-2569KP [1]	7.7 @ 4775
		57-2569 [1]	8.5 @ 4775
F150	5.4L V8 F/I	77-2556KP [1]	9.6 @ 3724
		57-2556 [1]	15.5 @ 3829
F250 Harley Davidson Super Duty	6.0L V8 DSL	57-2546-1 [1]	15.5 @ 3426
F250 Super Duty	5.4L V8 F/I	57-2570 [1]	21.5 @ 4387
F250 Super Duty	6.0L V8 DSL	57-2546-1 [1]	15.5 @ 3426
F250 Super Duty	6.8L V10 F/I	57-2567 [1]	16.2 @ 4450
F350	5.4L V8 F/I	57-2570 [1]	21.5 @ 4387
F350 Cutaway	6.0L V8 DSL	57-2546-1 [1]	15.5 @ 3426
F350 Harley Davidson Super Duty	6.0L V8 DSL	57-2546-1 [1]	15.5 @ 3426
F350 Super Duty	5.4L V8 F/I	57-2570 [1]	21.5 @ 4387
F350 Super Duty	6.0L V8 DSL	57-2546-1 [1]	15.5 @ 3426
F350 Super Duty	6.8L V10 F/I	57-2567 [1]	16.2 @ 4450
F450 Super Duty	6.0L V8 DSL	57-2546-1 [1]	15.5 @ 3426
F550 Super Duty	6.0L V8 DSL	57-2546-1 [1]	15.5 @ 3426
Focus	2.3L L4 F/I	69-3512TR [2]	8.5 @ 5800
		69-3512TP [2]	8.5 @ 5800
Fusion	2.3L L4 F/I - Not CARB exempt for LEV II SULEV Vehicles	69-3514TTK [1]	6.1 @ 4200
Fusion	3.0L V6 F/I	69-3515TS [1]	11.9 @ 5001
Mustang	4.0L V6 F/I	69-3522TP [1]	7.1 @ 5200
		57-2566 [1]	7.5 @ 4996
Mustang GT	4.6L V8 F/I	69-3523KP [1]	8.8 @ 5208
		57-2565 [1]	15.3 @ 6000
Ranger	3.0L V6 F/I	57-2560 [1]	10.0 @ 4921
Ranger	4.0L V6 F/I	77-2561KP [1]	11.2 @ 4950
		57-2561 [1]	13.5 @ 5129
2005 FORD			
Crown Victoria	4.6L V8 F/I	69-3532TTK [2]	10.2 @ 4491
E350 Super Duty	5.4L V8 F/I	77-2570KTK [2]	17.5 @ 4101
E350 Super Duty	6.8L V10 F/I	77-2570KTK [1]	17.5 @ 4101
E450 Super Duty	6.8L V10 F/I	77-2570KTK [1]	17.5 @ 4101
Excursion	5.4L V8 F/I	57-2570 [1]	21.5 @ 4387
Excursion	6.0L V8 DSL	57-2546-1 [1]	15.5 @ 3426
Excursion	6.8L V10 F/I	57-2524-2 [1]	12.0 @ 4140
2005 FORD			
Expedition	5.4L V8 F/I	77-2556KP [1]	9.6 @ 3724
		57-2556 [1]	15.5 @ 3829
Explorer	4.6L V8 F/I	57-2564 [1]	10.4 @ 4921
F150	4.2L V6 F/I	57-2572 [1]	7.4 @ 4106
F150	4.6L V8 F/I	77-2557KP [1]	9.3 @ 4724
		57-2557 [1]	7.8 @ 4828
F150	5.4L V8 F/I	77-2556KP [1]	9.6 @ 3724
		57-2556 [1]	15.5 @ 3829
F250 Harley Davidson Super Duty	6.0L V8 DSL	57-2546-1 [1]	15.5 @ 3426
F250 Harley Davidson Super Duty	6.8L V10 F/I	57-2567 [1]	16.2 @ 4450
F250 Super Duty	5.4L V8 F/I	57-2570 [1]	21.5 @ 4387
F250 Super Duty	6.0L V8 DSL	57-2546-1 [1]	15.5 @ 3426
F250 Super Duty	6.8L V10 F/I	57-2567 [1]	16.2 @ 4450
F350	5.4L V8 F/I	57-2570 [1]	21.5 @ 4387
F350 Harley Davidson Super Duty	6.0L V8 DSL	57-2546-1 [1]	15.5 @ 3426
F350 Harley Davidson Super Duty	6.8L V10 F/I	57-2567 [1]	16.2 @ 4450
F350 Super Duty	5.4L V8 F/I	57-2570 [1]	21.5 @ 4387
F350 Super Duty	6.0L V8 DSL	57-2546-1 [1]	15.5 @ 3426
F350 Super Duty	6.8L V10 F/I	57-2567 [1]	16.2 @ 4450
F450 Super Duty	6.0L V8 DSL	57-2546-1 [1]	15.5 @ 3426
F550 Super Duty	6.0L V8 DSL	57-2546-1 [1]	15.5 @ 3426
Focus	2.0L L4 F/I - exc. PZEV	57-2559 [1]	11.9 @ 5797
Focus	2.3L L4 F/I	69-3512TR [2]	8.5 @ 5800
		69-3512TP [2]	8.5 @ 5800
		57-2559 [1]	11.9 @ 5797
Mustang	4.0L V6 F/I	69-3522TP [1]	7.1 @ 5200
		57-2566 [1]	7.5 @ 4596
Mustang GT	4.6L V8 F/I	69-3523KP [1]	8.8 @ 5208
		57-2565 [1]	15.3 @ 6000
Ranger	3.0L V6 F/I	57-2560 [1]	10.0 @ 4921
Ranger	4.0L V6 F/I	77-2561KP [1]	11.2 @ 4950
		57-2561 [1]	13.5 @ 5129
Thunderbird	3.9L V8 F/I	57-2562 [1]	15.8 @ 6000
2004 FORD			
Crown Victoria	4.6L V8 F/I	69-3532TTK [2]	10.2 @ 4491
E350 Super Duty	5.4L V8 F/I	77-2570KTK [2]	17.5 @ 4101
E350 Super Duty	6.8L V10 F/I	77-2570KTK [1]	17.5 @ 4101
E450 Super Duty	6.8L V10 F/I	77-2570KTK [1]	17.5 @ 4101
Excursion	5.4L V8 F/I	57-2525-2 [1]	11.6 @ 4480
Excursion	6.0L V8 DSL	57-2546-1 [1]	15.5 @ 3426
Excursion	6.8L V10 F/I	57-2524-2 [1]	12.0 @ 4140
Expedition	4.6L V8 F/I	77-2514KP [1]	9.7 @ 4093
		57-2538 [1]	10.2 @ 4618
Expedition	5.4L V8 F/I	77-2514KP [1]	9.7 @ 4093
		57-2538 [1]	10.2 @ 4618
Explorer	4.6L V8 F/I	57-2564 [1]	10.4 @ 4921
Explorer Sport Trac	4.0L V6 F/I	77-2529KP [1]	5.3 @ 5095
		57-2529-1 [1]	6.9 @ 5244
F150	4.6L V8 F/I	77-2557KP [1]	9.3 @ 4724
		57-2557 [1]	7.8 @ 4828
F150	5.4L V8 F/I	77-2556KP [1]	9.6 @ 3724
		57-2556 [1]	15.5 @ 3829

1) Street legal in all US states. 2) Street legal in most states, but not legal for use in California or other states with similar emission control regulations.
* Estimated horsepower gains are based on specific or similar vehicle dyno tests. Results will vary. See Page 479 for more information.
Partial Listing - Complete List of Vehicles and Applications at knfilters.com. See page 5 for information on intake tube materials/colors.

AIR INTAKE SYSTEMS

Vehicle	Engine Type	Intake Kit	Estimated Horsepower*
2004 FORD			
F150 Heritage	4.2L V6 F/I	77-2550KP [1]	6.2 @ 4567
		57-2550 [1]	7.6 @ 4891
F150 Heritage	4.6L V8 F/I	77-2514KP [1]	9.7 @ 4093
		57-2541 [1]	13.1 @ 4562
F150 Lightning	5.4L V8 F/I	57-2549 [1]	15.6 @ 5162
F250 Harley Davidson Super Duty	6.0L V8 DSL	57-2546-1 [1]	15.5 @ 3426
F250 Super Duty	5.4L V8 F/I	57-2525-2 [1]	11.6 @ 4480
F250 Super Duty	6.0L V8 DSL	57-2546-1 [1]	15.5 @ 3426
F250 Super Duty	6.8L V10 F/I	57-2524-2 [1]	12.0 @ 4140
F350	5.4L V8 F/I	57-2525-2 [1]	11.6 @ 4480
F350 Super Duty	5.4L V8 F/I	57-2525-2 [1]	11.6 @ 4480
F350 Super Duty	6.0L V8 DSL	57-2546-1 [1]	15.5 @ 3426
F350 Super Duty	6.8L V10 F/I	57-2524-2 [1]	12.0 @ 4140
F450 Super Duty	6.0L V8 DSL	57-2546-1 [1]	15.5 @ 3426
F550 Super Duty	6.0L V8 DSL	57-2546-1 [1]	15.5 @ 3426
Focus	2.0L L4 F/I - DOHC	57-2526-2 [1]	3.2 @ 5100
Focus	2.0L L4 F/I - Non-US	69-4000TS [2]	
		69-4000TB [2]	
Focus	2.3L L4 F/I	69-3512TR [2]	8.5 @ 5800
		69-3512TP [2]	8.5 @ 5800
		63-1101 [2]	11.9 @ 5797
Focus ST170	2.0L L4 F/I	69-3511TR [2]	6.2 @ 5000
		69-3511TP [2]	6.2 @ 5000
Focus SVT	2.0L L4 F/I	69-3511TR [1]	6.2 @ 5000
		69-3511TP [1]	6.2 @ 5000
		57-2547 [1]	5.5 @ 6500
Mustang	3.8L V6 F/I	57-2532 [1]	6.9 @ 4825
Mustang GT	4.6L V8 F/I	69-3521TP [1]	6.8 @ 4600
		57-2519-3 [1]	10.1 @ 4945
Mustang Mach 1	4.6L V8 F/I	57-2555 [1]	12.6 @ 5100
Mustang SVT Cobra	4.6L V8 F/I	57-2545 [1]	30.3 @ 5900
Ranger	3.0L V6 F/I	57-2560 [1]	10.0 @ 4921
Ranger	4.0L V6 F/I	77-2561KP [1]	11.2 @ 4950
		57-2561 [1]	13.5 @ 5129
Thunderbird	3.9L V8 F/I	69-3520TP [1]	8.0 @ 5379
		57-2562 [1]	15.8 @ 6000
2003 FORD			
Crown Victoria	4.6L V8 F/I	57-2553 [1]	13.1 @ 4979
E350 Club Wagon	5.4L V8 F/I	77-2570KTK [2]	17.5 @ 4101
E350 Club Wagon	6.8L V10 F/I	77-2570KTK [1]	17.5 @ 4101
E350 Van	5.4L V8 F/I	77-2570KTK [2]	17.5 @ 4101
E350 Van	6.8L V10 F/I	77-2570KTK [1]	17.5 @ 4101
E450 Super Duty	6.8L V10 F/I	77-2570KTK [1]	17.5 @ 4101
Escort ZX2	2.0L L4 F/I	69-3500TP [1]	4.6 @ 5700
		69-3500TB [1]	4.6 @ 5700
Excursion	5.4L V8 F/I	57-2525-2 [1]	11.6 @ 4480
Excursion	6.0L V8 DSL	57-2546-1 [1]	15.5 @ 3426
Excursion	6.8L V10 F/I	57-2524-2 [1]	12.0 @ 4140
Excursion	7.3L V8 DSL	57-2530 [1]	14.9 @ 2925
Expedition	4.6L V8 F/I	77-2514KP [1]	9.7 @ 4093
		57-2538 [1]	10.2 @ 4618
Expedition	5.4L V8 F/I	77-2514KP [1]	9.7 @ 4093
		57-2538 [1]	10.2 @ 4618
Explorer	4.0L V6 F/I	57-2537 [1]	7.3 @ 4890
Explorer	4.6L V8 F/I	57-2539 [1]	8.6 @ 4486
Explorer Sport	4.0L V6 F/I	77-2529KP [1]	5.3 @ 5095
		57-2529-1 [1]	6.9 @ 5244
2003 FORD			
Explorer Sport Trac	4.0L V6 F/I	77-2529KP [1]	5.3 @ 5095
		57-2529-1 [1]	6.9 @ 5244
F150	4.2L V6 F/I	77-2550KP [1]	6.2 @ 4567
		57-2550 [1]	7.6 @ 4891
F150	4.6L V8 F/I	77-2514KP [1]	9.7 @ 4093
		57-2541 [1]	13.1 @ 4562
F150	5.4L V8 F/I	77-2514KP [1]	9.7 @ 4093
		57-2541 [1]	13.1 @ 4562
F150 Harley Davidson	5.4L V8 F/I	57-2549 [1]	15.6 @ 5162
F150 Lightning	5.4L V8 F/I	57-2549 [1]	15.6 @ 5162
F250 Super Duty	5.4L V8 F/I	57-2525-2 [1]	11.6 @ 4480
F250 Super Duty	6.0L V8 DSL	57-2546-1 [1]	15.5 @ 3426
F250 Super Duty	6.8L V10 F/I	57-2524-2 [1]	12.0 @ 4140
F250 Super Duty	7.3L V8 DSL	57-2530 [1]	14.9 @ 2925
F350 Super Duty	5.4L V8 F/I	57-2525-2 [1]	11.6 @ 4480
F350 Super Duty	6.0L V8 DSL	57-2546-1 [1]	15.5 @ 3426
F350 Super Duty	6.8L V10 F/I	57-2524-2 [1]	12.0 @ 4140
F350 Super Duty	7.3L V8 DSL	57-2530 [1]	14.9 @ 2925
F450 Super Duty	6.0L V8 DSL	57-2546-1 [1]	15.5 @ 3426
F550 Super Duty	6.0L V8 DSL	57-2546-1 [1]	15.5 @ 3426
Focus	1.8L L4 F/I	69-4000TS [2]	
		69-4000TB [2]	
Focus	2.0L L4 F/I - DOHC	69-3510TP [1]	3.9 @ 2931
		69-3510TB [1]	3.9 @ 2931
		57-2526-2 [1]	3.2 @ 5100
Focus	2.0L L4 F/I - Non-US	69-4000TS [2]	
		69-4000TB [2]	
Focus	2.3L L4 F/I	69-3512TR [2]	8.5 @ 5800
		69-3512TP [2]	8.5 @ 5800
		63-1101 [2]	11.9 @ 5797
Focus ST170	2.0L L4 F/I	69-3511TR [2]	6.2 @ 5000
		69-3511TP [2]	6.2 @ 5000
Focus SVT	2.0L L4 F/I	69-3511TR [1]	6.2 @ 5000
		69-3511TP [1]	6.2 @ 5000
		57-2547 [1]	5.5 @ 6500
Mustang	3.8L V6 F/I	57-2532 [1]	6.9 @ 4825
Mustang GT	4.6L V8 F/I	69-3521TP [1]	6.8 @ 4600
		57-2519-3 [1]	10.1 @ 4945
Mustang Mach 1	4.6L V8 F/I	57-2555 [1]	12.6 @ 5100
Mustang SVT Cobra	4.6L V8 F/I	57-2545 [1]	30.3 @ 5900
Ranger	2.3L L4 F/I	77-2552KP [1]	6.1 @ 4498
		57-2552 [1]	6.8 @ 4874
Ranger	3.0L V6 F/I	57-2554 [1]	9.4 @ 4848
Ranger	4.0L V6 F/I	77-2529KP [1]	5.3 @ 5095
		57-2529-1 [1]	6.9 @ 5244
Thunderbird	3.9L V8 F/I	69-3520TP [1]	8.0 @ 5379
		57-2562 [1]	15.8 @ 6000
2002 FORD			
Crown Victoria	4.6L V8 F/I	57-2544 [1]	16.9 @ 5000
E350 Econoline	5.4L V8 F/I	77-2570KTK [2]	17.5 @ 4101
E350 Econoline	6.8L V10 F/I	77-2570KTK [1]	17.5 @ 4101
E350 Econoline Club Wagon	5.4L V8 F/I	77-2570KTK [2]	17.5 @ 4101
E350 Econoline Club Wagon	6.8L V10 F/I	77-2570KTK [1]	17.5 @ 4101
E450 Econoline Super Duty	6.8L V10 F/I	77-2570KTK [1]	17.5 @ 4101
Escort ZX2	2.0L L4 F/I	69-3500TP [1]	4.6 @ 5700

1) Street legal in all US states. 2) Street legal in most states, but not legal for use in California or other states with similar emission control regulations.
* Estimated horsepower gains are based on specific or similar vehicle dyno tests. Results will vary. See Page 479 for more information.
Partial Listing - Complete List of Vehicles and Applications at knfilters.com. See page 5 for information on intake tube materials/colors.

2002 FORD

Vehicle	Engine Type	Intake Kit	Estimated Horsepower*
Escort ZX2	2.0L L4 F/I	69-3500TB [1]	4.6 @ 5700
Excursion	5.4L V8 F/I	57-2525-2 [1]	11.6 @ 4482
Excursion	6.8L V10 F/I	57-2524-2 [1]	12.0 @ 4140
Excursion	7.3L V8 DSL	57-2530 [1]	14.9 @ 2925
Expedition	4.6L V8 F/I	77-2514KP [1]	9.7 @ 4093
		57-2541 [1]	13.1 @ 4562
		57-2514-4 [1]	9.8 @ 4198
Expedition	5.4L V8 F/I	77-2514KP [1]	9.7 @ 4093
		57-2541 [1]	13.1 @ 4562
		57-2514-4 [1]	9.8 @ 4198
Explorer	4.0L V6 F/I	57-2537 [1]	7.3 @ 4889
Explorer	4.6L V8 F/I	57-2539 [1]	8.6 @ 4486
Explorer Sport	4.0L V6 F/I	77-2529KP [1]	5.3 @ 5095
		57-2529-1 [1]	6.9 @ 5244
Explorer Sport Trac	4.0L V6 F/I	77-2529KP [1]	5.3 @ 5095
		57-2529-1 [1]	6.9 @ 5244
F150	4.2L V6 F/I	77-2550KP [1]	6.2 @ 4567
		57-2550 [1]	7.6 @ 4891
F150	4.6L V8 F/I	77-2514KP [1]	9.7 @ 4093
		57-2541 [1]	13.1 @ 4562
		57-2514-4 [1]	9.8 @ 4198
F150	5.4L V8 F/I	77-2514KP [1]	9.7 @ 4093
		57-2541 [1]	13.1 @ 4562
		57-2514-4 [1]	9.8 @ 4198
F150 Harley Davidson	5.4L V8 F/I	57-2549 [1]	15.6 @ 5162
F150 Lightning	5.4L V8 F/I	57-2549 [1]	15.6 @ 5162
F250 Super Duty	5.4L V8 F/I	57-2525-2 [1]	11.6 @ 4480
F250 Super Duty	6.8L V10 F/I	57-2524-2 [1]	12.0 @ 4140
F250 Super Duty	7.3L V8 DSL	57-2530 [1]	14.9 @ 2925
F350 Super Duty	5.4L V8 F/I	57-2525-2 [1]	11.6 @ 4480
F350 Super Duty	6.8L V10 F/I	57-2524-2 [1]	12.0 @ 4140
F350 Super Duty	7.3L V8 DSL	57-2530 [1]	14.9 @ 2925
Focus	1.8L L4 F/I	69-4000TS [2]	
		69-4000TB [2]	
Focus	2.0L L4 F/I - DOHC	69-3510TP [1]	3.9 @ 2931
		69-3510TB [1]	3.9 @ 2931
		57-2526-2 [1]	3.2 @ 5100
Focus	2.0L L4 F/I - Non-US	69-4000TS [2]	
		69-4000TB [2]	
Focus ST170	2.0L L4 F/I	69-3511TR [2]	6.2 @ 5000
		69-3511TP [2]	6.2 @ 5000
Focus SVT	2.0L L4 F/I	69-3511TR [1]	6.2 @ 5000
		69-3511TP [1]	6.2 @ 5000
		57-2547 [1]	5.5 @ 6500
Mustang	3.8L V6 F/I	57-2532 [1]	6.9 @ 4825
Mustang GT	4.6L V8 F/I	69-3521TP [1]	6.8 @ 4600
		63-1008 [2]	4.5 @ 4216
		57-2519-3 [1]	10.1 @ 4945
Ranger	2.3L L4 F/I	77-2552KP [1]	6.1 @ 4498
		57-2552 [1]	6.8 @ 4874
Ranger	3.0L V6 F/I	57-2554 [1]	9.4 @ 4848
Ranger	4.0L V6 F/I	77-2529KP [1]	5.3 @ 5095
		57-2529-1 [1]	6.9 @ 5244

2001 FORD

Vehicle	Engine Type	Intake Kit	Estimated Horsepower*
Crown Victoria	4.6L V8 F/I	57-2544 [1]	16.9 @ 5000
E350 Econoline Club Wagon	5.4L V8 F/I	77-2570KTK [2]	17.5 @ 4101

2001 FORD

Vehicle	Engine Type	Intake Kit	Estimated Horsepower*
E350 Econoline Club Wagon	6.8L V10 F/I	77-2570KTK [1]	17.5 @ 4101
E450 Econoline Super Duty	6.8L V10 F/I	77-2570KTK [1]	17.5 @ 4101
Escort ZX2	2.0L L4 F/I	69-3500TP [1]	4.6 @ 5700
		69-3500TB [1]	4.6 @ 5700
Excursion	5.4L V8 F/I	57-2525-2 [1]	11.6 @ 4480
Excursion	6.8L V10 F/I	57-2524-2 [1]	12.0 @ 4140
Excursion	7.3L V8 DSL	57-2530 [1]	14.9 @ 2925
Expedition	4.6L V8 F/I	77-2514KP [1]	9.7 @ 4093
		57-2541 [1]	13.1 @ 4562
		57-2514-4 [1]	9.8 @ 4198
Expedition	5.4L V8 F/I	77-2514KP [1]	9.7 @ 4093
		57-2541 [1]	13.1 @ 4562
		57-2514-4 [1]	9.8 @ 4198
Explorer	4.0L V6 F/I	77-2529KP [1]	5.3 @ 5095
		57-2529-1 [1]	6.9 @ 5244
Explorer Sport	4.0L V6 F/I	77-2529KP [1]	5.3 @ 5095
		57-2529-1 [1]	6.9 @ 5244
Explorer Sport Trac	4.0L V6 F/I - from 7/00	77-2529KP [1]	5.3 @ 5095
		57-2529-1 [1]	6.9 @ 5244
Explorer Sport Trac	4.0L V6 F/I - to 7/00	57-2528 [1]	8.6 @ 5303
F150	4.2L V6 F/I	77-2550KP [1]	6.2 @ 4567
		57-2550 [1]	7.6 @ 4891
F150	4.6L V8 F/I	77-2514KP [1]	9.7 @ 4093
		57-2541 [1]	13.1 @ 4562
		57-2514-4 [1]	9.8 @ 4198
F150	5.4L V8 F/I	77-2514KP [1]	9.7 @ 4093
		57-2541 [1]	13.1 @ 4562
		57-2514-4 [1]	9.8 @ 4198
F150 Harley Davidson	5.4L V8 F/I	77-2514KP [1]	9.7 @ 4093
		57-2541 [1]	13.1 @ 4562
		57-2514-4 [1]	9.8 @ 4198
F150 Lightning	5.4L V8 F/I	57-2549 [1]	15.6 @ 5162
F250 Super Duty	5.4L V8 F/I	57-2525-2 [1]	11.6 @ 4480
F250 Super Duty	6.8L V10 F/I	57-2524-2 [1]	12.0 @ 4140
F250 Super Duty	7.3L V8 DSL	57-2530 [1]	14.9 @ 2925
F350 Super Duty	5.4L V8 F/I	57-2525-2 [1]	11.6 @ 4480
F350 Super Duty	6.8L V10 F/I	57-2524-2 [1]	12.0 @ 4140
F350 Super Duty	7.3L V8 DSL	57-2530 [1]	14.9 @ 2925
Focus	1.8L L4 F/I	69-4000TS [2]	
		69-4000TB [2]	
Focus	2.0L L4 F/I - DOHC	69-3510TP [1]	3.9 @ 2931
		69-3510TB [1]	3.9 @ 2931
		57-2526-2 [1]	3.2 @ 5100
Focus	2.0L L4 F/I - Non-US	69-4000TS [2]	
		69-4000TB [2]	
Mustang	3.8L V6 F/I	57-2532 [1]	6.9 @ 4825
Mustang GT	4.6L V8 F/I	69-3524TP [2]	6.8 @ 4600
		63-1008 [2]	4.5 @ 4216
		57-2519-3 [1]	10.1 @ 4945
Mustang GT Bullitt	4.6L V8 F/I	57-2523-2 [1]	12.1 @ 5860
Mustang SVT Cobra	4.6L V8 F/I	63-1008 [2]	4.5 @ 4216
		57-2523-2 [1]	12.1 @ 5860
Ranger	2.3L L4 F/I	77-2552KP [1]	6.1 @ 4498
		57-2552 [1]	6.8 @ 4874
Ranger	2.5L L4 F/I	57-2540 [1]	6.6 @ 5000

1) Street legal in all US states. 2) Street legal in most states, but not legal for use in California or other states with similar emission control regulations.
* Estimated horsepower gains are based on specific or similar vehicle dyno tests. Results will vary. See Page 479 for more information.
Partial Listing - Complete List of Vehicles and Applications at knfilters.com. See page 5 for information on intake tube materials/colors.

AIR INTAKE SYSTEMS

Vehicle	Engine Type	Intake Kit	Estimated Horsepower*
2001 FORD			
Ranger	3.0L V6 F/I	57-2533 [1]	5.6 @ 4721
Ranger	4.0L V6 F/I	77-2529KP [1]	5.3 @ 5095
		57-2529-1 [1]	6.9 @ 5244
2000 FORD			
Crown Victoria	4.6L V8 F/I	57-2544 [1]	16.9 @ 5000
E350 Econoline	5.4L V8 F/I	77-2570KTK [2]	17.5 @ 4101
E350 Econoline	6.8L V10 F/I	77-2570KTK [1]	17.5 @ 4101
E350 Econoline Club Wagon	5.4L V8 F/I	77-2570KTK [2]	17.5 @ 4101
E350 Econoline Club Wagon	6.8L V10 F/I	77-2570KTK [1]	17.5 @ 4101
E450 Econoline Super Duty	6.8L V10 F/I	77-2570KTK [1]	17.5 @ 4101
Escort ZX2	2.0L L4 F/I	69-3500TP [1]	4.6 @ 5700
		69-3500TB [1]	4.6 @ 5700
Excursion	5.4L V8 F/I	57-2525-2 [1]	11.6 @ 4480
Excursion	6.8L V10 F/I	57-2524-2 [1]	12.0 @ 4140
Excursion	7.3L V8 DSL	57-2530 [1]	14.9 @ 2925
Expedition	4.6L V8 F/I	77-2514KP [1]	9.7 @ 4093
		57-2541 [1]	13.1 @ 4562
		57-2514-4 [1]	9.8 @ 4198
Expedition	5.4L V8 F/I	77-2514KP [1]	9.7 @ 4093
		57-2541 [1]	13.1 @ 4562
		57-2514-4 [1]	9.8 @ 4198
Explorer	4.0L V6 F/I - OHV	77-2527KP [2]	8.4 @ 4476
		57-2527 [1]	3.2 @ 3969
Explorer	4.0L V6 F/I - SOHC	77-2528KP [2]	12.0 @ 4764
		57-2528 [1]	8.6 @ 5303
F150	4.2L V6 F/I	77-2550KP [1]	6.2 @ 4567
		57-2550 [1]	7.6 @ 4891
F150	4.6L V8 F/I	77-2514KP [1]	9.7 @ 4093
		57-2541 [1]	13.1 @ 4562
		57-2514-4 [1]	9.8 @ 4198
F150	5.4L V8 F/I	77-2514KP [1]	9.7 @ 4093
		57-2541 [1]	13.1 @ 4562
		57-2514-4 [1]	9.8 @ 4198
F150 Harley Davidson	5.4L V8 F/I	77-2514KP [1]	9.7 @ 4093
		57-2541 [1]	13.1 @ 4562
		57-2514-4 [1]	9.8 @ 4198
F150 Lightning	5.4L V8 F/I	57-2548 [1]	15.3 @ 5000
F250 Super Duty	5.4L V8 F/I	57-2525-2 [1]	11.6 @ 4480
F250 Super Duty	6.8L V10 F/I	57-2524-2 [1]	12.0 @ 4140
F250 Super Duty	7.3L V8 DSL	57-2530 [1]	14.9 @ 2925
F350 Super Duty	5.4L V8 F/I	57-2525-2 [1]	11.6 @ 4480
F350 Super Duty	6.8L V10 F/I	57-2524-2 [1]	12.0 @ 4140
F350 Super Duty	7.3L V8 DSL	57-2530 [1]	14.9 @ 2925
Focus	1.8L L4 F/I	69-4000TS [2]	
		69-4000TB [2]	
Focus	2.0L L4 F/I - DOHC	69-3510TP [1]	3.9 @ 2931
		69-3510TB [1]	3.9 @ 2931
		57-2526-2 [1]	3.2 @ 5100
Focus	2.0L L4 F/I - Non-US	69-4000TS [2]	
		69-4000TB [2]	
Mustang	3.8L V6 F/I	57-2532 [1]	6.9 @ 4820
Mustang GT	4.6L V8 F/I	69-3524TP [2]	6.8 @ 4600
		63-1008 [2]	4.5 @ 4216
		57-2519-3 [1]	10.1 @ 4945

Vehicle	Engine Type	Intake Kit	Estimated Horsepower*
2000 FORD			
Mustang SVT Cobra	4.6L V8 F/I	63-1008 [2]	4.5 @ 4216
Ranger	2.5L L4 F/I	57-2540 [1]	6.6 @ 5000
Ranger	3.0L V6 F/I	57-2533 [1]	5.6 @ 4721
Ranger	4.0L V6 F/I	57-2527 [1]	3.2 @ 3969
Ranger	4.0L V6 F/I - OHV	77-2527KP [2]	8.4 @ 4476
Ranger	4.0L V6 F/I - SOHC	77-2528KP [2]	12.0 @ 4764
1999 FORD			
Crown Victoria	4.6L V8 F/I	57-2544 [1]	16.9 @ 5000
E350 Econoline	6.8L V10 F/I	77-2570KTK [1]	17.5 @ 4101
E350 Econoline Club Wagon	5.4L V8 F/I	77-2570KTK [2]	17.5 @ 4101
E350 Econoline Club Wagon	6.8L V10 F/I	77-2570KTK [1]	17.5 @ 4101
E450 Econoline Super Duty	6.8L V10 F/I	77-2570KTK [1]	17.5 @ 4101
Expedition	4.6L V8 F/I	77-2514KP [1]	9.7 @ 4093
		57-2541 [1]	13.1 @ 4562
		57-2514-4 [1]	9.8 @ 4198
Expedition	5.4L V8 F/I	77-2514KP [1]	9.7 @ 4093
		57-2541 [1]	13.1 @ 4562
		57-2514-4 [1]	9.8 @ 4198
Explorer	4.0L V6 F/I - OHV	77-2527KP [2]	8.4 @ 4476
		57-2527 [1]	3.2 @ 3969
Explorer	4.0L V6 F/I - SOHC	77-2528KP [2]	12.0 @ 4764
		57-2528 [1]	8.6 @ 5303
F150	4.2L V6 F/I	77-2550KP [1]	6.2 @ 4567
		57-2550 [1]	7.6 @ 4891
F150	4.6L V8 F/I	77-2514KP [1]	9.7 @ 4093
		57-2541 [1]	13.1 @ 4562
		57-2514-4 [1]	9.8 @ 4198
F150	5.4L V8 F/I	77-2514KP [1]	9.7 @ 4093
		57-2541 [1]	13.1 @ 4562
		57-2514-4 [1]	9.8 @ 4198
F150 Lightning	5.4L V8 F/I	57-2548 [1]	15.3 @ 4974
F250	5.4L V8 F/I	77-2514KP [1]	9.7 @ 4093
		57-2525-2 [1]	11.6 @ 4480
F250 Super Duty	5.4L V8 F/I	57-2525-2 [1]	11.6 @ 4480
F250 Super Duty	6.8L V10 F/I	57-2524-2 [1]	12.0 @ 4140
F250 Super Duty	7.3L V8 DSL - from 12/98	57-2530 [1]	14.9 @ 2925
F350 Super Duty	5.4L V8 F/I	57-2525-2 [1]	11.6 @ 4480
F350 Super Duty	6.8L V10 F/I	57-2524-2 [1]	12.0 @ 4140
F350 Super Duty	7.3L V8 DSL - from 12/98	57-2530 [1]	14.9 @ 2925
F450 Super Duty	6.8L V10 F/I	57-2524-2 [1]	12.0 @ 4140
F450 Super Duty	7.3L V8 DSL	57-2530 [1]	14.9 @ 2925
F550 Super Duty	6.8L V10 F/I	57-2524-2 [1]	12.0 @ 4140
F550 Super Duty	7.3L V8 DSL	57-2530 [1]	14.9 @ 2925
Mustang	3.8L V6 F/I	57-2532 [1]	6.9 @ 4825
Mustang GT	4.6L V8 F/I	69-3524TP [2]	6.8 @ 4600
		63-1008 [2]	4.5 @ 4216
		57-2519-3 [1]	10.1 @ 4945
Mustang SVT Cobra	4.6L V8 F/I	63-1008 [2]	4.5 @ 4216
		57-2523-2 [1]	12.1 @ 5860
Ranger	2.5L L4 F/I	57-2540 [1]	6.6 @ 5000
Ranger	3.0L V6 F/I	57-2533 [1]	5.6 @ 4721
Ranger	4.0L V6 F/I	57-2527 [1]	3.2 @ 3969
Ranger	4.0L V6 F/I - OHV	77-2527KP [2]	8.4 @ 4476
Ranger	4.0L V6 F/I - SOHC	77-2528KP [2]	12.0 @ 4764

1) Street legal in all US states. 2) Street legal in most states, but not legal for use in California or other states with similar emission control regulations.
* Estimated horsepower gains are based on specific or similar vehicle dyno tests. Results will vary. See Page 479 for more information.
Partial Listing - Complete List of Vehicles and Applications at knfilters.com. See page 5 for information on intake tube materials/colors.

Vehicle	Engine Type	Intake Kit	Estimated Horsepower*
1998 FORD			
E350 Econoline	6.8L V10 F/I	77-2570KTK [1]	17.5 @ 4101
E350 Econoline Club Wagon	5.4L V8 F/I	77-2570KTK [2]	17.5 @ 4101
E350 Econoline Club Wagon	6.8L V10 F/I	77-2570KTK [1]	17.5 @ 4101
E450 Econoline Super Duty	6.8L V10 F/I	77-2570KTK [1]	17.5 @ 4101
Expedition	4.6L V8 F/I	77-2514KP [1]	9.7 @ 4093
		57-2541 [1]	13.1 @ 4562
		57-2514-4 [1]	9.8 @ 4198
Expedition	5.4L V8 F/I	77-2514KP [1]	9.7 @ 4093
		57-2541 [1]	13.1 @ 4562
		57-2514-4 [1]	9.8 @ 4198
Explorer	4.0L V6 F/I - OHV	77-2527KP [2]	8.4 @ 4476
		57-2527 [1]	3.2 @ 3969
Explorer	4.0L V6 F/I - SOHC	77-2528KP [2]	12.0 @ 4764
		57-2528 [1]	8.6 @ 5303
F150	4.2L V6 F/I	77-2550KP [1]	6.2 @ 4567
		57-2550 [1]	7.6 @ 4891
F150	4.6L V8 F/I	77-2514KP [1]	9.7 @ 4093
		57-2541 [1]	13.1 @ 4562
		57-2514-4 [1]	9.8 @ 4198
F150	5.4L V8 F/I	77-2514KP [1]	9.7 @ 4093
		57-2541 [1]	13.1 @ 4562
		57-2514-4 [1]	9.8 @ 4198
F250	4.6L V8 F/I	77-2514KP [1]	9.7 @ 4093
F250	5.4L V8 F/I	77-2514KP [1]	9.7 @ 4093
		57-2514-4 [1]	9.8 @ 4198
Mustang GT	4.6L V8 F/I	69-3524TP [2]	6.8 @ 4600
		63-1008 [2]	4.5 @ 4216
		57-2519-3 [1]	10.1 @ 4945
Mustang SVT Cobra	4.6L V8 F/I	63-1008 [2]	4.5 @ 4216
		57-2523-2 [1]	12.1 @ 5860
Ranger	2.5L L4 F/I	57-2540 [1]	6.6 @ 5000
Ranger	3.0L V6 F/I	57-2533 [1]	5.6 @ 4721
Ranger	4.0L V6 F/I - OHV	77-2527KP [2]	8.4 @ 4476
		57-2527 [1]	3.2 @ 3970
Ranger	4.0L V6 F/I - SOHC	77-2528KP [2]	12.0 @ 4764
1997 FORD			
E350 Econoline	6.8L V10 F/I	77-2570KTK [1]	17.5 @ 4101
E350 Econoline Club Wagon	6.8L V10 F/I	77-2570KTK [1]	17.5 @ 4101
E450 Econoline Super Duty	6.8L V10 F/I	77-2570KTK [1]	17.5 @ 4101
Expedition	4.6L V8 F/I	77-2514KP [1]	9.7 @ 4093
		57-2541 [1]	13.1 @ 4562
		57-2514-4 [1]	9.8 @ 4198
Expedition	5.4L V8 F/I	77-2514KP [1]	9.7 @ 4093
		57-2541 [1]	13.1 @ 4562
		57-2514-4 [1]	9.8 @ 4198
Explorer	4.0L V6 F/I - OHV	77-2527KP [2]	8.4 @ 4476
		57-2536 [1]	5.9 @ 4202
		57-2513-1 [1]	
Explorer	4.0L V6 F/I - OHV, w/Panel Filter	57-2527 [1]	3.2 @ 3969
Explorer	4.0L V6 F/I - SOHC	77-2528KP [2]	12.0 @ 4764
		57-2528 [1]	8.6 @ 5303
Explorer	5.0L V8 F/I - w/Round Filter	57-2513-1 [1]	
F150	4.2L V6 F/I	77-2550KP [1]	6.2 @ 4567
1997 FORD			
F150	4.2L V6 F/I	57-2550 [1]	7.6 @ 4891
F150	4.6L V8 F/I	77-2514KP [1]	9.7 @ 4093
		57-2541 [1]	13.1 @ 4562
		57-2514-4 [1]	9.8 @ 4198
F150	5.4L V8 F/I	77-2514KP [1]	9.7 @ 4093
		57-2541 [1]	13.1 @ 4562
		57-2514-4 [1]	9.8 @ 4198
F250	4.6L V8 F/I	77-2514KP [1]	9.7 @ 4093
		57-2514-4 [1]	9.8 @ 4198
F250	5.4L V8 F/I	77-2514KP [1]	9.7 @ 4093
		57-2514-4 [1]	9.8 @ 4198
F250	7.3L V8 DSL	57-2531 [1]	9.8 @ 3022
F250	7.5L V8 F/I - w/mass air	57-2516 [1]	
F250	7.5L V8 F/I - w/o mass air	63-1014 [2]	9.8 @ 3787
F350	7.3L V8 DSL	57-2531 [1]	9.8 @ 3022
F350	7.5L V8 F/I - w/mass air	57-2516 [1]	
F350	7.5L V8 F/I - w/o mass air	63-1014 [2]	9.5 @ 3787
Mustang GT	4.6L V8 F/I	69-3524TP [2]	6.8 @ 4600
		63-1008 [2]	4.5 @ 4216
		57-2519-3 [1]	10.1 @ 4945
Mustang SVT Cobra	4.6L V8 F/I	63-1008 [2]	4.5 @ 4216
		57-2523-2 [1]	12.1 @ 5860
Probe	2.5L V6 F/I - US	57-2507 [1]	
Ranger	2.3L L4 F/I - Manual Trans.	57-2535 [1]	6.1 @ 5200
Ranger	4.0L V6 F/I	77-2527KP [2]	8.4 @ 4476
Ranger	4.0L V6 F/I - w/Panel Filter	57-2527 [1]	3.2 @ 3969
Ranger	4.0L V6 F/I - w/Round Filter	57-2513-1 [1]	
Thunderbird	3.8L V6 F/I	57-2505-1 [1]	4.7 @ 3418
Thunderbird	4.6L V8 F/I	57-2505-1 [1]	4.7 @ 3418
1996 FORD			
Bronco	5.0L V8 F/I - w/mass air	57-2543 [1]	10.2 @ 4201
		57-2510-1 [1]	9.7 @ 4313
Bronco	5.0L V8 F/I - w/o mass air	63-1014 [2]	9.5 @ 3787
Bronco	5.8L V8 F/I - w/mass air	57-2543 [1]	10.2 @ 4201
		57-2510-1 [1]	9.7 @ 4313
Bronco	5.8L V8 F/I - w/o mass air	63-1014 [2]	9.5 @ 3787
Explorer	4.0L V6 F/I	57-2536 [1]	5.9 @ 4202
		57-2513-1 [1]	
Explorer	5.0L V8 F/I	57-2513-1 [1]	
F150	4.9L L6 F/I - w/mass air	57-2510-1 [1]	9.7 @ 4313
F150	4.9L L6 F/I - w/o mass air	63-1014 [2]	9.5 @ 3787
F150	5.0L V8 F/I - w/mass air	57-2543 [1]	10.2 @ 4201
		57-2510-1 [1]	9.7 @ 4313
F150	5.0L V8 F/I - w/o mass air	63-1014 [2]	9.5 @ 3787
F150	5.8L V8 F/I - w/mass air	57-2543 [1]	10.2 @ 4201
		57-2510-1 [1]	9.7 @ 4313
F150	5.8L V8 F/I - w/o mass air	63-1014 [2]	9.5 @ 3787

1) Street legal in all US states. 2) Street legal in most states, but not legal for use in California or other states with similar emission control regulations.
* Estimated horsepower gains are based on specific or similar vehicle dyno tests. Results will vary. See Page 479 for more information.
Partial Listing - Complete List of Vehicles and Applications at knfilters.com. See page 5 for information on intake tube materials/colors.

AIR INTAKE SYSTEMS

Vehicle	Engine Type	Intake Kit	Estimated Horsepower*
1996 FORD			
F250	5.0L V8 F/I - w/mass air	57-2510-1 [1]	9.7 @ 4313
F250	5.0L V8 F/I - w/o mass air	63-1014 [2]	9.5 @ 3787
F250	5.8L V8 F/I - w/mass air	57-2510-1 [1]	9.7 @ 4313
F250	5.8L V8 F/I - w/o mass air	63-1014 [2]	9.5 @ 3787
F250	7.3L V8 DSL	57-2531 [1]	9.8 @ 3022
F250	7.5L V8 F/I - w/mass air	57-2516 [1]	
F250	7.5L V8 F/I - w/o mass air	63-1014 [2]	9.5 @ 3787
F350	5.8L V8 F/I - w/mass air	57-2510-1 [1]	9.7 @ 4313
F350	5.8L V8 F/I - w/o mass air	63-1014 [2]	9.5 @ 3787
F350	7.3L V8 DSL	57-2531 [1]	9.8 @ 3022
F350	7.5L V8 F/I - w/mass air	57-2516 [1]	
F350	7.5L V8 F/I - w/o mass air	63-1014 [2]	9.5 @ 3787
Mustang GT	4.6L V8 F/I	69-3524TP [2]	6.8 @ 4600
		63-1008 [2]	4.5 @ 4216
		57-2519-3 [1]	10.1 @ 4945
Mustang SVT Cobra	4.6L V8 F/I	63-1008 [2]	4.5 @ 4216
		57-2523-2 [1]	12.1 @ 5860
Probe	2.5L V6 F/I - US	57-2507 [1]	
Ranger	2.3L L4 F/I - Manual Trans.	57-2535 [1]	6.1 @ 5200
Ranger	4.0L V6 F/I	57-2513-1 [1]	
Thunderbird	3.8L V6 F/I	57-2505-1 [1]	4.7 @ 3418
Thunderbird	4.6L V8 F/I	57-2505-1 [1]	4.7 @ 3418
1995 FORD			
Bronco	5.0L V8 F/I - w/mass air	57-2543 [1]	10.2 @ 4201
		57-2510-1 [1]	9.7 @ 4313
Bronco	5.0L V8 F/I - w/o mass air	57-2542 [1]	9.3 @ 3696
		57-2503 [1]	5.3 @ 3654
Bronco	5.8L V8 F/I - w/mass air	57-2543 [1]	10.2 @ 4201
		57-2510-1 [1]	9.7 @ 4313
Bronco	5.8L V8 F/I - w/o mass air	57-2542 [1]	9.3 @ 3696
		57-2503 [1]	5.3 @ 3654
Escort	1.8L L4 F/I	57-2500 [1]	
Explorer	4.0L V6 F/I	57-2536 [1]	5.9 @ 4202
		57-2513-1 [1]	
F150	4.9L L6 F/I - w/mass air	57-2510-1 [1]	9.7 @ 4313
F150	4.9L L6 F/I - w/o mass air	57-2503 [1]	5.3 @ 3654
F150	5.0L V8 F/I - w/mass air	57-2543 [1]	10.2 @ 4201
		57-2510-1 [1]	9.7 @ 4313
F150	5.0L V8 F/I - w/o mass air	57-2542 [1]	9.3 @ 3696
		57-2503 [1]	5.3 @ 3654
F150	5.8L V8 F/I - w/mass air	57-2543 [1]	10.2 @ 4201
		57-2510-1 [1]	9.7 @ 4313
F150	5.8L V8 F/I - w/o mass air	57-2542 [1]	9.3 @ 3696
1995 FORD			
F150	5.8L V8 F/I - w/o mass air	57-2503 [1]	5.3 @ 3654
F150 Lightning	5.8L V8 F/I	57-2517 [1]	
F250	5.8L V8 F/I - w/mass air	57-2543 [1]	10.2 @ 4201
		57-2510-1 [1]	9.7 @ 4313
F250	5.8L V8 F/I - w/o mass air	57-2503 [1]	5.3 @ 3654
F250	7.3L V8 DSL	57-2531 [1]	9.8 @ 3022
F250	7.5L V8 F/I - w/o mass air	57-2503 [1]	5.3 @ 3654
F350	5.8L V8 F/I - w/mass air	57-2543 [1]	10.2 @ 4201
		57-2510-1 [1]	9.7 @ 4313
F350	5.8L V8 F/I - w/o mass air	57-2503 [1]	5.3 @ 3654
F350	7.3L V8 DSL	57-2531 [1]	9.8 @ 3022
F350	7.5L V8 F/I - w/o mass air	57-2503 [1]	5.3 @ 3654
Mustang	5.0L V8 F/I	57-2511 [1]	13.0 @ 4801
Mustang SVT Cobra	5.0L V8 F/I	57-2511 [1]	13.0 @ 4801
Probe	2.5L V6 F/I - US	57-2507 [1]	
Ranger	2.3L L4 F/I - Manual Trans.	57-2535 [1]	6.1 @ 5200
Ranger	4.0L V6 F/I	57-2513-1 [1]	
Thunderbird	3.8L V6 F/I - exc. S/C	57-2505-1 [1]	4.7 @ 3418
Thunderbird	4.6L V8 F/I	57-2505-1 [1]	4.7 @ 3418
1994 FORD			
Bronco	5.0L V8 F/I - w/mass air	57-2543 [1]	10.2 @ 4201
		57-2510-1 [1]	9.7 @ 4313
Bronco	5.0L V8 F/I - w/o mass air	57-2542 [1]	9.3 @ 3696
		57-2503 [1]	5.3 @ 3654
Bronco	5.8L V8 F/I - w/o mass air	57-2542 [1]	9.3 @ 3696
		57-2503 [1]	5.3 @ 3654
Escort	1.8L L4 F/I	57-2500 [1]	
F150	4.9L L6 F/I - w/o mass air	57-2503 [1]	5.3 @ 3654
F150	5.0L V8 F/I - w/mass air	57-2543 [1]	10.2 @ 4201
		57-2510-1 [1]	9.7 @ 4313
F150	5.0L V8 F/I - w/o mass air	57-2542 [1]	9.3 @ 3696
		57-2503 [1]	5.3 @ 3654
F150	5.8L V8 F/I - w/o mass air	57-2542 [1]	9.3 @ 3696
		57-2503 [1]	5.3 @ 3654
F150 Lightning	5.8L V8 F/I	57-2517 [1]	
F250	5.8L V8 F/I - w/o mass air	57-2503 [1]	5.3 @ 3654
F250	7.3L V8 DSL - VIN F	57-2531 [1]	9.8 @ 3022
F250	7.5L V8 F/I - w/o mass air	57-2503 [1]	5.3 @ 3654
F350	5.8L V8 F/I - w/o mass air	57-2503 [1]	5.3 @ 3654
F350	7.3L V8 DSL - VIN F	57-2531 [1]	9.8 @ 3022
F350	7.5L V8 F/I - w/o mass air	57-2503 [1]	5.3 @ 3654
Mustang	5.0L V8 F/I	57-2511 [1]	13.0 @ 4800
Mustang SVT Cobra	5.0L V8 F/I	57-2511 [1]	13.0 @ 4801
Probe	2.5L V6 F/I - US	57-2507 [1]	

1) Street legal in all US states. 2) Street legal in most states, but not legal for use in California or other states with similar emission control regulations.
* Estimated horsepower gains are based on specific or similar vehicle dyno tests. Results will vary. See Page 479 for more information.
Partial Listing - Complete List of Vehicles and Applications at knfilters.com. See page 5 for information on intake tube materials/colors.

Vehicle	Engine Type	Intake Kit	Estimated Horsepower*
1994 FORD			
Thunderbird	3.8L V6 F/I - exc. S/C	57-2505-1 [1]	4.7 @ 3418
Thunderbird	4.6L V8 F/I	57-2505-1 [1]	4.7 @ 3418
1993 FORD			
Bronco	5.0L V8 F/I	57-2542 [1]	9.3 @ 3696
		57-2503 [1]	5.3 @ 3654
Bronco	5.8L V8 F/I	57-2542 [1]	9.3 @ 3696
		57-2503 [1]	5.3 @ 3654
Escort GT	1.8L L4 F/I	57-2500 [1]	
F150	4.9L L6 F/I	57-2503 [1]	5.3 @ 3654
F150	5.0L V8 F/I	57-2542 [1]	9.3 @ 3696
		57-2503 [1]	5.3 @ 3654
F150	5.8L V8 F/I	57-2542 [1]	9.3 @ 3696
		57-2503 [1]	5.3 @ 3654
F150 Lightning	5.8L V8 F/I	57-2517 [1]	
F250	5.8L V8 F/I	57-2503 [1]	5.3 @ 3654
F250	7.5L V8 F/I	57-2503 [1]	5.3 @ 3654
F350	5.8L V8 F/I	57-2503 [1]	5.3 @ 3654
F350	7.5L V8 F/I	57-2503 [1]	5.3 @ 3654
Mustang	5.0L V8 F/I	57-2502 [1]	6.8 @ 4706
Probe	2.5L V6 F/I	57-2507 [1]	
Thunderbird	3.8L V6 F/I - exc. S/C	57-2505-1 [1]	4.7 @ 3418
Thunderbird	5.0L V8 F/I	57-2505-1 [1]	4.7 @ 3418
1992 FORD			
Bronco	5.0L V8 F/I	57-2542 [1]	9.3 @ 3696
		57-2503 [1]	5.3 @ 3654
Bronco	5.8L V8 F/I	57-2542 [1]	9.3 @ 3696
		57-2503 [1]	5.3 @ 3654
F150	4.9L L6 F/I	57-2503 [1]	5.3 @ 3654
F150	5.0L V8 F/I	57-2542 [1]	9.3 @ 3696
		57-2503 [1]	5.3 @ 3654
F150	5.8L V8 F/I	57-2542 [1]	9.3 @ 3696
		57-2503 [1]	5.3 @ 3654
F250	5.8L V8 F/I	57-2503 [1]	5.3 @ 3654
F250	7.5L V8 F/I	57-2503 [1]	5.3 @ 3654
F350	7.5L V8 F/I	57-2503 [1]	5.3 @ 3654
Mustang	5.0L V8 F/I	57-2502 [1]	6.8 @ 4706
Thunderbird	3.8L V6 F/I - exc. S/C	57-2505-1 [1]	4.7 @ 3418
1991 FORD			
Bronco	5.0L V8 F/I	57-2542 [1]	9.3 @ 3696
		57-2503 [1]	5.3 @ 3654
Bronco	5.8L V8 F/I	57-2542 [1]	9.3 @ 3696
		57-2503 [1]	5.3 @ 3654
Escort	1.8L L4 F/I	57-2500 [1]	
F150	4.9L L6 F/I	57-2503 [1]	5.3 @ 3654
F150	5.0L V8 F/I	57-2542 [1]	9.3 @ 3696
		57-2503 [1]	5.3 @ 3654
F150	5.8L V8 F/I	57-2542 [1]	9.3 @ 3696
		57-2503 [1]	5.3 @ 3654
F250	5.8L V8 F/I	57-2503 [1]	5.3 @ 3654
F250	7.5L V8 F/I	57-2503 [1]	5.3 @ 3654
F350	7.5L V8 F/I	57-2503 [1]	5.3 @ 3654
Mustang	5.0L V8 F/I	57-2502 [1]	6.8 @ 4706
Thunderbird	3.8L V6 F/I - exc. S/C	57-2505-1 [1]	4.7 @ 3418
Thunderbird	5.0L V8 F/I	57-2505-1 [1]	4.7 @ 3418
1990 FORD			
Bronco	5.0L V8 F/I	57-2542 [1]	9.3 @ 3696
		57-2503 [1]	5.3 @ 3654
Bronco	5.8L V8 F/I	57-2542 [1]	9.3 @ 3696
		57-2503 [1]	5.3 @ 3654
F150	4.9L L6 F/I	57-2503 [1]	5.3 @ 3654
F150	5.0L V8 F/I	57-2542 [1]	9.3 @ 3696
		57-2503 [1]	5.3 @ 3654
F150	5.8L V8 F/I	57-2542 [1]	9.3 @ 3696
		57-2503 [1]	5.3 @ 3654
F250	5.8L V8 F/I	57-2503 [1]	5.3 @ 3654
F250	7.5L V8 F/I	57-2503 [1]	5.3 @ 3654
F350	5.8L V8 F/I	57-2503 [1]	5.3 @ 3654
F350	7.5L V8 F/I	57-2503 [1]	5.3 @ 3654
Mustang	5.0L V8 F/I	57-2502 [1]	6.8 @ 4706
1989 FORD			
Bronco	5.0L V8 F/I - w/o mass air	57-2542 [1]	9.3 @ 3696
		57-2503 [1]	5.3 @ 3654
Bronco	5.8L V8 F/I - w/o mass air	57-2542 [1]	9.3 @ 3696
		57-2503 [1]	5.3 @ 3654
F150	4.9L L6 F/I - w/o mass air	57-2503 [1]	5.3 @ 3654
F150	5.0L V8 F/I - w/o mass air	57-2542 [1]	9.3 @ 3696
		57-2503 [1]	5.3 @ 3654
F150	5.8L V8 F/I - w/o mass air	57-2542 [1]	9.3 @ 3696
		57-2503 [1]	5.3 @ 3654
F250	5.0L V8 F/I - w/o mass air	57-2542 [1]	9.3 @ 3696
		57-2503 [1]	5.3 @ 3654
F250	5.8L V8 F/I - w/o mass air	57-2503 [1]	5.3 @ 3654
F250	7.5L V8 F/I - w/o mass air	57-2503 [1]	5.3 @ 3654
F350	7.5L V8 F/I - w/o mass air	57-2503 [1]	5.3 @ 3654
Mustang	5.0L V8 F/I	57-2502 [1]	6.8 @ 4706
1988 FORD			
Bronco	5.0L V8 F/I - w/o mass air	57-2542 [1]	9.3 @ 3696
		57-2503 [1]	5.3 @ 3654
Bronco	5.8L V8 F/I - w/o mass air	57-2542 [1]	9.3 @ 3696
		57-2503 [1]	5.3 @ 3654
F150	4.9L L6 F/I - w/o mass air	57-2503 [1]	5.3 @ 3654
F150	5.0L V8 F/I - w/o mass air	57-2542 [1]	9.3 @ 3696
		57-2503 [1]	5.3 @ 3654
F150	5.8L V8 F/I - w/o mass air	57-2542 [1]	9.3 @ 3696
		57-2503 [1]	5.3 @ 3654
F250	5.0L V8 F/I - w/o mass air	57-2503 [1]	5.3 @ 3654
F250	5.8L V8 F/I - w/o mass air	57-2503 [1]	5.3 @ 3654
F250	7.5L V8 F/I - w/o mass air	57-2503 [1]	5.3 @ 3654
F350	7.5L V8 F/I - w/o mass air	57-2503 [1]	5.3 @ 3654
Mustang	5.0L V8 F/I - w/mass air	57-2502 [1]	6.8 @ 4706

1) Street legal in all US states. 2) Street legal in most states, but not legal for use in California or other states with similar emission control regulations.
* Estimated horsepower gains are based on specific or similar vehicle dyno tests. Results will vary. See Page 479 for more information.
Partial Listing - Complete List of Vehicles and Applications at knfilters.com. See page 5 for information on intake tube materials/colors.

AIR INTAKE SYSTEMS

Vehicle	Engine Type	Intake Kit	Estimated Horsepower*
1988 FORD			
Mustang	5.0L V8 F/I - w/o mass air	57-2501 [1]	
1987 FORD			
Mustang	5.0L V8 F/I	57-2501 [1]	
1986 FORD			
Mustang	5.0L V8 F/I	57-2501 [1]	
2013 GMC			
Sierra 1500	5.3L V8 F/I	77-3070KP [2]	9.9 @ 5342
		63-3070 [2]	10.3 @ 5342
Sierra Denali	6.2L V8 F/I	77-3070KP [2]	9.9 @ 5342
		63-3070 [2]	10.3 @ 5342
Terrain	2.4L L4 F/I	77-3071KS [2]	9.3 @ 4600
Yukon Denali	6.2L V8 F/I	77-3070KP [2]	9.9 @ 5342
		63-3070 [2]	10.3 @ 5342
Yukon Denali XL	6.2L V8 F/I	77-3070KP [2]	9.9 @ 5342
		63-3070 [2]	10.3 @ 5342
Yukon XL 1500	5.3L V8 F/I	63-3070 [2]	10.3 @ 5342
2012 GMC			
Canyon	2.9L L4 F/I	63-3064-1 [2]	9.0 @ 4862
Canyon	3.7L L5 F/I	77-3065KP [2]	7.2 @ 4533
		63-3065 [2]	11.0 @ 4754
Sierra 1500	4.8L V8 F/I	77-3070KP [2]	9.9 @ 5342
		63-3070 [2]	10.3 @ 5342
Sierra 1500	5.3L V8 F/I	77-3070KP [2]	9.9 @ 5342
		63-3070 [2]	10.3 @ 5342
Sierra 1500	6.2L V8 F/I	77-3070KP [2]	9.9 @ 5342
		63-3070 [2]	10.3 @ 5342
Sierra 2500 HD	6.0L V8 F/I	77-3076KTK [2]	10.2 @ 5033
Sierra 2500 HD	6.6L V8 DSL	63-3077 [2]	19.3 @ 2420
Sierra 3500 HD	6.0L V8 F/I	77-3076KTK [2]	10.2 @ 5033
Sierra 3500 HD	6.6L V8 DSL	63-3077 [2]	19.3 @ 2420
Terrain	2.4L L4 F/I	77-3071KS [2]	9.3 @ 4600
Yukon	5.3L V8 F/I	77-3070KP [2]	9.9 @ 5342
		63-3070 [2]	10.3 @ 5342
Yukon Denali	6.2L V8 F/I	77-3070KP [2]	9.9 @ 5342
		63-3070 [2]	10.3 @ 5342
Yukon Denali XL	6.2L V8 F/I	77-3070KP [2]	9.9 @ 5342
		63-3070 [2]	10.3 @ 5342
Yukon XL 1500	5.3L V8 F/I	77-3070KP [2]	9.9 @ 5342
		63-3070 [2]	10.3 @ 5342
2011 GMC			
Canyon	2.9L L4 F/I	63-3064-1 [2]	9.0 @ 4862
Canyon	3.7L L5 F/I	77-3065KP [2]	7.2 @ 4533
		63-3065 [2]	11.0 @ 4754
Sierra 1500	4.8L V8 F/I	77-3070KP [2]	9.9 @ 5342
		63-3070 [2]	10.3 @ 5342
Sierra 1500	5.3L V8 F/I	77-3070KP [2]	9.9 @ 5342
		63-3070 [2]	12.8 @ 5342
Sierra 1500	6.2L V8 F/I	77-3070KP [2]	9.9 @ 5342
		63-3070 [2]	10.3 @ 5342
Sierra 2500 HD	6.0L V8 F/I	77-3076KTK [2]	10.2 @ 5033
Sierra 2500 HD	6.6L V8 DSL	63-3077 [2]	19.3 @ 2420
Sierra 3500 HD	6.0L V8 F/I	77-3076KTK [2]	10.2 @ 5033
Sierra 3500 HD	6.6L V8 DSL	63-3077 [2]	19.3 @ 2420
Sierra Denali	6.2L V8 F/I	77-3070KP [2]	9.9 @ 5342
		63-3070 [2]	10.3 @ 5342
Terrain	2.4L L4 F/I	77-3071KS [2]	9.3 @ 4600
2011 GMC			
Yukon	4.8L V8 F/I	63-3070 [2]	10.3 @ 5342
Yukon	5.3L V8 F/I	77-3070KP [2]	9.9 @ 5342
		63-3070 [2]	10.3 @ 5342
Yukon Denali	6.2L V8 F/I	77-3070KP [2]	9.9 @ 5342
		63-3070 [2]	10.3 @ 5342
Yukon Denali XL	6.2L V8 F/I	77-3070KP [2]	9.9 @ 5342
		63-3070 [2]	10.3 @ 5342
Yukon XL 1500	5.3L V8 F/I	77-3070KP [2]	9.9 @ 5342
		63-3070 [2]	10.3 @ 5342
Yukon XL 1500	6.2L V8 F/I	77-3070KP [2]	9.9 @ 5342
		63-3070 [2]	10.3 @ 5342
2010 GMC			
Canyon	2.9L L4 F/I	63-3064-1 [2]	9.0 @ 4862
Canyon	3.7L L5 F/I	77-3065KP [2]	7.2 @ 4533
		63-3065 [2]	11.0 @ 4754
Sierra 1500	4.8L V8 F/I	77-3070KP [2]	9.9 @ 5342
		63-3070 [2]	10.3 @ 5342
Sierra 1500	5.3L V8 F/I	77-3070KP [2]	9.9 @ 5342
		63-3070 [2]	10.3 @ 5342
Sierra 1500	6.2L V8 F/I	77-3070KP [2]	9.9 @ 5342
		63-3070 [2]	10.3 @ 5342
Sierra 2500 HD	6.0L V8 F/I	63-3076 [2]	
Sierra 2500 HD	6.6L V8 DSL	57-3066 [1]	19.7 @ 2900
Sierra 3500 HD	6.6L V8 DSL	57-3066 [1]	19.7 @ 2900
Sierra Denali	6.2L V8 F/I	77-3070KP [2]	9.9 @ 5342
		63-3070 [2]	10.3 @ 5342
Terrain	2.4L L4 F/I	77-3071KS [2]	9.3 @ 4600
Yukon	5.3L V8 F/I	77-3070KP [2]	9.9 @ 5342
		63-3070 [2]	10.3 @ 5342
Yukon Denali	6.2L V8 F/I	77-3070KP [2]	9.9 @ 5342
		63-3070 [2]	10.3 @ 5342
Yukon Denali XL	6.2L V8 F/I	77-3070KP [2]	9.9 @ 5342
		63-3070 [2]	10.3 @ 5342
Yukon XL 1500	5.3L V8 F/I	77-3070KP [2]	9.9 @ 5342
		63-3070 [2]	10.3 @ 5342
Yukon XL 1500	6.2L V8 F/I	63-3070 [2]	10.3 @ 5342
2009 GMC			
Canyon	2.9L L4 F/I	63-3064-1 [2]	9.0 @ 4862
Canyon	3.7L L5 F/I	77-3065KP [2]	7.2 @ 4533
		63-3065 [2]	11.0 @ 4754
Envoy	4.2L L6 F/I	77-3062KP [2]	9.3 @ 4850
		63-3062 [2]	9.5 @ 4725
Sierra 1500	4.8L V8 F/I	77-3070KP [2]	9.9 @ 5342
		63-3070 [2]	10.3 @ 5342
Sierra 1500	5.3L V8 F/I	77-3070KP [2]	9.9 @ 5342
		63-3070 [2]	10.3 @ 5342
Sierra 1500	6.0L V8 F/I	77-3070KP [2]	9.9 @ 5342
		63-3070 [2]	10.3 @ 5342
Sierra 1500	6.2L V8 F/I	77-3070KP [2]	9.9 @ 5342
		63-3070 [2]	10.3 @ 5342
Sierra 2500 HD	6.0L V8 F/I	63-3076 [2]	
Sierra 2500 HD	6.6L V8 DSL	57-3066 [1]	19.7 @ 2900
Sierra 3500 HD	6.6L V8 DSL	57-3066 [1]	19.7 @ 2900
Sierra Denali	6.2L V8 F/I	77-3070KP [2]	9.9 @ 5342
		63-3070 [2]	10.3 @ 5342
Yukon	4.8L V8 F/I	63-3070 [2]	10.3 @ 5342
Yukon	5.3L V8 F/I	77-3070KP [2]	9.9 @ 5342
		63-3070 [2]	10.3 @ 5342

1) Street legal in all US states. 2) Street legal in most states, but not legal for use in California or other states with similar emission control regulations.
* Estimated horsepower gains are based on specific or similar vehicle dyno tests. Results will vary. See Page 479 for more information.
Partial Listing - Complete List of Vehicles and Applications at knfilters.com. See page 5 for information on intake tube materials/colors.

Vehicle	Engine Type	Intake Kit	Estimated Horsepower*
2009 GMC			
Yukon Denali	6.2L V8 F/I	77-3070KP [2]	9.9 @ 5342
		63-3070 [2]	10.3 @ 5342
Yukon Denali XL	6.2L V8 F/I	77-3070KP [2]	9.9 @ 5342
		63-3070 [2]	10.3 @ 5342
Yukon XL 1500	5.3L V8 F/I	77-3070KP [2]	9.9 @ 5342
		63-3070 [2]	10.3 @ 5342
Yukon XL 1500	6.0L V8 F/I	63-3070 [2]	10.3 @ 5342
2008 GMC			
Canyon	2.9L L4 F/I	63-3064-1 [2]	9.0 @ 4862
Canyon	3.7L L5 F/I	77-3065KP [2]	7.2 @ 4533
		63-3065 [2]	11.0 @ 4754
Envoy	4.2L L6 F/I	77-3062KP [2]	9.3 @ 4850
		63-3062 [2]	9.5 @ 4725
Sierra 1500	4.8L V8 F/I	77-3058KP [1]	12.5 @ 4917
		57-3058 [1]	17.6 @ 4917
Sierra 1500	5.3L V8 F/I	77-3058KP [1]	12.5 @ 4917
		57-3058 [1]	17.6 @ 4917
Sierra 1500	6.0L V8 F/I	77-3058KP [1]	12.5 @ 4917
		57-3058 [1]	17.6 @ 4917
Sierra 2500 HD	6.0L V8 F/I	63-3067 [2]	11.4 @ 4500
		57-3067 [1]	11.4 @ 4500
Sierra 2500 HD	6.6L V8 DSL	57-3066 [1]	19.7 @ 2900
Sierra 3500 HD	6.0L V8 F/I	63-3067 [2]	11.4 @ 4500
		57-3067 [1]	11.4 @ 4500
Sierra 3500 HD	6.6L V8 DSL	57-3066 [1]	19.7 @ 2900
Sierra Denali	6.2L V8 F/I	77-3058KP [1]	12.5 @ 4917
		57-3058 [1]	17.6 @ 4917
Yukon	4.8L V8 F/I	57-3058 [1]	17.6 @ 4917
Yukon	5.3L V8 F/I	77-3058KP [1]	12.5 @ 4917
		57-3058 [1]	17.6 @ 4917
Yukon Denali	6.2L V8 F/I	77-3058KP [1]	12.5 @ 4917
		57-3058 [1]	17.6 @ 4917
Yukon Denali XL	6.2L V8 F/I	77-3058KP [1]	12.5 @ 4917
		57-3058 [1]	17.6 @ 4917
Yukon XL 1500	5.3L V8 F/I	77-3058KP [1]	12.5 @ 4917
		57-3058 [1]	17.6 @ 4917
Yukon XL 1500	6.0L V8 F/I	57-3058 [1]	17.6 @ 4917
Yukon XL 1500	6.2L V8 F/I	57-3058 [1]	17.6 @ 4917
2007 GMC			
Canyon	2.9L L4 F/I	63-3064-1 [2]	9.0 @ 4862
Canyon	3.7L L5 F/I	77-3065KP [2]	7.2 @ 4533
		63-3065 [2]	11.0 @ 4754
Envoy	4.2L L6 F/I	77-3062KP [2]	9.3 @ 4850
		63-3062 [2]	9.5 @ 4725
Sierra 1500	4.8L V8 F/I	77-3058KP [1]	12.5 @ 4917
		57-3058 [1]	17.6 @ 4917
Sierra 1500	5.3L V8 F/I	77-3058KP [1]	12.5 @ 4917
		57-3058 [1]	17.6 @ 4917
Sierra 1500	6.0L V8 F/I	77-3058KP [1]	12.5 @ 4917
		57-3058 [1]	17.6 @ 4917
Sierra 1500 Classic	4.3L V6 F/I	57-3038 [1]	8.2 @ 4544
Sierra 1500 Classic	4.8L V8 F/I	77-3050KP [1]	8.4 @ 5336
		57-3050 [1]	11.9 @ 5367
Sierra 1500 Classic	5.3L V8 F/I	77-3050KP [1]	8.4 @ 5336
		57-3050 [1]	11.9 @ 5367
Sierra 1500 HD Classic	6.0L V8 F/I	77-3023KP [1]	8.2 @ 5067
2007 GMC			
Sierra 1500 HD Classic	6.0L V8 F/I	57-3023-1 [1]	14.3 @ 5018
Sierra 2500 HD	6.0L V8 F/I	63-3067 [2]	11.4 @ 4500
		57-3067 [1]	11.4 @ 4500
Sierra 2500 HD	6.6L V8 DSL	57-3066 [1]	19.7 @ 2900
Sierra 2500 HD Classic	6.0L V8 F/I	77-3031KP [1]	17.5 @ 5024
		57-3031-1 [1]	20.3 @ 4894
Sierra 2500 HD Classic	6.6L V8 DSL	57-3057 [1]	22.1 @ 2860
		57-3000 [1]	15.4 @ 2911
Sierra 2500 HD Classic	8.1L V8 F/I	63-3030 [2]	17.3 @ 4559
		57-3030-1 [1]	17.3 @ 4559
Sierra 3500 Classic	6.6L V8 DSL	57-3057 [1]	22.1 @ 2860
		57-3000 [1]	15.4 @ 2911
Sierra 3500 Classic	8.1L V8 F/I	57-3030-1 [1]	17.3 @ 4559
Sierra 3500 HD	6.6L V8 DSL	57-3066 [1]	19.7 @ 2900
Sierra Denali	6.2L V8 F/I	77-3058KP [1]	12.5 @ 4917
		57-3058 [1]	17.6 @ 4917
Sierra Denali Classic	6.0L V8 F/I	77-3050KP [1]	8.4 @ 5336
		57-3050 [1]	11.9 @ 5367
Yukon	4.8L V8 F/I	77-3058KP [1]	12.5 @ 4917
		57-3058 [1]	17.6 @ 4917
Yukon	5.3L V8 F/I	77-3058KP [1]	12.5 @ 4917
		57-3058 [1]	17.6 @ 4917
Yukon Denali	6.2L V8 F/I	77-3058KP [1]	12.5 @ 4917
		57-3058 [1]	17.6 @ 4917
Yukon Denali XL	6.2L V8 F/I	77-3058KP [1]	12.5 @ 4917
		57-3058 [1]	17.6 @ 4917
Yukon XL 1500	5.3L V8 F/I	77-3058KP [1]	12.5 @ 4917
		57-3058 [1]	17.6 @ 4917
Yukon XL 1500	6.0L V8 F/I	77-3058KP [1]	12.5 @ 4917
		57-3058 [1]	17.6 @ 4917
Yukon XL 1500	6.2L V8 F/I	77-3058KP [1]	12.5 @ 4917
		57-3058 [1]	17.6 @ 4917
Yukon XL 2500	6.0L V8 F/I	57-3063 [1]	11.6 @ 5075
2006 GMC			
Canyon	2.8L L4 F/I	57-3051 [1]	11.5 @ 5863
Canyon	3.5L L5 F/I	77-3043KP [1]	9.2 @ 6057
		57-3043 [1]	18.6 @ 6001
Envoy	4.2L L6 F/I	77-3062KP [1]	9.3 @ 4850
		57-3062 [1]	9.5 @ 4725
Sierra 1500	4.3L V6 F/I	57-3038 [1]	8.2 @ 4544
Sierra 1500	4.8L V8 F/I	77-3050KP [1]	8.4 @ 5336
		57-3050 [1]	11.9 @ 5367
Sierra 1500	5.3L V8 F/I	77-3050KP [1]	8.4 @ 5336
		57-3050 [1]	11.9 @ 5367
Sierra 1500	6.0L V8 F/I	77-3050KP [1]	8.4 @ 5336
		57-3050 [1]	11.9 @ 5367
Sierra 1500 HD	6.0L V8 F/I	77-3023KP [1]	8.2 @ 5067
		57-3023-1 [1]	14.3 @ 5018
Sierra 2500 HD	6.0L V8 F/I	77-3031KP [1]	17.5 @ 5024
		57-3031-1 [1]	20.3 @ 4894
Sierra 2500 HD	6.6L V8 DSL	57-3057 [1]	22.1 @ 2860

1) Street legal in all US states. 2) Street legal in most states, but not legal for use in California or other states with similar emission control regulations.
* Estimated horsepower gains are based on specific or similar vehicle dyno tests. Results will vary. See Page 479 for more information.
Partial Listing - Complete List of Vehicles and Applications at knfilters.com. See page 5 for information on intake tube materials/colors.

AIR INTAKE SYSTEMS

Vehicle	Engine Type	Intake Kit	Estimated Horsepower*
2006 GMC			
Sierra 2500 HD	6.6L V8 DSL	57-3000 [1]	15.4 @ 2911
Sierra 2500 HD	8.1L V8 F/I	57-3030-1 [1]	17.3 @ 4559
Sierra 3500	6.0L V8 F/I	57-3031-1 [1]	20.3 @ 4894
Sierra 3500	6.6L V8 DSL	57-3057 [1]	22.1 @ 2860
		57-3000 [1]	15.4 @ 2911
Sierra 3500	8.1L V8 F/I	57-3030-1 [1]	17.3 @ 4559
Sierra Denali	6.0L V8 F/I	77-3050KP [1]	8.4 @ 5336
		57-3050 [1]	11.9 @ 5367
Yukon	4.8L V8 F/I	77-3050KP [1]	8.4 @ 5336
		57-3050 [1]	11.9 @ 5367
Yukon	5.3L V8 F/I	77-3050KP [1]	8.4 @ 5336
		57-3050 [1]	11.9 @ 5367
Yukon Denali	6.0L V8 F/I	77-3050KP [1]	8.4 @ 5336
		57-3050 [1]	11.9 @ 5367
Yukon Denali XL	6.0L V8 F/I	77-3050KP [1]	8.4 @ 5336
		57-3050 [1]	11.9 @ 5367
Yukon XL 1500	5.3L V8 F/I	77-3050KP [1]	8.4 @ 5336
		57-3050 [1]	11.9 @ 5367
Yukon XL 2500	6.0L V8 F/I	57-3023-1 [1]	14.3 @ 5018
Yukon XL 2500	8.1L V8 F/I	57-3032 [1]	13.0 @ 4231
2005 GMC			
Canyon	2.8L L4 F/I	57-3051 [1]	11.5 @ 5863
Canyon	3.5L L5 F/I	77-3043KP [1]	9.2 @ 6057
		57-3043 [1]	18.6 @ 6001
Envoy	4.2L L6 F/I	77-3036KP [1]	10.9 @ 5474
		57-3036 [1]	9.3 @ 5623
Envoy	5.3L V8 F/I	57-3048 [1]	19.3 @ 5133
Sierra 1500	4.3L V6 F/I	57-3038 [1]	8.2 @ 4544
Sierra 1500	4.8L V8 F/I	77-3050KP [1]	8.4 @ 5336
		57-3050 [1]	11.9 @ 5367
Sierra 1500	5.3L V8 F/I	77-3050KP [1]	8.4 @ 5336
		57-3050 [1]	11.9 @ 5367
Sierra 1500 HD	6.0L V8 F/I	77-3023KP [1]	8.2 @ 5067
		57-3023-1 [1]	14.3 @ 5018
Sierra 2500 HD	6.0L V8 F/I	77-3031KP [1]	17.5 @ 5024
		57-3031-1 [1]	20.3 @ 4894
Sierra 2500 HD	6.6L V8 DSL - w/Panel Filter	77-3047KP [1]	20.2 @ 3158
		57-3047 [1]	20.1 @ 3157
Sierra 2500 HD	6.6L V8 DSL - w/Round Filter	57-3057 [1]	22.1 @ 2860
		57-3000 [1]	15.4 @ 2911
Sierra 2500 HD	8.1L V8 F/I	57-3030-1 [1]	17.3 @ 4559
Sierra 3500	6.0L V8 F/I	57-3031-1 [1]	20.3 @ 4894
Sierra 3500	6.6L V8 DSL - w/Panel Filter	77-3047KP [1]	20.2 @ 3158
		57-3047 [1]	20.1 @ 3157
Sierra 3500	6.6L V8 DSL - w/Round Filter	57-3057 [1]	22.1 @ 2860
		57-3000 [1]	15.4 @ 2911
Sierra 3500	8.1L V8 F/I	57-3030-1 [1]	17.3 @ 4559
Sierra Denali	6.0L V8 F/I	77-3050KP [1]	8.4 @ 5336
		57-3050 [1]	11.9 @ 5367
Yukon	4.8L V8 F/I	77-3050KP [1]	8.4 @ 5336
		57-3050 [1]	11.9 @ 5367
Yukon	5.3L V8 F/I	77-3050KP [1]	8.4 @ 5336
		57-3050 [1]	11.9 @ 5367
Yukon Denali	6.0L V8 F/I	77-3050KP [1]	8.4 @ 5336
2005 GMC			
Yukon Denali	6.0L V8 F/I	57-3050 [1]	11.9 @ 5367
Yukon Denali XL	6.0L V8 F/I	77-3050KP [1]	8.4 @ 5336
		57-3050 [1]	11.9 @ 5367
Yukon XL 1500	5.3L V8 F/I	77-3050KP [1]	8.4 @ 5336
		57-3050 [1]	11.9 @ 5367
Yukon XL 2500	6.0L V8 F/I	77-3023KP [1]	8.2 @ 5067
		57-3023-1 [1]	14.3 @ 5018
Yukon XL 2500	8.1L V8 F/I	57-3032 [1]	13.0 @ 4231
2004 GMC			
Canyon	2.8L L4 F/I	57-3051 [1]	11.5 @ 5863
Canyon	3.5L L5 F/I	77-3043KP [1]	9.2 @ 6057
		57-3043 [1]	18.6 @ 6001
Envoy	4.2L L6 F/I	77-3036KP [1]	10.9 @ 5474
		57-3036 [1]	9.3 @ 5623
Envoy	5.3L V8 F/I	57-3048 [1]	19.3 @ 5133
Sierra 1500	4.3L V6 F/I	57-3038 [1]	8.2 @ 4544
Sierra 1500	4.8L V8 F/I	77-3021KP [1]	8.2 @ 5067
		57-3021-1 [1]	9.1 @ 5352
Sierra 1500	5.3L V8 F/I	77-3021KP [1]	8.2 @ 5067
		57-3021-1 [1]	9.1 @ 5352
Sierra 2500	6.0L V8 F/I	77-3023KP [1]	8.2 @ 5067
		57-3023-1 [1]	14.3 @ 5018
Sierra 2500 HD	6.0L V8 F/I	77-3031KP [1]	17.5 @ 5024
		57-3031-1 [1]	20.3 @ 4894
Sierra 2500 HD	6.6L V8 DSL - LB7	77-3034KP [1]	12.6 @ 3246
		57-3034 [1]	16.3 @ 2750
Sierra 2500 HD	6.6L V8 DSL - LLY	77-3047KP [1]	20.2 @ 3158
		57-3047 [1]	20.1 @ 3157
Sierra 2500 HD	8.1L V8 F/I	57-3030-1 [1]	17.3 @ 4559
Sierra 3500	6.0L V8 F/I	57-3031-1 [1]	20.3 @ 4894
Sierra 3500	6.6L V8 DSL - LB7	77-3034KP [1]	12.6 @ 3246
		57-3034 [1]	16.3 @ 2750
Sierra 3500	6.6L V8 DSL - LLY	77-3047KP [1]	20.2 @ 3158
		57-3047 [1]	20.1 @ 3157
Sierra 3500	8.1L V8 F/I	57-3030-1 [1]	17.3 @ 4559
Sierra Denali	6.0L V8 F/I	77-3023KP [1]	8.2 @ 5067
		57-3023-1 [1]	14.3 @ 5018
Sonoma	4.3L V6 F/I	57-3017-2 [1]	7.4 @ 4671
Yukon	4.8L V8 F/I	77-3023KP [1]	8.2 @ 5067
		57-3023-1 [1]	14.3 @ 5018
Yukon	5.3L V8 F/I	77-3023KP [1]	8.2 @ 5067
		57-3023-1 [1]	14.3 @ 5018
Yukon Denali	6.0L V8 F/I	77-3023KP [1]	8.2 @ 5067
		57-3023-1 [1]	14.3 @ 5018
Yukon Denali XL	6.0L V8 F/I	77-3023KP [1]	8.2 @ 5067
		57-3023-1 [1]	14.3 @ 5018
Yukon XL 1500	5.3L V8 F/I	77-3023KP [1]	8.2 @ 5067
		57-3023-1 [1]	14.3 @ 5018
Yukon XL 2500	6.0L V8 F/I	77-3023KP [1]	8.2 @ 5067
		57-3023-1 [1]	14.3 @ 5018
Yukon XL 2500	8.1L V8 F/I	57-3032 [1]	13.0 @ 4231
2003 GMC			
Envoy	4.2L L6 F/I	77-3036KP [1]	10.9 @ 5474
		57-3036 [1]	9.3 @ 5623
Envoy	5.3L V8 F/I	57-3048 [1]	19.3 @ 5133
Sierra 1500	4.3L V6 F/I	57-3038 [1]	8.2 @ 4544
Sierra 1500	4.8L V8 F/I	77-3021KP [1]	8.2 @ 5067
		57-3021-1 [1]	9.1 @ 5352

1) Street legal in all US states. 2) Street legal in most states, but not legal for use in California or other states with similar emission control regulations.
* Estimated horsepower gains are based on specific or similar vehicle dyno tests. Results will vary. See Page 479 for more information.
Partial Listing - Complete List of Vehicles and Applications at knfilters.com. See page 5 for information on intake tube materials/colors.

Vehicle	Engine Type	Intake Kit	Estimated Horsepower*
2003 GMC			
Sierra 1500	5.3L V8 F/I	77-3021KP [1]	8.2 @ 5067
		57-3021-1 [1]	9.1 @ 5352
Sierra 1500 HD	6.0L V8 F/I	77-3023KP [1]	8.2 @ 5067
		57-3023-1 [1]	14.3 @ 5018
Sierra 2500	6.0L V8 F/I	77-3023KP [1]	8.2 @ 5067
		57-3023-1 [1]	14.3 @ 5018
Sierra 2500 HD	6.0L V8 F/I	77-3031KP [1]	17.5 @ 5024
		57-3031-1 [1]	20.3 @ 4894
Sierra 2500 HD	6.6L V8 DSL	77-3034KP [1]	12.6 @ 3246
		57-3034 [1]	16.3 @ 2750
Sierra 2500 HD	8.1L V8 F/I	57-3030-1 [1]	17.3 @ 4559
Sierra 3500	6.0L V8 F/I	57-3031-1 [1]	20.3 @ 4894
Sierra 3500	6.6L V8 DSL	77-3034KP [1]	12.6 @ 3246
		57-3034 [1]	16.3 @ 2750
Sierra 3500	8.1L V8 F/I	57-3030-1 [1]	17.3 @ 4559
Sierra Denali	6.0L V8 F/I	77-3023KP [1]	8.2 @ 5067
		57-3023-1 [1]	14.3 @ 5018
Sonoma	2.2L L4 F/I	57-3025-1 [1]	6.7 @ 4700
Sonoma	4.3L V6 F/I	57-3017-2 [1]	7.4 @ 4671
Yukon	4.8L V8 F/I	77-3023KP [1]	8.2 @ 5067
		57-3023-1 [1]	14.3 @ 5018
Yukon	5.3L V8 F/I	77-3023KP [1]	8.2 @ 5067
		57-3023-1 [1]	14.3 @ 5018
Yukon Denali	6.0L V8 F/I	77-3023KP [1]	8.2 @ 5067
		57-3023-1 [1]	14.3 @ 5018
Yukon Denali XL	6.0L V8 F/I	77-3023KP [1]	8.2 @ 5067
		57-3023-1 [1]	14.3 @ 5018
Yukon XL 1500	5.3L V8 F/I	77-3023KP [1]	8.2 @ 5067
		57-3023-1 [1]	14.3 @ 5018
Yukon XL 2500	6.0L V8 F/I	77-3023KP [1]	8.2 @ 5067
		57-3023-1 [1]	14.3 @ 5018
Yukon XL 2500	8.1L V8 F/I	57-3032 [1]	13.0 @ 4231
2002 GMC			
Envoy	4.2L L6 F/I	77-3036KP [1]	10.9 @ 5474
		57-3036 [1]	9.3 @ 5623
Sierra 1500	4.3L V6 F/I	57-3038 [1]	8.2 @ 4544
Sierra 1500	4.8L V8 F/I	77-3021KP [1]	8.2 @ 5067
		57-3021-1 [1]	9.1 @ 5352
Sierra 1500	5.3L V8 F/I	77-3021KP [1]	8.2 @ 5067
		57-3021-1 [1]	9.1 @ 5352
Sierra 1500 HD	6.0L V8 F/I	77-3023KP [1]	8.2 @ 5067
		57-3023-1 [1]	14.3 @ 5018
Sierra 2500	6.0L V8 F/I	77-3023KP [1]	8.2 @ 5067
		57-3023-1 [1]	14.3 @ 5018
Sierra 2500 HD	6.0L V8 F/I	77-3031KP [1]	17.5 @ 5024
		57-3031-1 [1]	20.3 @ 4894
Sierra 2500 HD	6.6L V8 DSL	77-3034KP [1]	12.6 @ 3246
		57-3034 [1]	16.3 @ 2750
Sierra 2500 HD	8.1L V8 F/I	57-3030-1 [1]	17.3 @ 4559
Sierra 3500	6.0L V8 F/I	57-3031-1 [1]	20.3 @ 4894
Sierra 3500	6.6L V8 DSL	77-3034KP [1]	12.6 @ 3246
		57-3034 [1]	16.3 @ 2750
Sierra 3500	8.1L V8 F/I	57-3030-1 [1]	17.3 @ 4559
Sierra Denali	6.0L V8 F/I	77-3023KP [1]	8.2 @ 5067
		57-3023-1 [1]	14.3 @ 5018
Sonoma	2.2L L4 F/I	57-3025-1 [1]	6.7 @ 4700
Sonoma	4.3L V6 F/I	57-3017-2 [1]	7.4 @ 4671
Yukon	4.8L V8 F/I	77-3023KP [1]	8.2 @ 5067
Yukon	4.8L V8 F/I	57-3023-1 [1]	14.3 @ 5018
Yukon	5.3L V8 F/I	77-3023KP [1]	8.2 @ 5067
		57-3023-1 [1]	14.3 @ 5018
Yukon Denali	6.0L V8 F/I	77-3023KP [1]	8.2 @ 5067
		57-3023-1 [1]	14.3 @ 5018
Yukon Denali XL	6.0L V8 F/I	77-3023KP [1]	8.2 @ 5067
		57-3023-1 [1]	14.3 @ 5018
Yukon XL 1500	5.3L V8 F/I	77-3023KP [1]	8.2 @ 5067
		57-3023-1 [1]	14.3 @ 5018
Yukon XL 2500	6.0L V8 F/I	77-3023KP [1]	8.2 @ 5067
		57-3023-1 [1]	14.3 @ 5018
Yukon XL 2500	8.1L V8 F/I	57-3032 [1]	13.0 @ 4231
2001 GMC			
Jimmy	4.3L V6 F/I	57-3017-2 [1]	7.4 @ 4671
Sierra 1500	4.3L V6 F/I	57-3038 [1]	8.2 @ 4544
Sierra 1500	4.8L V8 F/I	77-3021KP [1]	8.2 @ 5067
		57-3021-1 [1]	9.1 @ 5352
Sierra 1500	5.3L V8 F/I	77-3021KP [1]	8.2 @ 5067
		57-3021-1 [1]	9.1 @ 5352
Sierra 1500 HD	6.0L V8 F/I	77-3023KP [1]	8.2 @ 5067
		57-3023-1 [1]	14.3 @ 5018
Sierra 2500	6.0L V8 F/I	77-3023KP [1]	8.2 @ 5067
		57-3023-1 [1]	14.3 @ 5018
Sierra 2500 HD	6.0L V8 F/I	77-3031KP [1]	17.5 @ 5024
		57-3031-1 [1]	20.3 @ 4894
Sierra 2500 HD	6.6L V8 DSL	77-3034KP [1]	12.6 @ 3246
		57-3034 [1]	16.3 @ 2750
Sierra 2500 HD	8.1L V8 F/I	57-3030-1 [1]	17.3 @ 4559
Sierra 3500	6.6L V8 DSL	57-3034 [1]	16.3 @ 2750
Sierra 3500	8.1L V8 F/I	57-3030-1 [1]	17.3 @ 4559
Sierra C3	6.0L V8 F/I	77-3023KP [1]	8.2 @ 5067
		57-3023-1 [1]	14.3 @ 5018
Sonoma	2.2L L4 F/I	57-3025-1 [1]	6.7 @ 4700
Sonoma	4.3L V6 F/I	57-3017-2 [1]	7.4 @ 4671
Yukon	4.8L V8 F/I	77-3023KP [1]	8.2 @ 5067
		57-3023-1 [1]	14.3 @ 5018
Yukon	5.3L V8 F/I	77-3023KP [1]	8.2 @ 5067
		57-3023-1 [1]	14.3 @ 5018
Yukon Denali	6.0L V8 F/I	77-3023KP [1]	8.2 @ 5067
		57-3023-1 [1]	14.3 @ 5018
Yukon Denali XL	6.0L V8 F/I	77-3023KP [1]	8.2 @ 5067
		57-3023-1 [1]	14.3 @ 5018
Yukon XL 1500	5.3L V8 F/I	77-3023KP [1]	8.2 @ 5067
		57-3023-1 [1]	14.3 @ 5018
Yukon XL 2500	6.0L V8 F/I	77-3023KP [1]	8.2 @ 5067
		57-3023-1 [1]	14.3 @ 5018
Yukon XL 2500	8.1L V8 F/I	57-3032 [1]	13.0 @ 4231
2000 GMC			
C2500	5.7L V8 F/I	57-3013-2 [1]	9.5 @ 4918
C2500	7.4L V8 F/I	57-3016-1 [1]	21.5 @ 4078
C3500	7.4L V8 F/I	57-3016-1 [1]	21.5 @ 4078
Jimmy	4.3L V6 F/I	57-3017-2 [1]	7.4 @ 4671
K2500	5.7L V8 F/I	57-3013-2 [1]	9.5 @ 4918
K2500	7.4L V8 F/I	57-3016-1 [1]	21.5 @ 4078
K3500	7.4L V8 F/I	57-3016-1 [1]	21.5 @ 4078
Sierra 1500	4.3L V6 F/I	57-3038 [1]	8.2 @ 4544
Sierra 1500	4.8L V8 F/I	77-3021KP [1]	8.2 @ 5067
		57-3021-1 [1]	9.1 @ 5352

1) Street legal in all US states. 2) Street legal in most states, but not legal for use in California or other states with similar emission control regulations.
* Estimated horsepower gains are based on specific or similar vehicle dyno tests. Results will vary. See Page 479 for more information.
Partial Listing - Complete List of Vehicles and Applications at knfilters.com. See page 5 for information on intake tube materials/colors.

AIR INTAKE SYSTEMS

Vehicle	Engine Type	Intake Kit	Estimated Horsepower*
2000 GMC			
Sierra 1500	5.3L V8 F/I	77-3021KP [1]	8.2 @ 5067
		57-3021-1 [1]	9.1 @ 5352
Sierra 2500	6.0L V8 F/I	77-3023KP [1]	8.2 @ 5067
		57-3023-1 [1]	14.3 @ 5018
Sonoma	2.2L L4 F/I	57-3025-1 [1]	6.7 @ 4700
Sonoma	4.3L V6 F/I	57-3017-2 [1]	7.4 @ 4671
Yukon	4.8L V8 F/I	57-3023-1 [1]	14.3 @ 5018
Yukon	5.3L V8 F/I	77-3023KP [1]	8.2 @ 5067
		57-3023-1 [1]	14.3 @ 5018
Yukon Denali	5.7L V8 F/I	57-3013-2 [1]	9.5 @ 4918
Yukon XL 1500	5.3L V8 F/I	77-3023KP [1]	8.2 @ 5067
		57-3023-1 [1]	14.3 @ 5018
Yukon XL 2500	6.0L V8 F/I	77-3023KP [1]	8.2 @ 5067
		57-3023-1 [1]	14.3 @ 5018
1999 GMC			
C1500	5.0L V8 F/I	57-3013-2 [1]	9.5 @ 4918
C1500	5.7L V8 F/I	57-3013-2 [1]	9.5 @ 4918
C1500 Suburban	5.7L V8 F/I	57-3013-2 [1]	9.5 @ 4918
C2500 Suburban	7.4L V8 F/I	57-3016-1 [1]	21.5 @ 4078
C3500	7.4L V8 F/I	57-3016-1 [1]	21.5 @ 4078
Jimmy	4.3L V6 F/I	57-3017-2 [1]	7.4 @ 4671
K1500	5.7L V8 F/I	57-3013-2 [1]	9.5 @ 4918
K1500 Suburban	5.7L V8 F/I	57-3013-2 [1]	9.5 @ 4918
K2500	5.7L V8 F/I	57-3013-2 [1]	9.5 @ 4918
K2500	7.4L V8 F/I	57-3016-1 [1]	21.5 @ 4078
K2500 Suburban	5.7L V8 F/I	57-3013-2 [1]	9.5 @ 4918
K2500 Suburban	7.4L V8 F/I	57-3016-1 [1]	21.5 @ 4078
K3500	7.4L V8 F/I	57-3016-1 [1]	21.5 @ 4078
Sierra 1500	4.3L V6 F/I	57-3038 [1]	8.2 @ 4544
Sierra 1500	4.8L V8 F/I	77-3021KP [1]	8.2 @ 5067
		57-3021-1 [1]	9.1 @ 5352
Sierra 1500	5.3L V8 F/I	77-3021KP [1]	8.2 @ 5067
		57-3021-1 [1]	9.1 @ 5352
Sierra 2500	6.0L V8 F/I	77-3023KP [1]	8.2 @ 5067
		57-3023-1 [1]	14.3 @ 5018
Sonoma	2.2L L4 F/I	57-3025-1 [1]	6.7 @ 4700
Sonoma	4.3L V6 F/I	57-3017-2 [1]	7.4 @ 4671
Yukon	5.7L V8 F/I	57-3013-2 [1]	9.5 @ 4918
Yukon Denali	5.7L V8 F/I	57-3013-2 [1]	9.5 @ 4918
1998 GMC			
C1500	4.3L V6 F/I	57-3039 [1]	6.0 @ 4476
C1500	5.0L V8 F/I	57-3013-2 [1]	9.5 @ 4918
C1500	5.7L V8 F/I	57-3013-2 [1]	9.5 @ 4918
C1500 Suburban	5.7L V8 F/I	57-3013-2 [1]	9.5 @ 4918
C2500	5.7L V8 F/I	57-3013-2 [1]	9.5 @ 4918
C2500 Suburban	5.7L V8 F/I	57-3013-2 [1]	9.5 @ 4918
C2500 Suburban	7.4L V8 F/I	57-3016-1 [1]	21.5 @ 4078
C3500	7.4L V8 F/I	57-3016-1 [1]	21.5 @ 4078
Jimmy	4.3L V6 F/I	57-3017-2 [1]	7.4 @ 4671
K1500	5.0L V8 F/I	57-3013-2 [1]	9.5 @ 4918
K1500	5.7L V8 F/I	57-3013-2 [1]	9.5 @ 4918
K1500 Suburban	5.7L V8 F/I	57-3013-2 [1]	9.5 @ 4918
K2500	5.7L V8 F/I	57-3013-2 [1]	9.5 @ 4918
K2500	7.4L V8 F/I	57-3016-1 [1]	21.5 @ 4078
K2500 Suburban	5.7L V8 F/I	57-3013-2 [1]	9.5 @ 4918
K2500 Suburban	7.4L V8 F/I	57-3016-1 [1]	21.5 @ 4078
K3500	7.4L V8 F/I	57-3016-1 [1]	21.5 @ 4078
Sonoma	2.2L L4 F/I	57-3025-1 [1]	6.7 @ 4700
Sonoma	4.3L V6 F/I	57-3017-2 [1]	7.4 @ 4671
Yukon	5.7L V8 F/I	57-3013-2 [1]	9.5 @ 4918
1997 GMC			
C1500	4.3L V6 F/I	57-3039 [1]	6.0 @ 4476
C1500	5.0L V8 F/I	57-3013-2 [1]	9.5 @ 4918
C1500	5.7L V8 F/I	57-3013-2 [1]	9.5 @ 4918
C1500 Suburban	5.7L V8 F/I	57-3013-2 [1]	9.5 @ 4918
C2500	5.7L V8 F/I	57-3013-2 [1]	9.5 @ 4918
C2500	7.4L V8 F/I	57-3016-1 [1]	21.5 @ 4078
C2500 Suburban	5.7L V8 F/I	57-3013-2 [1]	9.5 @ 4918
C2500 Suburban	7.4L V8 F/I	57-3016-1 [1]	21.5 @ 4078
C3500	7.4L V8 F/I	57-3016-1 [1]	21.5 @ 4078
Jimmy	4.3L V6 F/I	57-3017-2 [1]	7.4 @ 4671
K1500	5.0L V8 F/I	57-3013-2 [1]	9.5 @ 4918
K1500	5.7L V8 F/I	57-3013-2 [1]	9.5 @ 4918
K1500 Suburban	5.7L V8 F/I	57-3013-2 [1]	9.5 @ 4918
K2500	5.7L V8 F/I	57-3013-2 [1]	9.5 @ 4918
K2500	7.4L V8 F/I	57-3016-1 [1]	21.5 @ 4078
K2500 Suburban	5.7L V8 F/I	57-3013-2 [1]	9.5 @ 4918
K2500 Suburban	7.4L V8 F/I	57-3016-1 [1]	21.5 @ 4078
K3500	7.4L V8 F/I	57-3016-1 [1]	21.5 @ 4078
Sonoma	2.2L L4 F/I	57-3024 [1]	7.5 @ 5224
Sonoma	4.3L V6 F/I	57-3017-2 [1]	7.4 @ 4671
Yukon	5.7L V8 F/I	57-3013-2 [1]	9.5 @ 4918
1996 GMC			
C1500	4.3L V6 F/I	57-3039 [1]	6.0 @ 4476
C1500	5.0L V8 F/I	57-3013-2 [1]	9.5 @ 4918
C1500	5.7L V8 F/I	57-3013-2 [1]	9.5 @ 4918
C1500 Suburban	5.7L V8 F/I	57-3013-2 [1]	9.5 @ 4918
C2500	7.4L V8 F/I	57-3016-1 [1]	21.5 @ 4078
C2500 Suburban	5.7L V8 F/I	57-3013-2 [1]	9.5 @ 4918
C2500 Suburban	7.4L V8 F/I	57-3016-1 [1]	21.5 @ 4078
Jimmy	4.3L V6 F/I	57-3017-2 [1]	7.4 @ 4671
K1500	4.3L V6 F/I	57-3039 [1]	6.0 @ 4476
K1500	5.0L V8 F/I	57-3013-2 [1]	9.5 @ 4918
K1500	5.7L V8 F/I	57-3013-2 [1]	9.5 @ 4918
K1500 Suburban	5.7L V8 F/I	57-3013-2 [1]	9.5 @ 4918
K2500	5.7L V8 F/I	57-3013-2 [1]	9.5 @ 4918
K2500 Suburban	5.7L V8 F/I	57-3013-2 [1]	9.5 @ 4918
K2500 Suburban	7.4L V8 F/I	57-3016-1 [1]	21.5 @ 4078
K3500	7.4L V8 F/I	57-3016-1 [1]	21.5 @ 4078
Sonoma	2.2L L4 F/I	57-3024 [1]	7.5 @ 5224
Sonoma	4.3L V6 F/I	57-3017-2 [1]	7.4 @ 4671
Yukon	5.7L V8 F/I	57-3013-2 [1]	9.5 @ 4918
1995 GMC			
C1500	5.0L V8 F/I	63-1007-1 [2]	6.7 @ 4107
		57-3026 [1]	6.7 @ 4107
C1500	5.7L V8 F/I	63-1007-1 [2]	6.7 @ 4107
		57-3026 [1]	6.7 @ 4107
C1500 Suburban	5.7L V8 F/I	63-1007-1 [2]	6.7 @ 4107
		57-3026 [1]	6.7 @ 4107
C2500	5.7L V8 F/I	57-3026 [1]	6.7 @ 4107
C2500 Suburban	5.7L V8 F/I	63-1007-1 [2]	6.7 @ 4107
		57-3026 [1]	6.7 @ 4107
Jimmy	4.3L V6 CPI	57-3009 [1]	7.1 @ 4571
K1500	5.0L V8 F/I	63-1007-1 [2]	6.7 @ 4107
		57-3026 [1]	6.7 @ 4107
K1500	5.7L V8 F/I	63-1007-1 [2]	6.7 @ 4107

1) Street legal in all US states. 2) Street legal in most states, but not legal for use in California or other states with similar emission control regulations.
* Estimated horsepower gains are based on specific or similar vehicle dyno tests. Results will vary. See Page 479 for more information.
Partial Listing - Complete List of Vehicles and Applications at knfilters.com. See page 5 for information on intake tube materials/colors.

Vehicle	Engine Type	Intake Kit	Estimated Horsepower*
1995 GMC			
K1500	5.7L V8 F/I	57-3026 [1]	6.7 @ 4107
K1500 Suburban	5.7L V8 F/I	63-1007-1 [2]	6.7 @ 4107
		57-3026 [1]	6.7 @ 4107
K2500	5.7L V8 F/I	63-1007-1 [2]	6.7 @ 4107
		57-3026 [1]	6.7 @ 4107
K2500 Suburban	5.7L V8 F/I	63-1007-1 [2]	6.7 @ 4107
		57-3026 [1]	6.7 @ 4107
K2500 Suburban	7.4L V8 F/I	63-1007-1 [2]	6.7 @ 4107
		57-3027 [1]	7.4 @ 3571
K2500 Suburban	7.4L V8 F/I - w/o heat stove	57-3014 [1]	17.6 @ 3811
Sonoma	2.2L L4 F/I	57-3024 [1]	7.5 @ 5224
Sonoma	4.3L V6 CPI	57-3009 [1]	7.1 @ 4571
Sonoma	4.3L V6 TBI	57-3029 [1]	4.7 @ 3971
Yukon	5.7L V8 F/I	63-1007-1 [2]	6.7 @ 4107
		57-3026 [1]	6.7 @ 4107
1994 GMC			
C1500	5.0L V8 F/I	63-1007-1 [2]	6.7 @ 4107
		57-3026 [1]	6.7 @ 4107
C1500	5.7L V8 F/I	63-1007-1 [2]	6.7 @ 4107
		57-3026 [1]	6.7 @ 4107
C1500 Suburban	5.7L V8 F/I	63-1007-1 [2]	6.7 @ 4107
		57-3026 [1]	6.7 @ 4107
C2500 Suburban	5.7L V8 F/I	57-3026 [1]	6.7 @ 4107
Jimmy	4.3L V6 TBI	57-3029 [1]	4.7 @ 3971
K1500	5.7L V8 F/I	63-1007-1 [2]	6.7 @ 4107
		57-3026 [1]	6.7 @ 4107
K1500 Suburban	5.7L V8 F/I	63-1007-1 [2]	6.7 @ 4107
		57-3026 [1]	6.7 @ 4107
K2500	5.7L V8 F/I	63-1007-1 [2]	6.7 @ 4107
		57-3026 [1]	6.7 @ 4107
K2500 Suburban	5.7L V8 F/I	63-1007-1 [2]	6.7 @ 4107
		57-3026 [1]	6.7 @ 4107
K2500 Suburban	7.4L V8 F/I	63-1007-1 [2]	6.7 @ 4107
		57-3027 [1]	7.4 @ 3571
K2500 Suburban	7.4L V8 F/I - w/o heat stove	57-3014 [1]	17.6 @ 3811
Sonoma	2.2L L4 F/I	57-3024 [1]	7.5 @ 5224
Sonoma	4.3L V6 CPI	57-3009 [1]	7.1 @ 4571
Sonoma	4.3L V6 TBI	57-3029 [1]	4.7 @ 3971
Yukon	5.7L V8 F/I	63-1007-1 [2]	6.7 @ 4107
		57-3026 [1]	6.7 @ 4107
1993 GMC			
C1500	5.0L V8 F/I	63-1007-1 [2]	6.7 @ 4107
		57-3026 [1]	6.7 @ 4107
C1500	5.7L V8 F/I	63-1007-1 [2]	6.7 @ 4107
		57-3026 [1]	6.7 @ 4107
C1500 Suburban	5.7L V8 F/I	63-1007-1 [2]	6.7 @ 4107
		57-3026 [1]	6.7 @ 4107
C2500	5.7L V8 F/I	57-3026 [1]	6.7 @ 4107
C2500 Suburban	5.7L V8 F/I	57-3026 [1]	6.7 @ 4107
Jimmy	4.3L V6 TBI	57-3028 [1]	5.6 @ 3963
K1500	5.7L V8 F/I	63-1007-1 [2]	6.7 @ 4107
		57-3026 [1]	6.7 @ 4107
K1500 Suburban	5.7L V8 F/I	63-1007-1 [2]	6.7 @ 4107
		57-3026 [1]	6.7 @ 4107
Sonoma	4.3L V6 TBI	57-3028 [1]	5.6 @ 3963
Yukon	5.7L V8 F/I	63-1007-1 [2]	6.7 @ 4107
		57-3026 [1]	6.7 @ 4107
1992 GMC			
C1500	5.0L V8 F/I	63-1007-1 [2]	6.7 @ 4107
		57-3026 [1]	6.7 @ 4107
C1500	5.7L V8 F/I	63-1007-1 [2]	6.7 @ 4107
		57-3026 [1]	6.7 @ 4107
C1500 Suburban	5.7L V8 F/I	63-1007-1 [2]	6.7 @ 4107
		57-3026 [1]	6.7 @ 4107
Jimmy	4.3L V6 TBI	57-3028 [1]	5.6 @ 3963
K1500	5.7L V8 F/I	63-1007-1 [2]	6.7 @ 4107
		57-3026 [1]	6.7 @ 4107
K1500 Suburban	5.7L V8 F/I	63-1007-1 [2]	6.7 @ 4107
		57-3026 [1]	6.7 @ 4107
Sonoma	4.3L V6 TBI	57-3028 [1]	5.6 @ 3963
1991 GMC			
C1500	5.0L V8 F/I	57-3026 [1]	6.7 @ 4107
C1500	5.7L V8 F/I	63-1007-1 [2]	6.7 @ 4107
		57-3026 [1]	6.7 @ 4107
K1500	5.7L V8 F/I	63-1007-1 [2]	6.7 @ 4107
		57-3026 [1]	6.7 @ 4107
K2500	5.7L V8 F/I	57-3026 [1]	6.7 @ 4107
Sonoma	4.3L V6 TBI	57-3028 [1]	5.6 @ 3963
1990 GMC			
C1500	5.0L V8 F/I	57-3026 [1]	6.7 @ 4107
C1500	5.7L V8 F/I	63-1007-1 [2]	6.7 @ 4107
		57-3026 [1]	6.7 @ 4107
Jimmy	5.7L V8 F/I	63-1007-1 [2]	6.7 @ 4107
K1500	5.7L V8 F/I	63-1007-1 [2]	6.7 @ 4107
		57-3026 [1]	6.7 @ 4107
1989 GMC			
C1500	5.7L V8 F/I	63-1007-1 [2]	6.7 @ 4107
		57-3026 [1]	6.7 @ 4107
K1500	5.7L V8 F/I	63-1007-1 [2]	6.7 @ 4107
		57-3026 [1]	6.7 @ 4107
1988 GMC			
C1500	5.0L V8 F/I	63-1007-1 [2]	6.7 @ 4107
		57-3026 [1]	6.7 @ 4107
C1500	5.7L V8 F/I	63-1007-1 [2]	6.7 @ 4107
		57-3026 [1]	6.7 @ 4107
K1500	5.7L V8 F/I	63-1007-1 [2]	6.7 @ 4107
		57-3026 [1]	6.7 @ 4107
2013 HARLEY DAVIDSON			
FLHX Street Glide	103 CI - Exc. lower fairings	63-1122P [2]	12.9 @ 4612
		63-1122 [2]	12.9 @ 4612
FLSTC Heritage Softail Classic	103 CI - Exc. lower fairings	63-1125P [2]	7.8 @ 4953
		63-1125 [2]	7.8 @ 4953
XL883N Iron	54 CI	63-1126P [2]	8.6 @ 5533
		63-1126 [2]	8.6 @ 5533
2012 HARLEY DAVIDSON			
FLHR Road King	103 CI - Exc. lower fairings	63-1122P [2]	12.9 @ 4612
		63-1122 [2]	12.9 @ 4612
FLHRC Road King Classic	103 CI - Exc. lower fairings	63-1122P [2]	12.9 @ 4612
		63-1122 [2]	12.9 @ 4612

1) Street legal in all US states. 2) Street legal in most states, but not legal for use in California or other states with similar emission control regulations.
* Estimated horsepower gains are based on specific or similar vehicle dyno tests. Results will vary. See Page 479 for more information.
Partial Listing - Complete List of Vehicles and Applications at knfilters.com. See page 5 for information on intake tube materials/colors.

HARLEY DAVIDSON AIR INTAKE SYSTEMS

Vehicle	Engine Type	Intake Kit	Estimated Horsepower*
2012 HARLEY DAVIDSON			
FLHTC Electra Glide Classic	103 CI - Exc. lower fairings	63-1122P [2]	12.9 @ 4612
		63-1122 [2]	12.9 @ 4612
FLHX Street Glide	103 CI - Exc. lower fairings	63-1122P [2]	12.9 @ 4612
		63-1122 [2]	12.9 @ 4612
FLSTC Heritage Softail Classic	103 CI - Exc. lower fairings	63-1125P [2]	7.8 @ 4953
		63-1125 [2]	7.8 @ 4953
FLSTF Fat Boy	103 CI - Exc. lower fairings	63-1125P [2]	7.8 @ 4953
		63-1125 [2]	7.8 @ 4953
FLSTFB Softail Fat Boy Lo	103 CI - Exc. lower fairings	63-1125P [2]	7.8 @ 4953
		63-1125 [2]	7.8 @ 4953
FLSTN Softail Deluxe	103 CI - Exc. lower fairings	63-1125P [2]	7.8 @ 4953
		63-1125 [2]	7.8 @ 4953
FLTRX Road Glide Custom	103 CI - Exc. lower fairings	63-1122P [2]	12.9 @ 4612
		63-1122 [2]	12.9 @ 4612
FXDB Dyna Street Bob	96 CI - Exc. lower fairings	63-1125P [2]	7.8 @ 4953
		63-1125 [2]	7.8 @ 4953
FXDC Dyna Super Glide Custom	96 CI - Exc. lower fairings	63-1125P [2]	7.8 @ 4953
		63-1125 [2]	7.8 @ 4953
FXDF Fat Bob	103 CI - Exc. lower fairings	63-1125P [2]	7.8 @ 4953
		63-1125 [2]	7.8 @ 4953
FXDWG Dyna Wide Glide	103 CI - Exc. lower fairings	63-1125P [2]	7.8 @ 4953
		63-1125 [2]	7.8 @ 4953
FXS Blackline	103 CI - Exc. lower fairings	63-1125P [2]	7.8 @ 4953
		63-1125 [2]	7.8 @ 4953
XL883L SuperLow	54 CI	63-1126P [2]	8.6 @ 5533
		63-1126 [2]	8.6 @ 5533
XL883N Iron	54 CI	63-1126P [2]	8.6 @ 5533
		63-1126 [2]	8.6 @ 5533
XL1200C Sportster Custom	74 CI	63-1126P [2]	8.6 @ 5533
		63-1126 [2]	8.6 @ 5533
XL1200N Sportster Nightster	74 CI	63-1126P [2]	8.6 @ 5533
		63-1126 [2]	8.6 @ 5533
XL1200V Seventy-Two	74 CI	63-1126P [2]	8.6 @ 5533
		63-1126 [2]	8.6 @ 5533
XL1200X Forty-Eight	74 CI	63-1126P [2]	8.6 @ 5533
		63-1126 [2]	8.6 @ 5533
2011 HARLEY DAVIDSON			
FLHP Road King Police	103 CI - Exc. lower fairings	63-1122P [2]	12.9 @ 4612
		63-1122 [2]	12.9 @ 4612
FLHR Road King	96 CI - Exc. lower fairings	63-1122P [2]	12.9 @ 4612
		63-1122 [2]	12.9 @ 4612
FLHRC Road King Classic	103 CI - Exc. lower fairings	63-1122P [2]	12.9 @ 4612
		63-1122 [2]	12.9 @ 4612
FLHTC Electra Glide Classic	96 CI - Exc. lower fairings	63-1122P [2]	12.9 @ 4612
		63-1122 [2]	12.9 @ 4612
FLHTP Electra Glide Police	103 CI - Exc. lower fairings	63-1122P [2]	12.9 @ 4612
		63-1122 [2]	12.9 @ 4612
FLHX Street Glide	96 CI - Exc. lower fairings	63-1122P [2]	12.9 @ 4612
		63-1122 [2]	12.9 @ 4612
FLSTC Heritage Softail Classic	96 CI - Exc. lower fairings	63-1125P [2]	7.8 @ 4953
		63-1125 [2]	7.8 @ 4953
FLSTF Fat Boy	96 CI - Exc. lower fairings	63-1125P [2]	7.8 @ 4953
		63-1125 [2]	7.8 @ 4953
FLSTFB Softail Fat Boy Lo	96 CI - Exc. lower fairings	63-1125P [2]	7.8 @ 4953
		63-1125 [2]	7.8 @ 4953
FLSTN Softail Deluxe	96 CI - Exc. lower fairings	63-1125P [2]	7.8 @ 4953
		63-1125 [2]	7.8 @ 4953
FLSTSB Softail Cross Bones	96 CI - Exc. lower fairings	63-1125P [2]	7.8 @ 4953
		63-1125 [2]	7.8 @ 4953
FLTRX Road Glide Custom	96 CI - Exc. lower fairings	63-1122P [2]	12.9 @ 4612
		63-1122 [2]	12.9 @ 4612
FXCWC Rocker C	96 CI - Exc. lower fairings	63-1125P [2]	7.8 @ 4953
		63-1125 [2]	7.8 @ 4953
FXDB Dyna Street Bob	96 CI - Exc. lower fairings	63-1125P [2]	7.8 @ 4953
		63-1125 [2]	7.8 @ 4953
FXDC Dyna Super Glide Custom	96 CI - Exc. lower fairings	63-1125P [2]	7.8 @ 4953
		63-1125 [2]	7.8 @ 4953
FXDF Fat Bob	96 CI - Exc. lower fairings	63-1125P [2]	7.8 @ 4953
		63-1125 [2]	7.8 @ 4953
FXDWG Dyna Wide Glide	96 CI - Exc. lower fairings	63-1125P [2]	7.8 @ 4953
		63-1125 [2]	7.8 @ 4953

1) Street legal in all US states. 2) Street legal in most states, but not legal for use in California or other states with similar emission control regulations.
* Estimated horsepower gains are based on specific or similar vehicle dyno tests. Results will vary. See Page 479 for more information.
Partial Listing - Complete List of Vehicles and Applications at knfilters.com. See page 5 for information on intake tube materials/colors.

2011 HARLEY DAVIDSON

Vehicle	Engine Type	Intake Kit	Estimated Horsepower*
FXS Blackline	103 CI - Exc. lower fairings	63-1125P [2]	7.8 @ 4953
		63-1125 [2]	7.8 @ 4953
XL883L SuperLow	54 CI	63-1126P [2]	8.6 @ 5533
		63-1126 [2]	8.6 @ 5533
XL883N Iron	54 CI	63-1126 [2]	8.6 @ 5533
XL1200C Sportster Custom	74 CI	63-1126P [2]	8.6 @ 5533
		63-1126 [2]	8.6 @ 5533
XL1200L Sportster Low	74 CI	63-1126 [2]	8.6 @ 5533
XL1200N Sportster Nightster	74 CI	63-1126P [2]	8.6 @ 5533
		63-1126 [2]	8.6 @ 5533
XL1200X Forty-Eight	74 CI	63-1126P [2]	8.6 @ 5533
		63-1126 [2]	8.6 @ 5533

2010 HARLEY DAVIDSON

Vehicle	Engine Type	Intake Kit	Estimated Horsepower*
FLHP Road King Police	103 CI - Exc. lower fairings	63-1122P [2]	12.9 @ 4612
		63-1122 [2]	12.9 @ 4612
FLHR Road King	96 CI - Exc. lower fairings	63-1122P [2]	12.9 @ 4612
		63-1122 [2]	12.9 @ 4612
FLHRC Road King Classic	96 CI - Exc. lower fairings	63-1122P [2]	12.9 @ 4612
		63-1122 [2]	12.9 @ 4612
FLHT Electra Glide Standard	96 CI - Exc. lower fairings	63-1122P [2]	12.9 @ 4612
		63-1122 [2]	12.9 @ 4612
FLHTC Electra Glide Classic	96 CI - Exc. lower fairings	63-1122P [2]	12.9 @ 4612
		63-1122 [2]	12.9 @ 4612
FLHTP Electra Glide Police	103 CI - Exc. lower fairings	63-1122P [2]	12.9 @ 4612
		63-1122 [2]	12.9 @ 4612
FLHX Street Glide	96 CI - Exc. lower fairings	63-1122P [2]	12.9 @ 4612
		63-1122 [2]	12.9 @ 4612
FLSTC Heritage Softail Classic	96 CI - Exc. lower fairings	63-1125P [2]	7.8 @ 4953
		63-1125 [2]	7.8 @ 4953
FLSTF Fat Boy	96 CI - Exc. lower fairings	63-1125P [2]	7.8 @ 4953
		63-1125 [2]	7.8 @ 4953
FLSTFB Softail Fat Boy Lo	96 CI - Exc. lower fairings	63-1125P [2]	7.8 @ 4953
		63-1125 [2]	7.8 @ 4953
FLSTN Softail Deluxe	96 CI - Exc. lower fairings	63-1125P [2]	7.8 @ 4953
		63-1125 [2]	7.8 @ 4953
FLSTSB Softail Cross Bones	96 CI - Exc. lower fairings	63-1125P [2]	7.8 @ 4953

2010 HARLEY DAVIDSON

Vehicle	Engine Type	Intake Kit	Estimated Horsepower*
FLSTSB Softail Cross Bones	96 CI - Exc. lower fairings	63-1125 [2]	7.8 @ 4953
FLTR Road Glide	96 CI - Exc. lower fairings	63-1122P [2]	12.9 @ 4612
		63-1122 [2]	12.9 @ 4612
FLTRX Road Glide Custom	96 CI - Exc. lower fairings	63-1122P [2]	12.9 @ 4612
		63-1122 [2]	12.9 @ 4612
FXD Dyna Super Glide	96 CI - Exc. lower fairings	63-1125P [2]	7.8 @ 4953
		63-1125 [2]	7.8 @ 4953
FXDB Dyna Street Bob	96 CI - Exc. lower fairings	63-1125P [2]	7.8 @ 4953
		63-1125 [2]	7.8 @ 4953
FXDC Dyna Super Glide Custom	96 CI - Exc. lower fairings	63-1125P [2]	7.8 @ 4953
		63-1125 [2]	7.8 @ 4953
FXDF Fat Bob	96 CI - Exc. lower fairings	63-1125P [2]	7.8 @ 4953
		63-1125 [2]	7.8 @ 4953
FXDWG Dyna Wide Glide	96 CI - Exc. lower fairings	63-1125P [2]	7.8 @ 4953
		63-1125 [2]	7.8 @ 4953
FXSTC Softail Custom	96 CI - Exc. lower fairings	63-1125P [2]	7.8 @ 4953
		63-1125 [2]	7.8 @ 4953
XL883L Sportster Low	54 CI	63-1126P [2]	8.6 @ 5533
		63-1126 [2]	8.6 @ 5533
XL883N Iron	54 CI	63-1126P [2]	8.6 @ 5533
		63-1126 [2]	8.6 @ 5533
XL1200C Sportster Custom	74 CI	63-1126P [2]	8.6 @ 5533
		63-1126 [2]	8.6 @ 5533
XL1200L Sportster Low	74 CI	63-1126 [2]	8.6 @ 5533
XL1200N Sportster Nightster	74 CI	63-1126P [2]	8.6 @ 5533
		63-1126 [2]	8.6 @ 5533
XL1200X Forty-Eight	74 CI	63-1126P [2]	8.6 @ 5533
		63-1126 [2]	8.6 @ 5533

2009 HARLEY DAVIDSON

Vehicle	Engine Type	Intake Kit	Estimated Horsepower*
FLHP Road King Police	103 CI - Exc. lower fairings	63-1122P [2]	12.9 @ 4612
		63-1122 [2]	12.9 @ 4612
FLHR Road King	96 CI - Exc. lower fairings	63-1122P [2]	12.9 @ 4612
		63-1122 [2]	12.9 @ 4612
FLHRC Road King Classic	96 CI - Exc. lower fairings	63-1122P [2]	12.9 @ 4612
		63-1122 [2]	12.9 @ 4612
FLHT Electra Glide Standard	96 CI - Exc. lower fairings	63-1122P [2]	12.9 @ 4612

1) Street legal in all US states. 2) Street legal in most states, but not legal for use in California or other states with similar emission control regulations.
* Estimated horsepower gains are based on specific or similar vehicle dyno tests. Results will vary. See Page 479 for more information.
Partial Listing - Complete List of Vehicles and Applications at knfilters.com. See page 5 for information on intake tube materials/colors.

HARLEY DAVIDSON AIR INTAKE SYSTEMS

Vehicle	Engine Type	Intake Kit	Estimated Horsepower*
2009 HARLEY DAVIDSON			
FLHT Electra Glide Standard	96 CI - Exc. lower fairings	63-1122 [2]	12.9 @ 4612
FLHTC Electra Glide Classic	96 CI - Exc. lower fairings	63-1122P [2]	12.9 @ 4612
		63-1122 [2]	12.9 @ 4612
FLHTP Electra Glide Police	103 CI - Exc. lower fairings	63-1122P [2]	12.9 @ 4612
		63-1122 [2]	12.9 @ 4612
FLHX Street Glide	96 CI - Exc. lower fairings	63-1122P [2]	12.9 @ 4612
		63-1122 [2]	12.9 @ 4612
FLSTC Heritage Softail Classic	96 CI - Exc. lower fairings	63-1125P [2]	10.2 @ 4953
		63-1125 [2]	10.2 @ 4953
FLSTF Fat Boy	96 CI - Exc. lower fairings	63-1125P [2]	7.8 @ 4953
		63-1125 [2]	7.8 @ 4953
FLSTN Softail Deluxe	96 CI - Exc. lower fairings	63-1125P [2]	10.2 @ 4953
		63-1125 [2]	10.2 @ 4953
FLSTSB Softail Cross Bones	96 CI - Exc. lower fairings	63-1125P [2]	10.2 @ 4953
		63-1125 [2]	10.2 @ 4953
FLTR Road Glide	96 CI - Exc. lower fairings	63-1122P [2]	12.9 @ 4612
		63-1122 [2]	12.9 @ 4612
FXCWC Rocker C	96 CI - Exc. lower fairings	63-1125P [2]	7.8 @ 4953
		63-1125 [2]	7.8 @ 4953
FXD Dyna Super Glide	96 CI - Exc. lower fairings	63-1125P [2]	7.8 @ 4953
		63-1125 [2]	7.8 @ 4953
FXDB Dyna Street Bob	96 CI - Exc. lower fairings	63-1125P [2]	7.8 @ 4953
		63-1125 [2]	7.8 @ 4953
FXDC Dyna Super Glide Custom	96 CI - Exc. lower fairings	63-1125P [2]	7.8 @ 4953
		63-1125 [2]	7.8 @ 4953
FXDF Fat Bob	96 CI - Exc. lower fairings	63-1125P [2]	7.8 @ 4953
		63-1125 [2]	7.8 @ 4953
FXDL Dyna Low Rider	96 CI - Exc. lower fairings	63-1125P [2]	7.8 @ 4953
		63-1125 [2]	7.8 @ 4953
FXSTB Night Train	96 CI - Exc. lower fairings	63-1125P [2]	7.8 @ 4953
		63-1125 [2]	7.8 @ 4953
FXSTC Softail Custom	96 CI - Exc. lower fairings	63-1125P [2]	10.2 @ 4953
		63-1125 [2]	10.2 @ 4953
XL883C Sportster Custom	54 CI	63-1126P [2]	8.6 @ 5533
		63-1126 [2]	8.6 @ 5533
2009 HARLEY DAVIDSON			
XL883L Sportster Low	54 CI	63-1126P [2]	8.6 @ 5533
		63-1126 [2]	8.6 @ 5533
XL883N Iron	54 CI	63-1126P [2]	8.6 @ 5533
		63-1126 [2]	8.6 @ 5533
XL1200C Sportster Custom	74 CI	63-1126P [2]	8.6 @ 5533
		63-1126 [2]	8.6 @ 5533
XL1200L Sportster Low	74 CI	63-1126P [2]	8.6 @ 5533
		63-1126 [2]	8.6 @ 5533
XL1200N Sportster Nightster	74 CI	63-1126P [2]	8.6 @ 5533
		63-1126 [2]	8.6 @ 5533
2008 HARLEY DAVIDSON			
FLHR Road King	96 CI - Exc. lower fairings	63-1122P [2]	12.9 @ 4612
		63-1122 [2]	12.9 @ 4612
FLHRC Road King Classic	96 CI - Exc. lower fairings	63-1122P [2]	12.9 @ 4612
		63-1122 [2]	12.9 @ 4612
FLHRSE4 Screamin Eagle Road King	110 CI - Exc. lower fairings	63-1122P [2]	12.9 @ 4612
		63-1122 [2]	12.9 @ 4612
FLHT Electra Glide Standard	96 CI - Exc. lower fairings	63-1122P [2]	12.9 @ 4612
		63-1122 [2]	12.9 @ 4612
FLHTC Electra Glide Classic	96 CI - Exc. lower fairings	63-1122P [2]	12.9 @ 4612
		63-1122 [2]	12.9 @ 4612
FLHX Street Glide	96 CI - Exc. lower fairings	63-1122P [2]	12.9 @ 4612
		63-1122 [2]	12.9 @ 4612
FLSTC Heritage Softail Classic	96 CI - Exc. lower fairings	63-1125P [2]	7.8 @ 4953
		63-1125 [2]	7.8 @ 4953
FLSTF Fat Boy	96 CI - Exc. lower fairings	63-1125P [2]	7.8 @ 4953
		63-1125 [2]	7.8 @ 4953
FLSTN Softail Deluxe	96 CI - Exc. lower fairings	63-1125P [2]	7.8 @ 4953
		63-1125 [2]	7.8 @ 4953
FLSTSB Softail Cross Bones	96 CI - Exc. lower fairings	63-1125P [2]	7.8 @ 4953
		63-1125 [2]	7.8 @ 4953
FLTR Road Glide	96 CI - Exc. lower fairings	63-1122P [2]	12.9 @ 4612
		63-1122 [2]	12.9 @ 4612
FXCWC Rocker C	96 CI - Exc. lower fairings	63-1125P [2]	7.8 @ 4953
		63-1125 [2]	7.8 @ 4953

1) Street legal in all US states. 2) Street legal in most states, but not legal for use in California or other states with similar emission control regulations.
* Estimated horsepower gains are based on specific or similar vehicle dyno tests. Results will vary. See Page 479 for more information.
Partial Listing - Complete List of Vehicles and Applications at knfilters.com. See page 5 for information on intake tube materials/colors.

2008 HARLEY DAVIDSON

Vehicle	Engine Type	Intake Kit	Estimated Horsepower*
FXD Dyna Super Glide	96 CI - Exc. lower fairings	63-1125P [2]	7.8 @ 4953
		63-1125 [2]	7.8 @ 4953
FXDB Dyna Street Bob	96 CI - Exc. lower fairings	63-1125P [2]	7.8 @ 4953
		63-1125 [2]	7.8 @ 4953
FXDC Dyna Super Glide Custom	96 CI - Exc. lower fairings	63-1125P [2]	7.8 @ 4953
		63-1125 [2]	7.8 @ 4953
FXDF Fat Bob	96 CI - Exc. lower fairings	63-1125P [2]	7.8 @ 4953
		63-1125 [2]	7.8 @ 4953
FXDL Dyna Low Rider	96 CI - Exc. lower fairings	63-1125P [2]	7.8 @ 4953
		63-1125 [2]	7.8 @ 4953
FXDWG Dyna Wide Glide	96 CI - Exc. lower fairings	63-1125P [2]	7.8 @ 4953
		63-1125 [2]	7.8 @ 4953
FXSTB Night Train	96 CI - Exc. lower fairings	63-1125P [2]	7.8 @ 4953
		63-1125 [2]	7.8 @ 4953
FXSTC Softail Custom	96 CI - Exc. lower fairings	63-1125P [2]	7.8 @ 4953
		63-1125 [2]	7.8 @ 4953
XL883 Sportster	54 CI	63-1126P [2]	8.6 @ 5533
		63-1126 [2]	8.6 @ 5533
XL883C Sportster Custom	54 CI	63-1126P [2]	8.6 @ 5533
		63-1126 [2]	8.6 @ 5533
XL883L Sportster Low	54 CI	63-1126P [2]	8.6 @ 5533
		63-1126 [2]	8.6 @ 5533
XL1200C Sportster Custom	74 CI	63-1126P [2]	8.6 @ 5533
		63-1126 [2]	8.6 @ 5533
XL1200L Sportster Low	74 CI	63-1126P [2]	8.6 @ 5533
		63-1126 [2]	8.6 @ 5533
XL1200N Sportster Nightster	74 CI	63-1126P [2]	8.6 @ 5533
		63-1126 [2]	8.6 @ 5533
XL1200R Sportster Roadster	74 CI	63-1126P [2]	8.6 @ 5533
		63-1126 [2]	8.6 @ 5533

2007 HARLEY DAVIDSON

Vehicle	Engine Type	Intake Kit	Estimated Horsepower*
FLHR Road King	96 CI - Exc. lower fairings	63-1125P [2]	7.8 @ 4953
		63-1125 [2]	7.8 @ 4953
FLHRC Road King Classic	96 CI - Exc. lower fairings	63-1125P [2]	7.8 @ 4953
		63-1125 [2]	7.8 @ 4953

2007 HARLEY DAVIDSON

Vehicle	Engine Type	Intake Kit	Estimated Horsepower*
FLHRS Road King Custom	96 CI - Exc. lower fairings	63-1125P [2]	7.8 @ 4953
		63-1125 [2]	7.8 @ 4953
FLHT Electra Glide Standard	96 CI - Exc. lower fairings	63-1125P [2]	7.8 @ 4953
		63-1125 [2]	7.8 @ 4953
FLHTC Electra Glide Classic	96 CI - Exc. lower fairings	63-1125P [2]	7.8 @ 4953
		63-1125 [2]	7.8 @ 4953
FLHTCU Ultra Classic Electra Glide	96 CI - Exc. lower fairings	63-1125P [2]	7.8 @ 4953
		63-1125 [2]	7.8 @ 4953
FLHX Street Glide	96 CI - Exc. lower fairings	63-1125P [2]	7.8 @ 4953
		63-1125 [2]	7.8 @ 4953
FLSTC Heritage Softail Classic	96 CI - Exc. lower fairings	63-1125P [2]	7.8 @ 4953
		63-1125 [2]	7.8 @ 4953
FLSTF Fat Boy	96 CI - Exc. lower fairings	63-1125P [2]	7.8 @ 4953
		63-1125 [2]	7.8 @ 4953
FLSTN Softail Deluxe	96 CI - Exc. lower fairings	63-1125P [2]	7.8 @ 4953
		63-1125 [2]	7.8 @ 4953
FLTR Road Glide	96 CI - Exc. lower fairings	63-1125P [2]	7.8 @ 4953
		63-1125 [2]	7.8 @ 4953
FXD Dyna Super Glide	96 CI - Exc. lower fairings	63-1125P [2]	7.8 @ 4953
		63-1125 [2]	7.8 @ 4953
FXDB Dyna Street Bob	96 CI - Exc. lower fairings	63-1125P [2]	7.8 @ 4953
		63-1125 [2]	7.8 @ 4953
FXDC Dyna Super Glide Custom	96 CI - Exc. lower fairings	63-1125P [2]	7.8 @ 4953
		63-1125 [2]	7.8 @ 4953
FXDL Dyna Low Rider	96 CI - Exc. lower fairings	63-1125P [2]	7.8 @ 4953
		63-1125 [2]	7.8 @ 4953
FXDWG Dyna Wide Glide	96 CI - Exc. lower fairings	63-1125P [2]	7.8 @ 4953
		63-1125 [2]	7.8 @ 4953
FXST Softail Standard	96 CI - Exc. lower fairings	63-1125P [2]	7.8 @ 4953
		63-1125 [2]	7.8 @ 4953
FXSTB Night Train	96 CI - Exc. lower fairings	63-1125P [2]	7.8 @ 4953
		63-1125 [2]	7.8 @ 4953
FXSTC Softail Custom	96 CI - Exc. lower fairings	63-1125P [2]	7.8 @ 4953

1) Street legal in all US states. 2) Street legal in most states, but not legal for use in California or other states with similar emission control regulations.
* Estimated horsepower gains are based on specific or similar vehicle dyno tests. Results will vary. See Page 479 for more information.
Partial Listing - Complete List of Vehicles and Applications at knfilters.com. See page 5 for information on intake tube materials/colors.

HARLEY DAVIDSON AIR INTAKE SYSTEMS

Vehicle	Engine Type	Intake Kit	Estimated Horsepower*
2007 HARLEY DAVIDSON			
FXSTC Softail Custom	96 CI - Exc. lower fairings	63-1125 [2]	7.8 @ 4953
FXSTD Softail Deuce	96 CI - Exc. lower fairings	63-1125P [2]	7.8 @ 4953
		63-1125 [2]	7.8 @ 4953
XL50 50th Anniversary Sportster	74 CI	63-1126P [2]	8.6 @ 5533
		63-1126 [2]	8.6 @ 5533
XL883 Sportster	54 CI	63-1126P [2]	8.6 @ 5533
		63-1126 [2]	8.6 @ 5533
XL883R Sportster	54 CI	63-1126 [2]	8.6 @ 5533
XL1200C Sportster Custom	74 CI	63-1126P [2]	8.6 @ 5533
		63-1126 [2]	8.6 @ 5533
XL1200L Sportster Low	74 CI	63-1126P [2]	8.6 @ 5533
		63-1126 [2]	8.6 @ 5533
XL1200N Sportster Nightster	74 CI	63-1126P [2]	8.6 @ 5533
		63-1126 [2]	8.6 @ 5533
XL1200R Sportster Roadster	74 CI	63-1126P [2]	8.6 @ 5533
		63-1126 [2]	8.6 @ 5533
2006 HARLEY DAVIDSON			
FLHRCI Road King Classic F/I	88 CI - Exc. lower fairings	63-1125P [2]	7.8 @ 4953
		63-1125 [2]	7.8 @ 4953
FLHRI Road King F/I	88 CI - Exc. lower fairings	63-1125P [2]	7.8 @ 4953
		63-1125 [2]	7.8 @ 4953
FLHRSI Road King Custom F/I	88 CI - Exc. lower fairings	63-1125P [2]	7.8 @ 4953
		63-1125 [2]	7.8 @ 4953
FLHTCI Electra Glide Classic F/I	88 CI - Exc. lower fairings	63-1125P [2]	7.8 @ 4953
		63-1125 [2]	7.8 @ 4953
FLHTCUI Electra Glide Ultra Classic F/I	88 CI - Exc. lower fairings	63-1125P [2]	7.8 @ 4953
		63-1125 [2]	7.8 @ 4953
FLHTI Electra Glide Standard F/I	88 CI - Exc. lower fairings	63-1125P [2]	7.8 @ 4953
		63-1125 [2]	7.8 @ 4953
FLHXI Street Glide F/I	88 CI - Exc. lower fairings	63-1125P [2]	7.8 @ 4953
		63-1125 [2]	7.8 @ 4953
FLSTCI Heritage Softail Classic F/I	88 CI - Exc. lower fairings	63-1125P [2]	7.8 @ 4953
		63-1125 [2]	7.8 @ 4953
2006 HARLEY DAVIDSON			
FLSTFI Fat Boy F/I	88 CI - Exc. lower fairings	63-1125P [2]	7.8 @ 4953
		63-1125 [2]	7.8 @ 4953
FLSTI Heritage Softail F/I	88 CI - Exc. lower fairings	63-1125P [2]	7.8 @ 4953
		63-1125 [2]	7.8 @ 4953
FLSTNI Softail Deluxe F/I	88 CI - Exc. lower fairings	63-1125P [2]	7.8 @ 4953
		63-1125 [2]	7.8 @ 4953
FLTRI Road Glide F/I	88 CI - Exc. lower fairings	63-1125P [2]	7.8 @ 4953
		63-1125 [2]	7.8 @ 4953
FXDBI Street Bob F/I	88 CI - Exc. lower fairings	63-1125P [2]	7.8 @ 4953
		63-1125 [2]	7.8 @ 4953
FXDCI Dyna Super Glide Custom F/I	88 CI - Exc. lower fairings	63-1125P [2]	7.8 @ 4953
		63-1125 [2]	7.8 @ 4953
FXDI Dyna Super Glide F/I	88 CI - Exc. lower fairings	63-1125P [2]	7.8 @ 4953
		63-1125 [2]	7.8 @ 4953
FXDI35 35th Anniv. Super Glide F/I	88 CI - Exc. lower fairings	63-1125P [2]	7.8 @ 4953
FXDLI Dyna Low Rider F/I	88 CI - Exc. lower fairings	63-1125P [2]	7.8 @ 4953
		63-1125 [2]	7.8 @ 4953
FXDWGI Dyna Wide Glide F/I	88 CI - Exc. lower fairings	63-1125P [2]	7.8 @ 4953
		63-1125 [2]	7.8 @ 4953
FXSTBI Night Train F/I	88 CI - Exc. lower fairings	63-1125P [2]	7.8 @ 4953
		63-1125 [2]	7.8 @ 4953
FXSTDI Softail Deuce F/I	88 CI - Exc. lower fairings	63-1125P [2]	7.8 @ 4953
		63-1125 [2]	7.8 @ 4953
FXSTI Softail Standard F/I	88 CI - Exc. lower fairings	63-1125P [2]	7.8 @ 4953
		63-1125 [2]	7.8 @ 4953
2005 HARLEY DAVIDSON			
FLHRCI Road King Classic F/I	88 CI - Exc. lower fairings	63-1125P [2]	7.8 @ 4953
		63-1125 [2]	7.8 @ 4953
FLHRI Road King F/I	88 CI - Exc. lower fairings	63-1125P [2]	7.8 @ 4953
		63-1125 [2]	7.8 @ 4953
FLHRSI Road King Custom F/I	88 CI - Exc. lower fairings	63-1125P [2]	7.8 @ 4953
		63-1125 [2]	7.8 @ 4953
FLHTCI Electra Glide Classic F/I	88 CI - Exc. lower fairings	63-1125P [2]	7.8 @ 4953
		63-1125 [2]	7.8 @ 4953

1) Street legal in all US states. 2) Street legal in most states, but not legal for use in California or other states with similar emission control regulations.
* Estimated horsepower gains are based on specific or similar vehicle dyno tests. Results will vary. See Page 479 for more information.
Partial Listing - Complete List of Vehicles and Applications at knfilters.com. See page 5 for information on intake tube materials/colors.

2005 HARLEY DAVIDSON

Vehicle	Engine Type	Intake Kit	Estimated Horsepower*
FLHTCUI Electra Glide Ultra Classic F/I	88 CI - Exc. lower fairings	63-1125P [2]	7.8 @ 4953
		63-1125 [2]	7.8 @ 4953
FLHTI Electra Glide Standard F/I	88 CI - Exc. lower fairings	63-1125P [2]	7.8 @ 4953
		63-1125 [2]	7.8 @ 4953
FLSTCI Heritage Softail Classic F/I	88 CI - Exc. lower fairings	63-1125P [2]	7.8 @ 4953
		63-1125 [2]	7.8 @ 4953
FLSTFI Fat Boy F/I	88 CI - Exc. lower fairings	63-1125P [2]	7.8 @ 4953
		63-1125 [2]	7.8 @ 4953
FLSTNI Softail Deluxe F/I	88 CI - Exc. lower fairings	63-1125P [2]	7.8 @ 4953
		63-1125 [2]	7.8 @ 4953
FLTRI Road Glide F/I	88 CI - Exc. lower fairings	63-1125P [2]	7.8 @ 4953
		63-1125 [2]	7.8 @ 4953
FXDCI Dyna Super Glide Custom F/I	88 CI - Exc. lower fairings	63-1125P [2]	7.8 @ 4953
		63-1125 [2]	7.8 @ 4953
FXDI Dyna Super Glide F/I	88 CI - Exc. lower fairings	63-1125P [2]	7.8 @ 4953
		63-1125 [2]	7.8 @ 4953
FXDLI Dyna Low Rider F/I	88 CI - Exc. lower fairings	63-1125P [2]	7.8 @ 4953
		63-1125 [2]	7.8 @ 4953
FXDWGI Dyna Wide Glide F/I	88 CI - Exc. lower fairings	63-1125P [2]	7.8 @ 4953
		63-1125 [2]	7.8 @ 4953
FXDXI Dyna Super Glide Sport F/I	88 CI - Exc. lower fairings	63-1125P [2]	7.8 @ 4953
		63-1125 [2]	7.8 @ 4953
FXSTBI Night Train F/I	88 CI - Exc. lower fairings	63-1125P [2]	7.8 @ 4953
		63-1125 [2]	7.8 @ 4953
FXSTDI Softail Deuce F/I	88 CI - Exc. lower fairings	63-1125P [2]	7.8 @ 4953
		63-1125 [2]	7.8 @ 4953
FXSTI Softail Standard F/I	88 CI - Exc. lower fairings	63-1125P [2]	7.8 @ 4953
		63-1125 [2]	7.8 @ 4953

2004 HARLEY DAVIDSON

Vehicle	Engine Type	Intake Kit	Estimated Horsepower*
FLHRCI Road King Classic F/I	88 CI - Exc. lower fairings	63-1125P [2]	7.8 @ 4953
		63-1125 [2]	7.8 @ 4953
FLHRI Road King F/I	88 CI - Exc. lower fairings	63-1125P [2]	7.8 @ 4953
		63-1125 [2]	7.8 @ 4953

2004 HARLEY DAVIDSON

Vehicle	Engine Type	Intake Kit	Estimated Horsepower*
FLHRSI Road King Custom F/I	88 CI - Exc. lower fairings	63-1125P [2]	7.8 @ 4953
		63-1125 [2]	7.8 @ 4953
FLHTCI Electra Glide Classic F/I	88 CI - Exc. lower fairings	63-1125P [2]	7.8 @ 4953
		63-1125 [2]	7.8 @ 4953
FLHTCUI Electra Glide Ultra Classic F/I	88 CI - Exc. lower fairings	63-1125P [2]	7.8 @ 4953
		63-1125 [2]	7.8 @ 4953
FLSTCI Heritage Softail Classic F/I	88 CI - Exc. lower fairings	63-1125P [2]	7.8 @ 4953
		63-1125 [2]	7.8 @ 4953
FLSTFI Fat Boy F/I	88 CI - Exc. lower fairings	63-1125P [2]	7.8 @ 4953
		63-1125 [2]	7.8 @ 4953
FLTRI Road Glide F/I	88 CI - Exc. lower fairings	63-1125P [2]	7.8 @ 4953
		63-1125 [2]	7.8 @ 4953
FXDI Dyna Super Glide F/I	88 CI - Exc. lower fairings	63-1125P [2]	7.8 @ 4953
		63-1125 [2]	7.8 @ 4953
FXDLI Dyna Low Rider F/I	88 CI - Exc. lower fairings	63-1125P [2]	7.8 @ 4953
		63-1125 [2]	7.8 @ 4953
FXDWGI Dyna Wide Glide F/I	88 CI - Exc. lower fairings	63-1125P [2]	7.8 @ 4953
		63-1125 [2]	7.8 @ 4953
FXSTDI Softail Deuce F/I	88 CI - Exc. lower fairings	63-1125P [2]	7.8 @ 4953
		63-1125 [2]	7.8 @ 4953
FXSTI Softail Standard F/I	88 CI - Exc. lower fairings	63-1125P [2]	7.8 @ 4953
		63-1125 [2]	7.8 @ 4953

2003 HARLEY DAVIDSON

Vehicle	Engine Type	Intake Kit	Estimated Horsepower*
FLHRCI Road King Classic F/I	88 CI - Exc. lower fairings	63-1125P [2]	7.8 @ 4953
		63-1125 [2]	7.8 @ 4953
FLHRI Road King F/I	88 CI - Exc. lower fairings	63-1125P [2]	7.8 @ 4953
		63-1125 [2]	7.8 @ 4953
FLHTCI Electra Glide Classic F/I	88 CI - Exc. lower fairings	63-1125P [2]	7.8 @ 4953
		63-1125 [2]	7.8 @ 4953
FLHTCUI Electra Glide Ultra Classic F/I	88 CI - Exc. lower fairings	63-1125P [2]	7.8 @ 4953
		63-1125 [2]	7.8 @ 4953
FLHTI Electra Glide Standard F/I	88 CI - Exc. lower fairings	63-1125P [2]	7.8 @ 4953

1) Street legal in all US states. 2) Street legal in most states, but not legal for use in California or other states with similar emission control regulations.
* Estimated horsepower gains are based on specific or similar vehicle dyno tests. Results will vary. See Page 479 for more information.
Partial Listing - Complete List of Vehicles and Applications at knfilters.com. See page 5 for information on intake tube materials/colors.

HARLEY DAVIDSON AIR INTAKE SYSTEMS

Vehicle	Engine Type	Intake Kit	Estimated Horsepower*
2003 HARLEY DAVIDSON			
FLHTI Electra Glide Standard F/I	88 CI - Exc. lower fairings	63-1125 [2]	7.8 @ 4953
FLSTCI Heritage Softail Classic F/I	88 CI - Exc. lower fairings	63-1125P [2]	7.8 @ 4953
		63-1125 [2]	7.8 @ 4953
FLSTFI Fat Boy F/I	88 CI - Exc. lower fairings	63-1125P [2]	7.8 @ 4953
		63-1125 [2]	7.8 @ 4953
FLTRI Road Glide F/I	88 CI - Exc. lower fairings	63-1125P [2]	7.8 @ 4953
		63-1125 [2]	7.8 @ 4953
FXSTDI Softail Deuce F/I	88 CI - Exc. lower fairings	63-1125P [2]	7.8 @ 4953
		63-1125 [2]	7.8 @ 4953
FXSTI Softail Standard F/I	88 CI - Exc. lower fairings	63-1125P [2]	7.8 @ 4953
		63-1125 [2]	7.8 @ 4953
2002 HARLEY DAVIDSON			
FLHRCI Road King Classic F/I	88 CI - Exc. lower fairings	63-1125P [2]	7.8 @ 4953
		63-1125 [2]	7.8 @ 4953
FLHTCI Electra Glide Classic F/I	88 CI - Exc. lower fairings	63-1125P [2]	7.8 @ 4953
		63-1125 [2]	7.8 @ 4953
FLHTCUI Electra Glide Ultra Classic F/I	88 CI - Exc. lower fairings	63-1125P [2]	7.8 @ 4953
		63-1125 [2]	7.8 @ 4953
FLSTCI Heritage Softail Classic F/I	88 CI - Exc. lower fairings	63-1125P [2]	7.8 @ 4953
		63-1125 [2]	7.8 @ 4953
FLSTFI Fat Boy F/I	88 CI - Exc. lower fairings	63-1125P [2]	7.8 @ 4953
		63-1125 [2]	7.8 @ 4953
FXSTDI Softail Deuce F/I	88 CI - Exc. lower fairings	63-1125P [2]	7.8 @ 4953
		63-1125 [2]	7.8 @ 4953
FXSTI Softail Standard F/I	88 CI - Exc. lower fairings	63-1125P [2]	7.8 @ 4953
		63-1125 [2]	7.8 @ 4953
2001 HARLEY DAVIDSON			
FLSTFI Fat Boy F/I	88 CI - Exc. lower fairings	63-1125P [2]	7.8 @ 4953
		63-1125 [2]	7.8 @ 4953
FXSTDI Softail Deuce F/I	88 CI - Exc. lower fairings	63-1125P [2]	7.8 @ 4953
		63-1125 [2]	7.8 @ 4953
2013 HONDA			
Fit	1.5L L4 F/I	69-1017TTK [2]	4.5 @ 5900
2012 HONDA			
Accord	2.4L L4 F/I	69-1211TTK [2]	11.1 @ 5600

Vehicle	Engine Type	Intake Kit	Estimated Horsepower*
2012 HONDA			
Accord	3.5L V6 F/I	69-1210TS [2]	10.2 @ 5217
Civic Si	2.4L L4 F/I	69-1019TS [2]	10.6 @ 5400
Crosstour	3.5L V6 F/I	69-1210TS [2]	10.2 @ 5217
CR-Z	1.5L L4 F/I	69-1018TS [2]	4.8 @ 5049
Fit	1.5L L4 F/I	69-1017TTK [2]	4.5 @ 5900
2011 HONDA			
Accord	2.4L L4 F/I	69-1211TTK [2]	11.1 @ 5600
Accord	3.5L V6 F/I - w/mass air	69-1210TS [2]	10.2 @ 5217
Accord Crosstour	3.5L V6 F/I - w/mass air	69-1210TS [2]	10.2 @ 5217
Civic	1.8L L4 F/I - US	69-1013TS [2]	5.7 @ 5700
Civic Si	2.0L L4 F/I	69-1014TS [2]	7.0 @ 6700
CR-Z	1.5L L4 F/I	69-1018TS [2]	4.8 @ 5049
Fit	1.5L L4 F/I	69-1017TTK [2]	4.5 @ 5900
2010 HONDA			
Accord	2.4L L4 F/I	69-1211TTK [2]	11.1 @ 5600
Accord	3.5L V6 F/I - w/mass air	69-1210TS [1]	10.2 @ 5217
Accord Crosstour	3.5L V6 F/I - w/mass air	69-1210TS [1]	10.2 @ 5217
Civic	1.8L L4 F/I - US	69-1013TS [1]	5.7 @ 5700
Civic Si	2.0L L4 F/I	69-1014TS [1]	7.0 @ 6700
Fit	1.5L L4 F/I	69-1017TTK [2]	4.5 @ 5900
2009 HONDA			
Accord	2.4L L4 F/I	69-1211TTK [2]	11.1 @ 5600
Accord	3.5L V6 F/I - w/mass air	69-1210TS [1]	10.2 @ 5217
Civic	1.8L L4 F/I - US	69-1013TS [1]	5.7 @ 5700
Civic Si	2.0L L4 F/I	69-1014TS [1]	7.0 @ 6700
Fit	1.5L L4 F/I	69-1017TTK [2]	4.5 @ 5900
2008 HONDA			
Accord	2.4L L4 F/I	69-1211TTK [2]	11.1 @ 5600
Accord	3.5L V6 F/I - w/mass air	69-1210TS [1]	10.2 @ 5217
Accord VIII	2.0L L4 F/I - Non-US	69-1206TP [2]	3.9 @ 5097
Accord VIII	2.4L L4 F/I - Non-US	69-1206TP [2]	3.9 @ 5097
		69-0025TP [2]	4.2 @ 5300
Civic	1.8L L4 F/I - US	69-1013TS [1]	5.7 @ 5700
Civic Si	2.0L L4 F/I	69-1014TS [1]	7.0 @ 6700
Fit	1.5L L4 F/I	69-1016-1TS [1]	5.0 @ 5500
Ridgeline	3.5L V6 F/I	77-3515KP [1]	9.7 @ 5159
		57-3515 [1]	10.7 @ 5159
S2000	2.2L L4 F/I	63-3514 [2]	9.6 @ 6500
2007 HONDA			
Accord	2.4L L4 F/I - SULEV	69-1209TS [1]	7.1 @ 5111
Accord	3.0L V6 F/I	69-1207TR [1]	10.4 @ 5522
		69-1207TP [1]	10.4 @ 5522
Accord VIII	2.0L L4 F/I - Non-US	69-1206TP [2]	3.9 @ 5097
Accord VIII	2.4L L4 F/I - Non-US	69-1206TP [2]	3.9 @ 5097
		69-0025TP [2]	4.2 @ 5300
Civic	1.8L L4 F/I - US	69-1013TS [1]	5.7 @ 5700
Civic Si	2.0L L4 F/I	69-1014TS [1]	7.0 @ 6700
Fit	1.5L L4 F/I	69-1016-1TS [1]	5.0 @ 5500
Ridgeline	3.5L V6 F/I	77-3515KP [1]	9.7 @ 5159
		57-3515 [1]	10.7 @ 5159
S2000	2.0L L4 F/I	69-1040TWR [2]	5.6 @ 5220
		69-1040TP [2]	5.6 @ 5220
		63-3514 [2]	9.6 @ 6500

1) Street legal in all US states. 2) Street legal in most states, but not legal for use in California or other states with similar emission control regulations.
* Estimated horsepower gains are based on specific or similar vehicle dyno tests. Results will vary. See Page 479 for more information.
Partial Listing - Complete List of Vehicles and Applications at knfilters.com. See page 5 for information on intake tube materials/colors.

Vehicle	Engine Type	Intake Kit	Estimated Horsepower*
2007 HONDA			
S2000	2.2L L4 F/I	57-3514 [1]	9.6 @ 6400
2006 HONDA			
Accord	2.4L L4 F/I - SULEV	69-1209TS [1]	7.1 @ 5111
Accord	2.4L L4 F/I - w/o mass air, Not CARB exempt for LEV II SULEV Vehicles	69-1206TP [1]	3.9 @ 5097
Accord	3.0L V6 F/I	69-1207TR [1]	10.4 @ 5522
		69-1207TP [1]	10.4 @ 5522
Accord VIII	2.0L L4 F/I - Non-US	69-1206TP [2]	3.9 @ 5097
Accord VIII	2.4L L4 F/I - Non-US	69-1206TP [2]	3.9 @ 5097
		69-0025TP [2]	4.2 @ 5300
Civic	1.8L L4 F/I - US	69-1013TS [1]	5.7 @ 5700
Civic Si	2.0L L4 F/I	69-1014TS [1]	7.0 @ 6700
Civic VI	1.6L L4 F/I	69-1008TS [2]	5.0 @ 5200
		69-1008TB [2]	5.0 @ 5200
		69-1007TS [2]	4.9 @ 6237
Element	2.4L L4 F/I	69-1015TP [1]	7.0 @ 4800
		69-1015TB [1]	7.0 @ 4800
Ridgeline	3.5L V6 F/I	77-3515KP [1]	9.7 @ 5159
		57-3515 [1]	10.7 @ 5159
S2000	2.0L L4 F/I	69-1040TWR [2]	5.6 @ 5220
		69-1040TP [2]	5.6 @ 5220
		63-3514 [2]	9.6 @ 6500
S2000	2.2L L4 F/I	57-3514 [1]	9.6 @ 6400
2005 HONDA			
Accord	2.4L L4 F/I - SULEV	69-1209TS [1]	7.1 @ 5111
Accord	2.4L L4 F/I - w/o mass air, Not CARB exempt for LEV II SULEV Vehicles	69-1206TP [1]	3.9 @ 5097
Accord	3.0L V6 F/I	69-1207TR [1]	10.4 @ 5522
		69-1207TP [1]	10.4 @ 5522
Accord VIII	2.0L L4 F/I - Non-US	69-1206TP [2]	3.9 @ 5097
Accord VIII	2.4L L4 F/I - Non-US	69-1206TP [2]	3.9 @ 5097
		69-0025TP [2]	4.2 @ 5300
Civic DX	1.7L L4 F/I	69-1008TS [1]	5.0 @ 5200
		69-1008TB [1]	5.0 @ 5200
		57-3513 [1]	4.8 @ 6200
Civic EX	1.7L L4 F/I	69-1008TS [1]	5.0 @ 5200
		69-1008TB [1]	5.0 @ 5200
		57-3513 [1]	4.8 @ 6200
Civic LX	1.7L L4 F/I	69-1008TS [1]	5.0 @ 5200
		69-1008TB [1]	5.0 @ 5200
		57-3513 [1]	4.8 @ 6200
Civic Si	1.7L L4 F/I	69-1008TS [2]	5.0 @ 5200
		69-1008TB [2]	5.0 @ 5200
Civic Si	2.0L L4 F/I	69-1009TWR [2]	10.5 @ 7014
		69-1009TR [2]	10.5 @ 7014
		69-1009TP [2]	10.5 @ 7014
Civic Value Package	1.7L L4 F/I	69-1008TS [2]	5.0 @ 5200
		69-1008TB [2]	5.0 @ 5200
Civic VI	1.6L L4 F/I	69-1008TS [2]	5.0 @ 5200
		69-1008TB [2]	5.0 @ 5200
		69-1007TS [2]	4.9 @ 6237
Civic VI	1.7L L4 F/I	69-1008TS [2]	5.0 @ 5200
		69-1008TB [2]	5.0 @ 5200
Civic VI	1.7L L4 F/I - 5 spd.	69-1007TS [2]	4.9 @ 6237
Civic VI	2.0L L4 F/I - 200BHP	69-1009TWR [2]	10.5 @ 7014
		69-1009TR [2]	10.5 @ 7014
2005 HONDA			
Civic VI	2.0L L4 F/I - 200BHP	69-1009TP [2]	10.5 @ 7014
Element	2.4L L4 F/I	69-1015TP [1]	7.0 @ 4800
		69-1015TB [1]	7.0 @ 4800
S2000	2.0L L4 F/I	69-1040TWR [2]	5.6 @ 5220
		69-1040TP [2]	5.6 @ 5220
		63-3514 [2]	9.6 @ 6500
S2000	2.2L L4 F/I	69-1040TWR [1]	5.6 @ 5220
		69-1040TP [1]	5.6 @ 5220
		57-3514 [1]	9.6 @ 6400
TRX450R	444	63-1127 [2]	3.0 @ 6200
2004 HONDA			
Accord	2.4L L4 F/I - SULEV	69-1209TS [1]	7.1 @ 5111
Accord	2.4L L4 F/I - w/o mass air, Not CARB exempt for LEV II SULEV Vehicles	69-1206TP [1]	3.9 @ 5097
Accord	3.0L V6 F/I	69-1207TR [1]	10.4 @ 5522
		69-1207TP [1]	10.4 @ 5522
Accord VIII	2.0L L4 F/I - Non-US	69-1206TP [2]	3.9 @ 5097
Accord VIII	2.4L L4 F/I - Non-US	69-1206TP [2]	3.9 @ 5097
		69-0025TP [2]	4.2 @ 5300
Civic DX	1.7L L4 F/I	69-1008TS [1]	5.0 @ 5200
		69-1008TB [1]	5.0 @ 5200
		57-3513 [1]	4.8 @ 6200
Civic DX	1.7L L4 F/I - Manual Trans.	69-1007TS [1]	4.9 @ 6237
Civic EX	1.7L L4 F/I	69-1008TS [1]	5.0 @ 5200
		69-1008TB [1]	5.0 @ 5200
		57-3513 [1]	4.8 @ 6200
Civic EX	1.7L L4 F/I - Manual Trans.	69-1007TS [1]	4.9 @ 6237
Civic HX	1.7L L4 F/I - Manual Trans.	69-1007TS [1]	4.9 @ 6237
Civic LX	1.7L L4 F/I	69-1008TS [1]	5.0 @ 5200
		69-1008TB [1]	5.0 @ 5200
		57-3513 [1]	4.8 @ 6200
Civic LX	1.7L L4 F/I - Manual Trans.	69-1007TS [1]	4.9 @ 6237
Civic Si	1.7L L4 F/I	69-1008TS [2]	5.0 @ 5200
		69-1008TB [2]	5.0 @ 5200
Civic Si	1.7L L4 F/I - Manual Trans.	69-1007TS [1]	4.9 @ 6237
Civic Si	2.0L L4 F/I	69-1009TWR [1]	10.5 @ 7014
		69-1009TR [1]	10.5 @ 7014
		69-1009TP [1]	10.5 @ 7014
Civic Value Package	1.7L L4 F/I	69-1008TS [2]	5.0 @ 5200
		69-1008TB [2]	5.0 @ 5200
Civic Value Package	1.7L L4 F/I - Manual Trans.	69-1007TS [1]	4.9 @ 6237
Civic VI	1.6L L4 F/I	69-1008TS [2]	5.0 @ 5200
		69-1008TB [2]	5.0 @ 5200
		69-1007TS [2]	4.9 @ 6237
Civic VI	1.7L L4 F/I	69-1008TS [2]	5.0 @ 5200
		69-1008TB [2]	5.0 @ 5200
Civic VI	1.7L L4 F/I - 5 spd.	69-1007TS [2]	4.9 @ 6237
Civic VI	2.0L L4 F/I - 200BHP	69-1009TWR [2]	10.5 @ 7014
		69-1009TR [2]	10.5 @ 7014
		69-1009TP [2]	10.5 @ 7014
CR-V	2.4L L4 F/I	69-0015TS [2]	2.8 @ 6500
		69-0015TR [2]	2.8 @ 6500
Element	2.4L L4 F/I	69-1015TP [1]	7.0 @ 4800
		69-1015TB [1]	7.0 @ 4800

1) Street legal in all US states. 2) Street legal in most states, but not legal for use in California or other states with similar emission control regulations.
* Estimated horsepower gains are based on specific or similar vehicle dyno tests. Results will vary. See Page 479 for more information.
Partial Listing - Complete List of Vehicles and Applications at knfilters.com. See page 5 for information on intake tube materials/colors.

Vehicle	Engine Type	Intake Kit	Estimated Horsepower*
2004 HONDA			
S2000	2.0L L4 F/I	69-1040TWR [2]	5.6 @ 5220
		69-1040TP [2]	5.6 @ 5220
		63-3514 [2]	9.6 @ 6500
S2000	2.2L L4 F/I	69-1040TWR [1]	5.6 @ 5220
		69-1040TP [1]	5.6 @ 5220
		57-3514 [1]	9.6 @ 6400
TRX450R	444	63-1127 [2]	3.0 @ 6200
2003 HONDA			
Accord	2.4L L4 F/I - Not CARB exempt for LEV II SULEV Vehicles, w/o mass air	69-1206TP [1]	3.9 @ 5097
Accord	3.0L V6 F/I	69-1207TR [1]	10.4 @ 5522
		69-1207TP [1]	10.4 @ 5522
Accord VIII	2.0L L4 F/I - Non-US	69-1206TP [2]	3.9 @ 5097
Accord VIII	2.4L L4 F/I - Non-US	69-1206TP [2]	3.9 @ 5097
		69-0025TP [2]	4.2 @ 5300
Civic DX	1.7L L4 F/I	69-1008TS [1]	5.0 @ 5200
		69-1008TB [1]	5.0 @ 5200
		57-3513 [1]	4.8 @ 6200
Civic DX	1.7L L4 F/I - Manual Trans.	69-1007TS [1]	4.9 @ 6237
Civic EX	1.7L L4 F/I	69-1008TS [1]	5.0 @ 5200
		69-1008TB [1]	5.0 @ 5200
		57-3513 [1]	4.8 @ 6200
Civic EX	1.7L L4 F/I - Manual Trans.	69-1007TS [1]	4.9 @ 6237
Civic HX	1.7L L4 F/I - Manual Trans.	69-1007TS [1]	4.9 @ 6237
Civic LX	1.7L L4 F/I	69-1008TS [1]	5.0 @ 5200
		69-1008TB [1]	5.0 @ 5200
		57-3513 [1]	4.8 @ 6200
Civic LX	1.7L L4 F/I - Manual Trans.	69-1007TS [1]	4.9 @ 6237
Civic Si	1.7L L4 F/I	69-1008TS [2]	5.0 @ 5200
		69-1008TB [2]	5.0 @ 5200
Civic Si	1.7L L4 F/I - Manual Trans.	69-1007TS [1]	4.9 @ 6237
Civic Si	2.0L L4 F/I	69-1009TWR [1]	10.5 @ 7014
		69-1009TR [1]	10.5 @ 7014
		69-1009TP [1]	10.5 @ 7014
Civic VI	1.6L L4 F/I	69-1008TS [2]	5.0 @ 5200
		69-1008TB [2]	5.0 @ 5200
		69-1007TS [2]	4.9 @ 6237
Civic VI	1.7L L4 F/I	69-1008TS [2]	5.0 @ 5200
		69-1008TB [2]	5.0 @ 5200
Civic VI	1.7L L4 F/I - 5 spd.	69-1007TS [2]	4.9 @ 6237
Civic VI	2.0L L4 F/I	69-1009TWR [2]	10.5 @ 7014
		69-1009TR [2]	10.5 @ 7014
		69-1009TP [2]	10.5 @ 7014
CR-V	2.4L L4 F/I	69-0015TS [2]	2.8 @ 6500
		69-0015TR [2]	2.8 @ 6500
Element	2.4L L4 F/I	69-1015TP [1]	7.0 @ 4800
		69-1015TB [1]	7.0 @ 4800
S2000	2.0L L4 F/I	69-1040TWR [1]	5.6 @ 5220
		69-1040TP [1]	5.6 @ 5220
		57-3514 [1]	9.6 @ 6400
2002 HONDA			
Accord	3.0L V6 F/I	69-1203TP [1]	9.5 @ 5924
Accord VII	2.2L L4 F/I	69-1500TWR [2]	13.0 @ 7000
		69-1500TP [2]	13.0 @ 7000
2002 HONDA			
Civic DX	1.7L L4 F/I	69-1008TS [1]	5.0 @ 5200
		69-1008TB [1]	5.0 @ 5200
		57-3513 [1]	4.8 @ 6200
Civic DX	1.7L L4 F/I - Manual Trans.	69-1007TS [1]	4.9 @ 6237
Civic EX	1.7L L4 F/I	69-1008TS [1]	5.0 @ 5200
		69-1008TB [1]	5.0 @ 5200
		57-3513 [1]	4.8 @ 6200
Civic EX	1.7L L4 F/I - Manual Trans.	69-1007TS [1]	4.9 @ 6237
Civic LX	1.7L L4 F/I	69-1008TS [1]	5.0 @ 5200
		69-1008TB [1]	5.0 @ 5200
		57-3513 [1]	4.8 @ 6200
Civic LX	1.7L L4 F/I - Manual Trans.	69-1007TS [1]	4.9 @ 6237
Civic Si	1.7L L4 F/I	69-1008TS [2]	5.0 @ 5200
		69-1008TB [2]	5.0 @ 5200
Civic Si	1.7L L4 F/I - Manual Trans.	69-1007TS [1]	4.9 @ 6237
Civic Si	2.0L L4 F/I	69-1009TWR [1]	10.5 @ 7014
		69-1009TR [1]	10.5 @ 7014
		69-1009TP [1]	10.5 @ 7014
CR-V	2.4L L4 F/I	69-0015TS [2]	2.8 @ 6500
		69-0015TR [2]	2.8 @ 6500
S2000	2.0L L4 F/I	69-1040TWR [1]	5.6 @ 5220
		69-1040TP [1]	5.6 @ 5220
		57-3514 [1]	9.6 @ 6400
2001 HONDA			
Accord	3.0L V6 F/I	69-1203TP [1]	9.5 @ 5924
Accord VII	2.2L L4 F/I	69-1500TWR [2]	13.0 @ 7000
		69-1500TP [2]	13.0 @ 7000
Civic DX	1.7L L4 F/I	69-1008TS [1]	5.0 @ 5200
		69-1008TB [1]	5.0 @ 5200
		57-3513 [1]	4.8 @ 6200
Civic DX	1.7L L4 F/I - Manual Trans.	69-1007TS [1]	4.9 @ 6237
Civic EX	1.7L L4 F/I	69-1008TS [1]	5.0 @ 5200
		69-1008TB [1]	5.0 @ 5200
		57-3513 [1]	4.8 @ 6200
Civic EX	1.7L L4 F/I - Manual Trans.	69-1007TS [1]	4.9 @ 6237
Civic HX	1.7L L4 F/I - Manual Trans.	69-1007TS [1]	4.9 @ 6237
Civic LX	1.7L L4 F/I	69-1008TS [1]	5.0 @ 5200
		69-1008TB [1]	5.0 @ 5200
		57-3513 [1]	4.8 @ 6200
Civic LX	1.7L L4 F/I - Manual Trans.	69-1007TS [1]	4.9 @ 6237
S2000	2.0L L4 F/I	69-1040TWR [1]	5.6 @ 5220
		69-1040TP [1]	5.6 @ 5220
		57-3514 [1]	9.6 @ 6400
2000 HONDA			
Accord	3.0L V6 F/I	69-1203TP [1]	9.5 @ 5924
Accord VII	2.2L L4 F/I	69-1500TWR [2]	13.0 @ 7000
		69-1500TP [2]	13.0 @ 7000
Civic EX	1.6L L4 F/I	69-1011TP [1]	5.3 @ 4692
Civic Si	1.6L L4 F/I	69-1010TP [1]	10.6 @ 7100
		57-3512 [1]	5.8 @ 7500
Civic Type R	2.0L L4 F/I	69-1009TWR [2]	10.5 @ 7014
		69-1009TR [2]	10.5 @ 7014
		69-1009TP [2]	10.5 @ 7014
Civic V	1.5L L4 F/I - 3/4-Door	69-1011TP [2]	5.3 @ 4692

1) Street legal in all US states. 2) Street legal in most states, but not legal for use in California or other states with similar emission control regulations.
* Estimated horsepower gains are based on specific or similar vehicle dyno tests. Results will vary. See Page 479 for more information.
Partial Listing - Complete List of Vehicles and Applications at knfilters.com. See page 5 for information on intake tube materials/colors.

Vehicle	Engine Type	Intake Kit	Estimated Horsepower*
2000 HONDA			
S2000	2.0L L4 F/I	69-1040TWR [1]	5.6 @ 5220
		69-1040TP [1]	5.6 @ 5220
		57-3514 [1]	9.6 @ 6400
1999 HONDA			
Accord	3.0L V6 F/I	69-1203TP [1]	9.5 @ 5924
Accord VII	2.2L L4 F/I	69-1500TWR [2]	13.0 @ 7000
		69-1500TP [2]	13.0 @ 7000
Civic EX	1.6L L4 F/I	69-1011TP [1]	5.3 @ 4692
Civic HX	1.6L L4 F/I - Manual Trans.	63-1016 [2]	5.6 @ 7200
Civic Si	1.6L L4 F/I	69-1010TP [1]	10.6 @ 7100
		57-3512 [1]	5.8 @ 7500
Prelude	2.2L L4 F/I - US	69-1302TP [1]	7.1 @ 6821
1998 HONDA			
Accord VII	2.2L L4 F/I	69-1500TWR [2]	13.0 @ 7000
		69-1500TP [2]	13.0 @ 7000
Civic EX	1.6L L4 F/I	69-1011TP [1]	5.3 @ 4692
		63-1016 [2]	5.6 @ 7200
Civic HX	1.6L L4 F/I - Manual Trans.	63-1016 [2]	5.6 @ 7200
Prelude	2.2L L4 F/I - US	69-1302TP [1]	7.1 @ 6821
1997 HONDA			
Accord	2.2L L4 F/I	69-1208TS [1]	5.9 @ 5411
Accord V	2.2L L4 F/I	69-1208TS [2]	5.9 @ 5411
Accord VI	2.2L L4 F/I	69-1208TS [2]	5.9 @ 5411
Civic EX	1.6L L4 F/I	69-1011TP [1]	5.3 @ 4692
		63-1016 [2]	5.6 @ 7200
Civic HX	1.6L L4 F/I - Manual Trans.	63-1016 [2]	5.6 @ 7200
Civic V	1.5L L4 F/I - 3/4-Door	69-1011TP [2]	5.3 @ 4692
Prelude	2.2L L4 F/I - US	69-1302TP [1]	7.1 @ 6821
1996 HONDA			
Accord	2.2L L4 F/I	69-1208TS [1]	5.9 @ 5411
Accord V	2.2L L4 F/I	69-1208TS [2]	5.9 @ 5411
Accord VI	2.2L L4 F/I	69-1208TS [2]	5.9 @ 5411
Civic EX	1.6L L4 F/I	69-1011TP [1]	5.3 @ 4692
		63-1016 [2]	5.6 @ 7200
Civic HX	1.6L L4 F/I - Manual Trans.	63-1016 [2]	5.6 @ 7200
Civic V	1.5L L4 F/I	69-1011TP [2]	5.3 @ 4692
1995 HONDA			
Accord	2.2L L4 F/I	69-1208TS [1]	5.9 @ 5411
Civic del Sol	1.5L L4 F/I	57-3504 [1]	3.7 @ 6100
Civic del Sol	1.6L L4 F/I	57-3504 [1]	3.7 @ 6100
Civic DX	1.5L L4 F/I	63-1017 [2]	4.7 @ 6000
		57-3504 [1]	3.7 @ 6100
Civic DX Hatchback	1.5L L4 F/I	63-1017 [2]	4.7 @ 6000
Civic EX	1.6L L4 F/I	63-1017 [2]	4.7 @ 6000
		57-3504 [1]	3.7 @ 6100
Civic IV	1.5L L4 F/I - 90BHP	69-1502TS [2]	
		69-1502TP [2]	
Civic LX	1.5L L4 F/I	63-1017 [2]	4.7 @ 6000
Civic Si	1.6L L4 F/I	63-1017 [2]	4.7 @ 6000
Civic V	1.5L L4 F/I	69-1011TP [2]	5.3 @ 4692
1994 HONDA			
Accord	2.2L L4 F/I	69-1208TS [1]	5.9 @ 5411
Civic CX	1.5L L4 F/I	63-1017 [2]	4.7 @ 6000
		57-3504 [1]	3.7 @ 6100
1994 HONDA			
Civic del Sol	1.5L L4 F/I	57-3504 [1]	3.7 @ 6100
Civic del Sol	1.6L L4 F/I	57-3504 [1]	3.7 @ 6100
Civic DX	1.5L L4 F/I	63-1017 [2]	4.7 @ 6000
		57-3504 [1]	3.7 @ 6100
Civic DX Hatchback	1.5L L4 F/I	63-1017 [2]	4.7 @ 6000
Civic EX	1.6L L4 F/I	63-1017 [2]	4.7 @ 6000
		57-3504 [1]	3.7 @ 6100
Civic IV	1.5L L4 F/I - 90BHP	69-1502TS [2]	
		69-1502TP [2]	
Civic LX	1.5L L4 F/I	63-1017 [2]	4.7 @ 6000
		57-3504 [1]	3.7 @ 6100
Civic Si	1.6L L4 F/I	63-1017 [2]	4.7 @ 6000
		57-3504 [1]	3.7 @ 6100
1993 HONDA			
Civic del Sol	1.5L L4 F/I	57-3504 [1]	3.7 @ 6100
Civic del Sol	1.6L L4 F/I	57-3504 [1]	3.7 @ 6100
Civic DX	1.5L L4 F/I	63-1017 [2]	4.7 @ 6000
		57-3504 [1]	3.7 @ 6100
Civic DX Hatchback	1.5L L4 F/I	63-1017 [2]	4.7 @ 6000
Civic EX	1.6L L4 F/I	63-1017 [2]	4.7 @ 6000
		57-3504 [1]	3.7 @ 6100
Civic IV	1.5L L4 F/I - 90BHP	69-1502TS [2]	
		69-1502TP [2]	
Civic LX	1.5L L4 F/I	63-1017 [2]	4.7 @ 6000
		57-3504 [1]	3.7 @ 6100
Civic Si	1.6L L4 F/I	63-1017 [2]	4.7 @ 6000
1992 HONDA			
Civic DX	1.5L L4 F/I	63-1017 [2]	4.7 @ 6000
		57-3504 [1]	3.7 @ 6100
Civic DX Hatchback	1.5L L4 F/I	63-1017 [2]	4.7 @ 6000
Civic EX	1.6L L4 F/I	63-1017 [2]	4.7 @ 6000
		57-3504 [1]	3.7 @ 6100
Civic IV	1.5L L4 F/I - 90BHP	69-1502TS [2]	
		69-1502TP [2]	
Civic LX	1.5L L4 F/I	63-1017 [2]	4.7 @ 6000
Civic Si	1.6L L4 F/I	63-1017 [2]	4.7 @ 6000
1991 HONDA			
Civic	1.5L L4 F/I - exc. HF	57-3503 [1]	4.4 @ 5416
Civic	1.6L L4 F/I	57-3503 [1]	4.4 @ 5416
Civic IV	1.5L L4 F/I - 90BHP	69-1502TS [2]	
		69-1502TP [2]	
CRX	1.5L L4 F/I	57-3503 [1]	4.4 @ 5416
CRX	1.6L L4 F/I	57-3503 [1]	4.4 @ 5416
1990 HONDA			
Civic	1.5L L4 F/I	57-3503 [1]	4.4 @ 5416
Civic	1.6L L4 F/I	57-3503 [1]	4.4 @ 5416
CRX	1.5L L4 F/I	57-3503 [1]	4.4 @ 5416
CRX	1.6L L4 F/I	57-3503 [1]	4.4 @ 5416
1989 HONDA			
Civic	1.5L L4 F/I	57-3503 [1]	4.4 @ 5416
Civic	1.6L L4 F/I	57-3503 [1]	4.4 @ 5416
CRX	1.5L L4 F/I	57-3503 [1]	4.4 @ 5416
CRX	1.6L L4 F/I	57-3503 [1]	4.4 @ 5416
1988 HONDA			
Civic	1.5L L4 F/I	57-3503 [1]	4.4 @ 5416
Civic	1.6L L4 F/I	57-3503 [1]	4.4 @ 5416

1) Street legal in all US states. 2) Street legal in most states, but not legal for use in California or other states with similar emission control regulations.
* Estimated horsepower gains are based on specific or similar vehicle dyno tests. Results will vary. See Page 479 for more information.
Partial Listing - Complete List of Vehicles and Applications at knfilters.com. See page 5 for information on intake tube materials/colors.

AIR INTAKE SYSTEMS

Vehicle	Engine Type	Intake Kit	Estimated Horsepower*
1988 HONDA			
CRX	1.5L L4 F/I	57-3503 [1]	4.4 @ 5416
CRX	1.6L L4 F/I	57-3503 [1]	4.4 @ 5416
2009 HUMMER			
H2	6.2L V8 F/I	77-3037KP [2]	9.8 @ 4558
		63-3037 [2]	11.4 @ 4524
H3	3.7L L5 F/I	77-3065KP [2]	7.2 @ 4533
		63-3065 [2]	11.0 @ 4754
H3T	3.7L L5 F/I	77-3065KP [2]	7.2 @ 4533
		63-3065 [2]	11.0 @ 4754
2008 HUMMER			
H2	6.2L V8 F/I	77-3037KP [2]	9.8 @ 4558
		63-3037 [2]	11.4 @ 4524
H3	3.7L L5 F/I	77-3065KP [2]	7.2 @ 4533
		63-3065 [2]	11.0 @ 4754
2007 HUMMER			
H2	6.0L V8 F/I	77-3037KP [1]	9.8 @ 4558
		57-3037 [1]	11.4 @ 4524
H3	3.7L L5 F/I	77-3065KP [2]	7.2 @ 4533
		63-3065 [2]	11.0 @ 4754
2006 HUMMER			
H2	6.0L V8 F/I	77-3037KP [1]	9.8 @ 4558
		57-3037 [1]	11.4 @ 4524
H3	3.5L L5 F/I	77-3044KP [1]	16.2 @ 5849
		57-3043 [1]	18.6 @ 6001
2005 HUMMER			
H2	6.0L V8 F/I	77-3037KP [1]	9.8 @ 4558
		57-3037 [1]	11.4 @ 4524
2004 HUMMER			
H2	6.0L V8 F/I	77-3037KP [1]	9.8 @ 4558
		57-3037 [1]	11.4 @ 4524
2003 HUMMER			
H2	6.0L V8 F/I	77-3037KP [1]	9.8 @ 4558
		57-3037 [1]	11.4 @ 4524
2013 HYUNDAI			
Elantra	1.8L L4 F/I	69-5303TS [2]	5.6 @ 5383
Sonata	2.0L L4 F/I	69-5309TS [2]	7.6 @ 4861
Sonata	2.4L L4 F/I	69-5301TTK [2]	7.8 @ 5147
2012 HYUNDAI			
Elantra	1.8L L4 F/I	69-5303TS [2]	5.6 @ 5383
Genesis Coupe	2.0L L4 F/I	69-5302TTK [2]	7.1 @ 4000
Sonata	2.0L L4 F/I	69-5309TS [2]	7.6 @ 4861
Sonata	2.4L L4 F/I	69-5301TTK [2]	7.8 @ 5147
Veloster	1.6L L4 F/I	69-5304TS [2]	6.5 @ 6400
2011 HYUNDAI			
Elantra	1.8L L4 F/I	69-5303TS [2]	5.6 @ 5383
Genesis Coupe	2.0L L4 F/I	69-5302TTK [2]	7.1 @ 4000
Sonata	2.0L L4 F/I	69-5309TS [2]	7.6 @ 4861
Sonata	2.4L L4 F/I	69-5301TTK [2]	7.8 @ 5147
2010 HYUNDAI			
Genesis Coupe	2.0L L4 F/I	69-5302TTK [2]	7.1 @ 4000
2005 HYUNDAI			
Tiburon GT	2.7L V6 F/I	69-5300TS [2]	10.0 @ 5000
		69-5300TR [2]	10.0 @ 5000
2004 HYUNDAI			
Tiburon GT	2.7L V6 F/I	69-5300TS [2]	10.0 @ 5000
		69-5300TR [2]	10.0 @ 5000
2003 HYUNDAI			
Tiburon GT	2.7L V6 F/I	69-5300TS [1]	10.0 @ 5000
		69-5300TR [1]	10.0 @ 5000
2012 INFINITI			
G37	3.7L V6 F/I	69-7078TS [2]	14.2 @ 5600
2011 INFINITI			
G37	3.7L V6 F/I	69-7078TS [2]	14.2 @ 5600
2010 INFINITI			
G37	3.7L V6 F/I	69-7078TS [2]	14.2 @ 5600
QX56	5.6L V8 F/I	77-6012KP [1]	7.3 @ 4914
		63-6012 [2]	11.2 @ 5073
		57-6012 [1]	11.2 @ 5073
2009 INFINITI			
G37	3.7L V6 F/I	69-7078TS [2]	14.2 @ 5600
QX56	5.6L V8 F/I	77-6012KP [1]	7.3 @ 4914
		63-6012 [2]	11.2 @ 5073
		57-6012 [1]	11.2 @ 5073
2008 INFINITI			
G35	3.5L V6 F/I - Sedan	69-7082TS [1]	8.1 @ 5960
G37	3.7L V6 F/I	69-7078TS [2]	14.2 @ 5600
QX56	5.6L V8 F/I	77-6012KP [1]	7.3 @ 4914
		63-6012 [2]	11.2 @ 5073
		57-6012 [1]	11.2 @ 5073
2007 INFINITI			
G35	3.5L V6 F/I - Sedan	69-7082TS [1]	8.1 @ 5960
QX56	5.6L V8 F/I	77-6012KP [1]	7.3 @ 4914
		57-6012 [1]	11.2 @ 5073
2006 INFINITI			
G35	3.5L V6 F/I - Coupe	69-7080-1TS [1]	9.5 @ 6101
G35	3.5L V6 F/I - Sedan	69-7081-1TS [1]	5.1 @ 5688
QX56	5.6L V8 F/I	77-6012KP [1]	7.3 @ 4914
		57-6012 [1]	11.2 @ 5073
2005 INFINITI			
G35	3.5L V6 F/I - Coupe	69-7080-1TS [1]	9.5 @ 6101
G35	3.5L V6 F/I - Sedan	69-7081-1TS [1]	5.1 @ 5688
QX56	5.6L V8 F/I	77-6012KP [1]	7.3 @ 4914
		57-6012 [1]	11.2 @ 5073
2004 INFINITI			
G35	3.5L V6 F/I - Coupe	69-7080-1TS [1]	9.5 @ 6101
G35	3.5L V6 F/I - Sedan	69-7081-1TS [1]	5.1 @ 5688
QX56	5.6L V8 F/I	77-6012KP [1]	7.3 @ 4914
		57-6012 [1]	11.2 @ 5073
2003 INFINITI			
G35	3.5L V6 F/I - Coupe	69-7080-1TS [1]	9.5 @ 6101
G35	3.5L V6 F/I - Sedan	69-7081-1TS [1]	5.1 @ 5688
2007 ISUZU			
Ascender	4.2L L6 F/I	77-3062KP [2]	9.3 @ 4850
		63-3062 [2]	9.5 @ 4725
2013 JEEP			
Grand Cherokee	3.6L V6 F/I	77-1560KTK [2]	10.8 @ 5447
Grand Cherokee	5.7L V8 F/I	77-1563KP [2]	15.0 @ 4500
		63-1563 [2]	17.0 @ 4944

1) Street legal in all US states. 2) Street legal in most states, but not legal for use in California or other states with similar emission control regulations.
* Estimated horsepower gains are based on specific or similar vehicle dyno tests. Results will vary. See Page 479 for more information.
Partial Listing - Complete List of Vehicles and Applications at knfilters.com. See page 5 for information on intake tube materials/colors.

Vehicle	Engine Type	Intake Kit	Estimated Horsepower*
2013 JEEP			
Wrangler	3.6L V6 F/I	77-1566KP [2]	10.2 @ 5600
		63-1566 [2]	12.2 @ 5600
2012 JEEP			
Grand Cherokee	3.6L V6 F/I	77-1560KTK [2]	10.8 @ 5447
Grand Cherokee	5.7L V8 F/I	77-1563KP [2]	15.0 @ 4500
		63-1563 [2]	17.0 @ 4944
Liberty	3.7L V6 F/I	77-1562KTK [2]	9.2 @ 4876
Wrangler	3.6L V6 F/I	77-1566KP [2]	10.2 @ 5600
		63-1566 [2]	12.2 @ 5600
2011 JEEP			
Grand Cherokee	3.6L V6 F/I	77-1560KTK [2]	10.8 @ 5447
Grand Cherokee	5.7L V8 F/I	77-1563KP [2]	15.0 @ 4500
		63-1563 [2]	17.0 @ 4944
Liberty	3.7L V6 F/I	77-1562KTK [2]	9.2 @ 4876
Wrangler	3.8L V6 F/I	77-1553KP [2]	7.9 @ 4807
		63-1553 [2]	8.2 @ 4807
2010 JEEP			
Commander	3.7L V6 F/I	77-1545KP [1]	6.9 @ 5184
		57-1545 [1]	7.6 @ 5132
Commander	5.7L V8 F/I	77-1549KP [2]	12.9 @ 5046
		63-1549 [2]	15.3 @ 5046
Compass	2.0L L4 F/I	63-1552 [2]	7.9 @ 4557
Compass	2.4L L4 F/I	57-1552 [1]	7.9 @ 4557
Grand Cherokee	3.7L V6 F/I	77-1545KP [1]	6.9 @ 5184
		57-1545 [1]	7.6 @ 5132
Grand Cherokee	5.7L V8 F/I	77-1549KP [2]	12.9 @ 5046
		63-1549 [2]	15.3 @ 5046
Grand Cherokee	6.1L V8 F/I	63-1555 [2]	12.0 @ 5000
		57-1555 [1]	12.0 @ 5000
Liberty	3.7L V6 F/I	77-1562KTK [2]	9.2 @ 4876
Patriot	2.0L L4 F/I	57-1552 [1]	7.9 @ 4557
Patriot	2.4L L4 F/I	57-1552 [1]	7.9 @ 4557
Wrangler	3.8L V6 F/I	77-1553KP [1]	7.9 @ 4807
		57-1553 [1]	8.2 @ 4807
2009 JEEP			
Commander	3.7L V6 F/I	77-1545KP [1]	6.9 @ 5184
		57-1545 [1]	7.6 @ 5132
Commander	4.7L V8 F/I	77-1548KP [1]	7.7 @ 4397
		57-1548 [1]	9.5 @ 4397
Commander	5.7L V8 F/I	77-1549KP [2]	12.9 @ 5046
		63-1549 [2]	15.3 @ 5046
Compass	2.0L L4 F/I	63-1552 [2]	7.9 @ 4557
Compass	2.4L L4 F/I	57-1552 [1]	7.9 @ 4557
Grand Cherokee	3.7L V6 F/I	77-1545KP [1]	6.9 @ 5184
		57-1545 [1]	7.6 @ 5132
Grand Cherokee	4.7L V8 F/I	77-1548KP [1]	7.7 @ 4397
		57-1548 [1]	9.5 @ 4397
Grand Cherokee	5.7L V8 F/I	77-1549KP [2]	12.9 @ 5046
		63-1549 [2]	15.3 @ 5046
Grand Cherokee	6.1L V8 F/I	63-1555 [2]	12.0 @ 5000
		57-1555 [1]	12.0 @ 5000
Liberty	3.7L V6 F/I	77-1559KP [1]	10.0 @ 4800
		63-1559 [2]	11.3 @ 4800
		57-1559 [1]	11.3 @ 4800
Patriot	2.0L L4 F/I	57-1552 [1]	7.9 @ 4557
Patriot	2.4L L4 F/I	57-1552 [1]	7.9 @ 4557
Wrangler	3.8L V6 F/I	77-1553KP [1]	7.9 @ 4807
Wrangler	3.8L V6 F/I	57-1553 [1]	8.2 @ 4807
2008 JEEP			
Commander	3.7L V6 F/I	77-1545KP [1]	6.9 @ 5184
		57-1545 [1]	7.6 @ 5132
Commander	4.7L V8 F/I	77-1548KP [1]	7.7 @ 4397
		57-1548 [1]	9.5 @ 4397
Commander	5.7L V8 F/I	77-1549KP [2]	12.9 @ 5046
		63-1549 [2]	15.3 @ 5046
Compass	2.0L L4 F/I	63-1552 [2]	7.9 @ 4557
Compass	2.4L L4 F/I	57-1552 [1]	7.9 @ 4557
Grand Cherokee	3.7L V6 F/I	77-1545KP [1]	6.9 @ 5184
		57-1545 [1]	7.6 @ 5132
Grand Cherokee	4.7L V8 F/I	77-1548KP [1]	7.7 @ 4397
		57-1548 [1]	9.5 @ 4397
Grand Cherokee	5.7L V8 F/I	77-1549KP [2]	12.9 @ 5046
		63-1549 [2]	15.3 @ 5046
Grand Cherokee	6.1L V8 F/I	63-1555 [2]	12.0 @ 5000
		57-1555 [1]	12.0 @ 5000
Liberty	3.7L V6 F/I	77-1559KP [1]	10.0 @ 4800
		63-1559 [2]	11.3 @ 4800
		57-1559 [1]	11.3 @ 4800
Patriot	2.0L L4 F/I	57-1552 [1]	7.9 @ 4557
Patriot	2.4L L4 F/I	57-1552 [1]	7.9 @ 4557
Wrangler	3.8L V6 F/I	77-1553KP [1]	7.9 @ 4807
		57-1553 [1]	8.2 @ 4807
2007 JEEP			
Commander	3.7L V6 F/I	77-1545KP [1]	6.9 @ 5184
		57-1545 [1]	7.6 @ 5132
Commander	4.7L V8 F/I	77-1548KP [1]	7.7 @ 4397
		57-1548 [1]	9.5 @ 4397
Commander	5.7L V8 F/I	77-1549KP [1]	12.9 @ 5046
		57-1549 [1]	15.3 @ 5046
Compass	2.0L L4 F/I	57-1552 [1]	7.9 @ 4557
Compass	2.4L L4 F/I	57-1552 [1]	7.9 @ 4557
Grand Cherokee	3.7L V6 F/I	77-1545KP [1]	6.9 @ 5184
		57-1545 [1]	7.6 @ 5132
Grand Cherokee	4.7L V8 F/I	77-1548KP [1]	7.7 @ 4397
		57-1548 [1]	9.5 @ 4397
Grand Cherokee	5.7L V8 F/I	77-1549KP [1]	12.9 @ 5046
		57-1549 [1]	15.3 @ 5046
Grand Cherokee	6.1L V8 F/I	63-1555 [2]	12.0 @ 5000
		57-1555 [1]	12.0 @ 5000
Grand Cherokee III	5.7L V8 F/I	57-1549 [2]	15.3 @ 5046
Liberty	3.7L V6 F/I	77-1540KP [1]	5.9 @ 4054
		57-1540 [1]	6.4 @ 5274
Patriot	2.4L L4 F/I	57-1552 [1]	7.9 @ 4557
Wrangler	3.8L V6 F/I	77-1553KP [1]	7.9 @ 4807
		57-1553 [1]	8.2 @ 4807
2006 JEEP			
Commander	3.7L V6 F/I	77-1545KP [1]	6.9 @ 5184
		57-1545 [1]	7.6 @ 5132
Commander	4.7L V8 F/I	77-1548KP [1]	7.7 @ 4397
		57-1548 [1]	9.5 @ 4397
Commander	5.7L V8 F/I	77-1549KP [1]	12.9 @ 5046
		57-1549 [1]	15.3 @ 5046
Grand Cherokee	3.7L V6 F/I	77-1545KP [1]	6.9 @ 5184
		57-1545 [1]	7.6 @ 5132
Grand Cherokee	4.7L V8 F/I	77-1548KP [1]	7.7 @ 4397

1) Street legal in all US states. 2) Street legal in most states, but not legal for use in California or other states with similar emission control regulations.
* Estimated horsepower gains are based on specific or similar vehicle dyno tests. Results will vary. See Page 479 for more information.
Partial Listing - Complete List of Vehicles and Applications at knfilters.com. See page 5 for information on intake tube materials/colors.

AIR INTAKE SYSTEMS

Vehicle	Engine Type	Intake Kit	Estimated Horsepower*
2006 JEEP			
Grand Cherokee	4.7L V8 F/I	57-1548 [1]	9.5 @ 4397
Grand Cherokee	5.7L V8 F/I	77-1549KP [1]	12.9 @ 5046
		57-1549 [1]	15.3 @ 5046
Grand Cherokee	6.1L V8 F/I	63-1555 [2]	12.0 @ 5000
		57-1555 [1]	12.0 @ 5000
Grand Cherokee III	5.7L V8 F/I	57-1549 [2]	15.3 @ 5046
Liberty	3.7L V6 F/I	77-1540KP [1]	5.9 @ 4054
		57-1540 [1]	6.4 @ 5274
TJ	4.0L L6 F/I	57-1514-1 [1]	12.1 @ 4623
Wrangler	4.0L L6 F/I	57-1514-1 [1]	12.1 @ 4623
2005 JEEP			
Grand Cherokee	3.7L V6 F/I	77-1545KP [1]	6.9 @ 5184
		57-1545 [1]	7.6 @ 5132
Grand Cherokee	4.7L V8 F/I	77-1548KP [1]	7.7 @ 4397
		57-1548 [1]	9.5 @ 4997
Grand Cherokee	5.7L V8 F/I	77-1549KP [1]	12.9 @ 5046
		57-1549 [1]	15.3 @ 5046
Grand Cherokee III	5.7L V8 F/I	57-1549 [2]	15.3 @ 5046
Liberty	3.7L V6 F/I	77-1540KP [1]	5.9 @ 4054
		57-1540 [1]	6.4 @ 5274
TJ	4.0L L6 F/I	57-1514-1 [1]	12.1 @ 4623
Wrangler	4.0L L6 F/I	57-1514-1 [1]	12.1 @ 4623
2004 JEEP			
Grand Cherokee	4.0L L6 F/I	77-1526KP [1]	6.7 @ 4492
		57-1526 [1]	7.7 @ 4711
Grand Cherokee	4.7L V8 F/I	77-1513KP [1]	9.2 @ 4680
		57-1513-1 [1]	13.1 @ 4765
Liberty	3.7L V6 F/I	77-1540KP [1]	5.9 @ 4054
		57-1540 [1]	6.4 @ 5274
TJ	4.0L L6 F/I	57-1514-1 [1]	12.1 @ 4623
Wrangler	4.0L L6 F/I	57-1514-1 [1]	12.1 @ 4623
2003 JEEP			
Grand Cherokee	4.0L L6 F/I	77-1526KP [1]	6.7 @ 4492
		57-1526 [1]	7.7 @ 4711
Grand Cherokee	4.7L V8 F/I	77-1513KP [1]	9.2 @ 4680
		57-1513-1 [1]	13.1 @ 4765
Liberty	3.7L V6 F/I	57-1528 [1]	8.5 @ 5047
TJ	4.0L L6 F/I	57-1514-1 [1]	12.1 @ 4623
Wrangler	4.0L L6 F/I	57-1514-1 [1]	12.1 @ 4623
2002 JEEP			
Grand Cherokee	4.0L L6 F/I	77-1526KP [1]	6.7 @ 4492
		57-1526 [1]	7.7 @ 4711
Grand Cherokee	4.7L V8 F/I	77-1513KP [1]	9.2 @ 4680
		57-1513-1 [1]	13.1 @ 4765
Liberty	3.7L V6 F/I	57-1528 [1]	8.5 @ 5047
TJ	4.0L L6 F/I	57-1514-1 [1]	12.1 @ 4623
Wrangler	4.0L L6 F/I	57-1514-1 [1]	12.1 @ 4623
2001 JEEP			
Cherokee	4.0L L6 F/I	57-1518 [1]	7.9 @ 4511
Grand Cherokee	4.0L L6 F/I	77-1526KP [1]	6.7 @ 4492
		57-1526 [1]	7.7 @ 4711
Grand Cherokee	4.7L V8 F/I	77-1513KP [1]	9.2 @ 4680
		57-1513-1 [1]	13.1 @ 4765
TJ	4.0L L6 F/I	57-1514-1 [1]	12.1 @ 4623
Wrangler	4.0L L6 F/I	57-1514-1 [1]	12.1 @ 4623
2000 JEEP			
Cherokee	4.0L L6 F/I	57-1518 [1]	7.9 @ 4511
Grand Cherokee	4.0L L6 F/I	77-1526KP [1]	6.7 @ 4492
		57-1526 [1]	7.7 @ 4711
Grand Cherokee	4.7L V8 F/I	77-1513KP [1]	9.2 @ 4680
		57-1513-1 [1]	13.1 @ 4765
TJ	4.0L L6 F/I	57-1514-1 [1]	12.1 @ 4623
Wrangler	4.0L L6 F/I	57-1514-1 [1]	12.1 @ 4623
1999 JEEP			
Cherokee	4.0L L6 F/I	57-1518 [1]	7.9 @ 4511
Grand Cherokee	4.0L L6 F/I	77-1526KP [1]	6.7 @ 4492
		57-1526 [1]	7.7 @ 4711
Grand Cherokee	4.7L V8 F/I	77-1513KP [1]	9.2 @ 4680
		57-1513-1 [1]	13.1 @ 4765
TJ	4.0L L6 F/I	57-1514-1 [1]	12.1 @ 4623
Wrangler	4.0L L6 F/I	57-1514-1 [1]	12.1 @ 4623
1998 JEEP			
Cherokee	4.0L L6 F/I	57-1518 [1]	7.9 @ 4511
Grand Cherokee	4.0L L6 F/I	57-1520 [1]	7.7 @ 4684
Grand Cherokee	5.2L V8 F/I	57-1506-2 [1]	24.7 @ 4335
Grand Cherokee	5.9L V8 F/I	57-1506-2 [1]	24.7 @ 4335
TJ	4.0L L6 F/I	57-1514-1 [1]	12.1 @ 4623
Wrangler	4.0L L6 F/I	57-1514-1 [1]	12.1 @ 4623
1997 JEEP			
Cherokee	4.0L L6 F/I	57-1518 [1]	7.9 @ 4511
Grand Cherokee	4.0L L6 F/I	57-1520 [1]	7.7 @ 4984
Grand Cherokee	5.2L V8 F/I	57-1506-2 [1]	24.7 @ 4335
TJ	4.0L L6 F/I	57-1514-1 [1]	12.1 @ 4623
Wrangler	4.0L L6 F/I	57-1514-1 [1]	12.1 @ 4623
1996 JEEP			
Cherokee	4.0L L6 F/I	57-1518 [1]	7.9 @ 4511
Grand Cherokee	4.0L L6 F/I	57-1520 [1]	7.7 @ 4684
Grand Cherokee	5.2L V8 F/I	57-1506-2 [1]	24.7 @ 4335
1995 JEEP			
Cherokee	4.0L L6 F/I	57-1519 [1]	7.1 @ 4548
Grand Cherokee	4.0L L6 F/I	57-1520 [1]	7.7 @ 4684
Grand Cherokee	5.2L V8 F/I	57-1506-2 [1]	24.7 @ 4335
Wrangler	4.0L L6 F/I - exc. ABS	57-1521 [1]	12.7 @ 4800
1994 JEEP			
Cherokee	4.0L L6 F/I	57-1519 [1]	7.1 @ 4548
Grand Cherokee	4.0L L6 F/I	57-1520 [1]	7.7 @ 4684
Grand Cherokee	5.2L V8 F/I	57-1506-2 [1]	24.7 @ 4335
Wrangler	4.0L L6 F/I - exc. ABS	57-1521 [1]	12.7 @ 4800
1993 JEEP			
Cherokee	4.0L L6 F/I	57-1519 [1]	7.1 @ 4548
Grand Cherokee	4.0L L6 F/I	57-1520 [1]	7.7 @ 4684
Grand Cherokee	5.2L V8 F/I	57-1506-2 [1]	24.7 @ 4335
Wrangler	4.0L L6 F/I - exc. ABS	57-1521 [1]	12.7 @ 4800
1992 JEEP			
Cherokee	4.0L L6 F/I	57-1519 [1]	7.1 @ 4548
Wrangler	4.0L L6 F/I - exc. ABS	57-1521 [1]	12.7 @ 4800
1991 JEEP			
Cherokee	4.0L L6 F/I	57-1519 [1]	7.1 @ 4548
Wrangler	4.0L L6 F/I - exc. ABS	57-1521 [1]	12.7 @ 4800
2009 KAWASAKI			
KFX450R	449	63-1124 [2]	4.7 @ 7100

1) Street legal in all US states. 2) Street legal in most states, but not legal for use in California or other states with similar emission control regulations.
* Estimated horsepower gains are based on specific or similar vehicle dyno tests. Results will vary. See Page 479 for more information.
Partial Listing - Complete List of Vehicles and Applications at knfilters.com. See page 5 for information on intake tube materials/colors.

Vehicle	Engine Type	Intake Kit	Estimated Horsepower*
2008 KAWASAKI			
KFX450R	449	63-1124 [2]	3.4 @ 7100
2013 KIA			
Forte	2.0L L4 F/I	69-5307TTK [2]	7.5 @ 5501
Forte Koup	2.4L L4 F/I	69-5307TTK [2]	7.5 @ 5501
Optima	2.0L L4 F/I	69-5309TS [2]	7.6 @ 4861
2012 KIA			
Forte	2.0L L4 F/I	69-5307TTK [2]	7.5 @ 5501
Forte Koup	2.4L L4 F/I	69-5307TTK [2]	7.5 @ 5501
Optima	2.0L L4 F/I	69-5309TS [2]	7.6 @ 4861
Soul	2.0L L4 F/I	69-5308TS [2]	5.1 @ 5664
2011 KIA			
Forte	2.0L L4 F/I	69-5307TTK [2]	7.5 @ 5501
Forte Koup	2.4L L4 F/I	69-5307TTK [2]	7.5 @ 5501
Optima	2.0L L4 F/I	69-5309TS [2]	7.6 @ 4861
Soul	2.0L L4 F/I	69-5306TS [2]	5.1 @ 5300
2010 KIA			
Forte	2.0L L4 F/I	69-5307TTK [2]	7.5 @ 5501
Forte Koup	2.4L L4 F/I	69-5307TTK [2]	7.5 @ 5501
Soul	2.0L L4 F/I	69-5306TS [2]	5.1 @ 5300
2008 KIA			
Spectra	2.0L L4 F/I	69-5305TP [2]	7.2 @ 5800
2007 KIA			
Spectra	2.0L L4 F/I	69-5305TP [2]	7.2 @ 5800
2006 KIA			
Spectra	2.0L L4 F/I	69-5305TP [2]	7.2 @ 5800
Spectra5	2.0L L4 F/I	69-5305TP [2]	7.2 @ 5800
2005 KIA			
Spectra	2.0L L4 F/I	69-5305TP [2]	7.2 @ 5800
Spectra5	2.0L L4 F/I	69-5305TP [2]	7.3 @ 5800
2012 LEXUS			
IS F	5.0L V8 F/I	69-8703TS [2]	22.5 @ 6145
IS250	2.5L V6 F/I	69-8701TP [2]	12.1 @ 5852
2011 LEXUS			
GS350	3.5L V6 F/I	69-8702TP [2]	18.1 @ 5751
IS F	5.0L V8 F/I	69-8703TS [2]	22.5 @ 6145
IS250	2.5L V6 F/I	69-8701TP [2]	12.1 @ 5852
IS350	3.5L V6 F/I	69-8701TP [2]	12.1 @ 5852
2010 LEXUS			
GS350	3.5L V6 F/I	69-8702TP [2]	18.1 @ 5751
IS F	5.0L V8 F/I	69-8703TS [2]	22.5 @ 6145
IS250	2.5L V6 F/I	69-8701TP [2]	12.1 @ 5852
IS350	3.5L V6 F/I	69-8701TP [2]	12.1 @ 5852
2009 LEXUS			
GS350	3.5L V6 F/I	69-8702TP [2]	18.1 @ 5751
IS F	5.0L V8 F/I	69-8703TS [2]	22.5 @ 6145
IS250	2.5L V6 F/I	69-8701TP [2]	12.1 @ 5852
IS350	3.5L V6 F/I	69-8701TP [2]	12.1 @ 5852
2008 LEXUS			
GS350	3.5L V6 F/I	69-8702TP [2]	18.1 @ 5751
IS F	5.0L V8 F/I	69-8703TS [2]	28.2 @ 5900
IS250	2.5L V6 F/I	69-8701TP [2]	12.1 @ 5852
IS350	3.5L V6 F/I	69-8701TP [2]	12.1 @ 5852
2007 LEXUS			
GS350	3.5L V6 F/I	69-8702TP [2]	18.1 @ 5751
IS250	2.5L V6 F/I	69-8701TP [2]	12.1 @ 5852
IS350	3.5L V6 F/I	69-8701TP [2]	12.1 @ 5852
2006 LEXUS			
IS250	2.5L V6 F/I	69-8701TP [2]	12.1 @ 5852
IS350	3.5L V6 F/I	69-8701TP [2]	12.1 @ 5852
2005 LEXUS			
IS250	2.5L V6 F/I	69-8701TP [2]	12.1 @ 5852
IS300	3.0L L6 F/I	69-8700TP [1]	9.4 @ 5850
		57-9018 [1]	9.5 @ 5726
2004 LEXUS			
IS300	3.0L L6 F/I	69-8700TP [1]	9.4 @ 5850
		57-9018 [1]	9.5 @ 5726
2003 LEXUS			
IS300	3.0L L6 F/I	69-8700TP [1]	9.4 @ 5850
		57-9018 [1]	9.5 @ 5726
2002 LEXUS			
IS300	3.0L L6 F/I	69-8700TP [1]	9.4 @ 5850
		57-9018 [1]	9.5 @ 5726
2001 LEXUS			
IS300	3.0L L6 F/I	69-8700TP [1]	9.4 @ 5850
		57-9018 [1]	9.5 @ 5726
2000 LEXUS			
GS400	4.0L V8 F/I	57-9011 [1]	9.3 @ 5978
1999 LEXUS			
GS400	4.0L V8 F/I	57-9011 [1]	9.3 @ 5978
1998 LEXUS			
GS400	4.0L V8 F/I	57-9011 [1]	9.3 @ 5978
2012 LINCOLN			
Navigator	5.4L V8 F/I	63-2575 [2]	11.0 @ 4600
2011 LINCOLN			
Navigator	5.4L V8 F/I	63-2575 [2]	11.0 @ 4600
2010 LINCOLN			
Navigator	5.4L V8 F/I	63-2575 [2]	11.0 @ 4600
		57-2575 [1]	11.0 @ 4600
2009 LINCOLN			
Navigator	5.4L V8 F/I	63-2575 [2]	11.0 @ 4600
		57-2575 [1]	11.0 @ 4600
2008 LINCOLN			
Mark LT	5.4L V8 F/I	77-2556KP [1]	9.6 @ 3724
		57-2556 [1]	15.5 @ 3829
Navigator	5.4L V8 F/I	63-2575 [2]	11.0 @ 4600
		57-2575 [1]	11.0 @ 4600
2007 LINCOLN			
Mark LT	5.4L V8 F/I	77-2556KP [1]	9.6 @ 3724
		57-2556 [1]	15.5 @ 3829
Navigator	5.4L V8 F/I	63-2575 [2]	11.0 @ 4600
		57-2575 [1]	11.0 @ 4600
2006 LINCOLN			
Mark LT	5.4L V8 F/I	77-2556KP [1]	9.6 @ 3724
		57-2556 [1]	15.5 @ 3829

1) Street legal in all US states. 2) Street legal in most states, but not legal for use in California or other states with similar emission control regulations.
* Estimated horsepower gains are based on specific or similar vehicle dyno tests. Results will vary. See Page 479 for more information.
Partial Listing - Complete List of Vehicles and Applications at knfilters.com. See page 5 for information on intake tube materials/colors.

Vehicle	Engine Type	Intake Kit	Estimated Horsepower*
2004 LINCOLN			
Navigator	5.4L V8 F/I	57-2551 [1]	15.5 @ 5049
2003 LINCOLN			
Navigator	5.4L V8 F/I	57-2551 [1]	15.5 @ 5049
2002 LINCOLN			
Navigator	5.4L V8 F/I	57-2558 [1]	15.1 @ 4649
2001 LINCOLN			
Navigator	5.4L V8 F/I	57-2558 [1]	15.1 @ 4649
2000 LINCOLN			
Navigator	5.4L V8 F/I	57-2558 [1]	15.1 @ 4649
1999 LINCOLN			
Navigator	5.4L V8 F/I - SOHC	77-2514KP [1]	9.7 @ 4093
		57-2541 [1]	13.1 @ 4562
		57-2514-4 [1]	9.8 @ 4198
1998 LINCOLN			
Navigator	5.4L V8 F/I	77-2514KP [1]	9.7 @ 4093
		57-2541 [1]	13.1 @ 4562
		57-2514-4 [1]	9.8 @ 4198
2013 MAZDA			
6	2.5L L4 F/I	69-6028TTK [2]	5.6 @ 5100
Mazdaspeed3	2.3L L4 F/I	69-6012TS [2]	24.2 @ 5000
2012 MAZDA			
3	2.5L L4 F/I	69-6013TTK [2]	6.7 @ 5604
6	2.5L L4 F/I	69-6028TTK [2]	5.6 @ 5100
Mazdaspeed3	2.3L L4 F/I	69-6012TS [2]	24.2 @ 5000
2011 MAZDA			
3	2.5L L4 F/I	69-6013TTK [2]	6.7 @ 5604
6	2.5L L4 F/I	69-6028TTK [2]	5.6 @ 5100
Mazdaspeed3	2.3L L4 F/I	69-6012TS [2]	24.2 @ 5000
RX-8	1.3L R2 F/I	69-6030-1TFK [2]	11.2 @ 8660
2010 MAZDA			
3	2.5L L4 F/I	69-6013TTK [2]	6.7 @ 5604
6	2.5L L4 F/I	69-6028TTK [2]	5.6 @ 5100
Mazdaspeed3	2.3L L4 F/I	69-6012TS [2]	24.2 @ 5000
RX-8	1.3L R2 F/I	69-6030-1TFK [2]	11.2 @ 8660
2009 MAZDA			
3	2.0L L4 F/I	69-6010TS [2]	5.7 @ 4764
		69-6010TR [2]	5.7 @ 4764
3	2.3L L4 F/I - exc. Turbo	69-6010TS [2]	5.7 @ 4764
		69-6010TR [2]	5.7 @ 4764
6	2.5L L4 F/I	69-6028TTK [2]	5.6 @ 5100
B4000	4.0L V6 F/I	77-2561KP [2]	11.2 @ 4950
		63-1108 [2]	13.5 @ 5129
Mazdaspeed3	2.3L L4 F/I	69-6011TS [1]	25.7 @ 4300
RX-8	1.3L R2 F/I	69-6030-1TFK [1]	11.2 @ 8660
2008 MAZDA			
3	2.0L L4 F/I	69-6010TS [2]	5.7 @ 4764
		69-6010TR [2]	5.7 @ 4764
3	2.3L L4 F/I	69-6010TS [2]	5.7 @ 4764
		69-6010TR [2]	5.7 @ 4764
5 Van	2.3L L4 F/I	69-6010TS [1]	5.7 @ 4764
6	2.3L L4 F/I - Not CARB exempt for LEV II SULEV Vehicles	69-6027TTK [1]	11.9 @ 5400
B4000	4.0L V6 F/I	77-2561KP [2]	11.2 @ 4950
		63-1108 [2]	13.5 @ 5129
2008 MAZDA			
Mazdaspeed3	2.3L L4 F/I	69-6011TS [1]	25.7 @ 4300
RX-8	1.3L R2 F/I	69-6030-1TFK [1]	11.2 @ 8660
2007 MAZDA			
3	2.0L L4 F/I	69-6010TS [2]	5.7 @ 4764
		69-6010TR [2]	5.7 @ 4764
3	2.3L L4 F/I	69-6010TS [2]	5.7 @ 4764
		69-6010TR [2]	5.7 @ 4764
5 Van	2.3L L4 F/I	69-6010TS [1]	5.7 @ 4764
		69-6010TR [1]	5.7 @ 4764
6	2.3L L4 F/I - Not CARB exempt for LEV II SULEV Vehicles	69-6027TTK [1]	11.9 @ 5400
6	3.0L V6 F/I	69-6026TS [1]	6.6 @ 4700
B4000	4.0L V6 F/I	77-2561KP [1]	11.2 @ 4950
		57-2561 [1]	13.5 @ 5129
Mazdaspeed3	2.3L L4 F/I	69-6011TS [1]	25.7 @ 4300
RX-8	1.3L R2 F/I	69-6030-1TFK [1]	11.2 @ 8660
2006 MAZDA			
3	2.0L L4 F/I	69-6010TS [2]	5.7 @ 4764
		69-6010TR [2]	5.7 @ 4764
3	2.3L L4 F/I	69-6010TS [2]	5.7 @ 4764
		69-6010TR [2]	5.7 @ 4764
5 Van	2.3L L4 F/I	69-6010TS [1]	5.7 @ 4764
		69-6010TR [1]	5.7 @ 4764
6	2.3L L4 F/I - US, Not CARB exempt for LEV II SULEV Vehicles	69-6025TS [1]	6.2 @ 5051
6	3.0L V6 F/I	69-6026TS [1]	6.6 @ 4700
B4000	4.0L V6 F/I	57-2561 [1]	13.5 @ 5129
RX-8	1.3L R2 F/I	69-6030-1TFK [1]	11.2 @ 8660
2005 MAZDA			
3	2.0L L4 F/I	69-6010TS [2]	5.7 @ 4764
		69-6010TR [2]	5.7 @ 4764
3	2.3L L4 F/I	69-6010TS [2]	5.7 @ 4764
		69-6010TR [2]	5.7 @ 4764
6	2.3L L4 F/I - US, Not CARB exempt for LEV II SULEV Vehicles	69-6025TS [1]	6.2 @ 5051
6	3.0L V6 F/I	69-6026TS [1]	6.6 @ 4700
B4000	4.0L V6 F/I	77-2561KP [1]	11.2 @ 4950
		57-2561 [1]	13.5 @ 5129
Miata	1.8L L4 F/I	69-6000TR [1]	3.6 @ 6499
		69-6000TP [1]	3.6 @ 6499
MX-5 II	1.8L L4 F/I	69-6000TP [2]	3.6 @ 6499
RX-8	1.3L R2 F/I	69-6030-1TFK [1]	11.2 @ 8660
2004 MAZDA			
3	2.0L L4 F/I - Non-US	69-6010TS [2]	5.7 @ 4764
		69-6010TR [2]	5.7 @ 4764
3	2.3L L4 F/I	69-6010TS [1]	5.7 @ 4764
		69-6010TR [1]	5.7 @ 4764
6	2.3L L4 F/I - US, Not CARB exempt for LEV II SULEV Vehicles	69-6025TS [1]	6.2 @ 5051
6	3.0L V6 F/I	69-6026TS [1]	6.6 @ 4700
B3000	3.0L V6 F/I	57-2560 [1]	10.0 @ 4921
B4000	4.0L V6 F/I	77-2561KP [1]	11.2 @ 4950
		57-2561 [1]	13.5 @ 5129
Miata	1.8L L4 F/I	69-6000TR [1]	3.6 @ 6499
		69-6000TP [1]	3.6 @ 6499
MX-5 II	1.8L L4 F/I	69-6000TP [2]	3.6 @ 6499

1) Street legal in all US states. 2) Street legal in most states, but not legal for use in California or other states with similar emission control regulations.
* Estimated horsepower gains are based on specific or similar vehicle dyno tests. Results will vary. See Page 479 for more information.
Partial Listing - Complete List of Vehicles and Applications at knfilters.com. See page 5 for information on intake tube materials/colors.

Vehicle	Engine Type	Intake Kit	Estimated Horsepower*
2004 MAZDA			
RX-8	1.3L R2 F/I	69-6030-1TFK [1]	11.2 @ 8660
2003 MAZDA			
3	2.0L L4 F/I	69-6010TS [2]	5.7 @ 4764
		69-6010TR [2]	5.7 @ 4764
6	2.3L L4 F/I - US, Not CARB exempt for LEV II SULEV Vehicles	69-6025TS [1]	6.2 @ 5051
6	3.0L V6 F/I	69-6026TS [1]	6.6 @ 4700
B2300	2.3L L4 F/I	77-2552KP [1]	6.1 @ 4498
		57-2552 [1]	6.8 @ 4874
B3000	3.0L V6 F/I	57-2554 [1]	9.4 @ 4848
B4000	4.0L V6 F/I	77-2529KP [1]	5.3 @ 5095
		57-2529-1 [1]	6.9 @ 5244
Miata	1.8L L4 F/I	69-6000TR [1]	3.6 @ 6499
		69-6000TP [1]	3.6 @ 6499
MX-5 II	1.8L L4 F/I	69-6000TR [2]	3.6 @ 6499
		69-6000TP [2]	3.6 @ 6499
Protege	2.0L L4 F/I	69-6020TS [1]	5.0 @ 3568
		69-6020TR [1]	5.0 @ 3568
Protege5	2.0L L4 F/I	69-6020TS [1]	5.0 @ 3568
		69-6020TR [1]	5.0 @ 3568
RX-8	1.3L R2 F/I	69-6030-1TFK [1]	11.2 @ 8660
2002 MAZDA			
B2300	2.3L L4 F/I	77-2552KP [1]	6.1 @ 4498
		57-2552 [1]	6.8 @ 4874
B3000	3.0L V6 F/I	57-2554 [1]	9.4 @ 4848
B4000	4.0L V6 F/I	77-2529KP [1]	5.3 @ 5095
		57-2529-1 [1]	6.9 @ 5244
Miata	1.8L L4 F/I	69-6000TR [1]	3.6 @ 6499
		69-6000TP [1]	3.6 @ 6499
MX-5 II	1.8L L4 F/I	69-6000TR [2]	3.6 @ 6499
		69-6000TP [2]	3.6 @ 6499
Protege	2.0L L4 F/I	69-6020TS [1]	5.0 @ 3568
		69-6020TR [1]	5.0 @ 3568
Protege5	2.0L L4 F/I	69-6020TS [1]	5.0 @ 3568
		69-6020TR [1]	5.0 @ 3568
2001 MAZDA			
B3000	3.0L V6 F/I	57-2533 [1]	5.6 @ 4721
B4000	4.0L V6 F/I	57-2529-1 [1]	6.9 @ 5244
Miata	1.8L L4 F/I	69-6000TR [1]	3.6 @ 6499
		69-6000TP [1]	3.6 @ 6499
MX-5 II	1.8L L4 F/I	69-6000TR [2]	3.6 @ 6499
		69-6000TP [2]	3.6 @ 6499
2000 MAZDA			
B2500	2.5L L4 F/I	57-2540 [1]	6.6 @ 5000
B3000	3.0L V6 F/I	57-2533 [1]	5.6 @ 4721
B4000	4.0L V6 F/I	57-2527 [1]	3.2 @ 3969
Miata	1.8L L4 F/I	69-6000TR [1]	3.6 @ 6499
		69-6000TP [1]	3.6 @ 6499
MX-5 II	1.8L L4 F/I	69-6000TR [2]	3.6 @ 6499
		69-6000TP [2]	3.6 @ 6499
1999 MAZDA			
B2500	2.5L L4 F/I	57-2540 [1]	6.6 @ 5000
B3000	3.0L V6 F/I	57-2533 [1]	5.6 @ 4721
B4000	4.0L V6 F/I	57-2527 [1]	3.2 @ 3969
Miata	1.8L L4 F/I	69-6000TR [1]	3.6 @ 6499
		69-6000TP [1]	3.6 @ 6499
1999 MAZDA			
MX-5 II	1.8L L4 F/I	69-6000TR [2]	3.6 @ 6499
		69-6000TP [2]	3.6 @ 6499
1998 MAZDA			
B2500	2.5L L4 F/I	57-2540 [1]	6.6 @ 5000
B3000	3.0L V6 F/I	57-2533 [1]	5.6 @ 4721
B4000	4.0L V6 F/I	57-2527 [1]	3.2 @ 3969
Miata	1.8L L4 F/I	69-6000TR [2]	3.6 @ 6499
		69-6000TP [2]	3.6 @ 6499
1997 MAZDA			
B2300	2.3L L4 F/I - Manual Trans.	57-2535 [1]	6.1 @ 5200
B4000	4.0L V6 F/I	57-2527 [1]	3.2 @ 3969
1996 MAZDA			
B2300	2.3L L4 F/I - Manual Trans.	57-2535 [1]	6.1 @ 5200
MX-6	2.5L V6 F/I	57-2507 [1]	
1995 MAZDA			
B2300	2.3L L4 F/I - Manual Trans.	57-2535 [1]	6.1 @ 5200
MX-6	2.5L V6 F/I	57-2507 [1]	
1994 MAZDA			
MX-6	2.5L V6 F/I	57-2507 [1]	
1993 MAZDA			
Miata	1.6L L4 F/I	57-5001 [1]	4.1 @ 5828
MX-6	2.5L V6 F/I	57-2507 [1]	
1992 MAZDA			
Miata	1.6L L4 F/I	57-5001 [1]	4.1 @ 5828
1991 MAZDA			
Miata	1.6L L4 F/I	57-5001 [1]	4.1 @ 5828
1990 MAZDA			
Miata	1.6L L4 F/I	57-5001 [1]	4.1 @ 5828
1988 MAZDA			
RX-7	1.3L R2 F/I - exc. Turbo	57-5005 [1]	
1987 MAZDA			
RX-7	1.3L R2 F/I - exc. Turbo	57-5005 [1]	
1986 MAZDA			
RX-7	1.3L R2 F/I - exc. Turbo	57-5005 [1]	
2011 MERCURY			
Grand Marquis	4.6L V8 F/I	69-3532TTK [2]	10.2 @ 4491
2010 MERCURY			
Grand Marquis	4.6L V8 F/I	69-3532TTK [2]	10.2 @ 4491
2009 MERCURY			
Grand Marquis	4.6L V8 F/I	69-3532TTK [2]	10.2 @ 4491
2008 MERCURY			
Grand Marquis	4.6L V8 F/I	69-3532TTK [2]	10.2 @ 4491
2007 MERCURY			
Grand Marquis	4.6L V8 F/I	69-3532TTK [2]	10.2 @ 4491
2006 MERCURY			
Grand Marquis	4.6L V8 F/I	69-3532TTK [2]	10.2 @ 4491
2005 MERCURY			
Grand Marquis	4.6L V8 F/I	69-3532TTK [2]	10.2 @ 4491

1) Street legal in all US states. 2) Street legal in most states, but not legal for use in California or other states with similar emission control regulations.
* Estimated horsepower gains are based on specific or similar vehicle dyno tests. Results will vary. See Page 479 for more information.
Partial Listing - Complete List of Vehicles and Applications at knfilters.com. See page 5 for information on intake tube materials/colors.

Vehicle	Engine Type	Intake Kit	Estimated Horsepower*
2005 MERCURY			
Mountaineer	4.6L V8 F/I	57-2564 [1]	10.4 @ 4921
2004 MERCURY			
Grand Marquis	4.6L V8 F/I	69-3532TTK [2]	10.2 @ 4491
Marauder	4.6L V8 F/I	57-2563 [1]	17.3 @ 5675
Mountaineer	4.6L V8 F/I	57-2564 [1]	10.4 @ 4921
2003 MERCURY			
Marauder	4.6L V8 F/I	57-2563 [1]	17.3 @ 5675
Mountaineer	4.0L V6 F/I	57-2537 [1]	7.3 @ 4890
Mountaineer	4.6L V8 F/I	57-2539 [1]	8.6 @ 4486
2002 MERCURY			
Mountaineer	4.0L V6 F/I	57-2537 [1]	7.3 @ 4890
Mountaineer	4.6L V8 F/I	57-2539 [1]	8.6 @ 4486
2001 MERCURY			
Cougar	2.5L V6 F/I	57-2534 [1]	8.9 @ 6189
2000 MERCURY			
Cougar	2.5L V6 F/I	57-2534 [1]	8.9 @ 6189
1997 MERCURY			
Cougar	3.8L V6 F/I	57-2505-1 [1]	4.7 @ 3418
Cougar	4.6L V8 F/I	57-2505-1 [1]	4.7 @ 3418
Mountaineer	5.0L V8 F/I - w/Round Filter	57-2513-1 [1]	
1996 MERCURY			
Cougar	3.8L V6 F/I	57-2505-1 [1]	4.7 @ 3418
Cougar	4.6L V8 F/I	57-2505-1 [1]	4.7 @ 3418
1995 MERCURY			
Cougar	4.6L V8 F/I	57-2505-1 [1]	4.7 @ 3418
1994 MERCURY			
Cougar	4.6L V8 F/I	57-2505-1 [1]	4.7 @ 3418
2011 MINI			
Cooper	1.6L L4 F/I - US	69-2005TTK [2]	4.1 @ 5300
2010 MINI			
Cooper	1.6L L4 F/I - Non-US, Manual Trans.	69-2022TS [2]	
Cooper	1.6L L4 F/I - US	69-2005TTK [2]	4.1 @ 5300
Cooper Clubman	1.6L L4 F/I - Manual Trans.	69-2022TS [2]	
Cooper S	1.6L L4 F/I - US	69-2004TTK [2]	11.2 @ 4700
2009 MINI			
Cooper	1.6L L4 F/I - Manual Trans.	69-2022TS [2]	
Cooper	1.6L L4 F/I - US	69-2005TTK [2]	4.1 @ 5300
Cooper Clubman	1.6L L4 F/I - Manual Trans.	69-2022TS [2]	
Cooper Clubman	1.6L L4 F/I - US	69-2005TTK [2]	4.1 @ 5300
Cooper S	1.6L L4 F/I - US	69-2004TTK [1]	11.2 @ 4700
2008 MINI			
Cooper	1.6L L4 F/I - Non-US, Coupe, Manual Trans.	69-2022TS [2]	
Cooper	1.6L L4 F/I - US	69-2005TTK [2]	4.1 @ 5300
Cooper Clubman	1.6L L4 F/I - US	69-2005TTK [2]	4.1 @ 5300
Cooper S	1.6L L4 F/I - US	69-2004TTK [1]	11.2 @ 4700
2007 MINI			
Cooper	1.6L L4 F/I - Non-US, Coupe, Manual Trans.	69-2022TS [2]	
Cooper	1.6L L4 F/I - US	69-2005TTK [2]	4.1 @ 5300
Cooper S	1.6L L4 F/I - Convertible	69-2021TP [2]	4.1 @ 5997
2007 MINI			
Cooper S	1.6L L4 F/I - US, Coupe	69-2004TTK [1]	11.2 @ 4700
2006 MINI			
Cooper	1.6L L4 F/I	69-2020TR [1]	4.3 @ 5950
		69-2020TP [1]	4.3 @ 5950
Cooper S	1.6L L4 F/I - Manual Trans.	69-2021TP [2]	4.1 @ 5997
Works	1.6L L4 F/I	69-2021TP [2]	4.1 @ 5997
2005 MINI			
Cooper	1.6L L4 F/I	69-2020TR [1]	4.3 @ 5950
		69-2020TP [1]	4.3 @ 5950
Cooper S	1.6L L4 F/I	69-2021TP [2]	4.1 @ 5997
Works	1.6L L4 F/I	69-2021TP [2]	4.1 @ 5997
2004 MINI			
Cooper	1.6L L4 F/I	69-2020TR [1]	4.3 @ 5950
		69-2020TP [1]	4.3 @ 5950
Cooper S	1.6L L4 F/I	69-2021TP [1]	4.1 @ 5997
Works	1.6L L4 F/I	69-2021TP [2]	4.1 @ 5997
2003 MINI			
Cooper	1.6L L4 F/I	69-2020TR [1]	4.3 @ 5950
		69-2020TP [1]	4.3 @ 5950
Cooper S	1.6L L4 F/I	69-2021TP [1]	4.1 @ 5997
2002 MINI			
Cooper	1.6L L4 F/I	69-2020TR [1]	4.3 @ 5950
		69-2020TP [1]	4.3 @ 5950
Cooper S	1.6L L4 F/I	69-2021TP [1]	4.1 @ 5997
2013 MITSUBISHI			
Lancer Evolution	2.0L L4 F/I	69-6546TWR [2]	21.4 @ 6100
2012 MITSUBISHI			
Lancer	2.4L L4 F/I	69-6544TS [2]	6.7 @ 5100
Lancer Evolution	2.0L L4 F/I	69-6546TWR [2]	21.4 @ 6100
2011 MITSUBISHI			
Eclipse	3.8L V6 F/I	69-6502TR [2]	13.1 @ 5400
Lancer	2.4L L4 F/I	69-6544TS [2]	6.7 @ 5100
Lancer Evolution	2.0L L4 F/I	69-6546TWR [2]	21.4 @ 6100
2010 MITSUBISHI			
Eclipse	3.8L V6 F/I	69-6502TR [2]	13.1 @ 5400
Lancer	2.4L L4 F/I	69-6544TS [2]	6.7 @ 5100
Lancer Evolution	2.0L L4 F/I	69-6546TWR [2]	21.4 @ 6100
2009 MITSUBISHI			
Eclipse	3.8L V6 F/I	69-6502TR [2]	13.1 @ 5400
Lancer	2.0L L4 F/I	69-6544TS [1]	6.7 @ 5100
Lancer	2.4L L4 F/I	69-6544TS [1]	6.7 @ 5100
Lancer Evolution	2.0L L4 F/I	69-6546TWR [2]	21.4 @ 6100
2008 MITSUBISHI			
Eclipse	3.8L V6 F/I	69-6502TR [2]	13.1 @ 5400
Lancer	2.0L L4 F/I	69-6544TS [1]	6.7 @ 5100
Lancer Evolution	2.0L L4 F/I	69-6546TWR [2]	21.4 @ 6100
Raider	3.7L V6 F/I	77-1558KP [1]	6.1 @ 4200
		57-1558 [1]	9.2 @ 4200
2007 MITSUBISHI			
Eclipse	3.8L V6 F/I	69-6502TR [2]	13.1 @ 5400
Raider	3.7L V6 F/I	77-1558KP [1]	6.1 @ 4200
		57-1558 [1]	9.2 @ 4200
Raider	4.7L V8 F/I	57-1546 [1]	9.2 @ 4524

1) Street legal in all US states. 2) Street legal in most states, but not legal for use in California or other states with similar emission control regulations.
* Estimated horsepower gains are based on specific or similar vehicle dyno tests. Results will vary. See Page 479 for more information.
Partial Listing - Complete List of Vehicles and Applications at knfilters.com. See page 5 for information on intake tube materials/colors.

Vehicle	Engine Type	Intake Kit	Estimated Horsepower*
2006 MITSUBISHI			
Eclipse	3.8L V6 F/I	69-6502TR [2]	13.1 @ 5400
Lancer	2.0L L4 F/I	69-6540TP [1]	4.3 @ 4491
		69-6540TB [1]	4.3 @ 4491
Raider	3.7L V6 F/I	77-1547KP [1]	6.0 @ 4943
		57-1547 [1]	8.7 @ 4749
Raider	4.7L V8 F/I	77-1546KP [1]	7.3 @ 4475
		57-1546 [1]	9.2 @ 4524
2005 MITSUBISHI			
Eclipse	2.4L L4 F/I	69-6506TS [1]	5.9 @ 4213
		69-6506TR [1]	5.9 @ 4213
Eclipse	3.0L V6 F/I	57-5505 [1]	5.4 @ 5500
Eclipse GT	3.0L V6 F/I	69-6501TP [1]	6.9 @ 5800
		69-6501TB [1]	6.9 @ 5800
		57-5505 [1]	5.4 @ 5500
Lancer	2.0L L4 F/I	69-6540TP [1]	4.3 @ 4491
		69-6540TB [1]	4.3 @ 4491
Lancer Evolution	2.0L L4 F/I	69-6543TR [2]	12.9 @ 5200
		69-6543TP [2]	12.9 @ 5200
2004 MITSUBISHI			
Eclipse	2.4L L4 F/I	69-6506TS [1]	5.9 @ 4213
		69-6506TR [1]	5.9 @ 4213
Eclipse	3.0L V6 F/I	57-5505 [1]	5.4 @ 5500
Eclipse GT	3.0L V6 F/I	69-6501TP [1]	6.9 @ 5800
		69-6501TB [1]	6.9 @ 5800
		57-5505 [1]	5.4 @ 5500
Lancer	2.0L L4 F/I	69-6540TP [1]	4.3 @ 4491
		69-6540TB [1]	4.3 @ 4491
Lancer Evolution	2.0L L4 F/I	69-6543TR [1]	12.9 @ 5200
		69-6543TP [1]	12.9 @ 5200
2003 MITSUBISHI			
Eclipse	2.4L L4 F/I	69-6506TS [1]	5.9 @ 4213
		69-6506TR [1]	5.9 @ 4213
Eclipse	3.0L V6 F/I	57-5505 [1]	5.4 @ 5500
Eclipse GT	3.0L V6 F/I	69-6501TP [1]	6.9 @ 5800
		69-6501TB [1]	6.9 @ 5800
		57-5505 [1]	5.4 @ 5500
Lancer	2.0L L4 F/I	69-6540TP [1]	4.3 @ 4491
		69-6540TB [1]	4.3 @ 4491
Lancer Evolution	2.0L L4 F/I	69-6543TR [1]	12.9 @ 5200
		69-6543TP [1]	12.9 @ 5200
2002 MITSUBISHI			
Eclipse	2.4L L4 F/I	69-6506TS [1]	5.9 @ 4213
		69-6506TR [1]	5.9 @ 4213
Eclipse	3.0L V6 F/I	69-6501TP [1]	6.9 @ 5800
		69-6501TB [1]	6.9 @ 5800
		57-5505 [1]	5.4 @ 5500
Lancer	2.0L L4 F/I	69-6540TP [1]	4.3 @ 4491
		69-6540TB [1]	4.3 @ 4491
2001 MITSUBISHI			
Eclipse	2.4L L4 F/I	69-6506TS [1]	5.9 @ 4213
		69-6506TR [1]	5.9 @ 4213
Eclipse	3.0L V6 F/I	69-6501TP [1]	6.9 @ 5800
		69-6501TB [1]	6.9 @ 5800
		57-5505 [1]	5.4 @ 5500
2000 MITSUBISHI			
Eclipse	2.4L L4 F/I	69-6506TS [1]	5.9 @ 4213
2000 MITSUBISHI			
Eclipse	2.4L L4 F/I	69-6506TR [1]	5.9 @ 4213
Eclipse	3.0L V6 F/I	69-6501TP [1]	6.9 @ 5800
		69-6501TB [1]	6.9 @ 5800
		57-5505 [1]	5.4 @ 5500
1999 MITSUBISHI			
3000GT	3.0L V6 F/I	57-1500-1 [1]	
Eclipse	2.0L L4 F/I - Turbo	57-5504-1 [1]	7.7 @ 5900
1998 MITSUBISHI			
3000GT	3.0L V6 F/I	57-1500-1 [1]	
Eclipse	2.0L L4 F/I - Turbo	57-5504-1 [1]	7.7 @ 5900
1997 MITSUBISHI			
3000GT	3.0L V6 F/I	57-1500-1 [1]	
Eclipse	2.0L L4 F/I - Turbo	57-5504-1 [1]	7.7 @ 5900
1996 MITSUBISHI			
3000GT	3.0L V6 F/I	57-1500-1 [1]	
Eclipse	2.0L L4 F/I - Turbo	57-5504-1 [1]	7.7 @ 5900
1995 MITSUBISHI			
3000GT	3.0L V6 F/I	57-1500-1 [1]	
Eclipse	2.0L L4 F/I - Turbo	57-5504-1 [1]	7.7 @ 5900
1994 MITSUBISHI			
3000GT	3.0L V6 F/I	57-1500-1 [1]	
1993 MITSUBISHI			
3000GT	3.0L V6 F/I	57-1500-1 [1]	
Eclipse	2.0L L4 F/I - exc. Turbo	57-5500 [1]	
1992 MITSUBISHI			
3000GT	3.0L V6 F/I	57-1500-1 [1]	
Eclipse	2.0L L4 F/I - exc. Turbo	57-5500 [1]	
1991 MITSUBISHI			
3000GT	3.0L V6 F/I	57-1500-1 [1]	
Eclipse	2.0L L4 F/I - exc. Turbo	57-5500 [1]	
1990 MITSUBISHI			
Eclipse	2.0L L4 F/I - exc. Turbo	57-5500 [1]	
2013 NISSAN			
Maxima	3.5L V6 F/I	69-7002TTK [2]	13.3 @ 5249
2012 NISSAN			
370Z	3.7L V6 F/I	69-7078TS [2]	14.2 @ 5600
370Z Nismo	3.7L V6 F/I	69-7078TS [2]	14.2 @ 5600
Altima	2.5L L4 F/I	69-7061TS [2]	6.9 @ 4927
Altima	3.5L V6 F/I	69-7062TTK [2]	9.4 @ 4300
Armada	5.6L V8 F/I	77-6012KP [2]	7.3 @ 4914
		63-6012 [2]	11.2 @ 5073
Frontier	4.0L V6 F/I	77-6014-1KP [2]	11.6 @ 5200
		63-6014 [2]	14.3 @ 5075
Maxima	3.5L V6 F/I	69-7002TTK [2]	13.3 @ 5249
Pathfinder	4.0L V6 F/I	77-6014-1KP [2]	11.6 @ 5200
		63-6014 [2]	14.3 @ 5075
Pathfinder	5.6L V8 F/I	77-6016KS [2]	10.8 @ 5137
Sentra	2.5L L4 F/I	69-7001TTK [2]	6.7 @ 5900
Titan	5.6L V8 F/I	77-6012KP [2]	7.3 @ 4914
		63-6012 [2]	11.2 @ 5073
Xterra	4.0L V6 F/I	77-6014-1KP [2]	11.6 @ 5200
		63-6014 [2]	14.3 @ 5075
2011 NISSAN			
370Z	3.7L V6 F/I	69-7078TS [2]	14.2 @ 5600

1) Street legal in all US states. 2) Street legal in most states, but not legal for use in California or other states with similar emission control regulations.
* Estimated horsepower gains are based on specific or similar vehicle dyno tests. Results will vary. See Page 479 for more information.
Partial Listing - Complete List of Vehicles and Applications at knfilters.com. See page 5 for information on intake tube materials/colors.

AIR INTAKE SYSTEMS

2011 NISSAN

Vehicle	Engine Type	Intake Kit	Estimated Horsepower*
370Z Nismo	3.7L V6 F/I	69-7078TS [2]	14.2 @ 5600
Altima	2.5L L4 F/I	69-7061TS [2]	6.9 @ 4927
Altima	3.5L V6 F/I	69-7062TTK [2]	9.4 @ 4300
Armada	5.6L V8 F/I	77-6012KP [2]	7.3 @ 4914
		63-6012 [2]	11.2 @ 5073
Frontier	4.0L V6 F/I	77-6014-1KP [2]	11.6 @ 5200
		63-6014 [2]	14.3 @ 5075
Maxima	3.5L V6 F/I	69-7002TTK [2]	13.3 @ 5249
Pathfinder	4.0L V6 F/I	77-6014-1KP [2]	11.6 @ 5200
		63-6014 [2]	14.3 @ 5075
Pathfinder	5.6L V8 F/I	77-6016KS [2]	10.8 @ 5137
Sentra	2.5L L4 F/I	69-7001TTK [2]	6.7 @ 5900
Titan	5.6L V8 F/I	77-6012KP [2]	7.3 @ 4914
		63-6012 [2]	11.2 @ 5073
Xterra	4.0L V6 F/I	77-6014-1KP [2]	11.6 @ 5200
		63-6014 [2]	14.3 @ 5075

2010 NISSAN

Vehicle	Engine Type	Intake Kit	Estimated Horsepower*
370Z	3.7L V6 F/I	69-7078TS [2]	14.2 @ 5600
370Z Nismo	3.7L V6 F/I	69-7078TS [2]	14.2 @ 5600
Altima	2.5L L4 F/I	69-7061TS [1]	6.9 @ 4927
Altima	3.5L V6 F/I	69-7062TTK [1]	9.4 @ 4300
Armada	5.6L V8 F/I	77-6012KP [1]	7.3 @ 4914
		63-6012 [2]	11.2 @ 5073
		57-6012 [1]	11.2 @ 5073
Cube	1.8L L4 F/I	69-7077TTK [2]	7.8 @ 4886
Frontier	4.0L V6 F/I	77-6014-1KP [2]	11.6 @ 5200
		63-6014 [2]	14.3 @ 5075
Maxima	3.5L V6 F/I	69-7002TTK [2]	13.3 @ 5249
Pathfinder	4.0L V6 F/I	77-6014-1KP [2]	11.6 @ 5200
		63-6014 [2]	14.3 @ 5075
Pathfinder	5.6L V8 F/I	77-6016KS [2]	10.8 @ 5137
Sentra	2.5L L4 F/I	69-7001TTK [1]	6.7 @ 5900
Titan	5.6L V8 F/I	77-6012KP [1]	7.3 @ 4914
		63-6012 [2]	11.2 @ 5073
		57-6012 [1]	11.2 @ 5073
Xterra	4.0L V6 F/I	77-6014-1KP [2]	11.6 @ 5200
		63-6014 [2]	14.3 @ 5075

2009 NISSAN

Vehicle	Engine Type	Intake Kit	Estimated Horsepower*
370Z	3.7L V6 F/I	69-7078TS [2]	14.2 @ 5600
370Z Nismo	3.7L V6 F/I	69-7078TS [2]	14.2 @ 5600
Altima	2.5L L4 F/I	69-7061TS [1]	6.9 @ 4927
Altima	3.5L V6 F/I	69-7062TTK [1]	9.4 @ 4300
Armada	5.6L V8 F/I	77-6012KP [1]	7.3 @ 4914
		63-6012 [2]	11.2 @ 5073
		57-6012 [1]	11.2 @ 5073
Cube	1.8L L4 F/I	69-7077TTK [2]	7.8 @ 4886
Frontier	4.0L V6 F/I	77-6014-1KP [2]	11.6 @ 5200
		63-6014 [2]	14.3 @ 5075
Maxima	3.5L V6 F/I	69-7002TTK [2]	13.3 @ 5249
Pathfinder	4.0L V6 F/I	77-6014-1KP [2]	11.6 @ 5200
		63-6014 [2]	14.3 @ 5075
Sentra	2.5L L4 F/I	69-7001TTK [1]	6.7 @ 5900
Titan	5.6L V8 F/I	77-6012KP [1]	7.3 @ 4914
		63-6012 [2]	11.2 @ 5073
		57-6012 [1]	11.2 @ 5073
Xterra	4.0L V6 F/I	77-6014-1KP [2]	11.6 @ 5200
		63-6014 [2]	14.3 @ 5075

2008 NISSAN

Vehicle	Engine Type	Intake Kit	Estimated Horsepower*
350Z	3.5L V6 F/I	69-7071TS [1]	8.2 @ 5800
Altima	2.5L L4 F/I	69-7061TS [1]	6.9 @ 4927
Altima	3.5L V6 F/I	69-7062TTK [1]	9.4 @ 4300
Armada	5.6L V8 F/I	77-6012KP [1]	7.3 @ 4914
		63-6012 [2]	11.2 @ 5073
		57-6012 [1]	11.2 @ 5073
Frontier	4.0L V6 F/I	77-6014-1KP [2]	11.6 @ 5200
		63-6014 [2]	14.3 @ 5075
Maxima	3.5L V6 F/I	63-6015 [2]	7.4 @ 5001
		57-6015 [1]	7.4 @ 5001
Pathfinder	4.0L V6 F/I	77-6014-1KP [2]	11.6 @ 5200
		63-6014 [2]	14.3 @ 5075
Pathfinder	5.6L V8 F/I	77-6016KS [1]	10.8 @ 5137
		63-6016 [2]	
		57-6016 [2]	
Sentra	2.5L L4 F/I	69-7001TTK [1]	6.7 @ 5900
Titan	5.6L V8 F/I	77-6012KP [1]	7.3 @ 4914
		63-6012 [2]	11.2 @ 5073
		57-6012 [1]	11.2 @ 5073
Xterra	4.0L V6 F/I	77-6014-1KP [2]	11.6 @ 5200
		63-6014 [2]	14.3 @ 5075

2007 NISSAN

Vehicle	Engine Type	Intake Kit	Estimated Horsepower*
350Z	3.5L V6 F/I	69-7071TS [1]	8.2 @ 5800
Altima	2.5L L4 F/I	69-7061TS [1]	6.9 @ 4927
Altima	3.5L V6 F/I	69-7062TTK [1]	9.4 @ 4300
Armada	5.6L V8 F/I	77-6012KP [1]	7.3 @ 4914
		57-6012 [1]	11.2 @ 5073
Frontier	4.0L V6 F/I	77-6014-1KP [1]	11.6 @ 5200
		57-6014 [1]	14.3 @ 5075
Maxima	3.5L V6 F/I	63-6015 [2]	7.4 @ 5001
		57-6015 [1]	7.4 @ 5001
Pathfinder	4.0L V6 F/I	77-6014-1KP [1]	11.6 @ 5200
		57-6014 [1]	14.3 @ 5075
Sentra	2.5L L4 F/I	69-7001TTK [1]	6.7 @ 5900
Titan	5.6L V8 F/I	77-6012KP [1]	7.3 @ 4914
		57-6012 [1]	11.2 @ 5073
Xterra	4.0L V6 F/I	77-6014-1KP [1]	11.6 @ 5200
		57-6014 [1]	14.3 @ 5075

2006 NISSAN

Vehicle	Engine Type	Intake Kit	Estimated Horsepower*
350Z	3.5L V6 F/I	69-7070TP [1]	7.7 @ 6208
		69-7070TB [1]	7.7 @ 6208
		57-6013 [1]	10.7 @ 5500
Altima	2.5L L4 F/I - exc. SULEV & LEV2 Eng.	69-7060TS [1]	7.0 @ 5498
Altima	3.5L V6 F/I	63-6015 [2]	7.4 @ 5001
		57-6015 [1]	7.4 @ 5001
Armada	5.6L V8 F/I	77-6012KP [1]	7.3 @ 4914
		57-6012 [1]	11.2 @ 5073
Frontier	4.0L V6 F/I	77-6014-1KP [1]	11.6 @ 5200
		57-6014 [1]	14.3 @ 5075
Maxima	3.5L V6 F/I	63-6015 [2]	7.4 @ 5001
		57-6015 [1]	7.4 @ 5001
Pathfinder	4.0L V6 F/I	77-6014-1KP [1]	11.6 @ 5200
		57-6014 [1]	14.3 @ 5075
Sentra	2.5L L4 F/I	69-7000TR [1]	7.7 @ 5253
		69-7000TP [1]	7.7 @ 5253
Titan	5.6L V8 F/I	77-6012KP [1]	7.3 @ 4914
		57-6012 [1]	11.2 @ 5073

1) Street legal in all US states. 2) Street legal in most states, but not legal for use in California or other states with similar emission control regulations.
* Estimated horsepower gains are based on specific or similar vehicle dyno tests. Results will vary. See Page 479 for more information.
Partial Listing - Complete List of Vehicles and Applications at knfilters.com. See page 5 for information on intake tube materials/colors.

Vehicle	Engine Type	Intake Kit	Estimated Horsepower*
2006 NISSAN			
Xterra	4.0L V6 F/I	77-6014-1KP [1]	11.6 @ 5200
		57-6014 [1]	14.3 @ 5075
2005 NISSAN			
350Z	3.5L V6 F/I	69-7070TP [1]	7.7 @ 6208
		69-7070TB [1]	7.7 @ 6208
		57-6013 [1]	10.7 @ 5500
Altima	2.5L L4 F/I - exc. SULEV & LEV2 Eng.	69-7060TS [1]	7.0 @ 5498
Altima	3.5L V6 F/I	63-6015 [2]	7.4 @ 5001
		57-6015 [1]	7.4 @ 5001
Armada	5.6L V8 F/I	77-6012KP [1]	7.3 @ 4914
		57-6012 [1]	11.2 @ 5073
Frontier	4.0L V6 F/I	77-6014-1KP [1]	11.6 @ 5200
		57-6014 [1]	14.3 @ 5075
Maxima	3.5L V6 F/I	63-6015 [2]	7.4 @ 5001
		57-6015 [1]	7.4 @ 5001
Pathfinder	4.0L V6 F/I	77-6014-1KP [1]	11.6 @ 5200
		57-6014 [1]	14.3 @ 5075
Sentra	2.5L L4 F/I	69-7000TR [1]	7.7 @ 5253
		69-7000TP [1]	7.7 @ 5253
Titan	5.6L V8 F/I	77-6012KP [1]	7.3 @ 4914
		57-6012 [1]	11.2 @ 5073
Xterra	4.0L V6 F/I	77-6014-1KP [1]	11.6 @ 5200
		57-6014 [1]	14.3 @ 5075
2004 NISSAN			
350Z	3.5L V6 F/I	69-7070TP [1]	7.7 @ 6208
		69-7070TB [1]	7.7 @ 6208
		57-6013 [1]	10.7 @ 5500
Altima	2.5L L4 F/I - exc. SULEV & LEV2 Eng.	69-7060TS [1]	7.0 @ 5498
Altima	3.5L V6 F/I	63-6015 [2]	7.4 @ 5001
		57-6015 [1]	7.4 @ 5001
Frontier	3.3L V6 F/I - exc. S/C	57-6005 [1]	5.5 @ 4847
Frontier	3.3L V6 F/I - S/C	57-6010 [1]	12.7 @ 4824
Maxima	3.5L V6 F/I	63-6015 [2]	7.4 @ 5001
		57-6015 [1]	7.4 @ 5001
Pathfinder	3.5L V6 F/I	57-6011 [1]	14.5 @ 5918
Pathfinder	5.6L V8 F/I	77-6012KP [1]	7.3 @ 4914
		57-6012 [1]	11.2 @ 5073
Sentra	2.5L L4 F/I	69-7000TR [1]	7.7 @ 5253
		69-7000TP [1]	7.7 @ 5253
Titan	5.6L V8 F/I	77-6012KP [1]	7.3 @ 4914
		57-6012 [1]	11.2 @ 5073
Xterra	3.3L V6 F/I - exc. S/C	57-6005 [1]	5.5 @ 4847
Xterra	3.3L V6 F/I - S/C	57-6010 [1]	12.7 @ 4824
2003 NISSAN			
350Z	3.5L V6 F/I	69-7070TP [1]	7.7 @ 6208
		69-7070TB [1]	7.7 @ 6208
		57-6013 [1]	10.7 @ 5500
Altima	2.5L L4 F/I	69-7060TS [1]	7.0 @ 5498
Frontier	3.3L V6 F/I - exc. S/C	57-6005 [1]	5.5 @ 4847
Frontier	3.3L V6 F/I - S/C	57-6010 [1]	12.7 @ 4824
Pathfinder	3.5L V6 F/I	57-6011 [1]	14.5 @ 5918
Sentra	2.5L L4 F/I	69-7000TR [1]	7.7 @ 5253
		69-7000TP [1]	7.7 @ 5253
Xterra	3.3L V6 F/I - exc. S/C	57-6005 [1]	5.5 @ 4847
Xterra	3.3L V6 F/I - S/C	57-6010 [1]	12.7 @ 4824
2002 NISSAN			
Altima	2.5L L4 F/I	69-7060TS [1]	7.0 @ 5498
Frontier	3.3L V6 F/I - exc. S/C	57-6005 [1]	5.5 @ 4847
Frontier	3.3L V6 F/I - S/C	57-6010 [1]	12.7 @ 4824
Pathfinder	3.5L V6 F/I	57-6011 [1]	14.5 @ 5918
Sentra	2.5L L4 F/I	69-7000TR [1]	7.7 @ 5253
		69-7000TP [1]	7.7 @ 5253
Xterra	3.3L V6 F/I - exc. S/C	57-6005 [1]	5.5 @ 4847
Xterra	3.3L V6 F/I - S/C	57-6010 [1]	12.7 @ 4824
2001 NISSAN			
Frontier	3.3L V6 F/I - exc. S/C	57-6005 [1]	5.5 @ 4847
Frontier	3.3L V6 F/I - S/C	57-6010 [1]	12.7 @ 4824
Pathfinder	3.5L V6 F/I	57-6011 [1]	14.5 @ 5918
Xterra	3.3L V6 F/I	57-6005 [1]	5.5 @ 4847
2000 NISSAN			
Frontier	3.3L V6 F/I	57-6005 [1]	5.5 @ 4847
Xterra	3.3L V6 F/I	57-6005 [1]	5.5 @ 4847
1999 NISSAN			
Frontier	3.3L V6 F/I	57-6005 [1]	5.5 @ 4847
1998 NISSAN			
240SX	2.4L L4 F/I	69-7076TS [2]	4.9 @ 4471
1997 NISSAN			
240SX	2.4L L4 F/I	69-7076TS [2]	4.9 @ 4471
1996 NISSAN			
240SX	2.4L L4 F/I	69-7076TS [2]	4.9 @ 4471
1995 NISSAN			
240SX	2.4L L4 F/I	69-7076TS [2]	4.9 @ 4471
1994 NISSAN			
240SX	2.4L L4 F/I	69-7075TS [2]	10.7 @ 4500
Sentra	2.0L L4 F/I	57-6003 [1]	
1993 NISSAN			
240SX	2.4L L4 F/I	69-7075TS [2]	10.7 @ 4500
		57-6000 [1]	
300ZX	3.0L V6 F/I	57-6001 [1]	
Sentra	2.0L L4 F/I	57-6003 [1]	
1992 NISSAN			
240SX	2.4L L4 F/I	69-7075TS [2]	10.7 @ 4500
		57-6000 [1]	
300ZX	3.0L V6 F/I	57-6001 [1]	
Sentra	2.0L L4 F/I	57-6003 [1]	
1991 NISSAN			
240SX	2.4L L4 F/I	69-7075TS [2]	10.7 @ 4500
		57-6000 [1]	
300ZX	3.0L V6 F/I	57-6001 [1]	
Sentra	2.0L L4 F/I	57-6003 [1]	
1990 NISSAN			
240SX	2.4L L4 F/I	57-6000 [1]	
300ZX	3.0L V6 F/I - US	57-6001 [1]	
1989 NISSAN			
240SX	2.4L L4 F/I	57-6000 [1]	
300ZX	3.0L V6 F/I	57-6002 [1]	
1988 NISSAN			
300ZX	3.0L V6 F/I	57-6002 [1]	

1) Street legal in all US states. 2) Street legal in most states, but not legal for use in California or other states with similar emission control regulations.
* Estimated horsepower gains are based on specific or similar vehicle dyno tests. Results will vary. See Page 479 for more information.
Partial Listing - Complete List of Vehicles and Applications at knfilters.com. See page 5 for information on intake tube materials/colors.

AIR INTAKE SYSTEMS

Vehicle	Engine Type	Intake Kit	Estimated Horsepower*
1987 NISSAN			
300ZX	3.0L V6 F/I	57-6002 [1]	
1986 NISSAN			
300ZX	3.0L V6 F/I	57-6002 [1]	
1985 NISSAN			
300ZX	3.0L V6 F/I	57-6002 [1]	
1984 NISSAN			
300ZX	3.0L V6 F/I	57-6002 [1]	
2003 OLDSMOBILE			
Bravada	4.2L L6 F/I	77-3036KP [1]	10.9 @ 5474
		57-3036 [1]	9.3 @ 5623
2002 OLDSMOBILE			
Bravada	4.2L L6 F/I	77-3036KP [1]	10.9 @ 5474
		57-3036 [1]	9.3 @ 5623
2004 OPEL			
Astra G	1.8L L4 F/I - 125BHP	69-4900TS [2]	
2005 PEUGEOT			
206	1.6L L4 F/I - to 9/05	69-7501TS [2]	
206 RC	2.0L L4 F/I	69-7503TS [2]	
		69-7503TB [2]	
2004 PEUGEOT			
206	1.6L L4 F/I	69-7501TS [2]	
206 RC	2.0L L4 F/I	69-7503TS [2]	
		69-7503TB [2]	
2003 PEUGEOT			
206	1.6L L4 F/I	69-7501TS [2]	
2002 PEUGEOT			
206	1.6L L4 F/I	69-7501TS [2]	
206	2.0L L4 F/I	69-7505TR [2]	
2001 PEUGEOT			
206	1.6L L4 F/I	69-7501TS [2]	
2000 PEUGEOT			
206	1.6L L4 F/I - 16v	69-7501TS [2]	
1999 PLYMOUTH			
Neon	2.0L L4 F/I - SOHC	57-1512 [1]	6.0 @ 5810
1998 PLYMOUTH			
Neon	2.0L L4 F/I - SOHC	57-1512 [1]	6.0 @ 5810
1997 PLYMOUTH			
Neon	2.0L L4 F/I - SOHC	57-1512 [1]	6.0 @ 5810
1995 PLYMOUTH			
Neon	2.0L L4 F/I - SOHC	57-1512 [1]	6.0 @ 5810
2010 PONTIAC			
G6	3.5L V6 F/I	69-7202-1TTK [2]	5.2 @ 5196
2009 PONTIAC			
G6	3.5L V6 F/I	69-7202-1TTK [2]	5.2 @ 5196
G8	3.6L V6 F/I	63-3072 [2]	10.7 @ 6200
G8	6.0L V8 F/I	63-3071 [2]	11.9 @ 4700
Solstice	2.4L L4 F/I	69-8432TS [2]	5.4 @ 4700
2008 PONTIAC			
G6	3.5L V6 F/I	69-7202-1TTK [2]	5.2 @ 5196
G8	3.6L V6 F/I	63-3072 [2]	10.7 @ 6200
G8	6.0L V8 F/I	63-3071 [2]	11.9 @ 4700
2008 PONTIAC			
Grand Prix	5.3L V8 F/I	63-3059 [2]	13.5 @ 5222
Solstice	2.0L L4 F/I	69-8433TTK [2]	11.0 @ 4900
Solstice	2.4L L4 F/I	69-8432TS [1]	5.4 @ 4700
2007 PONTIAC			
G6	3.5L V6 F/I	69-7202-1TTK [1]	5.2 @ 5196
Grand Prix	5.3L V8 F/I	63-3059 [2]	13.5 @ 5222
Solstice	2.4L L4 F/I	69-8432TS [1]	5.4 @ 4700
2006 PONTIAC			
G6	3.5L V6 F/I	69-7202-1TTK [1]	5.2 @ 5196
Grand Prix	5.3L V8 F/I	63-3059 [2]	13.5 @ 5222
GTO	6.0L V8 F/I	63-3053 [2]	14.0 @ 5700
Solstice	2.4L L4 F/I	69-8432TS [1]	5.4 @ 4700
Vibe GT	1.8L L4 F/I	69-8601TR [2]	11.9 @ 7700
		69-8601TP [2]	11.9 @ 7700
2005 PONTIAC			
G6	3.5L V6 F/I	69-7202-1TTK [1]	5.2 @ 5196
Grand Prix	3.8L V6 F/I - Exc. w/Air Injection	57-3049 [1]	16.8 @ 5248
GTO	6.0L V8 F/I	69-7201TP [1]	10.3 @ 5100
		57-3053 [1]	14.0 @ 5700
Vibe GT	1.8L L4 F/I	69-8601TR [2]	11.9 @ 7700
		69-8601TP [2]	11.9 @ 7700
2004 PONTIAC			
Grand Prix	3.8L V6 F/I - Exc. w/Air Injection	57-3049 [1]	16.8 @ 5248
GTO	5.7L V8 F/I	69-7200TP [1]	15.4 @ 5100
		57-3044 [1]	18.6 @ 5818
Sunfire	2.2L L4 F/I	69-4510TS [1]	5.4 @ 5223
Sunfire Ecotec	2.2L L4 F/I	69-4510TS [1]	5.4 @ 5223
Vibe	1.8L L4 F/I	69-8600TR [1]	8.7 @ 6250
		69-8600TP [1]	8.7 @ 6250
Vibe GT	1.8L L4 F/I	69-8601TR [1]	11.9 @ 7700
		69-8601TP [1]	11.9 @ 7700
2003 PONTIAC			
Grand Prix	3.8L V6 F/I	57-3045 [1]	13.3 @ 5224
Sunfire Ecotec	2.2L L4 F/I	69-4510TS [1]	5.4 @ 5223
Vibe	1.8L L4 F/I	69-8600TR [1]	8.7 @ 6250
		69-8600TP [1]	8.7 @ 6250
Vibe GT	1.8L L4 F/I	69-8601TR [1]	11.9 @ 7700
		69-8601TP [1]	11.9 @ 7700
2002 PONTIAC			
Firebird	3.8L V6 F/I	57-3041 [1]	6.8 @ 5066
Firebird	5.7L V8 F/I	57-3022-2 [1]	14.7 @ 5300
Grand Prix	3.8L V6 F/I	57-3045 [1]	13.3 @ 5224
Sunfire Ecotec	2.2L L4 F/I	69-4510TS [1]	5.4 @ 5223
2001 PONTIAC			
Firebird	3.8L V6 F/I	57-3041 [1]	6.8 @ 5066
Firebird	5.7L V8 F/I	57-3022-2 [1]	14.7 @ 5300
Grand Prix	3.8L V6 F/I	57-3045 [1]	13.3 @ 5224
2000 PONTIAC			
Firebird	3.8L V6 F/I	57-3041 [1]	6.8 @ 5066
Firebird	5.7L V8 F/I	57-3022-2 [1]	14.7 @ 5300
Grand Prix	3.8L V6 F/I	57-3045 [1]	13.3 @ 5224
1999 PONTIAC			
Firebird	3.8L V6 F/I	57-3041 [1]	6.8 @ 5066
Firebird	5.7L V8 F/I	57-3022-2 [1]	14.7 @ 5300

1) Street legal in all US states. 2) Street legal in most states, but not legal for use in California or other states with similar emission control regulations.
* Estimated horsepower gains are based on specific or similar vehicle dyno tests. Results will vary. See Page 479 for more information.
Partial Listing - Complete List of Vehicles and Applications at knfilters.com. See page 5 for information on intake tube materials/colors.

Vehicle	Engine Type	Intake Kit	Estimated Horsepower*
1999 PONTIAC			
Grand Prix	3.8L V6 F/I	57-3045 [1]	13.3 @ 5224
1998 PONTIAC			
Firebird	5.7L V8 F/I	57-3022-2 [1]	14.7 @ 5300
1997 PONTIAC			
Firebird	5.7L V8 F/I - w/o ram air or traction control	57-3010-1 [1]	18.3 @ 5331
1996 PONTIAC			
Firebird	5.7L V8 F/I - w/o ram air or traction control	57-3010-1 [1]	18.3 @ 5331
1995 PONTIAC			
Firebird	3.4L V6 F/I - w/o ram air or traction control	57-3010-1 [1]	18.3 @ 5331
Firebird	5.7L V8 F/I - w/o ram air or traction control	57-3010-1 [1]	18.3 @ 5331
1994 PONTIAC			
Firebird	3.4L V6 F/I - w/o ram air or traction control	57-3010-1 [1]	18.3 @ 5331
Firebird	5.7L V8 F/I - w/o ram air or traction control	57-3010-1 [1]	18.3 @ 5331
1993 PONTIAC			
Firebird	3.4L V6 F/I - w/o ram air or traction control	57-3010-1 [1]	18.3 @ 5331
Firebird	5.7L V8 F/I - w/o ram air or traction control	57-3010-1 [1]	18.3 @ 5331
2007 PORSCHE			
911 GT3	3.6L H6 F/I	63-7001 [2]	24.7 @ 6726
		57-7001 [1]	24.7 @ 6726
2005 PORSCHE			
911	3.6L H6 F/I - exc. Turbo	57-7000 [1]	23.8 @ 5500
2004 PORSCHE			
911	3.6L H6 F/I - exc. Turbo	57-7000 [1]	23.8 @ 5500
2003 PORSCHE			
911 Carrera	3.6L H6 F/I	57-7000 [1]	23.8 @ 5500
2002 PORSCHE			
911	3.6L H6 F/I	57-7000 [1]	23.8 @ 5500
911 Carrera	3.6L H6 F/I	57-7000 [1]	23.8 @ 5500
2001 PORSCHE			
911	3.4L H6 F/I	57-7000 [1]	23.8 @ 5500
911	3.6L H6 F/I - US	57-7000 [1]	23.8 @ 5500
2000 PORSCHE			
911	3.4L H6 F/I	57-7000 [1]	23.8 @ 5500
1999 PORSCHE			
911	3.4L H6 F/I	57-7000 [1]	23.8 @ 5500
2012 RAM			
1500	4.7L V8 F/I	77-1529KP [2]	6.8 @ 4743
		63-1529 [2]	8.6 @ 4688
1500	5.7L V8 F/I	77-1561KP [2]	10.3 @ 4382
		63-1561 [2]	15.7 @ 4688
2500	6.7L L6 DSL	63-1562 [2]	8.2 @ 2919
3500	6.7L L6 DSL	63-1562 [2]	8.2 @ 2919
2011 RAM			
1500	3.7L V6 F/I	63-1537 [2]	7.4 @ 5223
1500	4.7L V8 F/I	77-1529KP [2]	6.8 @ 4743
		63-1529 [2]	10.8 @ 4695
1500	5.7L V8 F/I	77-1561KP [2]	10.3 @ 4382
2011 RAM			
1500	5.7L V8 F/I	63-1561 [2]	15.7 @ 4688
2500	6.7L L6 DSL	63-1562 [2]	8.2 @ 2919
3500	6.7L L6 DSL	63-1562 [2]	8.2 @ 2919
2001 RENAULT			
Clio II	2.0L L4 F/I - w/Round Filter	69-7800TS [2]	
2009 SATURN			
Sky	2.4L L4 F/I	69-8432TS [2]	5.4 @ 4700
2008 SATURN			
Sky	2.0L L4 F/I	69-8433TTK [2]	11.0 @ 4900
Sky	2.4L L4 F/I	69-8432TS [1]	5.4 @ 4700
2007 SATURN			
Sky	2.4L L4 F/I	69-8432TS [1]	5.4 @ 4700
Vue	3.5L V6 F/I	77-3000KS [1]	11.8 @ 5420
		77-3000KP [1]	11.8 @ 5420
2006 SATURN			
Ion	2.0L L4 F/I	69-8431TP [2]	14.4 @ 6000
Vue	3.5L V6 F/I	77-3000KS [1]	11.8 @ 5420
		77-3000KP [1]	11.8 @ 5420
2005 SATURN			
Ion	2.0L L4 F/I	69-8431TP [1]	14.4 @ 6000
Vue	3.5L V6 F/I	77-3000KS [1]	11.8 @ 5420
		77-3000KP [1]	11.8 @ 5420
2004 SATURN			
Ion	2.0L L4 F/I	69-8431TP [1]	14.4 @ 6000
Vue	3.5L V6 F/I	77-3000KS [1]	11.8 @ 5420
		77-3000KP [1]	11.8 @ 5420
1996 SATURN			
SC2	1.9L L4 F/I - exc. TLEV models	57-3012 [1]	
SL2	1.9L L4 F/I - exc. TLEV models	57-3012 [1]	
1995 SATURN			
SC2	1.9L L4 F/I	57-3012 [1]	
SL2	1.9L L4 F/I	57-3012 [1]	
1994 SATURN			
SC2	1.9L L4 F/I	57-3012 [1]	
SL2	1.9L L4 F/I	57-3012 [1]	
1993 SATURN			
SL2	1.9L L4 F/I	57-3012 [1]	
1992 SATURN			
SL2	1.9L L4 F/I	57-3012 [1]	
2013 SCION			
tC	2.5L L4 F/I	69-8616TS [2]	6.1 @ 5712
2012 SCION			
tC	2.5L L4 F/I	69-8616TS [2]	6.1 @ 5712
xB	2.4L L4 F/I	69-8613TS [2]	9.1 @ 5026
2011 SCION			
tC	2.5L L4 F/I	69-8616TS [2]	6.1 @ 5712
xB	2.4L L4 F/I	69-8613TS [2]	9.1 @ 5026
xD	1.8L L4 F/I	69-8615TS [2]	5.5 @ 5300
2010 SCION			
tC	2.4L L4 F/I	69-8614TS [2]	8.1 @ 5467
xB	2.4L L4 F/I	69-8613TS [2]	9.1 @ 5026

1) Street legal in all US states. 2) Street legal in most states, but not legal for use in California or other states with similar emission control regulations.
* Estimated horsepower gains are based on specific or similar vehicle dyno tests. Results will vary. See Page 479 for more information.
Partial Listing - Complete List of Vehicles and Applications at knfilters.com. See page 5 for information on intake tube materials/colors.

AIR INTAKE SYSTEMS

Vehicle	Engine Type	Intake Kit	Estimated Horsepower*
2010 SCION			
xD	1.8L L4 F/I	69-8615TS [2]	5.5 @ 5300
2009 SCION			
tC	2.4L L4 F/I	69-8614TS [2]	8.1 @ 5467
xB	2.4L L4 F/I	69-8613TS [2]	9.1 @ 5026
xD	1.8L L4 F/I	69-8615TS [2]	5.5 @ 5300
2008 SCION			
tC	2.4L L4 F/I	69-8614TS [2]	8.1 @ 5467
xB	2.4L L4 F/I	69-8613TS [2]	9.1 @ 5026
xD	1.8L L4 F/I	69-8615TS [2]	5.5 @ 5300
2007 SCION			
tC	2.4L L4 F/I	69-8614TS [2]	8.1 @ 5467
xB	1.5L L4 F/I	69-8605TS [2]	8.0 @ 5450
2006 SCION			
tC	2.4L L4 F/I	69-8608TFK [1]	7.6 @ 5000
		69-8607TS [2]	6.0 @ 5412
		69-8607TB [2]	6.0 @ 5412
xA	1.5L L4 F/I	69-8606TP [2]	4.4 @ 4925
		69-8606TB [2]	4.4 @ 4925
xB	1.5L L4 F/I	69-8605TS [2]	8.0 @ 5450
2005 SCION			
tC	2.4L L4 F/I	69-8608TFK [1]	7.6 @ 5000
		69-8607TS [2]	6.0 @ 5412
		69-8607TB [2]	6.0 @ 5412
xA	1.5L L4 F/I	69-8606TP [1]	4.4 @ 4925
		69-8606TB [1]	4.4 @ 4925
xB	1.5L L4 F/I	69-8605TS [1]	8.0 @ 5450
2004 SCION			
xA	1.5L L4 F/I	69-8606TP [1]	4.4 @ 4925
		69-8606TB [1]	4.4 @ 4925
xB	1.5L L4 F/I	69-8605TS [1]	8.0 @ 5450
2008 SEAT			
Leon	2.0L L4 DSL	69-9756TFK [2]	
Leon	2.0L L4 F/I - 200BHP	69-9503TFK [2]	18.6 @ 4500
2003 SKODA			
Octavia	1.8L L4 F/I - 150/180BHP	69-9501TP [2]	10.0 @ 5079
		69-9501TB [2]	10.0 @ 5079
2013 SUBARU			
Impreza WRX	2.5L H4 F/I	69-8004TTK [2]	14.3 @ 5228
2012 SUBARU			
Impreza WRX	2.5L H4 F/I	69-8004TTK [2]	14.3 @ 5228
Impreza WRX STi	2.5L H4 F/I	69-8005TWR [2]	17.5 @ 5260
2011 SUBARU			
Impreza WRX	2.5L H4 F/I	69-8004TTK [2]	14.3 @ 5228
Impreza WRX STi	2.5L H4 F/I	69-8005TWR [2]	17.5 @ 5260
2010 SUBARU			
Impreza WRX	2.5L H4 F/I	69-8004TTK [1]	14.3 @ 5228
Impreza WRX STi	2.5L H4 F/I	69-8005TWR [1]	17.5 @ 5260
2009 SUBARU			
Impreza WRX	2.5L H4 F/I	69-8004TTK [1]	14.3 @ 5228
Impreza WRX STi	2.5L H4 F/I	69-8005TWR [1]	17.5 @ 5260
Legacy GT	2.5L H4 F/I	69-8003TFK [2]	14.9 @ 4700
2008 SUBARU			
Impreza WRX	2.5L H4 F/I - US	69-8004TTK [1]	14.3 @ 5228
Impreza WRX STi	2.5L H4 F/I	69-8005TWR [1]	17.5 @ 5260
Legacy GT	2.5L H4 F/I	69-8003TFK [1]	14.9 @ 4700
2007 SUBARU			
Impreza WRX	2.0L H4 F/I	69-8001TWR [2]	15.9 @ 5050
		69-8001TS [2]	15.9 @ 5050
Impreza WRX	2.5L H4 F/I	69-8001TWR [1]	15.9 @ 5050
		69-8001TS [1]	15.9 @ 5050
Impreza WRX STi	2.0L H4 F/I	69-8001TWR [2]	15.9 @ 5050
		69-8001TS [2]	15.9 @ 5050
Impreza WRX STi	2.5L H4 F/I	69-8001TWR [1]	15.9 @ 5050
		69-8001TS [1]	15.9 @ 5050
Legacy GT	2.5L H4 F/I	69-8003TFK [1]	14.9 @ 4700
2006 SUBARU			
Forester	2.5L H4 F/I - Turbo	69-8002TS [2]	17.7 @ 5484
Impreza WRX	2.0L H4 F/I	69-8001TWR [2]	15.9 @ 5050
		69-8001TS [2]	15.9 @ 5050
Impreza WRX	2.5L H4 F/I	69-8001TWR [1]	15.9 @ 5050
		69-8001TS [1]	15.9 @ 5050
Impreza WRX STi	2.0L H4 F/I	69-8001TWR [2]	15.9 @ 5050
		69-8001TS [2]	15.9 @ 5050
Impreza WRX STi	2.5L H4 F/I	69-8001TWR [1]	15.9 @ 5050
		69-8001TS [1]	15.9 @ 5050
Legacy GT	2.5L H4 F/I	69-8003TFK [1]	14.9 @ 4700
2005 SUBARU			
Forester	2.5L H4 F/I - Turbo	69-8002TS [1]	17.7 @ 5484
Impreza WRX	2.0L H4 F/I	69-8001TWR [1]	15.9 @ 5050
		69-8001TS [1]	15.9 @ 5050
Impreza WRX STi	2.0L H4 F/I	69-8001TWR [2]	15.9 @ 5050
		69-8001TS [2]	15.9 @ 5050
Impreza WRX STi	2.5L H4 F/I	69-8001TWR [1]	15.9 @ 5050
		69-8001TS [1]	15.9 @ 5050
Legacy GT	2.5L H4 F/I	69-8003TFK [1]	14.9 @ 4700
2004 SUBARU			
Forester	2.5L H4 F/I - Turbo	69-8002TS [1]	17.7 @ 5484
Impreza WRX	2.0L H4 F/I	69-8001TWR [1]	15.9 @ 5050
		69-8001TS [1]	15.9 @ 5050
Impreza WRX STi	2.0L H4 F/I	69-8001TWR [2]	15.9 @ 5050
		69-8001TS [2]	15.9 @ 5050
Impreza WRX STi	2.5L H4 F/I	69-8001TWR [1]	15.9 @ 5050
		69-8001TS [1]	15.9 @ 5050
2003 SUBARU			
Impreza WRX	2.0L H4 F/I	69-8001TWR [1]	15.9 @ 5050
		69-8001TS [1]	15.9 @ 5050
Impreza WRX STi	2.0L H4 F/I	69-8001TWR [2]	15.9 @ 5050
		69-8001TS [2]	15.9 @ 5050
2002 SUBARU			
Impreza WRX	2.0L H4 F/I	69-8001TWR [1]	15.9 @ 5050
		69-8001TS [1]	15.9 @ 5050
Impreza WRX STi	2.0L H4 F/I	69-8001TWR [2]	15.9 @ 5050
		69-8001TS [2]	15.9 @ 5050
2001 SUBARU			
Impreza WRX	2.0L H4 F/I	69-8001TWR [2]	15.9 @ 5050
		69-8001TS [2]	15.9 @ 5050
2000 SUBARU			
Impreza WRX	2.0L H4 F/I	69-8001TWR [2]	15.9 @ 5050

1) Street legal in all US states. 2) Street legal in most states, but not legal for use in California or other states with similar emission control regulations.
* Estimated horsepower gains are based on specific or similar vehicle dyno tests. Results will vary. See Page 479 for more information.
Partial Listing - Complete List of Vehicles and Applications at knfilters.com. See page 5 for information on intake tube materials/colors.

Vehicle	Engine Type	Intake Kit	Estimated Horsepower*
2000 SUBARU			
Impreza WRX	2.0L H4 F/I	69-8001TS [2]	15.9 @ 5050
2008 SUZUKI			
LTR450 QuadRacer	450	63-1128 [2]	2.7 @ 6600
2007 SUZUKI			
LTR450 QuadRacer	450	63-1128 [2]	2.7 @ 6600
2006 SUZUKI			
LTR450 QuadRacer	450	63-1128 [2]	2.7 @ 6600
2003 SUZUKI			
Aerio	2.0L L4 F/I	69-8400TS [1]	7.3 @ 5900
		69-8400TR [1]	7.3 @ 5900
2002 SUZUKI			
Aerio	2.0L L4 F/I	69-8400TS [1]	7.3 @ 5900
		69-8400TR [1]	7.3 @ 5900
2013 TOYOTA			
Corolla	1.8L L4 F/I	69-8757TTK [2]	6.4 @ 5323
Tacoma	2.7L L4 F/I	77-9026KP [2]	5.7 @ 4600
		63-9026 [2]	7.4 @ 4600
Tacoma	4.0L V6 F/I	77-9037KP [2]	
		63-9037 [2]	
Tundra	5.7L V8 F/I	77-9036KP [2]	7.2 @ 5490
		63-9036 [2]	9.3 @ 5497
Venza	3.5L V6 F/I	69-8611TS [2]	11.7 @ 4800
2012 TOYOTA			
4 Runner	4.0L V6 F/I	77-9034KP [2]	13.6 @ 5000
		63-9034 [2]	12.2 @ 4600
Camry	3.5L V6 F/I	69-8618TS [2]	7.1 @ 5914
Corolla	1.8L L4 F/I	69-8757TTK [2]	6.4 @ 5323
FJ Cruiser	4.0L V6 F/I	77-9034KP [2]	13.6 @ 5000
		63-9034 [2]	12.2 @ 4600
Tacoma	2.7L L4 F/I	77-9026KP [2]	5.7 @ 4600
		63-9026 [2]	7.4 @ 4600
Tacoma	4.0L V6 F/I	77-9037KP [2]	
		63-9037 [2]	
Tundra	4.6L V8 F/I	77-9035KP [2]	10.2 @ 5280
		63-9035 [2]	13.8 @ 5517
Tundra	5.7L V8 F/I	77-9036KP [2]	7.2 @ 5490
		63-9036 [2]	9.3 @ 5497
Venza	3.5L V6 F/I	69-8611TS [2]	11.7 @ 4800
2011 TOYOTA			
4 Runner	4.0L V6 F/I	77-9034KP [2]	13.6 @ 5000
		63-9034 [2]	12.2 @ 4600
Camry	2.5L L4 F/I	69-8617TTK [2]	4.8 @ 5654
Camry	3.5L V6 F/I	69-8611TS [2]	11.7 @ 4800
Corolla	1.8L L4 F/I	69-8757TTK [2]	6.4 @ 5323
FJ Cruiser	4.0L V6 F/I	77-9034KP [2]	13.6 @ 5000
		63-9034 [2]	12.3 @ 4862
Sequoia	5.7L V8 F/I	77-9031-1KP [2]	13.4 @ 5142
		63-9031-1 [2]	13.1 @ 5282
Tacoma	2.7L L4 F/I	77-9026KP [2]	5.7 @ 4600
		63-9026 [2]	7.4 @ 4600
Tacoma	4.0L V6 F/I	77-9025KP [2]	10.2 @ 5174
		63-9025 [2]	10.3 @ 4979
Tundra	4.6L V8 F/I	77-9035KP [2]	10.2 @ 5280
		63-9035 [2]	13.8 @ 5517
Tundra	5.7L V8 F/I	77-9031-1KP [2]	13.4 @ 5142
		63-9031-1 [2]	13.1 @ 5282
2011 TOYOTA			
Venza	3.5L V6 F/I	69-8611TS [2]	11.7 @ 4800
Yaris	1.5L L4 F/I	69-8612TFK [2]	4.6 @ 5089
2010 TOYOTA			
4 Runner	4.0L V6 F/I	77-9034KP [2]	13.6 @ 5000
		63-9034 [2]	12.2 @ 4600
Camry	2.5L L4 F/I	69-8617TTK [2]	4.8 @ 5654
Camry	3.5L V6 F/I	69-8611TS [2]	11.7 @ 4800
Corolla	1.8L L4 F/I	69-8757TTK [2]	6.4 @ 5323
FJ Cruiser	4.0L V6 F/I	77-9034KP [2]	13.6 @ 5000
		63-9034 [2]	12.2 @ 4600
Sequoia	5.7L V8 F/I	77-9031-1KP [2]	13.4 @ 5142
		63-9031-1 [2]	13.1 @ 5282
Tacoma	2.7L L4 F/I	77-9026KP [2]	5.7 @ 4600
		63-9026 [2]	7.4 @ 4600
Tacoma	4.0L V6 F/I	77-9025KP [2]	10.2 @ 5174
		63-9025 [2]	10.3 @ 4979
Tundra	4.0L V6 F/I	77-9033KP [2]	9.7 @ 4743
		63-9033 [2]	9.7 @ 4742
Tundra	4.6L V8 F/I	77-9035KP [2]	10.2 @ 5280
		63-9035 [2]	13.8 @ 5517
Tundra	5.7L V8 F/I	77-9031-1KP [2]	13.4 @ 5142
		63-9031-1 [2]	13.1 @ 5282
Venza	3.5L V6 F/I	69-8611TS [2]	11.7 @ 4800
Yaris	1.5L L4 F/I	69-8612TFK [2]	4.6 @ 5089
Yaris	1.8L L4 F/I	69-8615TS [2]	5.5 @ 5300
2009 TOYOTA			
Camry	2.4L L4 F/I	69-8610TTK [2]	14.3 @ 5639
Camry	3.5L V6 F/I	69-8611TS [2]	11.7 @ 4800
Corolla	1.8L L4 F/I	69-8757TTK [2]	6.4 @ 5323
FJ Cruiser	4.0L V6 F/I	77-9030KP [2]	8.2 @ 4785
		63-9030 [2]	11.9 @ 4785
Matrix	2.4L L4 F/I	69-8613TS [2]	9.1 @ 5026
Sequoia	4.7L V8 F/I	77-9032-1KP [2]	9.0 @ 4717
		63-9032-1 [2]	8.1 @ 4717
Sequoia	5.7L V8 F/I	77-9031-1KP [2]	13.4 @ 5142
		63-9031-1 [2]	13.1 @ 5282
Tacoma	2.7L L4 F/I	77-9026KP [2]	5.7 @ 4600
		63-9026 [2]	7.4 @ 4600
Tacoma	4.0L V6 F/I	77-9025KP [2]	10.2 @ 5174
		63-9025 [2]	10.3 @ 4979
Tundra	4.0L V6 F/I	77-9033KP [2]	9.7 @ 4743
		63-9033 [2]	9.7 @ 4742
Tundra	4.7L V8 F/I	77-9032-1KP [2]	9.0 @ 4717
		63-9032-1 [2]	8.1 @ 4717
Tundra	5.7L V8 F/I	77-9031-1KP [2]	13.4 @ 5142
		63-9031-1 [2]	13.1 @ 5282
Venza	3.5L V6 F/I	69-8611TS [2]	11.7 @ 4800
Yaris	1.5L L4 F/I	69-8612TFK [2]	4.6 @ 5089
Yaris	1.8L L4 F/I	69-8615TS [2]	5.5 @ 5300
2008 TOYOTA			
4 Runner	4.0L V6 F/I	77-9023KP [2]	7.9 @ 5189
		63-9023 [2]	9.2 @ 5388
4 Runner	4.7L V8 F/I	77-9029KP [2]	7.4 @ 5270
		63-9029 [2]	12.3 @ 5270
Camry	2.4L L4 F/I	69-8610TTK [2]	14.3 @ 5639
Camry	3.5L V6 F/I	69-8611TS [2]	11.7 @ 4800
FJ Cruiser	4.0L V6 F/I	77-9030KP [2]	8.2 @ 4785
		63-9030 [2]	11.9 @ 4785

1) Street legal in all US states. 2) Street legal in most states, but not legal for use in California or other states with similar emission control regulations.
* Estimated horsepower gains are based on specific or similar vehicle dyno tests. Results will vary. See Page 479 for more information.
Partial Listing - Complete List of Vehicles and Applications at knfilters.com. See page 5 for information on intake tube materials/colors.

Vehicle	Engine Type	Intake Kit	Estimated Horsepower*
2008 TOYOTA			
Sequoia	4.7L V8 F/I	77-9032-1KP [2]	9.0 @ 4717
		63-9032-1 [2]	8.1 @ 4717
Sequoia	5.7L V8 F/I	77-9031-1KP [2]	13.4 @ 5142
		63-9031-1 [2]	13.1 @ 5282
Tacoma	2.7L L4 F/I	77-9026KP [2]	5.7 @ 4600
		63-9026 [2]	7.4 @ 4600
Tacoma	4.0L V6 F/I	77-9025KP [2]	10.2 @ 5174
		63-9025 [2]	10.3 @ 4979
Tundra	4.0L V6 F/I	77-9033KP [2]	9.7 @ 4743
		63-9033 [2]	9.7 @ 4742
Tundra	4.7L V8 F/I	77-9032-1KP [2]	9.0 @ 4717
		63-9032-1 [2]	8.1 @ 4717
Tundra	5.7L V8 F/I	77-9031-1KP [2]	13.4 @ 5142
		63-9031-1 [2]	13.1 @ 5282
Yaris	1.5L L4 F/I	69-8612TFK [2]	4.6 @ 5089
Yaris	1.8L L4 F/I	69-8615TS [2]	5.5 @ 5300
2007 TOYOTA			
4 Runner	4.0L V6 F/I	77-9023KP [2]	7.9 @ 5189
		63-9023 [2]	9.2 @ 5388
4 Runner	4.7L V8 F/I	77-9029KP [2]	7.4 @ 5270
		63-9029 [2]	12.3 @ 5270
Camry	2.4L L4 F/I	69-8610TTK [2]	14.3 @ 5639
Camry	3.5L V6 F/I	69-8611TS [2]	11.7 @ 4800
Corolla	1.4L L4 F/I	69-8754TR [2]	
		69-8754TP [2]	
Corolla	1.6L L4 F/I	69-8754TR [2]	
		69-8754TP [2]	
Corolla	1.8L L4 F/I - Non-US	69-8751TR [2]	
		69-8751TP [2]	
FJ Cruiser	4.0L V6 F/I	77-9030KP [2]	8.2 @ 4785
		63-9030 [2]	11.9 @ 4785
Sequoia	4.7L V8 F/I	77-9027KP [2]	8.7 @ 5465
		63-9027 [2]	9.5 @ 5472
Tacoma	2.7L L4 F/I	77-9026KP [2]	5.7 @ 4600
		63-9026 [2]	7.4 @ 4600
Tacoma	4.0L V6 F/I	77-9025KP [2]	10.2 @ 5174
		63-9025 [2]	10.3 @ 4979
Tundra	4.0L V6 F/I	77-9033KP [2]	9.7 @ 4743
		63-9033 [2]	9.7 @ 4742
Tundra	4.7L V8 F/I	77-9032-1KP [2]	9.0 @ 4717
		63-9032-1 [2]	8.1 @ 4717
Tundra	5.7L V8 F/I	77-9031-1KP [2]	13.4 @ 5142
		63-9031-1 [2]	13.1 @ 5282
Yaris	1.5L L4 F/I	69-8612TFK [2]	4.6 @ 5089
Yaris	1.8L L4 F/I	69-8615TS [2]	5.5 @ 5300
2006 TOYOTA			
4 Runner	4.0L V6 F/I	77-9023KP [2]	7.9 @ 5189
		63-9023 [2]	9.2 @ 5388
4 Runner	4.7L V8 F/I	77-9029KP [2]	7.4 @ 5270
		63-9029 [2]	12.3 @ 5270
Camry	2.4L L4 F/I	69-8609TTK [2]	6.4 @ 5600
Celica	1.8L L4 F/I - 143BHP	69-8750TR [2]	
Celica	1.8L L4 F/I - 192BHP	69-8752TR [2]	
Corolla	1.4L L4 F/I	69-8754TR [2]	
		69-8754TP [2]	
Corolla	1.6L L4 F/I	69-8754TR [2]	
		69-8754TP [2]	
Corolla	1.8L L4 F/I - Non-US	69-8751TR [2]	
Corolla	1.8L L4 F/I - Non-US	69-8751TP [2]	
Matrix XRS	1.8L L4 F/I	69-8601TR [2]	11.9 @ 7700
		69-8601TP [2]	11.9 @ 7700
Sequoia	4.7L V8 F/I	77-9027KP [2]	8.7 @ 5465
		63-9027 [2]	9.5 @ 5472
		57-9027 [1]	9.6 @ 4306
Solara	2.4L L4 F/I	69-8609TTK [2]	6.4 @ 5600
Tacoma	2.7L L4 F/I	77-9026KP [2]	5.7 @ 4600
		63-9026 [2]	7.4 @ 4600
Tacoma	4.0L V6 F/I	77-9025KP [2]	10.2 @ 5174
		63-9025 [2]	10.3 @ 4979
Tundra	4.0L V6 F/I	77-9028KP [2]	8.3 @ 5159
		63-9028 [2]	11.4 @ 5159
Tundra	4.7L V8 F/I	77-9027KP [2]	8.7 @ 5465
		63-9027 [2]	9.5 @ 5472
		57-9027 [1]	9.6 @ 4306
Yaris	1.5L L4 F/I	69-8612TFK [2]	4.6 @ 5089
2005 TOYOTA			
4 Runner	4.0L V6 F/I	77-9023KP [2]	7.9 @ 5189
		63-9023 [2]	9.2 @ 5388
4 Runner	4.7L V8 F/I	77-9029KP [2]	7.4 @ 5270
		63-9029 [2]	12.3 @ 5270
Camry	2.4L L4 F/I	69-8609TTK [2]	6.4 @ 5600
Celica	1.8L L4 F/I - 143BHP	69-8750TS [2]	
		69-8750TR [2]	
Celica	1.8L L4 F/I - 192BHP	69-8752TS [2]	
		69-8752TR [2]	
Corolla	1.4L L4 F/I	69-8754TR [2]	
		69-8754TP [2]	
Corolla	1.6L L4 F/I	69-8754TR [2]	
		69-8754TP [2]	
Corolla	1.8L L4 F/I - Non-US	69-8751TR [2]	
		69-8751TP [2]	
Land Cruiser	4.7L V8 F/I	57-9021 [1]	8.5 @ 4138
Matrix XRS	1.8L L4 F/I	69-8601TR [2]	11.9 @ 7700
		69-8601TP [2]	11.9 @ 7700
Sequoia	4.7L V8 F/I	77-9027KP [2]	8.7 @ 5465
		63-9027 [2]	9.5 @ 5472
		57-9027 [1]	9.6 @ 4306
Solara	2.4L L4 F/I	69-8609TTK [2]	6.4 @ 5600
Tacoma	2.7L L4 F/I	77-9026KP [2]	5.7 @ 4600
		63-9026 [2]	7.4 @ 4600
Tacoma	4.0L V6 F/I	77-9025KP [2]	10.2 @ 5174
		63-9025 [2]	10.3 @ 4979
Tundra	4.0L V6 F/I	77-9028KP [2]	8.3 @ 5159
		63-9028 [2]	11.4 @ 5159
Tundra	4.7L V8 F/I	77-9027KP [2]	8.7 @ 5465
		63-9027 [2]	9.5 @ 5472
		57-9027 [1]	9.6 @ 4306
2004 TOYOTA			
4 Runner	4.0L V6 F/I	77-9023KP [2]	7.9 @ 5189
		63-9023 [2]	9.2 @ 5388
4 Runner	4.7L V8 F/I	77-9022KP [2]	12.8 @ 5007
		63-9022 [2]	13.5 @ 5011
Camry	2.4L L4 F/I	69-8609TTK [2]	6.4 @ 5600
Celica	1.8L L4 F/I - 143BHP	69-8750TS [2]	
		69-8750TR [2]	
Celica	1.8L L4 F/I - 192BHP	69-8752TS [2]	

1) Street legal in all US states. 2) Street legal in most states, but not legal for use in California or other states with similar emission control regulations.
* Estimated horsepower gains are based on specific or similar vehicle dyno tests. Results will vary. See Page 479 for more information.
Partial Listing - Complete List of Vehicles and Applications at knfilters.com. See page 5 for information on intake tube materials/colors.

Vehicle	Engine Type	Intake Kit	Estimated Horsepower*
2004 TOYOTA			
Celica	1.8L L4 F/I - 192BHP	69-8752TR [2]	
Celica GT	1.8L L4 F/I	69-8520TS [1]	5.9 @ 6400
		69-8520TR [1]	5.9 @ 6400
Celica GTS	1.8L L4 F/I	69-8522TS [1]	7.5 @ 6362
Corolla	1.4L L4 F/I	69-8754TR [2]	
		69-8754TP [2]	
Corolla	1.6L L4 F/I	69-8754TR [2]	
		69-8754TP [2]	
Corolla	1.8L L4 F/I - Non-US	69-8751TR [2]	
		69-8751TP [2]	
Corolla	1.8L L4 F/I - US	69-8600TR [1]	8.7 @ 6250
		69-8600TP [1]	8.7 @ 6250
Land Cruiser	4.7L V8 F/I	57-9021 [1]	8.5 @ 4138
Matrix XR	1.8L L4 F/I	69-8600TR [1]	8.7 @ 6250
		69-8600TP [1]	8.7 @ 6250
Matrix XRS	1.8L L4 F/I	69-8601TR [1]	11.9 @ 7700
		69-8601TP [1]	11.9 @ 7700
Sequoia	4.7L V8 F/I	77-9020KP [1]	10.1 @ 5022
		57-9020 [1]	13.7 @ 4842
Solara	2.4L L4 F/I	69-8609TTK [2]	6.4 @ 5600
Tacoma	2.4L L4 F/I	77-9016KP [1]	5.4 @ 4365
		57-9016-1 [1]	6.2 @ 4200
Tacoma	2.7L L4 F/I	77-9016KP [1]	5.4 @ 4365
		57-9016-1 [1]	6.2 @ 4200
Tacoma	3.4L V6 F/I	77-9015KP [1]	9.3 @ 4620
		57-9015-1 [1]	9.5 @ 4842
Tundra	3.4L V6 F/I	63-1043 [2]	5.0 @ 4752
Tundra	4.7L V8 F/I	77-9020KP [2]	10.1 @ 5022
		63-1058 [2]	13.7 @ 4842
Yaris	1.5L L4 F/I - 105BHP	69-8756TP [2]	
		69-8756TB [2]	
2003 TOYOTA			
4 Runner	4.0L V6 F/I	77-9023KP [2]	7.9 @ 5189
		63-9023 [2]	9.2 @ 5388
4 Runner	4.7L V8 F/I	77-9022KP [2]	12.8 @ 5007
		63-9022 [2]	13.5 @ 5011
Camry	2.4L L4 F/I	69-8609TTK [1]	6.4 @ 5600
Celica	1.8L L4 F/I - 143BHP	69-8750TS [2]	
		69-8750TR [2]	
Celica	1.8L L4 F/I - 192BHP	69-8752TS [2]	
		69-8752TR [2]	
Celica GT	1.8L L4 F/I	69-8520TS [1]	5.9 @ 6400
		69-8520TR [1]	5.9 @ 6400
Celica GTS	1.8L L4 F/I	69-8522TS [1]	7.5 @ 6362
Corolla	1.4L L4 F/I	69-8754TR [2]	
		69-8754TP [2]	
Corolla	1.6L L4 F/I	69-8754TR [2]	
		69-8754TP [2]	
Corolla	1.8L L4 F/I - Non-US	69-8751TR [2]	
		69-8751TP [2]	
Corolla	1.8L L4 F/I - US	69-8600TR [1]	8.7 @ 6250
		69-8600TP [1]	8.7 @ 6250
Land Cruiser	4.7L V8 F/I	57-9021 [1]	8.5 @ 4138
Matrix XR	1.8L L4 F/I	69-8600TR [1]	8.7 @ 6250
		69-8600TP [1]	8.7 @ 6250
Matrix XRS	1.8L L4 F/I	69-8601TR [1]	11.9 @ 7700
		69-8601TP [1]	11.9 @ 7700
Sequoia	4.7L V8 F/I	77-9020KP [1]	10.1 @ 5022
2003 TOYOTA			
Sequoia	4.7L V8 F/I	57-9020 [1]	13.7 @ 4842
Solara	2.4L L4 F/I	69-8609TTK [1]	6.4 @ 5600
Tacoma	2.4L L4 F/I	77-9016KP [1]	5.4 @ 4365
		57-9016-1 [1]	6.2 @ 4200
Tacoma	2.7L L4 F/I	77-9016KP [1]	5.4 @ 4365
		57-9016-1 [1]	6.2 @ 4200
Tacoma	3.4L V6 F/I	77-9015KP [1]	9.3 @ 4620
		57-9015-1 [1]	9.5 @ 4842
Tundra	3.4L V6 F/I	63-1043 [2]	5.0 @ 4752
Tundra	4.7L V8 F/I	77-9020KP [2]	10.1 @ 5022
		63-1058 [2]	13.7 @ 4842
2002 TOYOTA			
4 Runner	3.4L V6 F/I	77-9015KP [1]	9.3 @ 4620
		57-9015-1 [1]	9.5 @ 4842
Camry	2.4L L4 F/I	69-8609TTK [1]	6.4 @ 5600
Celica	1.8L L4 F/I - 143BHP	69-8750TS [2]	
		69-8750TR [2]	
Celica	1.8L L4 F/I - 192BHP	69-8752TS [2]	
		69-8752TR [2]	
Celica GT	1.8L L4 F/I	69-8520TS [1]	5.9 @ 6400
		69-8520TR [1]	5.9 @ 6400
Celica GTS	1.8L L4 F/I	69-8522TS [1]	7.5 @ 6362
Corolla	1.4L L4 F/I	69-8754TR [2]	
		69-8754TP [2]	
Corolla	1.6L L4 F/I	69-8754TR [2]	
		69-8754TP [2]	
Corolla	1.8L L4 F/I	69-8600TR [1]	8.7 @ 6250
		69-8600TP [1]	8.7 @ 6250
Corolla	1.8L L4 F/I - Non-US	69-8751TR [2]	
		69-8751TP [2]	
Land Cruiser	4.7L V8 F/I	57-9021 [1]	8.5 @ 4138
Sequoia	4.7L V8 F/I	77-9020KP [1]	10.1 @ 5022
		57-9020 [1]	13.7 @ 4842
Solara	2.4L L4 F/I	69-8609TTK [1]	6.4 @ 5600
Tacoma	2.4L L4 F/I	77-9016KP [1]	5.4 @ 4365
		57-9016-1 [1]	6.2 @ 4200
Tacoma	2.7L L4 F/I	77-9016KP [1]	5.4 @ 4365
		57-9016-1 [1]	6.2 @ 4200
Tacoma	3.4L V6 F/I	77-9015KP [1]	9.3 @ 4620
		57-9015-1 [1]	9.5 @ 4842
Tundra	3.4L V6 F/I	57-9019 [1]	5.0 @ 4752
Tundra	4.7L V8 F/I	77-9020KP [1]	10.1 @ 5022
		57-9020 [1]	13.7 @ 4842
2001 TOYOTA			
4 Runner	3.4L V6 F/I	77-9015KP [1]	9.3 @ 4620
		57-9015-1 [1]	9.5 @ 4842
Celica	1.8L L4 F/I - 143BHP	69-8750TS [2]	
		69-8750TR [2]	
Celica	1.8L L4 F/I - 192BHP	69-8752TS [2]	
		69-8752TR [2]	
Celica GT	1.8L L4 F/I	69-8520TS [1]	5.9 @ 6400
		69-8520TR [1]	5.9 @ 6400
Celica GTS	1.8L L4 F/I	69-8522TS [1]	7.5 @ 6362
Corolla	1.6L L4 F/I	69-8754TR [2]	
		69-8754TP [2]	
Corolla	1.8L L4 F/I - Non-US	69-8751TR [2]	
		69-8751TP [2]	
Land Cruiser	4.7L V8 F/I	57-9021 [1]	8.5 @ 4138

1) Street legal in all US states. 2) Street legal in most states, but not legal for use in California or other states with similar emission control regulations.
* Estimated horsepower gains are based on specific or similar vehicle dyno tests. Results will vary. See Page 479 for more information.
Partial Listing - Complete List of Vehicles and Applications at knfilters.com. See page 5 for information on intake tube materials/colors.

AIR INTAKE SYSTEMS

Vehicle	Engine Type	Intake Kit	Estimated Horsepower*
2001 TOYOTA			
Sequoia	4.7L V8 F/I	77-9020KP [1]	10.1 @ 5022
		57-9017 [1]	11.7 @ 5108
Tacoma	2.4L L4 F/I	77-9016KP [1]	5.4 @ 4365
		57-9016-1 [1]	6.2 @ 4200
Tacoma	2.7L L4 F/I	77-9016KP [1]	5.4 @ 4365
		57-9016-1 [1]	6.2 @ 4200
Tacoma	3.4L V6 F/I	77-9015KP [1]	9.3 @ 4620
		57-9015-1 [1]	9.5 @ 4842
Tundra	3.4L V6 F/I	57-9019 [1]	5.0 @ 4752
Tundra	4.7L V8 F/I	77-9020KP [1]	10.1 @ 5022
		57-9014-1 [1]	14.2 @ 5027
2000 TOYOTA			
4 Runner	2.7L L4 F/I	77-9016KP [1]	5.4 @ 4365
		57-9016-1 [1]	6.2 @ 4200
4 Runner	3.4L V6 F/I	77-9015KP [1]	9.3 @ 4620
		57-9015-1 [1]	9.5 @ 4842
Celica	1.8L L4 F/I - 143BHP	69-8750TS [2]	
		69-8750TR [2]	
Celica	1.8L L4 F/I - 192BHP	69-8752TS [2]	
		69-8752TR [2]	
Celica GT	1.8L L4 F/I	69-8520TS [1]	5.9 @ 6400
		69-8520TR [1]	5.9 @ 6400
Celica GTS	1.8L L4 F/I	69-8522TS [1]	7.5 @ 6362
Land Cruiser	4.7L V8 F/I	57-9021 [1]	8.5 @ 4138
Tacoma	2.4L L4 F/I	77-9016KP [1]	5.4 @ 4365
		57-9016-1 [1]	6.2 @ 4200
Tacoma	2.7L L4 F/I	77-9016KP [1]	5.4 @ 4365
		57-9016-1 [1]	6.2 @ 4200
Tacoma	3.4L V6 F/I	77-9015KP [1]	9.3 @ 4620
		57-9015-1 [1]	9.5 @ 4842
Tundra	3.4L V6 F/I	57-9019 [1]	5.0 @ 4752
Tundra	4.7L V8 F/I	77-9020KP [1]	10.1 @ 5022
		57-9014-1 [1]	14.2 @ 5027
1999 TOYOTA			
4 Runner	2.7L L4 F/I	57-9012 [1]	5.7 @ 4727
4 Runner	3.4L V6 F/I	77-9015KP [1]	9.3 @ 4620
		57-9015-1 [1]	9.5 @ 4842
Celica	1.8L L4 F/I - 143BHP	69-8750TS [2]	
		69-8750TR [2]	
Land Cruiser	4.7L V8 F/I	57-9021 [1]	8.5 @ 4138
Tacoma	2.4L L4 F/I	57-9012 [1]	5.7 @ 4727
Tacoma	2.7L L4 F/I	57-9012 [1]	5.7 @ 4727
Tacoma	3.4L V6 F/I	77-9015KP [1]	9.3 @ 4620
		57-9015-1 [1]	9.5 @ 4842
1998 TOYOTA			
4 Runner	2.7L L4 F/I	57-9012 [1]	5.7 @ 4727
4 Runner	3.4L V6 F/I	57-9013 [1]	6.2 @ 4848
T100	3.4L V6 F/I	57-9024 [1]	9.1 @ 4847
Tacoma	2.4L L4 F/I	57-9012 [1]	5.7 @ 4727
Tacoma	2.7L L4 F/I	57-9012 [1]	5.7 @ 4727
Tacoma	3.4L V6 F/I	57-9013 [1]	6.2 @ 4848
1997 TOYOTA			
4 Runner	2.7L L4 F/I	57-9012 [1]	5.7 @ 4727
4 Runner	3.4L V6 F/I	57-9013 [1]	6.2 @ 4848
T100	3.4L V6 F/I	57-9024 [1]	9.1 @ 4847
Tacoma	2.4L L4 F/I	57-9012 [1]	5.7 @ 4727
Tacoma	2.7L L4 F/I	57-9012 [1]	5.7 @ 4727
1997 TOYOTA			
Tacoma	3.4L V6 F/I	57-9013 [1]	6.2 @ 4848
1996 TOYOTA			
4 Runner	2.7L L4 F/I	57-9012 [1]	5.7 @ 4727
4 Runner	3.4L V6 F/I	57-9013 [1]	6.2 @ 4848
T100	3.4L V6 F/I	57-9024 [1]	9.1 @ 4847
Tacoma	2.4L L4 F/I	57-9012 [1]	5.7 @ 4727
Tacoma	2.7L L4 F/I	57-9012 [1]	5.7 @ 4727
Tacoma	3.4L V6 F/I	57-9013 [1]	6.2 @ 4848
1995 TOYOTA			
4 Runner	3.0L V6 F/I	57-9006 [1]	3.3 @ 4405
Pickup	2.4L L4 F/I	57-9008 [1]	5.1 @ 4700
Pickup	3.0L V6 F/I	57-9006 [1]	3.3 @ 4405
Supra	3.0L L6 F/I - Turbo	57-9004 [1]	8.3 @ 5306
T100	3.4L V6 F/I	57-9024 [1]	9.1 @ 4847
Tacoma	2.4L L4 F/I	57-9012 [1]	5.7 @ 4727
Tacoma	2.7L L4 F/I	57-9012 [1]	5.7 @ 4727
Tacoma	3.4L V6 F/I	57-9013 [1]	6.2 @ 4848
1994 TOYOTA			
4 Runner	2.4L L4 F/I	57-9008 [1]	5.1 @ 4700
4 Runner	3.0L V6 F/I	57-9006 [1]	3.3 @ 4405
Pickup	2.4L L4 F/I	57-9008 [1]	5.1 @ 4700
Pickup	3.0L V6 F/I	57-9006 [1]	3.3 @ 4405
Supra	3.0L L6 F/I - Turbo	57-9004 [1]	8.3 @ 5306
1993 TOYOTA			
4 Runner	2.4L L4 F/I	57-9008 [1]	5.1 @ 4700
4 Runner	3.0L V6 F/I	57-9006 [1]	3.3 @ 4405
MR2	2.0L L4 F/I	57-9001 [1]	6.1 @ 5500
Pickup	2.4L L4 F/I	57-9008 [1]	5.1 @ 4700
Pickup	3.0L V6 F/I	57-9006 [1]	3.3 @ 4405
Supra	3.0L L6 F/I - Turbo	57-9004 [1]	8.3 @ 5306
1992 TOYOTA			
4 Runner	2.4L L4 F/I	57-9008 [1]	5.1 @ 4700
4 Runner	3.0L V6 F/I	57-9006 [1]	3.3 @ 4405
MR2	2.0L L4 F/I	57-9001 [1]	6.1 @ 5500
Pickup	2.4L L4 F/I	57-9008 [1]	5.1 @ 4700
Pickup	3.0L V6 F/I	57-9006 [1]	3.3 @ 4405
Supra	3.0L L6 F/I - exc. Turbo	57-9005 [1]	
Supra	3.0L L6 F/I - Turbo	57-9004 [1]	8.3 @ 5306
1991 TOYOTA			
4 Runner	2.4L L4 F/I	57-9008 [1]	5.1 @ 4700
4 Runner	3.0L V6 F/I	57-9006 [1]	3.3 @ 4405
MR2	2.0L L4 F/I	57-9001 [1]	6.1 @ 5500
Pickup	2.4L L4 F/I	57-9008 [1]	5.1 @ 4700
Pickup	3.0L V6 F/I	57-9006 [1]	3.3 @ 4405
Supra	3.0L L6 F/I - exc. Turbo	57-9005 [1]	
Supra	3.0L L6 F/I - Turbo	57-9004 [1]	8.3 @ 5306
1990 TOYOTA			
4 Runner	2.4L L4 F/I	57-9008 [1]	5.1 @ 4700
4 Runner	3.0L V6 F/I	57-9006 [1]	3.3 @ 4405
Pickup	2.4L L4 F/I	57-9008 [1]	5.1 @ 4700
Pickup	3.0L V6 F/I	57-9006 [1]	3.3 @ 4405
Supra	3.0L L6 F/I - exc. Turbo	57-9005 [1]	
Supra	3.0L L6 F/I - Turbo	57-9004 [1]	8.3 @ 5306
1989 TOYOTA			
4 Runner	2.4L L4 F/I	57-9008 [1]	5.1 @ 4700
4 Runner	3.0L V6 F/I	57-9006 [1]	3.3 @ 4405

1) Street legal in all US states. 2) Street legal in most states, but not legal for use in California or other states with similar emission control regulations.
* Estimated horsepower gains are based on specific or similar vehicle dyno tests. Results will vary. See Page 479 for more information.
Partial Listing - Complete List of Vehicles and Applications at knfilters.com. See page 5 for information on intake tube materials/colors.

Vehicle	Engine Type	Intake Kit	Estimated Horsepower*
1989 TOYOTA			
Pickup	2.4L L4 F/I	57-9008 [1]	5.1 @ 4700
Pickup	3.0L V6 F/I	57-9006 [1]	3.3 @ 4405
Supra	3.0L L6 F/I - exc. Turbo	57-9005 [1]	
Supra	3.0L L6 F/I - Turbo	57-9004 [1]	8.3 @ 5306
1988 TOYOTA			
4 Runner	2.4L L4 F/I	57-9008 [1]	5.1 @ 4700
4 Runner	3.0L V6 F/I	57-9006 [1]	3.3 @ 4405
Pickup	2.4L L4 F/I	57-9008 [1]	5.1 @ 4700
Pickup	3.0L V6 F/I	57-9006 [1]	3.3 @ 4405
Supra	3.0L L6 F/I - exc. Turbo	57-9005 [1]	
Supra	3.0L L6 F/I - Turbo	57-9004 [1]	8.3 @ 5306
1987 TOYOTA			
Corolla	1.6L L4 F/I	57-9000 [1]	
Corolla Sport GTS	1.6L L4 F/I	57-9000 [1]	
Supra	3.0L L6 F/I - exc. Turbo	57-9005 [1]	
Supra	3.0L L6 F/I - Turbo	57-9004 [1]	8.3 @ 5306
1986 TOYOTA			
Corolla	1.6L L4 F/I	57-9000 [1]	
Supra	3.0L L6 F/I	57-9005 [1]	
1985 TOYOTA			
Corolla	1.6L L4 F/I	57-9000 [1]	
2013 VOLKSWAGEN			
CC	2.0L L4 DSL	69-9756TFK [2]	
CC	2.0L L4 F/I - Non-US	69-9756TFK [2]	
CC	2.0L L4 F/I - US	69-9504TTK [2]	9.2 @ 4853
Golf Plus	2.0L L4 DSL	69-9756TFK [2]	
Golf VI	2.0L L4 DSL	69-9756TFK [2]	
Golf VI	2.0L L4 F/I - 211BHP	69-9756TFK [2]	
GTI	2.0L L4 F/I - US	69-9504TTK [2]	9.2 @ 4853
Jetta V	2.0L L4 DSL	69-9756TFK [2]	
Jetta V	2.0L L4 F/I	69-9756TFK [2]	
Passat	2.0L L4 DSL - Non-US	69-9756TFK [2]	
Passat	2.0L L4 F/I - Non-US	69-9756TFK [2]	
2012 VOLKSWAGEN			
CC	2.0L L4 DSL	69-9756TFK [2]	
CC	2.0L L4 F/I - Non-US	69-9756TFK [2]	
CC	2.0L L4 F/I - US	69-9504TTK [2]	9.2 @ 4853
Eos	2.0L L4 F/I - Non-US	69-9756TFK [2]	
Eos	2.0L L4 F/I - US	69-9504TTK [2]	9.2 @ 4853
Golf Plus	2.0L L4 DSL	69-9756TFK [2]	
Golf VI	1.6L L4 DSL	69-9756TFK [2]	
Golf VI	1.8L L4 F/I	69-9756TFK [2]	
Golf VI	2.0L L4 DSL	69-9756TFK [2]	
Golf VI	2.0L L4 F/I - 211BHP	69-9756TFK [2]	
GTI	2.0L L4 F/I - US	69-9504TTK [2]	9.2 @ 4853
Jetta V	1.6L L4 DSL	69-9756TFK [2]	
Jetta V	2.0L L4 DSL	69-9756TFK [2]	
Jetta V	2.0L L4 F/I	69-9756TFK [2]	
Passat	1.8L L4 F/I	69-9756TFK [2]	
Passat CC	1.8L L4 F/I	69-9756TFK [2]	
Passat CC	2.0L L4 DSL	69-9756TFK [2]	
2011 VOLKSWAGEN			
CC	2.0L L4 F/I - US	69-9504TTK [2]	9.2 @ 4853
Golf Plus	2.0L L4 DSL	69-9756TFK [2]	
Golf VI	2.0L L4 DSL	69-9756TFK [2]	
Golf VI	2.0L L4 F/I - 211BHP	69-9756TFK [2]	
2011 VOLKSWAGEN			
GTI	2.0L L4 F/I - US	69-9504TTK [2]	9.2 @ 4853
Passat CC	2.0L L4 DSL	69-9756TFK [2]	
2010 VOLKSWAGEN			
CC	2.0L L4 F/I - US	69-9504TTK [2]	9.2 @ 4853
Eos	2.0L L4 F/I - US	69-9504TTK [2]	9.2 @ 4853
Golf Plus	2.0L L4 DSL	69-9756TFK [2]	
Golf VI	2.0L L4 DSL	69-9756TFK [2]	
Golf VI	2.0L L4 F/I - 211BHP	69-9756TFK [2]	
GTI	2.0L L4 F/I - US	69-9504TTK [2]	9.2 @ 4853
Jetta GLi	2.0L L4 F/I - US	69-9504TTK [2]	9.2 @ 4853
Passat	2.0L L4 F/I - US	69-9504TTK [2]	9.2 @ 4853
Passat CC	2.0L L4 DSL	69-9756TFK [2]	
2009 VOLKSWAGEN			
CC	2.0L L4 F/I - US	69-9504TTK [2]	9.2 @ 4853
Eos	2.0L L4 DSL	69-9756TFK [2]	
Eos	2.0L L4 F/I - US	69-9504TTK [2]	9.2 @ 4853
Golf VI	2.0L L4 DSL	69-9756TFK [2]	
Golf VI	2.0L L4 F/I - 211BHP	69-9756TFK [2]	
GTI	2.0L L4 F/I - US	69-9504TTK [2]	9.2 @ 4853
Jetta GLi	2.0L L4 F/I - US	69-9504TTK [2]	9.2 @ 4853
Jetta V	1.9L L4 DSL	69-9756TFK [2]	
Jetta V	2.0L L4 DSL	69-9756TFK [2]	
Passat	2.0L L4 DSL	69-9756TFK [2]	
Passat	2.0L L4 F/I - US	69-9504TTK [2]	9.2 @ 4853
Passat CC	2.0L L4 DSL	69-9756TFK [2]	
2008 VOLKSWAGEN			
Eos	2.0L L4 DSL	69-9756TFK [2]	
Eos	2.0L L4 F/I - 150BHP	69-9754TS [2]	
Eos	2.0L L4 F/I - 200BHP	69-9503TFK [2]	18.6 @ 4500
Golf V	2.0L L4 F/I - 200BHP	69-9503TFK [2]	18.6 @ 4500
Golf V GTI	2.0L L4 F/I	69-9503TFK [2]	18.6 @ 4500
Golf VI	2.0L L4 DSL	69-9756TFK [2]	
GTI	2.0L L4 F/I	69-9503TFK [2]	18.6 @ 4500
Jetta V	2.0L L4 DSL	69-9756TFK [2]	
Jetta V	2.0L L4 F/I - 150BHP	69-9754TS [2]	
Jetta V	2.0L L4 F/I - 200BHP	69-9503TFK [2]	18.6 @ 4500
Passat	2.0L L4 DSL	69-9756TFK [2]	
Passat	2.0L L4 F/I - 200BHP	69-9503TFK [2]	18.6 @ 4500
2007 VOLKSWAGEN			
Eos	2.0L L4 DSL	69-9756TFK [2]	
Eos	2.0L L4 F/I - 150BHP	69-9754TS [2]	
Eos	2.0L L4 F/I - 200BHP	69-9503TFK [2]	18.6 @ 4500
Golf Plus	2.0L L4 DSL	69-9756TFK [2]	
Golf Plus	2.0L L4 F/I	69-9754TS [2]	
Golf V	2.0L L4 DSL	69-9756TFK [2]	
Golf V	2.0L L4 F/I - 150BHP	69-9754TS [2]	
Golf V	2.0L L4 F/I - 200BHP	69-9503TFK [2]	18.6 @ 4500
Golf V GTI	2.0L L4 F/I	69-9503TFK [2]	18.6 @ 4500
GTI	2.0L L4 F/I	69-9503TFK [2]	18.6 @ 4500
Jetta GLi	2.0L L4 F/I	69-9503TFK [1]	18.6 @ 4500
Jetta V	2.0L L4 DSL	69-9756TFK [2]	
Jetta V	2.0L L4 F/I - 150BHP	69-9754TS [2]	
Jetta V	2.0L L4 F/I - 200BHP	69-9503TFK [2]	18.6 @ 4500
Passat	2.0L L4 DSL	69-9756TFK [2]	
Passat	2.0L L4 F/I - 200BHP	69-9503TFK [2]	18.6 @ 4500
2006 VOLKSWAGEN			
Golf Plus	1.9L L4 DSL	69-9756TFK [2]	

1) Street legal in all US states. 2) Street legal in most states, but not legal for use in California or other states with similar emission control regulations.
* Estimated horsepower gains are based on specific or similar vehicle dyno tests. Results will vary. See Page 479 for more information.
Partial Listing - Complete List of Vehicles and Applications at knfilters.com. See page 5 for information on intake tube materials/colors.

Vehicle	Engine Type	Intake Kit	Estimated Horsepower*
2006 VOLKSWAGEN			
Golf Plus	2.0L L4 DSL	69-9756TFK [2]	
Golf Plus	2.0L L4 F/I	69-9754TS [2]	
Golf V	1.9L L4 DSL	69-9756TFK [2]	
Golf V	2.0L L4 DSL	69-9756TFK [2]	
Golf V	2.0L L4 F/I - 150BHP	69-9754TS [2]	
Golf V	2.0L L4 F/I - 200BHP	69-9503TFK [2]	18.6 @ 4500
Golf V GTI	2.0L L4 F/I	69-9503TFK [2]	18.6 @ 4500
GTI	2.0L L4 F/I	69-9503TFK [2]	18.6 @ 4500
Jetta GLi	2.0L L4 F/I	69-9503TFK [1]	18.6 @ 4500
Jetta V	1.9L L4 DSL	69-9756TFK [2]	
Jetta V	2.0L L4 DSL	69-9756TFK [2]	
Jetta V	2.0L L4 F/I - 150BHP	69-9754TS [2]	
Jetta V	2.0L L4 F/I - 200BHP	69-9503TFK [2]	18.6 @ 4500
Passat	2.0L L4 DSL	69-9756TFK [2]	
Passat	2.0L L4 F/I - 200BHP	69-9503TFK [2]	18.6 @ 4500
2005 VOLKSWAGEN			
Golf	2.0L L4 F/I	69-9501TP [2]	10.0 @ 5079
		69-9501TB [2]	10.0 @ 5079
Golf GTI	1.8L L4 F/I	69-9501TP [2]	10.0 @ 5079
		69-9501TB [2]	10.0 @ 5079
Golf Plus	1.9L L4 DSL	69-9756TFK [2]	
Golf Plus	2.0L L4 DSL	69-9756TFK [2]	
Golf Plus	2.0L L4 F/I	69-9754TS [2]	
Golf V	1.9L L4 DSL	69-9756TFK [2]	
Golf V	2.0L L4 DSL	69-9756TFK [2]	
Golf V	2.0L L4 F/I - 150BHP	69-9754TS [2]	
Golf V	2.0L L4 F/I - 200BHP	69-9503TFK [2]	18.6 @ 4500
Golf V GTI	2.0L L4 F/I	69-9503TFK [2]	18.6 @ 4500
Jetta V	1.9L L4 DSL	69-9756TFK [2]	
Jetta V	2.0L L4 DSL	69-9756TFK [2]	
Jetta V	2.0L L4 F/I - 150BHP	69-9754TS [2]	
Jetta V	2.0L L4 F/I - 200BHP	69-9503TFK [2]	18.6 @ 4500
Passat	2.0L L4 DSL - 3C Model	69-9756TFK [2]	
Passat	2.0L L4 F/I - 200BHP, 3C Model	69-9503TFK [2]	18.6 @ 4500
2004 VOLKSWAGEN			
Golf	2.0L L4 F/I - US	69-9501TP [2]	10.0 @ 5079
		69-9501TB [2]	10.0 @ 5079
Golf GTI	1.8L L4 F/I - US	69-9501TP [2]	10.0 @ 5079
		69-9501TB [2]	10.0 @ 5079
Golf IV	1.8L L4 F/I - 150BHP, w/Eng. AAP	69-9501TP [2]	10.0 @ 5079
		69-9501TB [2]	10.0 @ 5079
Golf IV	2.0L L4 F/I	69-9501TP [2]	10.0 @ 5079
		69-9501TB [2]	10.0 @ 5079
Golf IV	2.8L V6 F/I	69-8250TWR [2]	
		69-8250TS [2]	
Golf IV GTI	1.8L L4 F/I - w/Eng. AAP	69-9501TP [2]	10.0 @ 5079
		69-9501TB [2]	10.0 @ 5079
Golf Plus	2.0L L4 DSL	69-9756TFK [2]	
Golf R32	3.2L V6 F/I	69-9502TP [2]	17.7 @ 5684
		69-9502TB [2]	17.7 @ 5684
Golf V	1.9L L4 DSL	69-9756TFK [2]	
Golf V	2.0L L4 DSL	69-9756TFK [2]	
Golf V	2.0L L4 F/I - 150BHP	69-9754TS [2]	
Golf V	2.0L L4 F/I - 200BHP	69-9503TFK [2]	18.6 @ 4500
Golf V GTI	2.0L L4 F/I	69-9503TFK [2]	18.6 @ 4500

Vehicle	Engine Type	Intake Kit	Estimated Horsepower*
2004 VOLKSWAGEN			
Jetta	1.8L L4 F/I	69-9501TP [2]	10.0 @ 5079
		69-9501TB [2]	10.0 @ 5079
Jetta	2.0L L4 F/I	69-9501TP [2]	10.0 @ 5079
		69-9501TB [2]	10.0 @ 5079
2003 VOLKSWAGEN			
Golf	2.0L L4 F/I - US	69-9501TP [2]	10.0 @ 5079
		69-9501TB [2]	10.0 @ 5079
Golf GTI	1.8L L4 F/I - US	69-9501TP [2]	10.0 @ 5079
		69-9501TB [2]	10.0 @ 5079
Golf IV	1.6L L4 F/I - 102/105BHP	69-9751TS [2]	
Golf IV	1.8L L4 F/I - 150BHP, w/Eng. AAP	69-9501TP [2]	10.0 @ 5079
		69-9501TB [2]	10.0 @ 5079
Golf IV	2.0L L4 F/I	69-9501TP [2]	10.0 @ 5079
		69-9501TB [2]	10.0 @ 5079
Golf IV	2.8L V6 F/I	69-8250TWR [2]	
		69-8250TS [2]	
Golf IV GTI	1.8L L4 F/I - w/Eng. AAP	69-9501TP [2]	10.0 @ 5079
		69-9501TB [2]	10.0 @ 5079
Golf V	1.9L L4 DSL	69-9756TFK [2]	
Golf V	2.0L L4 DSL	69-9756TFK [2]	
Jetta	1.8L L4 F/I	69-9501TP [2]	10.0 @ 5079
		69-9501TB [2]	10.0 @ 5079
Jetta	2.0L L4 F/I	69-9501TP [2]	10.0 @ 5079
		69-9501TB [2]	10.0 @ 5079
2002 VOLKSWAGEN			
Golf	2.0L L4 F/I - US	69-9501TP [2]	10.0 @ 5079
		69-9501TB [2]	10.0 @ 5079
Golf GTI	1.8L L4 F/I - US	69-9501TP [2]	10.0 @ 5079
		69-9501TB [2]	10.0 @ 5079
Golf IV	1.8L L4 F/I - 150BHP, w/Eng. AAP	69-9501TP [2]	10.0 @ 5079
		69-9501TB [2]	10.0 @ 5079
Golf IV	2.0L L4 F/I	69-9501TP [2]	10.0 @ 5079
		69-9501TB [2]	10.0 @ 5079
Golf IV	2.8L V6 F/I	69-8250TWR [2]	
		69-8250TS [2]	
Golf IV GTI	1.8L L4 F/I - w/Eng. AAP	69-9501TP [2]	10.0 @ 5079
		69-9501TB [2]	10.0 @ 5079
Jetta	1.8L L4 F/I	69-9501TP [2]	10.0 @ 5079
		69-9501TB [2]	10.0 @ 5079
Jetta	2.0L L4 F/I	69-9501TP [2]	10.0 @ 5079
		69-9501TB [2]	10.0 @ 5079
2001 VOLKSWAGEN			
Golf	1.8L L4 F/I - US	69-9501TP [2]	10.0 @ 5079
		69-9501TB [2]	10.0 @ 5079
Golf	2.0L L4 F/I	69-9501TP [2]	10.0 @ 5079
		69-9501TB [2]	10.0 @ 5079
Golf GTI	1.8L L4 F/I - US	69-9501TP [2]	10.0 @ 5079
		69-9501TB [2]	10.0 @ 5079
Golf IV	1.8L L4 F/I - 150BHP, w/Eng. AAP	69-9501TP [2]	10.0 @ 5079
		69-9501TB [2]	10.0 @ 5079
Golf IV	2.0L L4 F/I - Exc. Eng. AAP	69-9752TP [2]	8.0 @ 6000

1) Street legal in all US states. 2) Street legal in most states, but not legal for use in California or other states with similar emission control regulations.
* Estimated horsepower gains are based on specific or similar vehicle dyno tests. Results will vary. See Page 479 for more information.
Partial Listing - Complete List of Vehicles and Applications at knfilters.com. See page 5 for information on intake tube materials/colors.

Vehicle	Engine Type	Intake Kit	Estimated Horsepower*
2001 VOLKSWAGEN			
Golf IV	2.0L L4 F/I - Exc. Eng. AAP	69-9752TB [2]	8.0 @ 6000
Golf IV	2.0L L4 F/I - w/Eng. AAP	69-9501TP [2]	10.0 @ 5079
		69-9501TB [2]	10.0 @ 5079
Golf IV	2.8L V6 F/I	69-8250TWR [2]	
		69-8250TS [2]	
Golf IV GTI	1.8L L4 F/I - w/Eng. AAP	69-9501TP [2]	10.0 @ 5079
		69-9501TB [2]	10.0 @ 5079
Jetta	1.8L L4 F/I	69-9501TP [2]	10.0 @ 5079
		69-9501TB [2]	10.0 @ 5079
Jetta	2.0L L4 F/I	69-9501TP [2]	10.0 @ 5079
		69-9501TB [2]	10.0 @ 5079
2000 VOLKSWAGEN			
Golf	2.0L L4 F/I	69-9501TP [2]	10.0 @ 5079
		69-9501TB [2]	10.0 @ 5079
Golf IV	1.8L L4 F/I - 150BHP, w/Eng. AAP	69-9501TP [2]	10.0 @ 5079
		69-9501TB [2]	10.0 @ 5079
Golf IV	2.0L L4 F/I - Exc. Eng. AAP	69-9752TP [2]	8.0 @ 6000
		69-9752TB [2]	8.0 @ 6000
Golf IV	2.0L L4 F/I - w/Eng. AAP	69-9501TP [2]	10.0 @ 5079
		69-9501TB [2]	10.0 @ 5079
Golf IV	2.8L V6 F/I	69-8250TWR [2]	
		69-8250TS [2]	
Golf IV GTI	1.8L L4 F/I - w/Eng. AAP	69-9501TP [2]	10.0 @ 5079
		69-9501TB [2]	10.0 @ 5079
Jetta	1.8L L4 F/I	69-9501TP [2]	10.0 @ 5079
		69-9501TB [2]	10.0 @ 5079
Jetta	2.0L L4 F/I	69-9501TP [2]	10.0 @ 5079
		69-9501TB [2]	10.0 @ 5079
1999 VOLKSWAGEN			
Golf IV	2.0L L4 F/I - Exc. Eng. AAP	69-9752TP [2]	8.0 @ 6000
		69-9752TB [2]	8.0 @ 6000
Golf IV	2.0L L4 F/I - w/Eng. AAP	69-9501TP [2]	10.0 @ 5079
		69-9501TB [2]	10.0 @ 5079
Golf IV GTI	1.8L L4 F/I	69-9501TP [2]	10.0 @ 5079
		69-9501TB [2]	10.0 @ 5079
1998 VOLKSWAGEN			
Golf IV	2.0L L4 F/I - Exc. Eng. AAP	69-9752TP [2]	8.0 @ 6000
		69-9752TB [2]	8.0 @ 6000
Golf IV	2.0L L4 F/I - w/Eng. AAP	69-9501TP [2]	10.0 @ 5079
		69-9501TB [2]	10.0 @ 5079
2012 VOLVO			
C30	2.5L L5 F/I - Non-US	69-9000TS [2]	14.6 @ 3925
2011 VOLVO			
C30	2.5L L5 F/I - Non-US	69-9000TS [2]	14.6 @ 3925
S40 II	2.5L L5 F/I - Non-US	69-9000TS [2]	14.6 @ 3925

Vehicle	Engine Type	Intake Kit	Estimated Horsepower*
2010 VOLVO			
C30	2.5L L5 F/I	69-9000TS [2]	14.6 @ 3925
2009 VOLVO			
C30	2.5L L5 F/I	69-9000TS [2]	14.6 @ 3925
S40 II	2.5L L5 F/I	69-9000TS [2]	14.6 @ 3925
2008 VOLVO			
C30	2.5L L5 F/I	69-9000TS [2]	14.6 @ 3925
S40 II	2.5L L5 F/I	69-9000TS [2]	14.6 @ 3925
2007 VOLVO			
S40 II	2.5L L5 F/I	69-9000TS [2]	14.6 @ 3925
2006 VOLVO			
S40	2.5L L5 F/I	69-9000TS [1]	14.6 @ 3925
S40 II	2.5L L5 F/I	69-9000TS [2]	14.6 @ 3925
2005 VOLVO			
S40	2.5L L5 F/I	69-9000TS [1]	14.6 @ 3925
S40 II	2.5L L5 F/I	69-9000TS [2]	14.6 @ 3925
V50	2.5L L5 F/I - Non-US	69-9000TS [2]	14.6 @ 3925
2004 VOLVO			
S40	2.5L L5 F/I	69-9000TS [1]	14.6 @ 3925
S40 II	2.5L L5 F/I	69-9000TS [2]	14.6 @ 3925
2009 YAMAHA			
YFZ450	449 - Exc. F/I	63-1123 [2]	4.2 @ 7200
2008 YAMAHA			
YFZ450	449	63-1123 [2]	4.3 @ 7200
YFZ450 SE	449	63-1123 [2]	4.3 @ 7200
2007 YAMAHA			
YFZ450	449	63-1123 [2]	4.2 @ 7200
YFZ450 SE	449	63-1123 [2]	4.2 @ 7200
YXR660 Rhino	660	63-1119 [2]	
2006 YAMAHA			
YFZ450	449	63-1123 [2]	4.2 @ 7200
YXR660 Rhino	660	63-1119 [2]	
2005 YAMAHA			
YFZ450	449	63-1123 [2]	4.2 @ 7200
YXR660 Rhino	660	63-1119 [2]	
2004 YAMAHA			
YFZ450	449	63-1123 [2]	4.2 @ 7200
YXR660 Rhino	660	63-1119 [2]	

1) Street legal in all US states. 2) Street legal in most states, but not legal for use in California or other states with similar emission control regulations.
* Estimated horsepower gains are based on specific or similar vehicle dyno tests. Results will vary. See Page 479 for more information.
Partial Listing - Complete List of Vehicles and Applications at knfilters.com. See page 5 for information on intake tube materials/colors.

Vehicle	Engine Type	Air Filter	Oil Filter
2013 ACURA			
ILX	1.5L L4 F/I	33-2348	HP-1010
ILX	2.0L L4 F/I	33-2468	HP-1010
ILX	2.4L L4 F/I	33-2473	HP-1010
MDX	3.7L V6 F/I	33-2454	HP-1010
RDX	3.5L V6 F/I		HP-1010
RL	3.7L V6 F/I		HP-1010
TL	3.5L V6 F/I	33-2403	HP-1010
TL	3.7L V6 F/I	33-2403	HP-1010
TSX	2.4L L4 F/I	33-2430	HP-1010
TSX	3.5L V6 F/I	33-2403	HP-1010
ZDX	3.7L V6 F/I	33-2454	HP-1010
2012 ACURA			
MDX	3.7L V6 F/I	33-2454	HP-1010
RDX	2.3L L4 F/I	33-2382	HP-1010
RL	3.7L V6 F/I	33-2425	HP-1010
TL	3.5L V6 F/I	33-2403	HP-1010
TL	3.7L V6 F/I	33-2403	HP-1010
TSX	2.4L L4 F/I	33-2430 ♦	HP-1010
TSX	3.5L V6 F/I	33-2403	HP-1010
ZDX	3.7L V6 F/I	33-2454	HP-1010
2011 ACURA			
CSX	2.0L L4 F/I		HP-1010
MDX	3.7L V6 F/I	33-2454	HP-1010
RDX	2.3L L4 F/I	33-2382 ♦	HP-1010
RL	3.7L V6 F/I	33-2425	HP-1010
TL	3.5L V6 F/I	33-2403	HP-1010
TL	3.7L V6 F/I	33-2403	HP-1010
TSX	2.4L L4 F/I	33-2430 ♦	HP-1010
TSX	3.5L V6 F/I	33-2403	HP-1010
ZDX	3.7L V6 F/I	33-2454	HP-1010
2010 ACURA			
CSX	2.0L L4 F/I		HP-1010
MDX	3.7L V6 F/I	33-2454	HP-1010
RDX	2.3L L4 F/I	33-2382 ♦	HP-1010
RL	3.7L V6 F/I	33-2425	HP-1010
TL	3.5L V6 F/I	33-2403 ♦	HP-1010
TL	3.7L V6 F/I	33-2403 ♦	HP-1010
TSX	2.4L L4 F/I	33-2430 ♦	HP-1010
TSX	3.5L V6 F/I	33-2403	HP-1010
ZDX	3.7L V6 F/I	33-2454	HP-1010
2009 ACURA			
CSX	2.0L L4 F/I		HP-1010
MDX	3.7L V6 F/I	33-2383	HP-1010
RDX	2.3L L4 F/I	33-2382 ♦	HP-1010
RL	3.7L V6 F/I	33-2425	HP-1010
TL	3.5L V6 F/I	33-2403 ♦	HP-1010
TL	3.7L V6 F/I	33-2403	HP-1010
TSX	2.4L L4 F/I	33-2430 ♦	HP-1010
2008 ACURA			
CSX	2.0L L4 F/I		HP-1010
MDX	3.7L V6 F/I	33-2383	HP-1010
RDX	2.3L L4 F/I	33-2382 ♦	HP-1010
RL	3.5L V6 F/I	33-2299	HP-1010
TL	3.2L V6 F/I	33-2379 ♦	HP-1010
TL	3.5L V6 F/I	33-2379 ♦	HP-1010
TSX	2.4L L4 F/I	33-2276 ♦	HP-1010
2007 ACURA			
CSX	2.0L L4 F/I		HP-1010
MDX	3.7L V6 F/I	33-2383	HP-1010
RDX	2.3L L4 F/I	33-2382 ♦	HP-1010
RL	3.5L V6 F/I	33-2299	HP-1010
2007 ACURA			
RSX	2.0L L4 F/I	E-2429	
TL	3.2L V6 F/I	33-2379 ♦	HP-1010
TL	3.5L V6 F/I	33-2379 ♦	HP-1010
TSX	2.4L L4 F/I	33-2276 ♦	HP-1010
2006 ACURA			
CSX	2.0L L4 F/I		HP-1010
MDX	3.5L V6 F/I	33-2200	HP-1010
RL	3.5L V6 F/I	33-2299	HP-1010
RSX	2.0L L4 F/I	E-2429 ♦	HP-1010
RSX Type-S	2.0L L4 F/I	E-2429 ♦	HP-1010
TL	3.2L V6 F/I	33-2299 ♦	HP-1010
TSX	2.4L L4 F/I	33-2276 ♦	HP-1010
2005 ACURA			
EL	1.7L L4 F/I		HP-1010
MDX	3.5L V6 F/I	33-2200	HP-1010
NSX	3.0L V6 F/I	33-2713	
NSX	3.2L V6 F/I	33-2713	
RL	3.5L V6 F/I	33-2299	HP-1010
RSX	2.0L L4 F/I	E-2429 ♦	HP-1010
RSX Type-S	2.0L L4 F/I	E-2429 ♦	HP-1010
TL	3.2L V6 F/I	33-2299 ♦	HP-1010
TSX	2.4L L4 F/I	33-2276 ♦	HP-1010
2004 ACURA			
EL	1.7L L4 F/I		HP-1010
MDX	3.5L V6 F/I	33-2200	HP-1010
NSX	3.0L V6 F/I	33-2713	
NSX	3.2L V6 F/I	33-2713	
RL	3.5L V6 F/I	33-2179	HP-1004
RSX	2.0L L4 F/I	E-2429 ♦	HP-1010
RSX Type-S	2.0L L4 F/I	E-2429 ♦	HP-1010
TL	3.2L V6 F/I	33-2299 ♦	HP-1010
TSX	2.4L L4 F/I	33-2276 ♦	HP-1010
2003 ACURA			
CL	3.2L V6 F/I	33-2133	HP-1004
CL Type-S	3.2L V6 F/I	33-2178	HP-1004
MDX	3.5L V6 F/I	33-2200	HP-1010
NSX	3.2L V6 F/I	33-2713	
RL	3.5L V6 F/I	33-2179	HP-1004
RSX	2.0L L4 F/I	E-2429 ♦	HP-1010
RSX Type-S	2.0L L4 F/I	E-2429 ♦	HP-1010
TL	3.2L V6 F/I	33-2133	HP-1004
TL Type-S	3.2L V6 F/I	33-2178	HP-1004
2002 ACURA			
CL	3.2L V6 F/I	33-2133	HP-1004
CL Type-S	3.2L V6 F/I	33-2178	HP-1004
EL	1.7L L4 F/I	33-2192 ♦	HP-1004
MDX	3.5L V6 F/I	33-2200	HP-1004
NSX	3.0L V6 F/I	33-2713	
NSX	3.2L V6 F/I	33-2713	
RL	3.5L V6 F/I	33-2179	HP-1004
RSX	2.0L L4 F/I	E-2429 ♦	HP-1010
RSX Type-S	2.0L L4 F/I	E-2429 ♦	HP-1010
TL	3.2L V6 F/I	33-2133	HP-1004
TL Type-S	3.2L V6 F/I	33-2178	HP-1004
2001 ACURA			
CL	3.2L V6 F/I	33-2133	HP-1004
CL Type-S	3.2L V6 F/I	33-2178	HP-1004
EL	1.7L L4 F/I	33-2192 ♦	HP-1004
Integra	1.8L L4 F/I	E-2427	HP-1004
Integra GS-R	1.8L L4 F/I	E-2427 ♦	HP-1004
Integra Type R	1.8L L4 F/I	E-2427	HP-1004

*Indicates 2 filters required ♦ - Intake kit available - see page 80 Applications updated daily at knfilters.com

Vehicle	Engine Type	Air Filter	Oil Filter
2001 ACURA			
MDX	3.5L V6 F/I	33-2200	HP-1004
NSX	3.0L V6 F/I	33-2713	
NSX	3.2L V6 F/I	33-2713	
RL	3.5L V6 F/I	33-2179	HP-1004
TL	3.2L V6 F/I	33-2133	HP-1004
2000 ACURA			
EL	1.6L L4 F/I		HP-1004
Integra	1.8L L4 F/I	E-2427	HP-1004
Integra GS-R	1.8L L4 F/I	E-2427 ♦	HP-1004
Integra Type R	1.8L L4 F/I	E-2427	HP-1004
NSX	3.0L V6 F/I	33-2713	
NSX	3.2L V6 F/I	33-2713	
RL	3.5L V6 F/I	33-2179	HP-1004
TL	3.2L V6 F/I	33-2133	HP-1004
1999 ACURA			
CL	2.3L L4 F/I	33-2071	HP-1004
CL	3.0L V6 F/I	33-2100	HP-1004
EL	1.6L L4 F/I		HP-1004
Integra	1.8L L4 F/I	E-2427	HP-1004
Integra GS-R	1.8L L4 F/I	E-2427 ♦	HP-1004
Integra Type R	1.8L L4 F/I	E-2427	HP-1004
NSX	3.0L V6 F/I	33-2713	
NSX	3.2L V6 F/I	33-2713	
RL	3.5L V6 F/I	33-2179	HP-1004
SLX	3.5L V6 F/I	33-2064	HP-1004
TL	3.2L V6 F/I	33-2133	HP-1004
1998 ACURA			
CL	2.3L L4 F/I	33-2071	HP-1004
CL	3.0L V6 F/I	33-2100	HP-1004
EL	1.6L L4 F/I		HP-1004
Integra	1.8L L4 F/I	E-2427	HP-1004
Integra GS-R	1.8L L4 F/I	E-2427 ♦	HP-1004
Integra Type R	1.8L L4 F/I	E-2427	HP-1004
NSX	3.0L V6 F/I	33-2713	
NSX	3.2L V6 F/I	33-2713	
RL	3.5L V6 F/I	33-2179	HP-1004
SLX	3.5L V6 F/I	33-2064	HP-1004
TL	2.5L L5 F/I	33-2267	HP-1004
TL	3.2L V6 F/I	33-2089	
1997 ACURA			
CL	2.2L L4 F/I	33-2071	HP-1004
CL	3.0L V6 F/I	33-2100	HP-1004
EL	1.6L L4 F/I		HP-1004
Integra	1.8L L4 F/I	E-2427	HP-1004
Integra GS-R	1.8L L4 F/I	E-2427 ♦	HP-1004
Integra Type R	1.8L L4 F/I	E-2427	HP-1004
NSX	3.0L V6 F/I	33-2713	
NSX	3.2L V6 F/I	33-2713	
RL	3.5L V6 F/I	33-2179	HP-1004
TL	2.5L L5 F/I	33-2267	HP-1004
TL	3.2L V6 F/I	33-2089	
1996 ACURA			
Integra	1.8L L4 F/I	E-2427	HP-1004
Integra GS-R	1.8L L4 F/I	E-2427 ♦	HP-1004
NSX	3.0L V6 F/I	33-2713	
RL	3.5L V6 F/I	33-2179	HP-1004
SLX	3.2L V6 F/I	33-2064	HP-1004
TL	2.5L L5 F/I	33-2267	HP-1004
TL	3.2L V6 F/I	33-2089	
1995 ACURA			
Integra	1.8L L4 F/I	E-2427 ♦	HP-1004
1995 ACURA			
Integra GS-R	1.8L L4 F/I	E-2427 ♦	HP-1004
Legend	3.2L V6 F/I	33-2089	
NSX	3.0L V6 F/I	33-2713	
TL	2.5L L5 F/I		HP-1004
1994 ACURA			
Integra	1.8L L4 F/I	E-2427 ♦	HP-1004
Integra GS-R	1.8L L4 F/I	E-2427 ♦	HP-1004
Legend	3.2L V6 F/I	33-2089	
NSX	3.0L V6 F/I	33-2713 ♦	
Vigor	2.5L L5 F/I		HP-1004
1993 ACURA			
Integra	1.8L L4 F/I	33-2028 ♦	HP-1004
Integra GS-R	1.7L L4 F/I	33-2028 ♦	HP-1004
Legend	3.2L V6 F/I	33-2089	
NSX	3.0L V6 F/I	33-2713 ♦	
Vigor	2.5L L5 F/I		HP-1004
1992 ACURA			
Integra	1.8L L4 F/I	33-2028 ♦	HP-1004
Integra GS-R	1.7L L4 F/I	33-2028 ♦	HP-1004
Legend	3.2L V6 F/I	33-2089	
NSX	3.0L V6 F/I	33-2713 ♦	
Vigor	2.5L L5 F/I		HP-1004
1991 ACURA			
Integra	1.8L L4 F/I	33-2028 ♦	HP-1004
Legend	3.2L V6 F/I	33-2089	
NSX	3.0L V6 F/I	33-2713 ♦	
1990 ACURA			
Integra	1.8L L4 F/I	33-2028 ♦	HP-1004
Legend	2.7L V6 F/I	E-0999	
1989 ACURA			
Integra	1.6L L4 F/I	33-2021 ♦	HP-1004
Legend	2.7L V6 F/I	E-0999	
1988 ACURA			
Integra	1.6L L4 F/I	33-2021 ♦	HP-1004
Legend	2.7L V6 F/I	E-0999	
1987 ACURA			
Integra	1.6L L4 F/I	33-2021 ♦	
Legend	2.7L V6 F/I	E-0999	
1986 ACURA			
Integra	1.6L L4 F/I	33-2021 ♦	
2013 ALFA ROMEO			
Giulietta	1.7L L4 F/I	E-2986	
Giulietta	2.0L L4 DSL	E-2991	
Mito	0.9L L2 F/I	33-2981	
Mito	1.4L L4 F/I	33-2935	
2012 ALFA ROMEO			
159	1.7L L4 F/I	E-9281	
Giulietta	1.4L L4 F/I	E-2991	
Giulietta	1.6L L4 DSL	E-2986	
Giulietta	1.7L L4 F/I	E-2986	
Giulietta	2.0L L4 DSL	E-2991	
Mito	1.4L L4 F/I - Turbo	33-2935 ♦	
Mito	1.6L L4 DSL	33-2935	
2011 ALFA ROMEO			
Giulietta	1.4L L4 F/I	E-2991	
Giulietta	1.7L L4 F/I	E-2986	
Mito	1.4L L4 F/I - Turbo	33-2935 ♦	

*Indicates 2 filters required ♦ - Intake kit available - see page 80 Applications updated daily at knfilters.com

Vehicle	Engine Type	Air Filter	Oil Filter
2010 ALFA ROMEO			
Giulietta	1.7L L4 F/I	E-2986	
GT	3.2L V6 F/I	E-9281	
2008 ALFA ROMEO			
147	1.6L L4 F/I	33-2218 ♦	
147	2.0L L4 F/I	33-2218 ♦	
159	2.2L L4 F/I	E-9281	HP-7000
GT	3.2L V6 F/I	E-9268	
2006 ALFA ROMEO			
147	1.6L L4 F/I	33-2218 ♦	
147	1.9L L4 DSL	33-2228	
147	2.0L L4 F/I	33-2218 ♦	
159	1.9L L4 F/I	E-9281	HP-7000
2005 ALFA ROMEO			
147	1.6L L4 F/I	33-2218 ♦	
147	1.9L L4 DSL	33-2228	
156	1.8L L4 F/I	E-9244 ♦	
2004 ALFA ROMEO			
147	1.6L L4 F/I	33-2218 ♦	
147	2.0L L4 F/I	33-2218 ♦	HP-1010
147	3.2L V6 F/I - 250BHP, GTA	E-9268 ♦	
GT	1.8L L4 F/I - square airbox	33-2218 ♦	
GT	1.9L L4 DSL	33-2228	
2003 ALFA ROMEO			
147	1.6L L4 F/I	33-2218 ♦	
147	2.0L L4 F/I	33-2218 ♦	HP-1010
147	3.2L V6 F/I - 250BHP, GTA	E-9268 ♦	
156	1.9L L4 DSL - JTD, 16v	E-9244	
156	2.0L L4 F/I	E-9244 ♦	
2002 ALFA ROMEO			
147	2.0L L4 F/I	33-2218 ♦	
156	3.2L V6 F/I	E-9268 ♦	
2000 ALFA ROMEO			
145	1.6L F4 F/I	33-2748-1	
1999 ALFA ROMEO			
156	1.8L L4 F/I	E-9244 ♦	
1997 ALFA ROMEO			
146	2.0L L4 F/I	33-2748-1 ♦	
GTV	2.0L L4 F/I	E-9228	
GTV	2.0L V6 F/I - w/Panel Filter	33-2748-1	
GTV	2.0L V6 F/I - w/Round Filter	E-9228	
1996 ALFA ROMEO			
Spider	2.0L V6 F/I - w/Panel Filter	33-2748-1	
Spider	2.0L V6 F/I - w/Round Filter	E-9228	
1993 ALFA ROMEO			
164	3.0L V6 F/I	33-2645	HP-2004
Spider	2.0L L4 F/I	33-2546	HP-2004
1992 ALFA ROMEO			
164	3.0L V6 F/I	33-2645	HP-2004
Spider	2.0L L4 F/I	33-2546	HP-2004
1991 ALFA ROMEO			
164	2.0L L4 F/I	33-2645	
164	2.0L V6 F/I	33-2645	
164	3.0L V6 F/I	33-2645	HP-2004

Vehicle	Engine Type	Air Filter	Oil Filter
1991 ALFA ROMEO			
Spider	2.0L L4 F/I	33-2546	HP-2004
1990 ALFA ROMEO			
Spider	2.0L L4 F/I	33-2546	HP-2004
1989 ALFA ROMEO			
75/Milano	2.0L L4 CARB	33-2508	
Spider	1.6L L4 CARB	33-2546	
Spider	2.0L L4 F/I	33-2546	HP-2004
1988 ALFA ROMEO			
75/Milano	3.0L V6 F/I	33-2545	HP-2004
Milano	2.5L V6 F/I - US	33-2545	HP-2004
Spider	2.0L L4 F/I	33-2546	HP-2004
1987 ALFA ROMEO			
75/Milano	2.5L V6 F/I - 221x397mm	33-2545	
75/Milano	2.5L V6 F/I - 229x333mm	33-2546	
Spider	2.0L L4 F/I	33-2546	HP-2004
1986 ALFA ROMEO			
75/Milano	1.8L L4 CARB	33-2508	
75/Milano	1.8L L4 F/I - exc. Evoluzione	33-2546	
GTV-6	2.5L V6 F/I	33-2545	HP-2004
Spider	2.0L L4 F/I	33-2546	HP-2004
1985 ALFA ROMEO			
GTV-6	2.5L V6 F/I	33-2545	HP-2004
Spider	2.0L L4 F/I	33-2546	HP-2004
1984 ALFA ROMEO			
33	1.2L F4 CARB	E-1015	
Spider	2.0L L4 F/I	33-2546	HP-2004
1983 ALFA ROMEO			
Spider	2.0L L4 F/I	33-2546	HP-2004
1982 ALFA ROMEO			
Spider	2.0L L4 F/I	33-2546	HP-2004
1981 ALFA ROMEO			
Spider	1.6L L4 CARB	E-9123	
Spider	2.0L L4 F/I	E-2510	HP-2004
1980 ALFA ROMEO			
Alfasud	1.5L F4 CARB - Panel Filter	33-2096	
Alfasud	1.5L F4 CARB - Round Filter	E-1015	
1979 ALFA ROMEO			
Spider	2.0L L4 F/I	E-2510	HP-2004
1978 ALFA ROMEO			
Spider	2.0L L4 CARB	E-2510	
Spider	2.0L L4 F/I	E-2510	HP-2004
1977 ALFA ROMEO			
Spider	2.0L L4 F/I		HP-2004
1976 ALFA ROMEO			
Alfetta	2.0L L4 CARB	33-2508	
Spider	2.0L L4 F/I		HP-2004
1974 ALFA ROMEO			
GT Veloce	2.0L L4 F/I		HP-2004
1973 ALFA ROMEO			
2000	2.0L L4 CARB	E-2040	
1972 ALFA ROMEO			
GT Veloce	2.0L L4 F/I		HP-2004

*Indicates 2 filters required ♦ - Intake kit available - see page 80 Applications updated daily at knfilters.com

Vehicle	Engine Type	Air Filter	Oil Filter
1971 ALFA ROMEO			
1750	1.75L L4 CARB	E-2040	
1969 ALFA ROMEO			
1750	1.75L L4 CARB	E-2040	
2001 AM GENERAL			
Hummer	6.5L V8 DSL	E-1700	HP-3002
2000 AM GENERAL			
Hummer	6.5L V8 DSL	E-1700	HP-3002
1999 AM GENERAL			
Hummer	6.5L V8 DSL	E-1700	HP-3002
1998 AM GENERAL			
Hummer	6.5L V8 DSL	E-1700	HP-3002
1997 AM GENERAL			
Hummer	6.5L V8 DSL	E-1700	HP-3002
1996 AM GENERAL			
Hummer	6.5L V8 DSL	E-1700	HP-3002
1995 AM GENERAL			
Hummer	6.5L V8 DSL	E-1700	HP-3002
1993 AM GENERAL			
Hummer	6.2L V8 DSL	E-1700	HP-3002
1986 AMC			
Eagle	4.2L L6 CARB	E-1080	HP-1007
1982 AMC			
Eagle	4.2L L6 CARB	E-1080	HP-2003
1974 AMC			
Gremlin	258 L6 CARB	E-1080	HP-2003
Javelin	401 V8 CARB	E-1100	HP-2003
1973 AMC			
Javelin	401 V8 CARB	E-1100	HP-2003
1972 AMC			
Gremlin	304 V8 CARB - Early Prod.	E-1010	
1971 AMC			
AMX	401 V8 CARB	E-1100	
Javelin	360 V8 CARB	E-1100	HP-2003
Javelin	401 V8 CARB	E-1100	HP-2003
1970 AMC			
Ambassador	360 V8 CARB	E-1010	HP-2003
AMX	360 V8 CARB	E-1957	
AMX	390 V8 CARB	E-1957	
Javelin	360 V8 CARB	E-1010	HP-2003
Javelin	390 V8 CARB	E-1957	HP-2003
1969 AMC			
AMX	390 V8 CARB	E-1957	
Javelin	343 V8 2 BBL.	E-1010	HP-2003
Javelin	343 V8 4 BBL.		HP-2003
Javelin	343 V8 4 BBL. - 4 BBL	E-1957	HP-2003
1968 AMC			
AMX	390 V8 CARB	E-1957	
1965 AMC			
Marlin	327 V8 CARB	E-1957	HP-2003
1960 AMC			
American	196 L6 CARB	E-1957	
2012 APRILIA			
RS4	125		KN-563

Vehicle	Engine Type	Air Filter	Oil Filter
2012 APRILIA			
RSV 1000 R	998		KN-138
			KN-138C
RSV4 R	1000		KN-138
			KN-138C
RSV4 Factory SE	1000		KN-138
			KN-138C
2011 APRILIA			
RS4	125		KN-563
RSV 1000 R	998		KN-138
			KN-138C
RSV4 R	1000	AL-1010	KN-138
		AL-1010	KN-138C
RSV4 R	1000 - Race Specific	AL-1010R	KN-138
RSV4 Factory SE	1000		KN-138
			KN-138C
2010 APRILIA			
RSV 1000 R	998	AL-1004	KN-138
		AL-1004	KN-138C
RSV4 Factory	1000		KN-138
			KN-138C
RSV4 R	1000	AL-1010	KN-138
		AL-1010	KN-138C
RSV4 R	1000 - Race Specific	AL-1010R	KN-138
Tuono 1000 R	998	AL-1004	KN-152
2009 APRILIA			
RSV 1000 R	998	AL-1004	KN-152
RSV 1000 R Factory	998	AL-1004	KN-152
RSV4 R	1000	AL-1010	KN-138
		AL-1010	KN-138C
RSV4 R	1000 - Race Specific	AL-1010R	KN-138
RXV 450 Enduro	449		KN-563
RXV 550 Enduro	549		KN-563
Scarabeo i.e. Light Special	300		KN-183
Sport City Cube i.e.	250		KN-183
SXV 450	449	AL-4506	KN-563
Tuono 1000 R	998	AL-1004	KN-152
2008 APRILIA			
Pegaso 650	660	AL-6505	KN-145
Pegaso 650 Trail	660	AL-6505	KN-145
RSV 1000 R	998	AL-1004	KN-152
RSV 1000 R Factory	998	AL-1004	KN-152
RXV 450 Enduro	449	AL-4506	KN-563
RXV 550 Enduro	549	AL-4506	KN-563
Scarabeo i.e. Light	250		KN-183
SXV 450	449	AL-4506	KN-563
Tuono 1000 R	998	AL-1004	KN-152
2007 APRILIA			
ETV1000 Caponord	998	AL-1002	KN-152
Pegaso 650	660	AL-6505	KN-145
Pegaso 660	660		KN-145
RSV 1000 R	998	AL-1004	KN-152
RSV 1000 R Factory	998	AL-1004	KN-152
RXV 450 Enduro	449	AL-4506	KN-563
RXV 550 Enduro	549	AL-4506	KN-563
SXV 450	449	AL-4506	KN-563
SXV 550	549	AL-4506	KN-563
Tuono 1000 R	998	AL-1004	KN-152
2006 APRILIA			
ETV1000 Caponord	998	AL-1002	KN-152
Pegaso 650 Trail	659	AL-6505	KN-145

*Indicates 2 filters required ♦ - Intake kit available - see page 80 Applications updated daily at knfilters.com

Vehicle	Engine Type	Air Filter	Oil Filter
2006 APRILIA			
RSV 1000 R	998	AL-1004	KN-152
RSV 1000 R Factory	998	AL-1004	KN-152
Scarabeo GT ABS	500		KN-184
Tuono 1000 R	998	AL-1004	KN-152
2005 APRILIA			
RSV 1000 R	998	AL-1004	KN-152
RSV 1000 R Factory	998	AL-1004	KN-152
2004 APRILIA			
RST1000 Futura	998	AL-1098	KN-152
RSV Mille	998	AL-1004	KN-152
RSV Tuono	998	AL-1001	KN-152
SL1000 Falco	998	AL-1098	KN-152
2003 APRILIA			
Atlantic 500	500		KN-184
ETV1000 Caponord	998	AL-1002	KN-152
RST1000 Futura	998	AL-1098	KN-152
RSV Mille	998	AL-1001	KN-152
Scarabeo 125	125 - Rotax Engine		KN-185
SL1000 Falco	998	AL-1098	KN-152
Tuono Fighter	998	AL-1001	KN-152
2002 APRILIA			
ETV1000 Caponord	998	AL-1002	KN-152
RST1000 Futura	998	AL-1098	KN-152
RSV Mille	998	AL-1001	KN-152
Scarabeo 150	150		KN-185
SL1000 Falco	998	AL-1098	KN-152
2001 APRILIA			
ETV1000 Caponord	998	AL-1002	KN-152
Pegaso 650 i.e.	652	AL-6502	KN-151
RST1000 Futura	998	AL-1098	KN-152
RSV Mille	998	AL-1001	KN-152
RSV Mille SP	998	AL-1098	KN-152
Scarabeo 150	150		KN-185
SL1000 Falco	998	AL-1098	KN-152
2000 APRILIA			
Pegaso 650	652	AL-6502	KN-151
RSV Mille	998	AL-1098	KN-152
RSV Mille R	998	AL-1001	KN-152
1999 APRILIA			
Pegaso 650	652	AL-6502	KN-151
RSV Mille	998	AL-1098	KN-152
2013 ARCTIC CAT			
Prowler XTZ 1000	951	AC-7009	
2012 ARCTIC CAT			
550 H1 EFI	545	AC-7009	KN-621
550i	550		KN-621
550i GT	550		KN-621
700 H1 EFI	695	AC-7009	KN-621
700 H1 EFI Mudpro	695	AC-7009	KN-621
700i	700		KN-621
700i GT	700		KN-621
700i LTD	700		KN-621
700i MudPro	700		KN-621
700i MudPro LTD	700		KN-621
Prowler 550 XT	545	AC-7009	
Prowler 700	695	AC-7009	
Prowler XTZ 1000 H2 EFI	951	AC-7009	
TRV700 H1 EFI	695	AC-7009	KN-621

Vehicle	Engine Type	Air Filter	Oil Filter
2012 ARCTIC CAT			
TRV1000	951	AC-1009	KN-621
Wildcat	951	AC-1012	
2011 ARCTIC CAT			
550 H1 EFI	545	AC-7009	KN-621
650 H1 4x4 Auto	641	AC-4004	
700 H1 EFI	695	AC-7009	KN-621
700 H1 EFI Mudpro	695	AC-7009	KN-621
Prowler 550 XT	545	AC-7009	
Prowler 700	695	AC-7009	
Prowler XTZ 1000 H2 EFI	951	AC-7009	
TRV550 H1 EFI	545	AC-7009	KN-621
TRV700 H1 EFI	695	AC-7009	KN-621
2010 ARCTIC CAT			
550 H1 EFI	545	AC-7009	KN-621
650 H1 4x4 Auto	641	AC-4004	KN-621
700 H1 EFI	695	AC-7009	KN-621
700 H1 EFI Mudpro	695	AC-7009	KN-621
Thundercat 1000 H2	1000	AC-1009	KN-621
TRV400	400		KN-621
TRV550 H1 EFI	545	AC-7009	KN-621
TRV700 H1 EFI	695	AC-7009	KN-621
2009 ARCTIC CAT			
250	249	KY-2504	
366 4x4 Auto	366		KN-621
500 4x4	500	AC-4004	KN-621
500 4x4 Auto	500		KN-621
550 H1 EFI	545	AC-7009	KN-621
650 H1 4x4 Auto	641		KN-621
650 H1 4x4 Auto TBX	641	AC-7009	
700 H1 EFI	695	AC-7009	KN-621
700 H1 EFI LE	695		KN-621
700 H1 EFI Mudpro	695	AC-7009	KN-621
700 H1 EFI SE	695		KN-621
DVX300	300	KY-2504	
Prowler XT 650 H1	650		KN-621
Prowler XTX 700 H1 EFI	700		KN-621
Prowler XTX 700 H1 EFI LE	700		KN-621
Prowler XTZ 1000 H2 EFI	951	AC-7009	KN-621
Thundercat	951	AC-1009	KN-621
TRV400	400		KN-621
TRV550 H1 EFI	545	AC-7009	KN-621
2008 ARCTIC CAT			
250	249	KY-2504	
366 4x4 Auto	366		KN-621
400 4x4 Auto	400	AC-4004	KN-138
		AC-4004	KN-138C
500 4x4	500	AC-4004	KN-138
		AC-4004	KN-138C
500 4x4 Auto	500	AC-4004	KN-621
500 4x4 Auto M4	500	AC-4004	KN-621
500 4x4 Auto TRV	500	AC-4004	KN-621
650 H1 4x4 Auto	641	AC-7009	KN-621
650 H1 4x4 Auto TRV	641	AC-7009	KN-621
700 EFI 4x4 Auto	700		KN-621
700 EFI 4x4 Auto M4	700		KN-621
700 EFI 4x4 Auto TRV LE	700		KN-621
700 H1 EFI	695	AC-7009	KN-621

*Indicates 2 filters required ♦ - Intake kit available - see page 80 Applications updated daily at knfilters.com

Vehicle	Engine Type	Air Filter	Oil Filter
2008 ARCTIC CAT			
700 H1 EFI 4x4 Auto SE	695		KN-621
DVX400	400	SU-4002	KN-139
Prowler 650 4x4 Auto	650		KN-621
Prowler 650 H1	641	AC-7009	
Prowler 700	695	AC-7009	
Prowler XT 650 4x4 Auto	650		KN-621
Prowler XT 650 4x4 Auto M4	650		KN-621
Prowler XT 650 H1	650		KN-621
2007 ARCTIC CAT			
250	249	KY-2504	
400 4x4	400	AC-4004	KN-138
		AC-4004	KN-138C
400 4x4 Auto	400	AC-4004	KN-138
		AC-4004	KN-138C
400 4x4 Auto LE	400	AC-4004	KN-138
		AC-4004	KN-138C
400 4x4 Auto TRV Plus	400	AC-4004	KN-138
		AC-4004	KN-138C
500 4x4	500	AC-4004	KN-138
		AC-4004	KN-138C
500 4x4 Auto	500	AC-4004	KN-138
		AC-4004	KN-138C
650 H1 4x4 Auto	641	AC-4004	KN-621
650 H1 4x4 Auto LE	641	AC-4004	KN-621
650 H1 4x4 Auto TBX	641	AC-4004	KN-621
650 H1 4x4 Auto TRV Plus	641	AC-4004	KN-621
650 H1 4x4 TRV Plus LE	650	AC-4004	KN-621
700 EFI 4x4 Auto	700		KN-621
700 EFI 4x4 Auto LE	700		KN-621
DVX400	400	SU-4002	KN-139
DVX400 TS	400	SU-4002	KN-139
Prowler XT 650 H1	650	AC-4004	KN-621
2006 ARCTIC CAT			
250	249	KY-2504	
400 4x4	400	AC-4004	KN-138
		AC-4004	KN-138C
400 4x4 Auto	400	AC-4004	KN-138
		AC-4004	KN-138C
400 4x4 Auto LE	400	AC-4004	KN-138
		AC-4004	KN-138C
400 4x4 Auto TBX	400	AC-4004	KN-138
		AC-4004	KN-138C
400 4x4 Auto TRV	400	AC-4004	KN-138
		AC-4004	KN-138C
400 4x4 Auto VP	400	AC-4096-1	KN-138
		AC-4096-1	KN-138C
400 4x4 VP	400	AC-4096-1	KN-138
		AC-4096-1	KN-138C
500 4x4	500	AC-4004	KN-138
		AC-4004	KN-138C
500 4x4 Auto	500	AC-4004	KN-138
		AC-4004	KN-138C
500 4x4 Auto LE	500	AC-4004	KN-138
		AC-4004	KN-138C
500 4x4 Auto TBX	500	AC-4004	KN-138
		AC-4004	KN-138C
500 4x4 Auto TRV	500	AC-4004	KN-138
2006 ARCTIC CAT			
500 4x4 Auto TRV	500	AC-4004	KN-138C
650 H1 4x4 SE	650	AC-6504	KN-621
650 V2 4x4	650	AC-6504	KN-204
		AC-6504	KN-204C
650 V2 4x4 LE TS	650	AC-6504	KN-204
		AC-6504	KN-204C
DVX400	400	SU-4002	KN-139
DVX400 TS	400	SU-4002	KN-139
Prowler XT 650 H1	650	AC-4004	KN-621
2005 ARCTIC CAT			
250 2x4	246	AC-3098	KN-132
300 4x4	280	AC-3098	KN-132
400 4x4	400	AC-4096-1	KN-138
		AC-4096-1	KN-138C
400 4x4 Auto	400	AC-4096-1	KN-138
		AC-4096-1	KN-138C
400 4x4 Auto LE	400	AC-4096-1	KN-138
		AC-4096-1	KN-138C
400 4x4 Auto TBX	400	AC-4096-1	KN-138
		AC-4096-1	KN-138C
400 4x4 Auto VP	400	AC-4096-1	KN-138
		AC-4096-1	KN-138C
400 4x4 VP	400	AC-4096-1	KN-138
		AC-4096-1	KN-138C
500 4x4	500	AC-4004	KN-138
		AC-4004	KN-138C
500 4x4 Auto	500	AC-4004	KN-138
		AC-4004	KN-138C
500 4x4 Auto LE	500	AC-4004	KN-138
		AC-4004	KN-138C
500 4x4 Auto TBX	500	AC-4004	KN-138
		AC-4004	KN-138C
500 4x4 Auto TRV	500		KN-138
			KN-138C
650 V2 4x4 Auto	650	AC-6504	KN-204
		AC-6504	KN-204C
650 V2 4x4 Auto LE	650	AC-6504	KN-204
		AC-6504	KN-204C
DVX400	400	SU-4002	KN-139
2004 ARCTIC CAT			
250 2x4	246	AC-3098	KN-132
300 4x4	280	AC-3098	KN-132
400	376	AC-4096-1	KN-138
		AC-4096-1	KN-138C
400 4x4	400	AC-4096-1	KN-138
		AC-4096-1	KN-138C
400 4x4 ACT	400	AC-4096-1	KN-138
		AC-4096-1	KN-138C
400 4x4 Auto	400	AC-4096-1	KN-138
		AC-4096-1	KN-138C
400 4x4 Auto ACT	400	AC-4096-1	KN-138
		AC-4096-1	KN-138C
400 4x4 Auto TBX	400	AC-4096-1	KN-138
		AC-4096-1	KN-138C
500 4x4	500		KN-138
			KN-138C
500 4x4 Auto	500		KN-138
			KN-138C
500 4x4 Auto TBX	500		KN-138
			KN-138C
500 4x4 Auto TRV	500		KN-138
			KN-138C
650 4x4 Auto	650	AC-6504	KN-204

*Indicates 2 filters required ♦ - Intake kit available - see page 80 Applications updated daily at knfilters.com

Vehicle	Engine Type	Air Filter	Oil Filter
2004 ARCTIC CAT			
650 4x4 Auto	650	AC-6504	KN-204C
650 4x4 Auto LE	650	AC-6504	KN-204
		AC-6504	KN-204C
650 V2 4x4 Auto	650		KN-204
			KN-204C
650 V2 4x4 Auto LE	650		KN-204
			KN-204C
DVX400	400	SU-4002	KN-139
2003 ARCTIC CAT			
250 2x4	246	AC-3098	KN-132
300 2x4	280	AC-3098	KN-132
400 4x4	400	AC-4096-1	KN-138
		AC-4096-1	KN-138C
400 4x4 ACT	400	AC-4096-1	KN-138
		AC-4096-1	KN-138C
400 4x4 Auto	400	AC-4096-1	KN-138
		AC-4096-1	KN-138C
400 4x4 Auto ACT	400	AC-4096-1	KN-138
		AC-4096-1	KN-138C
400 4x4 Auto MRP	400	AC-4096-1	KN-138
		AC-4096-1	KN-138C
500 4x4	500		KN-138
			KN-138C
500 4x4 Auto	500		KN-138
			KN-138C
500 4x4 Auto MRP	500		KN-138
			KN-138C
500 4x4 Auto TBX	500		KN-138
			KN-138C
2002 ARCTIC CAT			
250 2x4	246	AC-3098	KN-132
300 2x4	280	AC-3098	KN-132
375 2x4	376	AC-4096-1	KN-138
		AC-4096-1	KN-138C
400	371	AC-4096-1	KN-138
		AC-4096-1	KN-138C
400 4x4	400	AC-4096-1	KN-138
		AC-4096-1	KN-138C
500 4x4	487	AC-4096-1	KN-138
		AC-4096-1	KN-138C
500 4x4 Auto	500	AC-4096-1	KN-138
		AC-4096-1	KN-138C
500 4x4 Auto TBX	500	AC-4096-1	KN-138
		AC-4096-1	KN-138C
2001 ARCTIC CAT			
250 2x4	246	AC-3098	KN-132
300 2x4	280	AC-3098	KN-132
400 4x4	400	AC-4096-1	KN-138
		AC-4096-1	KN-138C
500 4x4 Auto	500	AC-4096-1	KN-138
		AC-4096-1	KN-138C
2000 ARCTIC CAT			
250 2x4	246	AC-3098	KN-132
300 2x4	280	AC-3098	KN-132
400	371	AC-4096-1	KN-138
		AC-4096-1	KN-138C
500 4x4	487	AC-4096-1	KN-138
		AC-4096-1	KN-138C
500 4x4 Auto	500	AC-4096-1	KN-138
		AC-4096-1	KN-138C

Vehicle	Engine Type	Air Filter	Oil Filter
1999 ARCTIC CAT			
250 2x4	246	AC-3098	KN-132
300 2x4	280	AC-3098	KN-132
400	371	AC-4096-1	KN-138
		AC-4096-1	KN-138C
500 4x4	487	AC-4096-1	KN-138
		AC-4096-1	KN-138C
1998 ARCTIC CAT			
300 2x4	280	AC-3098	KN-132
400	371	AC-4096-1	KN-138
		AC-4096-1	KN-138C
454 4x4	454	AC-4096-1	KN-138
		AC-4096-1	KN-138C
500 4x4	487	AC-4096-1	KN-138
		AC-4096-1	KN-138C
1997 ARCTIC CAT			
454 4x4	454	AC-4096-1	KN-138
		AC-4096-1	KN-138C
1996 ARCTIC CAT			
454 4x4	454	AC-4096-1	KN-138
		AC-4096-1	KN-138C
2003 ASIA			
Rocsta	1.8L L4 F/I	E-2790	
1991 ATK			
604 F/I	560	AT-6091	
2013 AUDI			
A1	1.4L L4 F/I	E-2997	
A3	2.0L L4 DSL - US	33-2865	
A3	2.0L L4 F/I - US	33-2865	
A4	2.0L L4 DSL	33-2945	
A4	2.0L L4 F/I	33-2945	
A4 Quattro	2.0L L4 F/I	33-2945	
A4 Quattro	3.0L V6 DSL	E-1987	
A4 Quattro	3.0L V6 F/I	E-1987	
A5	2.0L L4 DSL	33-2945	
A5	2.0L L4 F/I	33-2945	
A5	3.0L V6 DSL	E-1987	
A5	3.0L V6 F/I	E-1987	
A5 Quattro	2.0L L4 DSL	33-2945	
A5 Quattro	2.0L L4 F/I	33-2945	
A5 Quattro	3.0L V6 DSL	E-1987	
A6 Quattro	3.0L V6 DSL	E-1983	
A6 Quattro	3.0L V6 F/I	E-1983	
A7 Quattro	3.0L V6 DSL	E-1983	
A7 Quattro	3.0L V6 F/I	E-1983	HP-7015
A8 Quattro	3.0L V6 DSL	E-2999	
A8 Quattro	3.0L V6 F/I	E-2999	
A8 Quattro	4.2L V8 F/I	E-1996*	
Allroad Quattro	2.0L L4 F/I	33-2945	
Q5	2.0L L4 DSL	33-2945	
Q5	2.0L L4 F/I	33-2945	
Q5	3.2L V6 F/I	E-1987	HP-7015
Q7	3.0L V6 DSL	33-2857	
Q7	3.0L V6 F/I	33-2857	HP-7015
R8	4.2L V8 F/I	E-0668	
R8	5.2L V10 F/I	E-0669	
S4	3.0L V6 F/I	E-1987	HP-7015
S5	3.0L V6 F/I	E-1987	HP-7015
TT	2.0L L4 F/I	33-2865 ♦	
TT RS	2.5L L5 F/I	33-2384	
TTS	2.0L L4 F/I	33-2384	

*Indicates 2 filters required ♦ - Intake kit available - see page 80 Applications updated daily at knfilters.com

Vehicle	Engine Type	Air Filter	Oil Filter
2012 AUDI			
A1	1.2L L4 F/I	E-2997	
A1	1.4L L4 F/I	E-2997	
A1	1.6L L4 DSL	E-2997	
A3	2.0L L4 DSL	33-2865 ♦	
A3	2.0L L4 F/I	33-2865 ♦	
A3	3.0L V6 DSL	E-1987	
A4	1.8L L4 F/I	33-2945	
A4	2.0L L4 DSL	33-2945	
A4	2.0L L4 F/I	33-2945 ♦	
A4	3.0L V6 DSL	E-1987	
A4	3.0L V6 F/I	E-1987	
A4 Quattro	2.0L L4 F/I	33-2945	
A4 Quattro	3.0L V6 DSL	E-1987	
A4 Quattro	3.0L V6 F/I	E-1987	
A5	1.8L L4 F/I	33-2945	
A5	2.0L L4 DSL	33-2945	
A5	2.0L L4 F/I	33-2945	
A5	3.0L V6 DSL	E-1987	
A5	3.0L V6 F/I	E-1987	
A5 Quattro	2.0L L4 F/I	33-2945	
A5 Quattro	3.0L V6 DSL	E-1987	
A6	3.0L V6 DSL	E-1983	
A6	3.0L V6 F/I	E-1983	
A6 Quattro	3.0L V6 DSL	E-1983	
A6 Quattro	3.0L V6 F/I	E-1983	
A7	3.0L V6 DSL	E-1983	
A7 Quattro	3.0L V6 DSL	E-1983	
A7 Quattro	3.0L V6 F/I	E-1983	
A8 Quattro	3.0L V6 DSL	E-2999	
A8 Quattro	3.0L V6 F/I	E-2999	
A8 Quattro	4.2L V8 DSL	E-2999*	
A8 Quattro	4.2L V8 F/I	E-1996*	
Q3	2.0L L4 DSL	33-2865	
Q3	2.0L L4 F/I	33-2865	
Q5	2.0L L4 DSL	33-2945	
Q5	2.0L L4 F/I	33-2945	
Q5	3.0L V6 DSL	E-1987	
Q5	3.0L V6 F/I	E-1987	
Q5	3.2L V6 F/I	E-1987	
Q7	3.0L V6 DSL	33-2857	
Q7	3.0L V6 F/I	33-2857	
Q7	4.1L V8 DSL	33-2857*	
Q7	4.2L V8 DSL	33-2857*	
R8	4.2L V8 F/I	E-0668	
R8	5.2L V10 F/I	E-0669	
RS3	2.5L L5 F/I	33-2384	
S4	3.0L V6 F/I	E-1987	
S5	3.0L V6 F/I	E-1987	
S5	4.2L V8 F/I	E-1987	
TT	1.8L L4 F/I	33-2865 ♦	
TT	2.0L L4 DSL	33-2865 ♦	
TT	2.0L L4 F/I	33-2865 ♦	
TT Quattro	2.0L L4 F/I	33-2865	
TT RS	2.5L L5 F/I	33-2384	
TTS	2.0L L4 F/I	33-2384	
2011 AUDI			
A1	1.2L L4 F/I	E-2997	
A1	1.4L L4 F/I	E-2997	
A1	1.6L L4 DSL	E-2997	
A3	2.0L L4 DSL	33-2865 ♦	
A3	2.0L L4 F/I	33-2865 ♦	
A4	1.8L L4 F/I	33-2945	
A4	2.0L L4 DSL	33-2945	

Vehicle	Engine Type	Air Filter	Oil Filter
2011 AUDI			
A4	2.0L L4 F/I	33-2945 ♦	
A4	3.0L V6 DSL	E-1987	
A4	3.0L V6 F/I	E-1987	
A4	3.2L V6 F/I	E-1987	
A4 Quattro	2.0L L4 F/I	33-2945	
A5	2.0L L4 DSL	33-2945	
A5	2.0L L4 F/I	33-2945	
A5	2.7L V6 DSL	E-1987	
A5	3.0L V6 DSL	E-1987	
A5 Quattro	2.0L L4 F/I	33-2945	
A5 Quattro	3.2L V6 F/I	E-1987	
A6	2.0L L4 DSL - 4F, C6 models	E-9282	
A6	2.0L L4 F/I - 4F, C6 models	E-9282	
A6	3.0L V6 DSL - from 9/11	E-1983	
A6 Quattro	3.0L V6 DSL - from 9/11	E-1983	
A6 Quattro	3.0L V6 F/I		HP-7015
A6 Quattro	3.0L V6 F/I - from 9/11	E-1983	HP-7015
A6 Quattro	4.2L V8 F/I	E-0778	
A8 Quattro	4.2L V8 DSL	E-2999*	
A8 Quattro	4.2L V8 F/I	E-1996*	
Q5	2.0L L4 DSL	33-2945	
Q5	2.0L L4 F/I	33-2945	
Q5	3.0L V6 DSL	E-1987	
Q5	3.2L V6 F/I	E-1987	HP-7015
Q7	3.0L V6 DSL	33-2857	
Q7	3.0L V6 F/I	33-2857	HP-7015
Q7	4.2L V8 DSL	33-2857*	
Q7	6.0L V12 DSL	33-2857*	
R8	4.2L V8 F/I	E-0668	
R8	5.2L V10 F/I	E-0669	
RS3	2.5L L5 F/I	33-2384	
S4	3.0L V6 F/I	E-1987	HP-7015
S5	3.0L V6 F/I	E-1987	HP-7015
S5	4.2L V8 F/I	E-1987	
S6	5.2L V10 F/I	E-2996*	
TT	2.0L L4 DSL	33-2865 ♦	
TT	2.0L L4 F/I	33-2865 ♦	
TT Quattro	2.0L L4 F/I	33-2865	
		33-2865 ♦	
TT Quattro	3.2L V6 F/I	33-2384	
TT RS	2.5L L5 F/I	33-2384	
TTS	2.0L L4 F/I	33-2384	
2010 AUDI			
A1	1.4L L4 F/I	E-2997	
A3	2.0L L4 DSL	33-2865 ♦	
A3	2.0L L4 F/I	33-2865 ♦	
A4	1.8L L4 F/I	33-2945	
A4	2.0L L4 DSL	33-2945	
A4	2.0L L4 F/I	33-2945 ♦	
A4	2.7L V6 DSL	E-1987	
A4	3.0L V6 DSL	E-1987	
A4	3.0L V6 F/I	E-1987	
A4	3.2L V6 F/I	E-1987	
A4 Cabriolet	2.0L L4 F/I	33-2209 ♦	
A4 Quattro	2.0L L4 F/I	33-2945	
A5	2.0L L4 DSL	33-2945	
A5	2.0L L4 F/I - Non-US	33-2945	
A5	3.2L V6 F/I	E-1987	HP-7015
A5 Quattro	3.2L V6 F/I	E-1987	HP-7015
A6	2.0L L4 DSL	E-9282	
A6	2.0L L4 F/I	E-9282	

*Indicates 2 filters required ♦ - Intake kit available - see page 80 Applications updated daily at knfilters.com

AIR & OIL FILTERS

Vehicle	Engine Type	Air Filter	Oil Filter
2010 AUDI			
A6	3.0L V6 DSL	E-0778	
A6	3.0L V6 F/I	E-0778	HP-7015
A6 Quattro	3.0L V6 F/I		HP-7015
A6 Quattro	4.2L V8 F/I	E-0778	
A8	6.0L W12 F/I	E-1992*	
A8 Quattro	4.2L V8 DSL - 351BHP	E-2999*	
A8 Quattro	4.2L V8 DSL - Exc., 351BHP	E-0775*	
A8 Quattro	4.2L V8 F/I	E-0775	
A8 Quattro	4.2L V8 F/I - 371BHP	E-1996*	
A8 Quattro	4.2L V8 F/I - Exc., 371BHP	E-0775	
A8 Quattro	6.0L W12 F/I	E-1992*	
Q5	2.0L L4 DSL	33-2945	
Q5	2.0L L4 F/I	33-2945	
Q5	3.0L V6 DSL	E-1987	
Q5	3.2L V6 F/I	E-1987	HP-7015
Q7	3.0L V6 DSL	33-2857	
Q7	3.0L V6 F/I	33-2857	
Q7	3.6L V6 F/I	33-2857	HP-7005
Q7	4.2L V8 DSL	33-2857*	
Q7	4.2L V8 F/I	33-2857	
Q7	6.0L V12 DSL	33-2857*	
R8	4.2L V8 F/I	E-0668	
R8	5.2L V10 F/I	E-0669	
S4	3.0L V6 F/I	E-1987	HP-7015
S5	3.0L V6 F/I	E-1987	HP-7015
S5	4.2L V8 F/I	E-1987	
S6	5.2L V10 F/I	E-2996*	
S8	5.2L V10 F/I	E-1992*	
TT	2.0L L4 DSL	33-2865 ♦	
TT	2.0L L4 F/I	33-2865 ♦	
TT Quattro	2.0L L4 F/I	33-2865	
		33-2865 ♦	
TT Quattro	3.2L V6 F/I	33-2384	
TT RS	2.5L L5 F/I	33-2384	
TTS	2.0L L4 F/I	33-2384	
2009 AUDI			
A3	2.0L L4 DSL	33-2865 ♦	
A3	3.2L V6 F/I	33-2384 ♦	
A4	1.8L L4 F/I	33-2945	
A4	2.0L L4 DSL	33-2945	
A4	2.0L L4 F/I	33-2945 ♦	
A4	2.7L V6 DSL	E-1987	
A4	3.0L V6 DSL	E-1987	
A4	3.0L V6 F/I	E-1987	
A4 Quattro	2.0L L4 F/I	33-2945 ♦	
A4 Quattro	3.2L V6 F/I	E-1987	HP-7015
A4 Quattro Cabriolet	3.2L V6 F/I	33-2209	HP-7015
A5	2.0L L4 DSL	33-2945	
A5	2.0L L4 F/I	33-2945	
A5	3.2L V6 F/I		HP-7015
A5 Quattro	3.2L V6 F/I	E-1987	HP-7015
A6	2.0L L4 DSL	E-9282	
A6	2.0L L4 F/I	E-9282	
A6	3.0L V6 DSL	E-0778	
A6	3.0L V6 F/I	E-0778	
A6 Quattro	3.0L V6 F/I		HP-7015
A6 Quattro	3.2L V6 F/I		HP-7015
A6 Quattro	4.2L V8 F/I	E-0778	
A8 Quattro	4.2L V8 DSL	E-0775*	
A8 Quattro	4.2L V8 F/I	E-0775	
A8 Quattro	6.0L W12 F/I	E-1992*	
Q5	2.0L L4 DSL	33-2945	

Vehicle	Engine Type	Air Filter	Oil Filter
2009 AUDI			
Q5	2.0L L4 F/I	33-2945	
Q5	3.2L V6 F/I	E-1987	HP-7015
Q7	3.0L V6 DSL	33-2857	
Q7	3.6L V6 F/I	33-2857	HP-7005
Q7	4.2L V8 DSL	33-2857*	
Q7	4.2L V8 F/I	33-2857*	
R8	4.2L V8 F/I	E-0668	
R8	5.2L V10 F/I	E-0669	
RS4	4.2L V8 F/I - US	33-2209	
S4	3.0L V6 F/I	E-1987	
S4	4.2L V8 F/I - US	33-2209	
S5	4.2L V8 F/I	E-1987	
S6	5.2L V10 F/I	E-2996*	
S8	5.2L V10 F/I	E-1992*	
TT	2.0L L4 DSL	33-2865 ♦	
TT Quattro	2.0L L4 F/I	33-2865	
TT Quattro	3.2L V6 F/I	33-2384	
2008 AUDI			
A3	1.4L L4 F/I	E-2014 ♦	
A3	1.8L L4 F/I	33-2865 ♦	
A3	2.0L L4 DSL	33-2865 ♦	
A3	3.2L V6 F/I	33-2384* ♦	
A3	3.2L V6 F/I - Non-US	33-2878 ♦	
A4	1.8L L4 F/I	33-2945	
A4	2.0L L4 DSL	33-2945	
A4	3.0L V6 DSL	E-1987	
A4	3.0L V6 F/I	33-2209	
A4	3.2L V6 F/I	33-2209	HP-7015
A4	4.2L V8 F/I	E-1987	
A4 Quattro	3.2L V6 F/I		HP-7015
A4 Quattro	3.2L V6 F/I - Non-US	E-1987	HP-7015
A4 Quattro	3.2L V6 F/I - US	33-2209	HP-7015
A5	3.2L V6 F/I	E-1987	HP-7015
A5 Quattro	3.2L V6 F/I		HP-7015
A5 Quattro	3.2L V6 F/I - Non-US	E-1987	HP-7015
A6	2.0L L4 DSL	E-9282	
A6	3.0L V6 DSL	E-0778	
A6	3.0L V6 F/I	E-0778	
A6	3.2L V6 F/I	E-0778	HP-7015
A6 Quattro	3.2L V6 F/I	E-0778	HP-7015
A6 Quattro	4.2L V8 F/I	E-0778	
A8 Quattro	4.2L V8 DSL	E-0775*	
A8 Quattro	4.2L V8 F/I	E-0775	
A8 Quattro	6.0L W12 F/I - Non-US	E-1992*	
Q7	3.0L V6 DSL	33-2857	
Q7	3.6L V6 F/I	33-2857	HP-7005
Q7	4.2L V8 DSL	33-2857*	
Q7	4.2L V8 F/I	33-2857	
R8	4.2L V8 F/I	E-0668	
RS4	4.2L V8 F/I	33-2209	
S4	4.2L V8 F/I	33-2209	
S5	4.2L V8 F/I	E-1987	
S6	5.2L V10 F/I	E-2996*	
S8	5.2L V10 F/I - Non-US	E-1992*	
S8	5.2L V10 F/I - US	E-0775*	
TT	1.8L L4 F/I	33-2865 ♦	
TT	2.0L L4 DSL	33-2865 ♦	
TT Quattro	3.2L V6 F/I - Non-US	33-2878	
TT Quattro	3.2L V6 F/I - US	33-2384	
2007 AUDI			
A3	1.8L L4 F/I	33-2865 ♦	
A3	2.0L L4 DSL	33-2865 ♦	
A3	2.0L L4 F/I - exc. Turbo	E-2014 ♦	

*Indicates 2 filters required ♦ - Intake kit available - see page 80 Applications updated daily at knfilters.com

Vehicle	Engine Type	Air Filter	Oil Filter
2007 AUDI			
A3	3.2L V6 F/I - Non-US	33-2878 ♦	
A3	3.2L V6 F/I - US	33-2384 ♦	
A4	1.8L L4 F/I - 163BHP	33-2209	
A4	1.8L L4 F/I - Exc., 163BHP	33-2945	
A4	2.0L L4 DSL	33-2209	
A4	3.0L V6 DSL	33-2209	
A4	3.0L V6 F/I	33-2209	
A4	3.2L V6 F/I	33-2209	HP-7015
A4 Quattro	3.2L V6 F/I	33-2209	HP-7015
A6	3.2L V6 F/I	E-0778	HP-7015
A6 Quattro	3.2L V6 F/I	E-0778	HP-7015
A6 Quattro	4.2L V8 F/I	E-0778	
A8	6.0L W12 F/I	E-1992*	
A8 Quattro	4.2L V8 DSL	E-0775*	
A8 Quattro	4.2L V8 F/I	E-0775	
A8 Quattro	6.0L W12 F/I - Non-US	E-1992*	
A8 Quattro	6.0L W12 F/I - US	E-0775*	
Q7	3.0L V6 DSL	33-2857	
Q7	3.6L V6 F/I	33-2857	HP-7005
Q7	4.2L V8 DSL	33-2857*	
Q7	4.2L V8 F/I	33-2857*	
RS4	4.2L V8 F/I	33-2209	
S4	4.2L V8 F/I	33-2209	
S6	5.2L V10 F/I	E-2996*	
S8	5.2L V10 F/I	E-1992*	
TT	1.8L L4 F/I	33-2128	
TT Quattro	3.2L V6 F/I - Non-US	33-2878	
TT Quattro	3.2L V6 F/I - US	33-2857	
2006 AUDI			
A3	2.0L L4 DSL	33-2865 ♦	
A3	2.0L L4 F/I - exc. Turbo	E-2014 ♦	
A3	3.2L V6 F/I - Non-US	33-2878 ♦	
A4	1.8L L4 F/I	33-2209	HP-3001
A4	2.0L L4 DSL	33-2209	
A4	3.2L V6 F/I	33-2209	HP-7015
A4 Quattro	3.0L V6 F/I	33-2209	
A4 Quattro	3.2L V6 F/I	33-2209	HP-7015
A6	2.0L L4 DSL	E-9282	
A6	3.2L V6 F/I	E-0778	HP-7015
A6 Quattro	3.2L V6 F/I	E-0778	HP-7015
A6 Quattro	4.2L V8 F/I	E-0778	
A8 Quattro	4.2L V8 DSL	E-0775*	
A8 Quattro	4.2L V8 F/I	E-0775	
A8 Quattro	6.0L W12 F/I - Non-US	E-1992*	
A8 Quattro	6.0L W12 F/I - US	E-0775*	
RS4	4.2L V8 F/I	33-2209	
S4	4.2L V8 F/I	33-2209	
S6	5.2L V10 F/I	E-2996*	
S8	5.2L V10 F/I	E-1992*	
TT	1.8L L4 F/I	33-2128 ♦	HP-2005
TT Quattro	1.8L L4 F/I	33-2128 ♦	HP-2005
TT Quattro	3.2L V6 F/I - Non-US, BHE Eng.	33-2128	
TT Quattro	3.2L V6 F/I - Non-US, BUB Eng.	33-2878	
TT Quattro	3.2L V6 F/I - US	33-2857	
2005 AUDI			
A4	1.8L L4 F/I	33-2209	HP-3001
A4	2.0L L4 DSL	33-2209	
A4	3.0L V6 DSL	33-2209	
A4	3.0L V6 F/I	33-2209	
A4	3.2L V6 F/I	33-2209	HP-7015
A4 Quattro	1.8L L4 F/I	33-2209	HP-3001
A4 Quattro	3.0L V6 F/I	33-2209	
A4 Quattro	3.2L V6 F/I	33-2209	HP-7015
A6 Quattro	3.2L V6 F/I	E-0778	HP-7015
A6 Quattro	4.2L V8 F/I	E-0778	
A8 Quattro	4.2L V8 DSL	E-0775*	
A8 Quattro	4.2L V8 F/I	E-0775	
A8 Quattro	6.0L W12 F/I - Non-US	E-1992*	
A8 Quattro	6.0L W12 F/I - US	E-0775*	
Allroad Quattro	2.7L V6 F/I	33-2125	
Allroad Quattro	4.2L V8 F/I	33-2125	
RS4	4.2L V8 F/I	33-2209	
S4	4.2L V8 F/I	33-2209	
S6	4.2L V8 F/I	E-0778	
TT	1.8L L4 F/I	33-2128 ♦	HP-2005
TT Quattro	1.8L L4 F/I	33-2128 ♦	HP-2005
TT Quattro	3.2L V6 F/I - Non-US	33-2128	
TT Quattro	3.2L V6 F/I - US	33-2857	
2004 AUDI			
A3	2.0L L4 DSL	33-2865 ♦	
A3	2.0L L4 F/I - exc. Turbo	E-2014 ♦	
A3	3.2L V6 F/I	33-2878 ♦	
A4	1.6L L4 F/I	33-2209	
A4	1.8L L4 F/I	33-2209 ♦	HP-3001
A4	1.9L L4 DSL	33-2209 ♦	
A4	2.0L L4 DSL	33-2209	
A4	2.0L L4 F/I	33-2209	
A4	2.4L V6 F/I	33-2209	
A4	3.0L V6 DSL	33-2209	
A4	3.0L V6 F/I	33-2209	
A4 Quattro	1.8L L4 F/I	33-2209	HP-3001
A4 Quattro	3.0L V6 F/I	33-2209	
A6	2.7L V6 DSL	E-0778	
A6	2.7L V6 F/I	33-2125	
A6	3.0L V6 DSL	E-0778	
A6	3.0L V6 F/I - Non-US, from 4/04	E-0778	
A6	3.0L V6 F/I - US	33-2125	
A6 Quattro	2.7L V6 F/I	33-2125	
A6 Quattro	3.0L V6 F/I	33-2125	
A6 Quattro	4.2L V8 F/I - exc. RS6	33-2125	
A6 Quattro	4.2L V8 F/I - RS6	33-2866*	
A6 Quattro	4.2L V8 F/I - US	33-2125	
A8	4.2L V8 F/I	E-0775	
A8 Quattro	4.2L V8 F/I	E-0775	
A8 Quattro	6.0L W12 F/I	E-1992*	
Allroad Quattro	2.7L V6 F/I	33-2125	
Allroad Quattro	4.2L V8 F/I	33-2125	
Cabriolet	3.0L V6 F/I	33-2209	
RS6	4.2L V8 F/I	33-2866*	HP-2005
S4	4.2L V8 F/I	33-2209	
S8	4.2L V8 F/I	33-2779	
TT	1.8L L4 F/I	33-2128 ♦	HP-2005
TT Quattro	1.8L L4 F/I	33-2128 ♦	HP-2005
TT Quattro	3.2L V6 F/I	33-2128	
2003 AUDI			
A3	1.6L L4 F/I - from 6/03, exc. FSi	E-2014 ♦	
A3	1.6L L4 F/I - to 5/03	33-2128 ♦	
A3	1.8L L4 F/I	33-2128 ♦	HP-2005
A3	2.0L L4 DSL	33-2865 ♦	
A3	2.0L L4 F/I	E-2014 ♦	
A4	1.6L L4 F/I	33-2209	
A4	1.8L L4 F/I	33-2209 ♦	HP-3001
A4	2.0L L4 F/I	33-2209	

*Indicates 2 filters required ♦ - Intake kit available - see page 80 Applications updated daily at knfilters.com

AIR & OIL FILTERS

Vehicle	Engine Type	Air Filter	Oil Filter
2003 AUDI			
A4	3.0L V6 F/I	33-2209	
A4 Quattro	1.8L L4 F/I	33-2209	HP-3001
A4 Quattro	3.0L V6 F/I	33-2209	
A6	2.7L V6 F/I	33-2125	
A6	3.0L V6 F/I	33-2125	
A6 Quattro	2.7L V6 F/I	33-2125	
A6 Quattro	3.0L V6 F/I	33-2125	
A6 Quattro	4.2L V8 F/I - Non-US, exc. RS6	33-2125	
A6 Quattro	4.2L V8 F/I - Non-US, RS6	33-2866*	
A6 Quattro	4.2L V8 F/I - US	33-2125	
A8 Quattro	4.2L V8 F/I	33-2779	
Allroad Quattro	2.7L V6 F/I	33-2125	
RS4	2.7L V6 F/I	33-2125 ♦	
RS6	4.2L V8 F/I	33-2866*	HP-2005
S3	1.8L L4 F/I	33-2128 ♦	
S4	4.2L V8 F/I	33-2209	
S6	4.2L V8 F/I	33-2125	
S8	4.2L V8 F/I	33-2779	HP-7005
TT	1.8L L4 F/I	33-2128 ♦	HP-2005
TT Quattro	1.8L L4 F/I	33-2128 ♦	HP-2005
TT Quattro	3.2L V6 F/I	33-2128	
2002 AUDI			
A3	1.8L L4 F/I	33-2128 ♦	HP-2005
A3	1.9L L4 DSL	33-2128	
A4	1.8L L4 F/I	33-2209 ♦	HP-3001
A4	1.9L L4 DSL	33-2209 ♦	
A4	2.0L L4 F/I	33-2209	
A4	3.0L V6 F/I	33-2209	
A4 Quattro	1.8L L4 F/I	33-2209	HP-3001
A4 Quattro	3.0L V6 F/I	33-2209	
A6	2.7L V6 F/I	33-2125	
A6	3.0L V6 F/I	33-2125	
A6 Quattro	2.7L V6 F/I	33-2125	
A6 Quattro	3.0L V6 F/I	33-2125	
A6 Quattro	4.2L V8 F/I - Non-US, exc. RS6	33-2125	
A6 Quattro	4.2L V8 F/I - Non-US, RS6	33-2866*	
A6 Quattro	4.2L V8 F/I - US	33-2125	
A8 Quattro	4.2L V8 F/I	33-2779	
A8 Quattro	4.2L V8 F/I - ABZ Eng.	33-2779	HP-7005
Allroad Quattro	2.7L V6 F/I	33-2125	
RS4	2.7L V6 F/I	33-2125 ♦	
S3	1.8L L4 F/I	33-2128 ♦	
S4	2.7L V6 F/I	33-2125	
S6	4.2L V8 F/I	33-2125	
S8	4.2L V8 F/I	33-2779	HP-7005
TT	1.8L L4 F/I	33-2128 ♦	HP-2005
TT Quattro	1.8L L4 F/I	33-2128 ♦	HP-2005
2001 AUDI			
A3	1.8L L4 F/I	33-2128 ♦	HP-2005
A3	1.9L L4 DSL	33-2128	
A4	1.8L L4 F/I	33-2125	HP-3001
		33-2125 ♦	HP-3001
A4	2.0L L4 F/I	33-2209	
A4	2.8L V6 F/I	33-2125 ♦	
A4 Quattro	1.8L L4 F/I	33-2125	HP-3001
A4 Quattro	2.8L V6 F/I	33-2125	
A6	2.7L V6 F/I	33-2125	
A6	2.8L V6 F/I	33-2125 ♦	
A6 Quattro	2.7L V6 F/I	33-2125	
A6 Quattro	2.8L V6 F/I	33-2125 ♦	
2001 AUDI			
A6 Quattro	3.0L V6 F/I	33-2125	
A6 Quattro	4.2L V8 F/I	33-2125	
A8 Quattro	4.2L V8 F/I	33-2779	
A8 Quattro	4.2L V8 F/I - ABZ Eng.	33-2779	HP-7005
Allroad Quattro	2.7L V6 F/I	33-2125	
RS4	2.7L V6 F/I	33-2125 ♦	
S3	1.8L L4 F/I	33-2128 ♦	
S4	2.7L V6 F/I	33-2125 ♦	
S8	4.2L V8 F/I	33-2779	HP-7005
TT	1.8L L4 F/I	33-2128 ♦	HP-2005
TT Quattro	1.8L L4 F/I	33-2128 ♦	HP-2005
2000 AUDI			
A3	1.8L L4 F/I	33-2128 ♦	HP-2005
A4	1.8L L4 F/I	33-2125	HP-3001
		33-2125 ♦	HP-3001
A4	2.8L V6 F/I	33-2125 ♦	
A4 Quattro	1.8L L4 F/I	33-2125	HP-3001
A4 Quattro	2.8L V6 F/I	33-2125	
A6	2.7L V6 F/I	33-2125	
A6	2.8L V6 F/I	33-2125 ♦	
A6 Quattro	2.7L V6 F/I	33-2125	
A6 Quattro	2.8L V6 F/I	33-2125 ♦	
A6 Quattro	4.2L V8 F/I	33-2125	
A8 Quattro	4.2L V8 F/I	33-2779	
A8 Quattro	4.2L V8 F/I - ABZ Eng.	33-2779	HP-7005
RS4	2.7L V6 F/I	33-2125 ♦	
S3	1.8L L4 F/I	33-2128 ♦	
S4	2.7L V6 F/I	33-2125 ♦	
TT	1.8L L4 F/I	33-2128 ♦	HP-2005
TT Quattro	1.8L L4 F/I	33-2128 ♦	HP-2005
1999 AUDI			
A3	1.8L L4 F/I	33-2128 ♦	HP-2005
A4	1.8L L4 F/I	33-2125	HP-3001
		33-2125 ♦	HP-3001
A4	2.8L V6 F/I	33-2125 ♦	
A4 Quattro	1.8L L4 F/I	33-2125 ♦	HP-3001
		33-2125 ♦	HP-3001
A4 Quattro	2.8L V6 F/I	33-2125 ♦	
A6	2.8L V6 F/I	33-2125 ♦	
A6 Quattro	2.8L V6 F/I	33-2125 ♦	
A8 Quattro	4.2L V8 F/I	33-2779	
S4	2.7L V6 F/I	33-2125 ♦	
TT	1.8L L4 F/I	33-2128 ♦	
1998 AUDI			
A3	1.8L L4 F/I	33-2128 ♦	HP-2005
A4	1.8L L4 F/I	33-2125	HP-3001
		33-2125 ♦	HP-3001
A4	2.8L V6 F/I	33-2125 ♦	HP-3001
A4 Quattro	1.8L L4 F/I	33-2125 ♦	HP-3001
		33-2125 ♦	HP-3001
A4 Quattro	2.8L V6 F/I	33-2125 ♦	HP-3001
A6	2.8L V6 F/I		HP-3001
A6	2.8L V6 F/I - AFC Eng.	33-2029 ♦	HP-3001
A6	2.8L V6 F/I - AHA Eng.	33-2125 ♦	HP-3001
A6 Quattro	2.8L V6 F/I		HP-3001
A6 Quattro	2.8L V6 F/I - Sedan	33-2125 ♦	HP-3001
A6 Quattro	2.8L V6 F/I - Wagon	33-2029 ♦	HP-3001
A8 Quattro	4.2L V8 F/I	33-2779	
S4	2.7L V6 F/I	33-2125 ♦	
TT	1.8L L4 F/I	33-2128	
1997 AUDI			
A3	1.8L L4 F/I	33-2128 ♦	

*Indicates 2 filters required ♦ - Intake kit available - see page 80 Applications updated daily at knfilters.com

Partial Listing - Complete List of Vehicles and Applications at knfilters.com

Vehicle	Engine Type	Air Filter	Oil Filter
1997 AUDI			
A3	1.9L L4 DSL	33-2128	
A4	1.8L L4 F/I	33-2125	HP-3001
		33-2125 ♦	HP-3001
A4	2.6L V6 F/I	33-2125	
A4	2.8L V6 F/I	33-2125 ♦	HP-3001
A4 Quattro	1.8L L4 F/I	33-2125 ♦	HP-3001
		33-2125 ♦	HP-3001
A4 Quattro	2.8L V6 F/I	33-2125 ♦	HP-3001
A6 Quattro	2.8L V6 F/I	33-2029 ♦	HP-3001
A8 Quattro	4.2L V8 F/I	33-2779	
1996 AUDI			
A4	2.6L V6 F/I	33-2125	
A4	2.8L V6 F/I	33-2125 ♦	HP-3001
A4 Quattro	2.8L V6 F/I	33-2125 ♦	HP-3001
A6 Quattro	2.8L V6 F/I	33-2029	HP-3001
RS2	2.2L L4 F/I	33-2768	
1995 AUDI			
90 Quattro	2.8L V6 F/I	33-2029	HP-3001
A6 Quattro	2.8L V6 F/I	33-2029	HP-3001
S6	2.2L L5 F/I	33-2029	HP-2005
1994 AUDI			
80	2.0L L4 F/I - 16v	33-2001	
80	2.0L L4 F/I - exc. 16v	33-2029	
90 Quattro	2.8L V6 F/I	33-2029	HP-2005
S4	2.2L L5 F/I	33-2029	HP-2005
1993 AUDI			
90	2.8L V6 F/I	33-2029	HP-2005
90 Quattro	2.8L V6 F/I	33-2029	HP-2005
100	2.8L V6 F/I	33-2029	HP-2005
100 Quattro	2.8L V6 F/I	33-2029	HP-2005
S2	2.2L L5 F/I	33-2768	
S4	2.2L L5 F/I	33-2029	HP-2005
1992 AUDI			
100 Quattro	2.8L V6 F/I	33-2029	HP-2005
S4	2.2L L5 F/I	33-2029	HP-2005
1991 AUDI			
90 Quattro	2.3L L5 F/I		HP-2005
90 Quattro	2.3L L5 F/I - US	33-2001	HP-2005
200 Quattro	2.2L L5 F/I		HP-2005
200 Quattro	2.2L L5 F/I - 10v	33-2003	HP-2005
200 Quattro	2.2L L5 F/I - 20v	33-2768	HP-2005
Coupe Quattro	2.3L L5 F/I	33-2001	HP-2005
1990 AUDI			
80 Quattro	2.3L L5 F/I	33-2001	HP-2005
90 Quattro	2.3L L5 F/I		HP-2005
90 Quattro	2.3L L5 F/I - US	33-2001	HP-2005
100	2.3L L5 F/I	33-2003	HP-2005
100 Quattro	2.3L L5 F/I	33-2003	HP-2005
200 Quattro	2.2L L5 F/I	33-2003	HP-2005
Coupe Quattro	2.3L L5 F/I	33-2001	HP-2005
V8 Quattro	3.6L V8 F/I	33-2573	
1989 AUDI			
200 Quattro	2.2L L5 F/I	33-2003	HP-2005
1988 AUDI			
5000 Quattro	2.2L L5 F/I	33-2003	HP-2005
1987 AUDI			
Coupe	2.2L L5 F/I	33-2001	HP-2005

Vehicle	Engine Type	Air Filter	Oil Filter
1986 AUDI			
4000 Quattro	2.2L L5 F/I	33-2001	HP-2005
5000 Quattro	2.2L L5 F/I	33-2003	HP-2005
1979 AUDI			
5000	2.2L L5 F/I	33-2003	HP-2005
1970 AUSTIN			
America	78 L4 CARB	E-2600	HP-1002
1969 AUSTIN			
America	78 L4 CARB	E-2600	
1965 AUSTIN			
Sprite	1.1L L4 CARB	E-2230	
1967 AUSTIN HEALEY			
Sprite	78 L4 CARB	E-2230	
1963 AUSTIN HEALEY			
Sprite	67 L4 CARB	E-2230	
1962 AUSTIN HEALEY			
Sprite	67 L4 CARB	E-2230	
2011 BAJAJ			
Pulsar 150	150	BA-2201	
Pulsar 180	180	BA-2201	
Pulsar 220	220	BA-2201	
2010 BAJAJ			
Pulsar 150	150	BA-2201	
Pulsar 180	180	BA-2201	
Pulsar 220	220	BA-2201	
2009 BAJAJ			
Pulsar 150	150	BA-2201	
Pulsar 180	180	BA-2201	
Pulsar 200	200	BA-2201	
Pulsar 220	220	BA-2201	
2008 BAJAJ			
Pulsar 150	150	BA-2201	
Pulsar 180	180	BA-2201	
Pulsar 200	200	BA-2201	
Pulsar 220	220	BA-2201	
2007 BAJAJ			
Pulsar 150	150	BA-2201	
Pulsar 180	180	BA-2201	
Pulsar 200	200	BA-2201	
Pulsar 220	220	BA-2201	
2006 BAJAJ			
Pulsar 150	150	BA-2201	
2005 BAJAJ			
Pulsar 150	150	BA-1801	
2000 BENTLEY			
Arnage	4.4L V8 F/I		HP-7006
1991 BENTLEY			
Mulsanne	6.7L V8 F/I	33-2543	
1987 BERTONE			
X1/9	1.5L L4 F/I		HP-2004
2010 BETAMOTOR			
Evo 4T	250		KN-207
2013 BMW			
128i	3.0L L6 F/I	33-2332	
135i	3.0L L6 F/I	33-2458	

*Indicates 2 filters required ♦ - Intake kit available - see page 80 Applications updated daily at knfilters.com

AIR & OIL FILTERS

Vehicle	Engine Type	Air Filter	Oil Filter
2013 BMW			
328i	2.0L L4 F/I	33-2990	
328i xDrive	2.0L L4 F/I	33-2990	
335i	3.0L L6 F/I	33-2997	
335i xDrive	3.0L L6 F/I	33-2997	
528i xDrive	2.0L L4 F/I	33-2963	
535i	3.0L L6 F/I	33-2428	
535i GT	3.0L L6 F/I	33-2428	
535i GT xDrive	3.0L L6 F/I	33-2428	
535i xDrive	3.0L L6 F/I	33-2428	
F800GS	798	BM-8006	KN-164
M3	4.0L V8 F/I	E-2994	
S1000RR	990	BM-1010	KN-160
S1000RR	990 - Race Specific	BM-1010R	KN-160
X1 16d	2.0L L4 DSL	33-2942	
X1 18d	2.0L L4 DSL	33-2942	
X1 20d	2.0L L4 DSL	33-2942	
X1 20i	2.0L L4 F/I	33-2963	
X1 25d	2.0L L4 DSL	33-2942	
X1 28i	2.0L L4 F/I	33-2963	
X1 xDrive28i	2.0L L4 F/I	33-2963	
X5 M	4.4L V8 F/I	33-2449	
X5 xDrive35d	3.0L L6 DSL	33-2959	
X6 M	4.4L V8 F/I	33-2449	
Z4	3.0L L6 F/I	33-2367	
Z4 20i	2.0L L4 F/I	33-2963	
Z4 28i	2.0L L4 F/I	33-2963	
2012 BMW			
116D	2.0L L4 DSL	33-2990	
116i	1.6L L4 F/I	33-2990	
118d	2.0L L4 DSL	33-2990	
118i	1.6L L4 F/I	33-2990	
125d	2.0L L4 DSL	33-2990	
125i	2.0L L4 F/I	33-2990	
316D	2.0L L4 DSL - Exc. F30/F31	33-2942 ♦	
316D	2.0L L4 DSL - F30/F31	33-2990 ♦	
316i	1.6L L4 F/I - E90/91/92/93, exc. N45N eng.	RC-9350	
316i	1.6L L4 F/I - F30/F31	33-2990	
316i	1.6L L4 F/I - N45N Eng	E-2021	
318D	2.0L L4 DSL - Exc. F30/F31	33-2942 ♦	
318D	2.0L L4 DSL - F30/F31	33-2990 ♦	
318i	2.0L L4 F/I	E-2021	
320D	2.0L L4 DSL - Exc. F30/F31	33-2942 ♦	
320D	2.0L L4 DSL - F30/F31	33-2990 ♦	
320i	2.0L L4 F/I - Exc. F30/F31	E-2021	
320i	2.0L L4 F/I - F30/F31	33-2990	
325i	3.0L L6 F/I - E90/91/92/93	33-2332	
328i	2.0L L4 F/I - Non-US	33-2990	
328i	2.0L L4 F/I - US, F30	33-2990	
330D	3.0L L6 DSL	33-2942	
330i	3.0L L6 F/I - E90/91/92/93	33-2332	
335d	3.0L L6 DSL	33-2942	
335is	3.0L L6 F/I	33-2367	
520i	2.0L L4 F/I	33-2963	
528i	2.0L L4 F/I	33-2963	
528i xDrive	2.0L L4 F/I	33-2963	
530i	3.0L L6 F/I	33-2970	
F650GS	652	BM-8006	KN-164
F800GS	798	BM-8006	KN-164
F800R	798	BM-8006	KN-164

Vehicle	Engine Type	Air Filter	Oil Filter
2012 BMW			
F800ST	798	BM-8006	
G650GS	650	BM-6501	KN-151
G650GS Sertao	650	BM-6501	KN-151
K1300S	1300	BM-1205	KN-160
K1600 GT	1600	BM-1611	
K1600 GTL	1600	BM-1611	
M3	4.0L V8 F/I	E-2994	
R1200GS	1200	BM-1204	KN-164
R1200GS Adventure	1200	BM-1204	KN-164
R1200RT	1200	BM-1204	KN-164
S1000RR	990	BM-1010	KN-160
S1000RR	990 - Race Specific	BM-1010R	KN-160
X1 16d	2.0L L4 DSL	33-2942	
X1 18d	2.0L L4 DSL	33-2942 ♦	
X1 20d	2.0L L4 DSL	33-2942 ♦	
X1 20i	2.0L L4 F/I	33-2963	
X1 23d	2.0L L4 DSL	33-2942 ♦	
X1 25d	2.0L L4 DSL	33-2942	
X1 28i	2.0L L4 F/I	33-2963	
X1 35i	3.0L L6 F/I	33-2458	
X3 20i	2.0L L4 F/I	33-2465	
X3 35i	3.0L L6 F/I	33-2428	
X5 M	4.4L V8 F/I	33-2449	
X5 xDrive35d	3.0L L6 DSL - US	33-2959	
X6 M	4.4L V8 F/I	33-2449	
Z4 20i	2.0L L4 F/I	33-2963	
Z4 28i	2.0L L4 F/I	33-2963	
2011 BMW			
116i	1.6L L4 F/I - F20	33-2990	
116i	2.0L L4 F/I	RC-9350	
118d	2.0L L4 DSL - F20	33-2990 ♦	
118i	2.0L L4 F/I	E-2021 ♦	
120i	2.0L L4 F/I	E-2021 ♦	
125i	3.0L L6 F/I	E-2022	
316i	1.6L L4 F/I - Exc. N45N Eng	RC-9350	
318i	2.0L L4 F/I	E-2021 ♦	
320D	2.0L L4 DSL	33-2942 ♦	
320i	2.0L L4 F/I	E-2021 ♦	
325d	3.0L L6 DSL	33-2942	
325i	3.0L L6 F/I	33-2332	
330i	3.0L L6 F/I	33-2332	
335d	3.0L L6 DSL	33-2942	
520i	2.0L L4 F/I - China	33-2970	
528i	2.0L L4 F/I	33-2963	
528i xDrive	3.0L L6 F/I - Non-US, F10	33-2970	
530i	3.0L L6 F/I	33-2970	
650i	4.8L V8 F/I - E63/E64	33-2294	
F650GS	652	BM-8006	KN-164
F800GS	798	BM-8006	KN-164
F800R	798	BM-8006	KN-164
F800S	798	BM-8006	
F800ST	798	BM-8006	
G650 Xchallenge	650	BM-6507	KN-151
G650GS	650	BM-6501	KN-151
HP2 Sport	1170	BM-1208	KN-164
K1300GT	1300	BM-1205	KN-160
K1300R	1300	BM-1205	KN-160
K1300S	1300	BM-1205	KN-160
K1600 GT	1600	BM-1611	
K1600 GTL	1600	BM-1611	
M3	4.0L V8 F/I	E-2994	
M6	5.0L V10 F/I - Left Side Air Box	33-2352	

*Indicates 2 filters required ♦ - Intake kit available - see page 80 Applications updated daily at knfilters.com

Partial Listing - Complete List of Vehicles and Applications at knfilters.com

Vehicle	Engine Type	Air Filter	Oil Filter
2011 BMW			
M6	5.0L V10 F/I - Right Side Air Box	33-2350	
R1200GS	1200	BM-1204	KN-164
R1200GS Adventure	1200	BM-1204	KN-164
R1200R	1200	BM-1204	KN-164
R1200RT	1200	BM-1204	KN-164
S1000RR	990	BM-1010	KN-160
S1000RR	990 - Race Specific	BM-1010R	KN-160
X3	3.0L L6 F/I - exc. Turbo	33-2465	
X3	3.0L L6 F/I - US, Turbo, Non-US, F25	33-2428	
X3 20i	2.0L L4 F/I	33-2465	
X3 xDrive28i	3.0L L6 F/I - exc. Turbo	33-2465	
X3 xDrive35i	3.0L L6 F/I - US, Turbo, Non-US, F25	33-2428	
X5 M	4.4L V8 F/I	33-2449	
X5 xDrive35d	3.0L L6 DSL	33-2959	
X6 M	4.4L V8 F/I	33-2449	
2010 BMW			
116i	1.6L L4 F/I	E-2021	
116i	2.0L L4 F/I	RC-9350	
118i	2.0L L4 F/I	E-2021 ♦	
120i	2.0L L4 F/I	E-2021 ♦	
316D	2.0L L4 DSL	33-2942 ♦	
316i	1.6L L4 F/I - Exc. N45N Eng	RC-9350	
316i	1.6L L4 F/I - N45N Eng	E-2021	
318i	2.0L L4 F/I	E-2021 ♦	
320D	2.0L L4 DSL	33-2942 ♦	
320i	2.0L L4 F/I	E-2021 ♦	
325d	3.0L L6 DSL - from 4/10	33-2942	
325i	3.0L L6 F/I - w/Panel Filter	33-2332	
325i	3.0L L6 F/I - w/Round Filter	E-2022	
330D	3.0L L6 DSL	33-2942 ♦	
330i	3.0L L6 F/I - w/Panel Filter	33-2332	
330i	3.0L L6 F/I - w/Round Filter	E-2022	
335d	3.0L L6 DSL	33-2942	
525i	3.0L L6 F/I	33-2292	
530i	3.0L L6 F/I	33-2292	
550i	4.8L V8 F/I	33-2294	
650i	4.8L V8 F/I	33-2294	
730i	3.0L L6 F/I	33-2970	
F650GS	652	BM-8006	KN-164
F800GS	798	BM-8006	KN-164
F800R	798	BM-8006	KN-164
F800S	798	BM-8006	
F800ST	798	BM-8006	
G450X	450		KN-611
G650 Xmoto	650	BM-6507	KN-151
G650GS	650	BM-6501	KN-151
HP2 Sport	1170	BM-1208	KN-164
K1300GT	1300	BM-1205	KN-160
K1300GT SE	1300		KN-160
K1300R	1300	BM-1205	KN-160
K1300S	1300	BM-1205	KN-160
M3	4.0L V8 F/I	E-2994	
M5	5.0L V10 F/I - Left Side Air Box	33-2352	
M5	5.0L V10 F/I - Right Side Air Box	33-2350	
M6	5.0L V10 F/I - Left Side Air Box	33-2352	
M6	5.0L V10 F/I - Right Side Air Box	33-2350	

Vehicle	Engine Type	Air Filter	Oil Filter
2010 BMW			
R1200 HP2 Sport	1200		KN-164
R1200GS	1200	BM-1204	KN-164
R1200GS Adventure	1200	BM-1204	KN-164
R1200R	1200	BM-1204	KN-164
R1200RT	1200	BM-1204	KN-164
R1200S	1200	BM-1204	
S1000RR	990	BM-1010	KN-160
S1000RR	990 - Race Specific	BM-1010R	KN-160
X3 Si	2.5L L6 F/I	33-2372	
X5	4.8L V8 F/I	33-2407	
X5 M	4.4L V8 F/I	33-2449	
X5 xDrive30d	3.0L L6 DSL - to 3/10	E-2657	
X5 xDrive35d	3.0L L6 DSL	33-2959	
X6 M	4.4L V8 F/I	33-2449	
X6 xDrive 30d	3.0L L6 DSL - to 3/10	E-2657	
X6 xDrive 35d	3.0L L6 DSL	33-2959	
Z4	2.5L L6 F/I	33-2963	
2009 BMW			
116D	2.0L L4 DSL	33-2942 ♦	
116i	1.6L L4 F/I	E-2021	
118i	2.0L L4 F/I	E-2021 ♦	
123d	2.0L L4 DSL	33-2942 ♦	
316i	1.6L L4 F/I - Exc. N45N Eng	RC-9350	
318i	2.0L L4 F/I	E-2021 ♦	
320D	2.0L L4 DSL	33-2942 ♦	
320i	2.0L L4 F/I	E-2021 ♦	
325i	3.0L L6 F/I	E-2022	
328xi	3.0L L6 F/I	33-2332	
330D	3.0L L6 DSL	33-2942 ♦	
330i	3.0L L6 F/I	E-2022	
335d	3.0L L6 DSL	33-2942	
520d	2.0L L4 DSL	33-2943	
525i	3.0L L6 F/I	33-2292	
528xi	3.0L L6 F/I	33-2292	
530i	3.0L L6 F/I	33-2292	
535d	3.0L L6 DSL	33-2943	
535i GT	3.0L L6 F/I	33-2428	
540i	4.0L V8 F/I	33-2294	
550i	4.8L V8 F/I	33-2294	
650i	4.8L V8 F/I	33-2294	
F650GS	652	BM-8006	KN-164
F650GS Dakar	652	BM-8006	
F800GS	798	BM-8006	KN-164
F800S	798	BM-8006	KN-164
F800ST	798	BM-8006	KN-164
G450X	450		KN-611
G650 Xcountry	650	BM-6507	KN-151
G650GS	650	BM-6501	KN-151
HP2 Sport	1170	BM-1208	KN-164
K1300GT	1300	BM-1205	KN-160
K1300R	1300	BM-1205	KN-160
K1300S	1300	BM-1205	KN-160
M3	4.0L V8 F/I - Non-US	E-2994	
M3	4.0L V8 F/I - US	E-1994	
M5	5.0L V10 F/I - Left Side Air Box	33-2352	
M5	5.0L V10 F/I - Right Side Air Box	33-2350	
M6	5.0L V10 F/I - Left Side Air Box	33-2352	
M6	5.0L V10 F/I - Right Side Air Box	33-2350	
R1200GS	1170	BM-1204	KN-164
R1200R	1170	BM-1204	KN-164

*Indicates 2 filters required ♦ - Intake kit available - see page 80 Applications updated daily at knfilters.com

AIR & OIL FILTERS

Vehicle	Engine Type	Air Filter	Oil Filter
2009 BMW			
R1200RT	1170	BM-1204	KN-164
S1000RR	990	BM-1010	KN-164
S1000RR	990 - Race Specific	BM-1010R	KN-164
X3	3.0L L6 DSL	33-2946	
X5	4.8L V8 F/I	33-2407	
X5 M	4.4L V8 F/I	33-2449	
X5 xDrive30d	3.0L L6 DSL	E-2657	
X5 xDrive35d	3.0L L6 DSL	33-2959	
X6 M	4.4L V8 F/I	33-2449	
X6 xDrive 30d	3.0L L6 DSL	E-2657	
X6 xDrive 35d	3.0L L6 DSL	33-2959	
Z4	2.5L L6 F/I	33-2963	
Z4	3.2L L6 F/I	33-2292	
2008 BMW			
116i	1.6L L4 F/I	E-2021	
118i	2.0L L4 F/I	E-2021 ♦	
120d	2.0L L4 DSL	33-2942 ♦	
120i	2.0L L4 F/I	E-2021 ♦	
123d	2.0L L4 DSL	33-2942 ♦	
125i	3.0L L6 F/I	E-2022	
130i	3.0L L6 F/I	E-2022	
316i	1.6L L4 F/I - Exc. N45N Eng	RC-9350	
318i	2.0L L4 F/I	E-2021 ♦	
323i	2.5L L6 F/I - Non-US	E-2022	
335d	3.0L L6 DSL	33-2942	
520d	2.0L L4 DSL	33-2943	
520i	2.2L L6 F/I	33-2294	
525d	2.5L L6 DSL	E-2657	
525i	3.0L L6 F/I	33-2292	
530i	3.0L L6 F/I	33-2292	
530xi	3.0L L6 F/I	33-2292	
535d	3.0L L6 DSL	33-2943	
540i	4.0L V8 F/I	33-2294	
550i	4.8L V8 F/I	33-2294	
630i	3.0L L6 F/I	33-2292	
635d	3.0L L6 DSL	33-2943	
650i	4.8L V8 F/I	33-2294	
740i	4.0L V8 F/I	33-2254*	
740iL	4.0L V8 F/I	33-2254*	
745d	4.4L V8 DSL	33-2254*	
750i	4.8L V8 F/I - Non-US	33-2254*	
750i	4.8L V8 F/I - US	33-2410	
750iL	4.8L V8 F/I - Non-US	33-2254*	
750Li	4.8L V8 F/I - US	33-2410	
760Li	6.0L V12 F/I - Non-US	33-2254*	
760Li	6.0L V12 F/I - US	33-2410	
F650GS	652	BM-8006	KN-164
F800GS	798	BM-8006	KN-164
F800S	798	BM-8006	KN-164
F800ST	798	BM-8006	KN-164
G650 Xmoto	650	BM-6507	KN-151
K1200GT	1157	BM-1205	KN-160
K1200LT	1170	BM-1299	KN-163
K1200R	1200		KN-160
K1200S	1157	BM-1205*	KN-160
M3	4.0L V8 F/I - Non-US	E-2994	
M3	4.0L V8 F/I - US	E-1994	
M5	5.0L V10 F/I - Left Side Air Box	33-2352 ♦	
M5	5.0L V10 F/I - Right Side Air Box	33-2350 ♦	
M6	5.0L V10 F/I - Left Side Air Box	33-2352 ♦	

Vehicle	Engine Type	Air Filter	Oil Filter
2008 BMW			
M6	5.0L V10 F/I - Right Side Air Box	33-2350 ♦	
R1200GS	1170	BM-1204	KN-164
R1200GS Adventure	1170	BM-1204	KN-164
R1200GS HP2	1170		KN-164
R1200R	1170	BM-1204	KN-164
R1200RT	1170	BM-1204	KN-164
X3	3.0L L6 DSL - exc. SD	E-2657	
X3	3.0L L6 DSL - SD	33-2946	
X5	4.8L V8 F/I	33-2407	
X5 xDrive30d	3.0L L6 DSL	E-2657	
X5 xDrive35d	3.0L L6 DSL	33-2959	
X6 xDrive 30d	3.0L L6 DSL	E-2657	
X6 xDrive 35d	3.0L L6 DSL	33-2959	
Z4	2.5L L6 F/I	33-2372	
Z4	3.2L L6 F/I	33-2292	
2007 BMW			
116i	1.6L L4 F/I	E-2021 ♦	
118i	2.0L L4 F/I	E-2021 ♦	
120d	2.0L L4 DSL - 143BHP, from 3/07	33-2942 ♦	
120d	2.0L L4 DSL - to 2/07	E-2653 ♦	
120i	2.0L L4 F/I	E-2021 ♦	
135i	3.0L L6 F/I	33-2367	
316i	1.6L L4 F/I	RC-9350	
318D	2.0L L4 DSL - 122BHP, to 8/07	E-2653 ♦	
318D	2.0L L4 DSL - 143BHP, from 9/07	33-2942 ♦	
318i	2.0L L4 F/I	E-2021 ♦	
320D	2.0L L4 DSL - 163BHP, to 8/07	E-2653 ♦	
320D	2.0L L4 DSL - 177BHP, from 3/07	33-2942 ♦	
323i	2.5L L6 F/I - Non-US	E-2022	
330D	3.0L L6 DSL	E-2657 ♦	
335d	3.0L L6 DSL	33-2942	
335xi	3.0L L6 F/I	33-2367	
540i	4.0L V8 F/I	33-2294	
550i	4.8L V8 F/I	33-2294	
650i	4.8L V8 F/I	33-2294	
740iL	4.0L V8 F/I	33-2254*	
745d	4.4L V8 DSL	33-2254*	
750i	4.8L V8 F/I - Non-US	33-2254*	
750i	4.8L V8 F/I - US	33-2410	
750iL	4.8L V8 F/I - Non-US	33-2254*	
750Li	4.8L V8 F/I - US	33-2410	
760Li	6.0L V12 F/I - Non-US	33-2254*	
760Li	6.0L V12 F/I - US	33-2410	
F650GS	652	BM-6501	KN-151
F650GS Dakar	652	BM-6501	KN-151
F800GS	798	BM-8006	KN-164
F800S	798	BM-8006	KN-164
F800ST	798	BM-8006	KN-164
G650 Xchallenge	650	BM-6507	KN-151
G650 Xcountry	650	BM-6507	KN-151
G650 Xmoto	650	BM-6507	KN-151
K1200GT	1157	BM-1205	KN-160
K1200LT	1170	BM-1299	KN-163
K1200R	1200	BM-1205	KN-160
K1200R Sport	1157	BM-1205	KN-164
K1200S	1157	BM-1205*	KN-160
M3	3.2L L6 F/I	33-2231	
M5	5.0L V10 F/I - Left Side Air Box	33-2352 ♦	
M5	5.0L V10 F/I - Right Side Air Box	33-2350 ♦	

*Indicates 2 filters required ♦ - Intake kit available - see page 80 Applications updated daily at knfilters.com

Partial Listing - Complete List of Vehicles and Applications at knfilters.com

Vehicle	Engine Type	Air Filter	Oil Filter
2007 BMW			
M6	5.0L V10 F/I - Left Side Air Box	33-2352 ♦	
M6	5.0L V10 F/I - Right Side Air Box	33-2350 ♦	
R1200GS	1170	BM-1204	KN-164
R1200GS Adventure	1170	BM-1204	KN-164
R1200GS HP2	1170		KN-164
R1200R	1170	BM-1204	KN-164
R1200RT	1170	BM-1204	KN-164
R1200S	1170	BM-1204	KN-164
R1200ST	1170	BM-1204	KN-164
X3	2.0L L4 DSL - to 8/07	E-2653	
X3	3.0L L6 DSL - exc. SD	E-2657	
X3	3.0L L6 DSL - SD	33-2946	
X5	3.0L L6 DSL	E-2657	
X5	4.4L V8 F/I	33-2149	
X5	4.8L V8 F/I	33-2407	
X5 xDrive35d	3.0L L6 DSL	33-2959	
Z4	2.5L L6 F/I	33-2372	
Z4	3.2L L6 F/I	33-2292	
2006 BMW			
116i	1.6L L4 F/I	E-2021 ♦	
118i	2.0L L4 F/I	E-2021 ♦	
120i	2.0L L4 F/I	E-2021 ♦	
316i	1.6L L4 F/I	RC-9350	
318D	2.0L L4 DSL	E-2653 ♦	
318i	2.0L L4 F/I	E-2021 ♦	
320D	2.0L L4 DSL - 163BHP	E-2653 ♦	
323i	2.5L L6 F/I - Non-US	E-2022	
330D	3.0L L6 DSL	E-2657 ♦	
335i	3.0L L6 F/I	33-2367	
520d	2.0L L4 DSL	E-2653	
535d	3.0L L6 DSL	33-2943	
540i	4.0L V8 F/I	33-2294	
550i	4.8L V8 F/I	33-2294	
630i	3.0L L6 F/I	33-2292	
650i	4.8L V8 F/I	33-2294	
740iL	4.0L V8 F/I	33-2254*	
750i	4.8L V8 F/I	33-2254*	
750iL	4.8L V8 F/I	33-2254*	
750Li	4.8L V8 F/I	33-2254*	
760i	6.0L V12 F/I	33-2254*	
760Li	6.0L V12 F/I	33-2254*	
F650GS	652	BM-6501	KN-151
F650GS Dakar	652	BM-6501	KN-151
F800S	798	BM-8006	KN-164
F800ST	798	BM-8006	KN-164
HP2 Enduro	1170	BM-1204	KN-164
K1200GT	1157	BM-1205	KN-160
K1200LT	1170	BM-1299	KN-163
K1200R	1200	BM-1205	KN-160
K1200S	1157	BM-1205*	KN-160
M3	3.2L L6 F/I	33-2231	
M5	5.0L V10 F/I - Left Side Air Box	33-2352 ♦	
M5	5.0L V10 F/I - Right Side Air Box	33-2350 ♦	
M6	5.0L V10 F/I - Left Side Air Box	33-2352 ♦	
M6	5.0L V10 F/I - Right Side Air Box	33-2350 ♦	
R1150R	1150	BM-0400	KN-163
R1150R Rockster	1150	BM-0400	KN-163
R1200GS	1170	BM-1204	KN-164
R1200GS Adventure	1170	BM-1204	KN-164
R1200GS HP2	1170		KN-164

Vehicle	Engine Type	Air Filter	Oil Filter
2006 BMW			
R1200RT	1170	BM-1204	KN-164
R1200S	1170	BM-1204	KN-164
R1200ST	1170	BM-1204	KN-164
X3	2.0L L4 DSL	E-2653	
X3	3.0L L6 DSL - exc. SD	E-2657	
X3	3.0L L6 DSL - SD	33-2946	
X5	3.0L L6 DSL	E-2657	
X5	4.4L V8 F/I	33-2149	HP-7006
X5	4.4L V8 F/I - exc. E53	33-2149	HP-7006
X5	4.8L V8 F/I	33-2149	
Z4	3.2L L6 F/I - Non-US	33-2292	
2005 BMW			
116i	1.6L L4 F/I	E-2021 ♦	
118i	2.0L L4 F/I	E-2021 ♦	
120i	2.0L L4 F/I	E-2021 ♦	
316Ci	1.6L L4 F/I - 115BHP	E-2232 ♦	
316i	1.6L L4 F/I - 115BHP	E-2232 ♦	
316i	1.8L L4 F/I	E-2232 ♦	
318i	2.0L L4 F/I - 129BHP	E-2021 ♦	
318i	2.0L L4 F/I - 143BHP	E-2232 ♦	
318ti	2.0L L4 F/I	E-2232	
335d	3.0L L6 DSL	33-2942	
525d	2.5L L6 DSL	E-2657	
530xi	3.0L L6 F/I	33-2292	
540i	4.0L V8 F/I	33-2294	
545i	4.4L V8 F/I	33-2294	
550i	4.8L V8 F/I	33-2294	
645Ci	4.4L V8 F/I	33-2294	
650i	4.8L V8 F/I	33-2294	
740iL	4.0L V8 F/I	33-2254*	
745i	4.4L V8 F/I	33-2254	
745Li	4.4L V8 F/I	33-2254	
760Li	6.0L V12 F/I	33-2254*	
F650CS	652	BM-6507	KN-151
F650GS	652	BM-6501	KN-151
F650GS Dakar	652	BM-6501	KN-151
K1200GT	1157	BM-1299	KN-160
K1200LT	1170	BM-1299	KN-163
K1200LT SE	1200		KN-164
K1200R	1200	BM-1205	KN-160
K1200RS	1200	BM-1299	KN-160
K1200RS SE	1200		KN-160
K1200S	1157	BM-1205*	KN-160
M3	3.2L L6 F/I	33-2231 ♦	
M5	5.0L V10 F/I - Left Side Air Box	33-2352 ♦	
M5	5.0L V10 F/I - Right Side Air Box	33-2350 ♦	
M6	5.0L V10 F/I - Left Side Air Box	33-2352 ♦	
M6	5.0L V10 F/I - Right Side Air Box	33-2350 ♦	
R1100S	1100	BM-1199	KN-163
R1100S Replika	1100	BM-1199	KN-163
R1150GS	1150		KN-163
R1150GS Adventure	1150	BM-0400	KN-163
R1150R	1150	BM-0400	KN-163
R1150R Rockster	1150	BM-0400	KN-163
R1150RS	1150	BM-0400	KN-163
R1150RT	1150	BM-0400	KN-163
R1200GS	1170	BM-1204	KN-164
R1200GS HP2	1170		KN-164
R1200RT	1170	BM-1204	KN-164
R1200ST	1170	BM-1204	KN-164
X3	3.0L L6 DSL	E-2657	

*Indicates 2 filters required ♦ - Intake kit available - see page 80 Applications updated daily at knfilters.com

AIR & OIL FILTERS

Vehicle	Engine Type	Air Filter	Oil Filter
2005 BMW			
X5	3.0L L6 DSL	E-2657	
X5	4.4L V8 F/I	33-2149	
X5	4.8L V8 F/I	33-2149	
2004 BMW			
118i	2.0L L4 F/I	E-2021 ♦	
120d	2.0L L4 DSL	E-2653	
316Ci	1.6L L4 F/I - 115BHP	E-2232 ♦	
316Ti	1.8L L4 F/I	E-2232 ♦	
318i	2.0L L4 F/I	E-2232	
318ti	2.0L L4 F/I	E-2232	
320D	2.0L L4 DSL	E-2653	
330D	3.0L L6 DSL	E-2657	
520i	2.2L L6 F/I - E60, E61	33-2292	
535d	3.0L L6 DSL	33-2943	
540i	4.4L V8 F/I	33-2142	HP-7006
545i	4.4L V8 F/I	33-2294	
630i	3.0L L6 F/I	33-2292	
645Ci	4.4L V8 F/I	33-2294	
745i	4.4L V8 F/I	33-2254	
745Li	4.4L V8 F/I	33-2254	
760Li	6.0L V12 F/I	33-2254*	
F650CS	652	BM-6507	KN-151
F650GS	652	BM-6501	KN-151
F650GS Dakar	652	BM-6501	KN-151
K1200GT	1157	BM-1299	
K1200LT	1170	BM-1299	KN-163
K1200RS	1200	BM-1299	KN-163
K1200RS SE	1200		KN-163
M3	3.2L L6 F/I	33-2231 ♦	
M5	5.0L V8 F/I	33-2142*	HP-7006
R1100S	1100	BM-1199	KN-163
R1100S Prep	1100		KN-163
R1100S Replika	1100	BM-1199	KN-163
R1150GS	1150		KN-163
R1150GS Adventure	1150	BM-0400	KN-163
R1150R	1150	BM-0400	KN-163
R1150R Rockster	1150	BM-0400	KN-163
R1150R Rockster Edition 80	1150		KN-163
R1150RS	1150	BM-0400	KN-163
R1150RT	1150	BM-0400	KN-163
R1200C	1200	BM-1298	KN-163
R1200C Classic	1200		KN-163
R1200C Independent	1200		KN-163
R1200C Montauk	1200	BM-1298	KN-163
R1200C Phoenix	1200		KN-163
R1200CL	1200	BM-1298	KN-163
R1200GS	1170	BM-1204	KN-164
X3	2.0L L4 DSL	E-2653	
X3	3.0L L6 DSL	E-2657	
X5	3.0L L6 DSL	E-2657	
X5	4.4L V8 F/I	33-2149	
X5	4.6L V8 F/I		HP-7006
X5	4.8L V8 F/I	33-2149	
2003 BMW			
316Ci	1.6L L4 F/I - 115BHP	E-2232 ♦	
316i	1.6L L4 F/I - 115BHP	E-2232 ♦	
316i	1.8L L4 F/I	E-2232 ♦	
316Ti	1.8L L4 F/I	E-2232 ♦	
318i	2.0L L4 F/I	E-2232	
318ti	2.0L L4 F/I	E-2232	
320D	2.0L L4 DSL	E-2653	
535i	3.5L L6 F/I	33-2142	HP-7006

Vehicle	Engine Type	Air Filter	Oil Filter
2003 BMW			
540i	4.4L V8 F/I	33-2142	HP-7006
745i	4.4L V8 F/I	33-2254	
745Li	4.4L V8 F/I	33-2254	
760Li	6.0L V12 F/I	33-2254*	
F650CS	652	BM-6507	KN-151
F650GS	650	BM-6501	KN-151
F650GS Dakar	650	BM-6501	KN-151
K1200GT	1157	BM-1299	
K1200LT	1200	BM-1299	KN-163
K1200RS	1200	BM-1299	KN-163
K1200RS SE	1200		KN-163
M3	3.2L L6 F/I	33-2231 ♦	
M5	4.9L V8 F/I		HP-7006
M5	5.0L V8 F/I	33-2142*	HP-7006
R1100S	1100	BM-1199	KN-163
R1100S Replika	1100		KN-163
R1150GS	1150	BM-0400	KN-163
R1150GS Adventure	1150	BM-0400	KN-163
R1150R	1150	BM-0400	KN-163
R1150RS	1150	BM-0400	KN-163
R1150RT	1150	BM-0400	KN-163
R1200CL	1200	BM-1298	KN-163
X5	3.0L L6 DSL	E-2657	
X5	4.4L V8 F/I	33-2149	HP-7006
X5	4.6L V8 F/I	33-2149	HP-7006
X5	4.8L V8 F/I	33-2149	
Z8	4.8L V8 F/I	33-2204	HP-7006
2002 BMW			
318i	2.0L L4 F/I	E-2232	
318ti	2.0L L4 F/I	E-2232	
530d	3.0L L6 DSL	E-2657	
535i	3.5L L6 F/I	33-2142	HP-7006
540i	4.4L V8 F/I	33-2142	HP-7006
745i	4.4L V8 F/I	33-2254	
745Li	4.4L V8 F/I	33-2254	
F650CS	652	BM-6507	KN-151
F650GS	650	BM-6501	KN-151
F650GS Dakar	650	BM-6501	KN-151
K1200LT	1200	BM-1299	KN-163
K1200LT ABS	1200	BM-1299	KN-163
K1200LT Lux	1200		KN-163
K1200LT SE	1200	BM-1299	KN-163
K1200RS	1200	BM-1299	KN-163
K1200RS SE	1200		KN-163
M3	3.2L L6 F/I	33-2231 ♦	
M5	4.9L V8 F/I		HP-7006
M5	5.0L V8 F/I	33-2142*	HP-7006
R1100S	1100	BM-1199	KN-163
R1100S Sport	1100		KN-163
R1150GS	1150	BM-0400	KN-163
R1150GS Adventure	1150	BM-0400	KN-163
R1150R	1150	BM-0400	KN-163
R1150RS	1150	BM-0400	KN-163
R1150RS SE	1150		KN-163
R1150RT	1150	BM-0400	KN-163
R1200C Avantgarde	1200	BM-1298	KN-163
R1200C Classic	1200	BM-1298	KN-163
R1200C Independent	1200	BM-1298	KN-163
X5	3.0L L6 DSL	E-2657	
X5	4.4L V8 F/I	33-2149	HP-7006
X5	4.6L V8 F/I	33-2149	HP-7006
Z3	3.2L L6 F/I	33-2070	

*Indicates 2 filters required ♦ - Intake kit available - see page 80 Applications updated daily at knfilters.com

Partial Listing - Complete List of Vehicles and Applications at knfilters.com

Vehicle	Engine Type	Air Filter	Oil Filter
2001 BMW			
318i	2.0L L4 F/I	E-2232	
318ti	2.0L L4 F/I	E-2232	
320D	2.0L L4 DSL	E-2653	
530d	3.0L L6 DSL	E-2657	
535i	3.5L L6 F/I	33-2142	HP-7006
540i	4.4L V8 F/I	33-2142	HP-7006
740i	4.0L V8 F/I		HP-7006
740i	4.0L V8 F/I - Non-US	33-2675	HP-7006
740i	4.4L V8 F/I		HP-7006
740i	4.4L V8 F/I - Non-US	33-2675	HP-7006
740i	4.4L V8 F/I - US	33-2142	HP-7006
740iL	4.0L V8 F/I		HP-7006
740iL	4.0L V8 F/I - Non-US	33-2675	HP-7006
740iL	4.4L V8 F/I		HP-7006
740iL	4.4L V8 F/I - Non-US	33-2675	HP-7006
740iL	4.4L V8 F/I - US	33-2142	HP-7006
750iL	5.4L V12 F/I	33-2752*	HP-7006
F650CS	652	BM-6507	
F650GS	650	BM-6501	KN-151
F650GS Dakar	650	BM-6501	KN-151
K1200LT ABS	1200	BM-1299	KN-163
K1200RS	1200	BM-1299	KN-163
M3	3.2L L6 F/I	33-2231 ♦	
M5	4.9L V8 F/I		HP-7006
M5	5.0L V8 F/I	33-2142*	HP-7006
R1100R	1100	BM-0400	KN-163
R1100RS ABS	1100	BM-0400	KN-163
R1100RT ABS	1100	BM-0400	KN-163
R1100S	1100	BM-1199	KN-163
R1150GS	1150	BM-0400	KN-163
R1150RT	1150	BM-0400	KN-163
R1200C	1170	BM-1298	KN-163
R1200C Avantgarde	1200	BM-1298	KN-163
R1200C Classic	1200	BM-1298	KN-163
R1200C Cruser	1170	BM-1298	KN-163
R1200C Independent	1200	BM-1298	KN-163
R1200C Phoenix	1200	BM-1298	KN-163
X5	3.0L L6 DSL	E-2657	
X5	4.4L V8 F/I	33-2149	HP-7006
X5	4.6L V8 F/I	33-2149	HP-7006
Z3	3.2L L6 F/I	33-2070 ♦	
2000 BMW			
316Ci	1.6L L4 F/I	33-2231 ♦	
316i	1.6L L4 F/I - E46	33-2231 ♦	
318i	1.9L L4 F/I	33-2231 ♦	
540i	4.4L V8 F/I	33-2142	HP-7006
740i	4.0L V8 F/I		HP-7006
740i	4.0L V8 F/I - Non-US	33-2675	HP-7006
740i	4.4L V8 F/I		HP-7006
740i	4.4L V8 F/I - Non-US	33-2675	HP-7006
740i	4.4L V8 F/I - US	33-2142	HP-7006
740iL	4.0L V8 F/I		HP-7006
740iL	4.0L V8 F/I - Non-US	33-2675	HP-7006
740iL	4.4L V8 F/I		HP-7006
740iL	4.4L V8 F/I - Non-US	33-2675	HP-7006
740iL	4.4L V8 F/I - US	33-2142	HP-7006
750iL	5.4L V12 F/I	33-2752*	HP-7006
F650 Funduro	650		KN-151
F650GS	650	BM-6501	KN-151
F650ST Strada	650		KN-151
K1200LT ABS	1200	BM-1299	KN-163
K1200RS	1200	BM-1299	KN-163
M3	3.0L L6 F/I	33-2070 ♦	

Vehicle	Engine Type	Air Filter	Oil Filter
2000 BMW			
M3	3.2L L6 F/I	33-2231	
M5	4.9L V8 F/I		HP-7006
M5	5.0L V8 F/I	33-2142*	HP-7006
R1100R	1100	BM-0400	KN-163
R1100R ABS	1100	BM-0400	KN-163
R1100RS ABS	1100	BM-0400	KN-163
R1100RS Special Edition	1100		KN-163
R1100RT ABS	1100	BM-0400	KN-163
R1100S	1100	BM-1199	KN-163
R1100S Sport	1100		KN-163
R1150GS	1150	BM-0400	KN-163
R1200C	1170	BM-1298	KN-163
R1200C Avantgarde	1200		KN-163
R1200C Cruser	1170	BM-1298	KN-163
X5	3.0L L6 DSL	E-2657	
X5	4.4L V8 F/I	33-2149	HP-7006
Z3	1.9L L4 F/I	33-2733 ♦	
Z3	2.0L L6 F/I	33-2070 ♦	
Z3	3.2L L6 F/I	33-2070 ♦	
Z8	4.9L V8 F/I	33-2204*	HP-7006
1999 BMW			
318i	1.9L L4 F/I	33-2231 ♦	
318iS	1.9L L4 F/I	33-2733 ♦	
318ti	1.9L L4 F/I - Non-US	33-2733 ♦	
318ti	1.9L L4 F/I - US	33-2231 ♦	
325i	2.5L L6 F/I	33-2070 ♦	
535i	3.5L L6 F/I	33-2142	HP-7006
540i	4.4L V8 F/I	33-2142	HP-7006
740i	4.0L V8 F/I		HP-7006
740i	4.0L V8 F/I - Non-US	33-2675	HP-7006
740i	4.4L V8 F/I		HP-7006
740i	4.4L V8 F/I - Non-US	33-2675	HP-7006
740i	4.4L V8 F/I - US	33-2142	HP-7006
740iL	4.0L V8 F/I		HP-7006
740iL	4.0L V8 F/I - Non-US	33-2675	HP-7006
740iL	4.4L V8 F/I		HP-7006
740iL	4.4L V8 F/I - Non-US	33-2675	HP-7006
740iL	4.4L V8 F/I - US	33-2142	HP-7006
750iL	5.4L V12 F/I	33-2752*	HP-7006
F650 Funduro	650		KN-151
K1200C	1200		KN-163
K1200LT ABS	1200	BM-1299	KN-163
K1200RS	1200	BM-1299	KN-163
M Coupe	3.2L L6 F/I	33-2070	
M3	3.0L L6 F/I	33-2070 ♦	
M3	3.2L L6 F/I	33-2070 ♦	
R1100GS ABS	1100	BM-0400	KN-163
R1100R	1100	BM-0400	KN-163
R1100R ABS	1100	BM-0400	KN-163
R1100RS ABS	1100	BM-0400	KN-163
R1100RT ABS	1100	BM-0400	KN-163
R1100S	1100	BM-1199	KN-163
R1200C	1170	BM-1298	KN-163
R1200C Cruser	1170	BM-1298	KN-163
Z3	3.2L L6 F/I	33-2070 ♦	
1998 BMW			
318i	1.8L L4 F/I	33-2733 ♦	
318i	1.9L L4 F/I - Non-US	33-2231 ♦	
318i	1.9L L4 F/I - US	33-2733 ♦	
318iS	1.9L L4 F/I	33-2733 ♦	
318ti	1.9L L4 F/I	33-2733 ♦	
325i	2.5L L6 F/I	33-2070 ♦	

*Indicates 2 filters required ♦ - Intake kit available - see page 80 Applications updated daily at knfilters.com

AIR & OIL FILTERS

Vehicle	Engine Type	Air Filter	Oil Filter
1998 BMW			
525tds	2.5L L6 DSL	33-2706	
540i	4.4L V8 F/I	33-2142	HP-7006
740i	4.0L V8 F/I	33-2675	HP-7006
740i	4.4L V8 F/I	33-2675	HP-7006
740iL	4.0L V8 F/I	33-2675	HP-7006
740iL	4.4L V8 F/I	33-2675	HP-7006
750iL	5.4L V12 F/I	33-2752*	HP-7006
F650 Funduro	650		KN-151
F650ST Strada	650		KN-151
K1200RS	1200	BM-1299	KN-163
M Coupe	3.2L L6 F/I	33-2070	
M3	3.0L L6 F/I	33-2070 ♦	
M3	3.2L L6 F/I	33-2070 ♦	
M5	5.0L V8 F/I	33-2142*	HP-7006
R1100GS ABS	1100	BM-0400	KN-163
R1100GS PD	1100		KN-163
R1100R	1100	BM-0400	KN-163
R1100R ABS	1100	BM-0400	KN-163
R1100RS ABS	1100	BM-0400	KN-163
R1100RT ABS	1100	BM-0400	
R1200C	1170	BM-1298	KN-163
R1200C Cruser	1170	BM-1298	
Z3	1.8L L4 F/I	33-2733	
Z3	1.9L L4 F/I	33-2733 ♦	
Z3	3.2L L6 F/I	33-2070 ♦	
1997 BMW			
316i	1.6L L4 F/I	33-2733 ♦	
318i	1.8L L4 F/I	33-2733 ♦	
318i	1.9L L4 F/I - Non-US	33-2231	
318i	1.9L L4 F/I - US	33-2733	
318iC	1.9L L4 F/I - US	33-2733	
318iS	1.8L L4 F/I	33-2733	
318iS	1.9L L4 F/I	33-2733 ♦	
318ti	1.9L L4 F/I	33-2733 ♦	
320i	2.0L L6 F/I	33-2070 ♦	
325i	2.5L L6 F/I	33-2070 ♦	
328Ci	2.8L L6 F/I	33-2070 ♦	
525tds	2.5L L6 DSL	33-2706	
540i	4.4L V8 F/I	33-2142	HP-7006
740i	4.0L V8 F/I	33-2675	HP-7006
740i	4.4L V8 F/I	33-2675	HP-7006
740iL	4.0L V8 F/I	33-2675	HP-7006
740iL	4.4L V8 F/I	33-2675	HP-7006
750iL	5.4L V12 F/I	33-2752*	HP-7006
840Ci	4.4L V8 F/I	33-2675	HP-7006
850Ci	5.4L V12 F/I	33-2059*	HP-7006
F650 Funduro	650		KN-151
F650ST Strada	650		KN-151
M3	3.0L L6 F/I	33-2070 ♦	
M3	3.2L L6 F/I	33-2070 ♦	
R850R	832	BM-0400	KN-163
R1100GS ABS	1100	BM-0400	KN-163
R1100RS ABS	1100	BM-0400	KN-163
R1100RT ABS	1100	BM-0400	
Z3	1.8L L4 F/I	33-2733	
Z3	1.9L L4 F/I	33-2733 ♦	
1996 BMW			
318i	1.8L L4 F/I	33-2733 ♦	
318i	1.9L L4 F/I - Non-US	33-2231	
318i	1.9L L4 F/I - US	33-2733	
318iC	1.9L L4 F/I - US	33-2733	
318iS	1.8L L4 F/I	33-2733	
318iS	1.9L L4 F/I	33-2733 ♦	

Vehicle	Engine Type	Air Filter	Oil Filter
1996 BMW			
318tds	1.8L L4 DSL	33-2745	
318ti	1.9L L4 F/I	33-2733 ♦	
320i	2.0L L6 F/I	33-2070 ♦	
325i	2.5L L6 F/I	33-2070 ♦	
740iL	4.4L V8 F/I	33-2675	HP-7006
750iL	5.4L V12 F/I	33-2752*	HP-7006
K1100LT ABS	1100	BM-2605	KN-163
K1100RS	1100	BM-2605	
M3	3.0L L6 F/I	33-2070 ♦	
M3	3.2L L6 F/I	33-2070 ♦	
R100RT	1000 - w/o oil cooler		KN-161
R850R	832	BM-0400	KN-163
R1100GS ABS	1100	BM-0400	KN-163
R1100R	1100	BM-0400	KN-163
R1100R ABS	1100	BM-0400	KN-163
R1100RS ABS	1100	BM-0400	KN-163
R1100RSL ABS	1100	BM-0400	
R1100RT ABS	1100	BM-0400	
Z3	1.8L L4 F/I	33-2733	
Z3	1.9L L4 F/I	33-2733 ♦	
1995 BMW			
318i	1.8L L4 F/I - Non-US, from 9/95	33-2733 ♦	
318i	1.8L L4 F/I - Non-US, to 8/95	33-2059 ♦	
318i	1.8L L4 F/I - US	33-2733	
318iC	1.8L L4 F/I	33-2733	
318iS	1.8L L4 F/I	33-2733 ♦	
318iS	1.9L L4 F/I	33-2733	
318ti	1.8L L4 F/I	33-2733 ♦	
318ti	1.9L L4 F/I	33-2733 ♦	
320i	2.0L L6 F/I	33-2070 ♦	
325Ci	2.5L L6 F/I	33-2070 ♦	
325i	2.5L L6 F/I	33-2070 ♦	
325iS	2.5L L6 F/I	33-2070 ♦	
525i	2.5L L6 F/I	33-2078 ♦	
525iT	2.5L L6 F/I	33-2078	
525iX	2.5L L6 F/I	33-2078	
530i	3.0L V8 F/I	33-2675	
530i	3.0L V8 F/I - w/ Plastic Center Tube	33-2675	HP-7006
530iT	3.0L V8 F/I	33-2675	HP-7006
540i	4.0L V8 F/I	33-2675	
540i	4.0L V8 F/I - w/ Plastic Center Tube	33-2675	HP-7006
740i	4.0L V8 F/I	33-2675	
740i	4.0L V8 F/I - w/ Plastic Center Tube	33-2675	HP-7006
740iL	4.0L V8 F/I	33-2675	
740iL	4.0L V8 F/I - w/ Plastic Center Tube	33-2675	HP-7006
750i	5.4L V12 F/I	33-2752*	HP-7006
750iL	5.4L V12 F/I	33-2752*	
750iL	5.4L V12 F/I - w/ Plastic Center Tube	33-2752*	HP-7006
840Ci	4.0L V8 F/I	33-2675	
840Ci	4.0L V8 F/I - w/ Plastic Center Tube	33-2675	HP-7006
K75/3	750	BM-2605	KN-163
K75/3 ABS	750	BM-2605	KN-163
K75RT	750	BM-2605	KN-163
K75RT ABS	750	BM-2605	KN-163
K75S	750	BM-2605	KN-163
K75S ABS	750	BM-2605	KN-163
K1100LT ABS	1100	BM-2605	KN-163
K1100RS	1100	BM-2605	KN-163
M3	3.0L L6 F/I	33-2070 ♦	

*Indicates 2 filters required ♦ - Intake kit available - see page 80 Applications updated daily at knfilters.com

Partial Listing - Complete List of Vehicles and Applications at knfilters.com

Vehicle	Engine Type	Air Filter	Oil Filter
1995 BMW			
M3	3.2L L6 F/I	33-2070 ♦	
M5	3.8L L6 F/I	33-2078 ♦	
R100GS	1000	BM-0300	
R100RS	1000	BM-0300	
R100RT	1000	BM-0300	
R100RT	1000 - w/o oil cooler	BM-0300	KN-161
R1100GS ABS	1100	BM-0400	KN-163
R1100R	1100	BM-0400	KN-163
R1100R ABS	1100	BM-0400	KN-163
R1100RA/S ABS	1100	BM-0400	KN-163
R1100RS ABS	1100	BM-0400	KN-163
R1100RS ABS Special Edition	1100	BM-0400	KN-163
R1100RSL ABS	1100	BM-0400	
R1100RSL ABS Special Edition	1100	BM-0400	
1994 BMW			
318i	1.8L L4 F/I	33-2059 ♦	
318iC	1.8L L4 F/I	33-2059	
318iS	1.8L L4 F/I - Non-US	33-2733 ♦	
318iS	1.8L L4 F/I - US	33-2059	
320i	2.0L L6 F/I	33-2070 ♦	
325Ci	2.5L L6 F/I	33-2070 ♦	
325i	2.5L L6 F/I	33-2070 ♦	
325iS	2.5L L6 F/I	33-2070 ♦	
525i	2.5L L6 F/I	33-2078 ♦	
525iT	2.5L L6 F/I	33-2078	
525iX	2.5L L6 F/I	33-2078	
530i	3.0L V8 F/I	33-2675	
530i	3.0L V8 F/I - w/ Plastic Center Tube	33-2675	HP-7006
530iT	3.0L V8 F/I	33-2675	HP-7006
540i	4.0L V8 F/I	33-2675	
540i	4.0L V8 F/I - w/ Plastic Center Tube	33-2675	HP-7006
740i	4.0L V8 F/I	33-2675	
740i	4.0L V8 F/I - w/ Plastic Center Tube	33-2675	HP-7006
740iL	4.0L V8 F/I	33-2675	
740iL	4.0L V8 F/I - w/ Plastic Center Tube	33-2675	HP-7006
750iL	5.0L V12 F/I	33-2059*	
750iL	5.0L V12 F/I - w/ Plastic Center Tube	33-2059*	HP-7006
750iL	5.4L V12 F/I	33-2752*	HP-7006
K75 ABS	750	BM-2605	KN-163
K75 ABS Special Edition	750	BM-2605	KN-163
K75 Special Edition	750	BM-2605	KN-163
K75RT	750	BM-2605	KN-163
K75RT ABS	750	BM-2605	KN-163
K75S	750	BM-2605	KN-163
K75S ABS	750	BM-2605	KN-163
K75S ABS Special Edition	750	BM-2605	KN-163
K1100RS	1100	BM-2605	KN-163
M3	3.0L L6 F/I	33-2070 ♦	
M5	3.8L L6 F/I	33-2078 ♦	
R1100R	1100	BM-0400	KN-163
R1100RS ABS	1100	BM-0400	KN-163
R1100RS ABS Special Edition	1100	BM-0400	KN-163
R1100RSL ABS	1100	BM-0400	
R1100RSL ABS Special Edition	1100	BM-0400	

Vehicle	Engine Type	Air Filter	Oil Filter
1993 BMW			
318i	1.8L L4 F/I - US	33-2059	
318iS	1.8L L4 F/I - Non-US, from 12/93	33-2733 ♦	
318iS	1.8L L4 F/I - Non-US, to 11/93	33-2059 ♦	
318iS	1.8L L4 F/I - US	33-2059	
320i	2.0L L6 F/I - E30	33-2059 ♦	
320i	2.0L L6 F/I - E36	33-2070 ♦	
320i	2.0L L6 F/I - US	33-2070	
325Ci	2.5L L6 F/I - 24v	33-2070 ♦	
325i	2.5L L6 F/I - Non-US, 12v		HP-2005
325i	2.5L L6 F/I - Non-US, E30	33-2059 ♦	
325i	2.5L L6 F/I - Non-US, E36	33-2070 ♦	
325i	2.5L L6 F/I - US	33-2070 ♦	
325i	2.5L L6 F/I - US, SOHC		HP-2005
325iS	2.5L L6 F/I	33-2070 ♦	
325iX	2.5L L6 F/I	33-2059 ♦	
525i	2.5L L6 F/I	33-2078 ♦	
525iT	2.5L L6 F/I	33-2078	
525iX	2.5L L6 F/I	33-2078	
740i	4.0L V8 F/I	33-2675	
740i	4.0L V8 F/I - w/ Plastic Center Tube	33-2675	HP-7006
740iL	4.0L V8 F/I	33-2675	
740iL	4.0L V8 F/I - w/ Plastic Center Tube	33-2675	HP-7006
850Ci	5.0L V12 F/I	33-2059*	HP-7006
K75RT	750	BM-2605	KN-163
K75RT ABS	750	BM-2605	KN-163
K75S ABS	750	BM-2605	KN-163
K1100LT ABS	1100	BM-2605	KN-163
M3	3.0L L6 F/I	33-2070 ♦	
M5	3.8L L6 F/I	33-2078 ♦	
R100GS	1000	BM-0300	
R100GS	1000 - w/o oil cooler	BM-0300	KN-161
R100R	1000	BM-0300	
R100RS	1000	BM-0300	
R100RS	1000 - w/o oil cooler	BM-0300	KN-161
R100RT	1000	BM-0300	
R100RT	1000 - w/o oil cooler	BM-0300	KN-161
1992 BMW			
316i	1.6L L4 F/I	33-2059 ♦	
318i	1.8L L4 F/I	33-2059 ♦	
318iC	1.8L L4 F/I	33-2059	
318iS	1.8L L4 F/I	33-2059	
320i	2.0L L6 F/I	33-2070	
320i	2.0L L6 F/I - E30	33-2059 ♦	
320i	2.0L L6 F/I - E36	33-2070 ♦	
325Ci	2.5L L6 F/I	33-2059 ♦	
325i	2.5L L6 F/I	33-2070 ♦	
325i	2.5L L6 F/I - 12v	33-2070	HP-2005
325i	2.5L L6 F/I - E30	33-2059 ♦	
325i	2.5L L6 F/I - E36	33-2070 ♦	
325i	2.5L L6 F/I - SOHC	33-2070	HP-2005
325iS	2.5L L6 F/I	33-2070 ♦	
325iX	2.5L L6 F/I	33-2059 ♦	
520i	2.0L L6 F/I	33-2078	
525i	2.5L L6 F/I	33-2078 ♦	
525iX	2.5L L6 F/I	33-2078	
535i	3.5L L6 F/I	33-2573 ♦	
735i	3.5L L6 F/I	33-2573	
735iL	3.5L L6 F/I	33-2573	
850i	5.0L V12 F/I	33-2059*	

*Indicates 2 filters required ♦ - Intake kit available - see page 80 Applications updated daily at knfilters.com

AIR & OIL FILTERS

Vehicle	Engine Type	Air Filter	Oil Filter
1992 BMW			
850i	5.0L V12 F/I - w/ Plastic Center Tube	33-2059*	HP-7006
K75RT	750	BM-2605	KN-163
K75RT ABS	750	BM-2605	KN-163
K75S	750	BM-2605	KN-163
K75S ABS	750	BM-2605	KN-163
K100RS	1000	BM-2605	KN-163
R100GS	1000	BM-0300	
R100GS	1000 - w/o oil cooler	BM-0300	KN-161
R100R	1000	BM-0300	
R100RS	1000	BM-0300	
R100RS	1000 - w/o oil cooler	BM-0300	KN-161
R100RT	1000	BM-0300	
R100RT	1000 - w/o oil cooler	BM-0300	KN-161
1991 BMW			
318i	1.8L L4 F/I	33-2059 ♦	
318iC	1.8L L4 F/I	33-2059	
318iS	1.8L L4 F/I	33-2059	
325i	2.5L L6 F/I	33-2059	HP-2005
325i	2.5L L6 F/I - E30	33-2059 ♦	HP-2005
325i	2.5L L6 F/I - E36	33-2070 ♦	HP-2005
325iX	2.5L L6 F/I	33-2059 ♦	
525i	2.5L L6 F/I - 170BHP	33-2078 ♦	
525i	2.5L L6 F/I - 192BHP	33-2059 ♦	
525i	2.5L L6 F/I - US	33-2059	
525i	2.5L L6 F/I - US, M20 Eng.		HP-2005
525i	2.5L L6 F/I - US, M50 Eng.		HP-7006
525iX	2.5L L6 F/I	33-2078	
535i	3.5L L6 F/I	33-2573 ♦	
735i	3.5L L6 F/I	33-2573	
735iL	3.5L L6 F/I	33-2573	
750iL	5.0L V12 F/I	33-2059*	
750iL	5.0L V12 F/I - w/ Plastic Center Tube	33-2059*	HP-7006
850i	5.0L V12 F/I	33-2059*	
850i	5.0L V12 F/I - w/ Plastic Center Tube	33-2059*	HP-7006
K75RT	750	BM-2605	KN-163
K75RT ABS	750	BM-2605	KN-163
K75S	750	BM-2605	KN-163
K75S ABS	750	BM-2605	KN-163
K100RS	1000	BM-2605	KN-163
M5	3.5L L6 F/I	33-2078 ♦	
M5	3.6L L6 F/I	33-2078	
R100RT	1000	BM-0300	
1990 BMW			
318iS	1.8L L4 F/I	33-2059	
325i	2.5L L6 F/I	33-2059 ♦	HP-2005
325iS	2.5L L6 F/I	33-2059	HP-2005
325iX	2.5L L6 F/I	33-2059 ♦	HP-2005
525i	2.5L L6 F/I - 170BHP	33-2059 ♦	
525i	2.5L L6 F/I - 192BHP	33-2078 ♦	
525i	2.5L L6 F/I - US	33-2059	HP-2005
530i	3.0L L6 F/I	33-2573 ♦	
535i	3.5L L6 F/I	33-2573 ♦	
735i	3.5L L6 F/I	33-2573	
735iL	3.5L L6 F/I	33-2573	
K75RT	750	BM-2605	KN-163
K75S	750	BM-2605	KN-163
K100	1000		KN-163
K100LT	1000	BM-2605	KN-163
K100RS	1000	BM-2605	KN-163
K100RT	1000		KN-163
1990 BMW			
M3	2.3L L4 F/I	33-2005	
M3	2.5L L4 F/I	33-2005	
1989 BMW			
318i	1.8L L4 F/I	33-2059 ♦	
318iS	1.8L L4 F/I	33-2059	
325i	2.5L L6 F/I	33-2059 ♦	HP-2005
325iS	2.5L L6 F/I	33-2059	HP-2005
325iX	2.5L L6 F/I	33-2059 ♦	HP-2005
525i	2.5L L6 F/I		HP-2005
525i	2.5L L6 F/I - 170BHP	33-2059 ♦	HP-2005
525i	2.5L L6 F/I - 192BHP	33-2078 ♦	HP-2005
525i	2.5L L6 F/I - US	33-2059	HP-2005
535i	3.5L L6 F/I	33-2573 ♦	
635CSi	3.5L L6 F/I	33-2005	
735i	3.5L L6 F/I	33-2573	
735iL	3.5L L6 F/I	33-2573	
K100RS	1000	BM-2605	KN-163
M3	2.3L L4 F/I	33-2005	
R100RT	1000	BM-0300	
R100RT	1000 - w/o oil cooler	BM-0300	KN-161
1988 BMW			
325	2.7L L6 F/I	33-2059	HP-2005
325e	2.7L L6 F/I	33-2059	HP-2005
325i	2.5L L6 F/I	33-2059 ♦	HP-2005
325iS	2.5L L6 F/I	33-2059	HP-2005
325iX	2.5L L6 F/I	33-2059 ♦	HP-2005
528E	2.7L L6 F/I	33-2059	HP-2005
535i	3.5L L6 F/I	33-2573 ♦	
535iS	3.5L L6 F/I	33-2005	
635CSi	3.5L L6 F/I	33-2005	
735i	3.5L L6 F/I	33-2573	
735iL	3.5L L6 F/I	33-2573	
K75C	750	BM-2605	KN-163
K75S	750	BM-2605	KN-163
K100LT	1000	BM-2605	KN-163
M3	2.3L L4 F/I	33-2005	
M5	3.5L L6 F/I - Non-US	33-2078 ♦	
M5	3.5L L6 F/I - US	33-2559 ♦	
M6	3.5L L6 F/I	33-2559	
M635CSi	3.5L L6 F/I	33-2559	
R100GS	1000	BM-0300	
R100RT	1000	BM-0300	
R100RT	1000 - w/o oil cooler	BM-0300	KN-161
1987 BMW			
325	2.7L L6 F/I		HP-2005
325e	2.7L L6 F/I	33-2059	HP-2005
325i	2.5L L6 F/I	33-2059 ♦	HP-2005
325iS	2.5L L6 F/I	33-2059	HP-2005
325iX	2.5L L6 F/I	33-2059 ♦	
528E	2.7L L6 F/I	33-2059	HP-2005
535i	3.5L L6 F/I	33-2005	
635CSi	3.5L L6 F/I	33-2005	
K75	750	BM-2605	KN-163
K75C	750	BM-2605	KN-163
K75S	750	BM-2605	KN-163
K100RS	1000	BM-2605	KN-163
M3	2.3L L4 F/I	33-2005	
M635CSi	3.5L L6 F/I	33-2559	
1986 BMW			
325e	2.7L L6 F/I	33-2059	HP-2005
325i	2.5L L6 F/I	33-2059 ♦	
325iX	2.5L L6 F/I	33-2059 ♦	

*Indicates 2 filters required ♦ - Intake kit available - see page 80 Applications updated daily at knfilters.com

Partial Listing - Complete List of Vehicles and Applications at knfilters.com

Vehicle	Engine Type	Air Filter	Oil Filter
1986 BMW			
528E	2.7L L6 F/I	33-2059	HP-2005
535i	3.5L L6 F/I	33-2005	
635CSi	3.5L L6 F/I	33-2005	
K75C	750	BM-2605	KN-163
K100RS	1000	BM-2605	KN-163
K100RT	1000	BM-2605	KN-163
M3	2.3L L4 F/I	33-2005	
R80	800	BM-0300	KN-161
R80GS	800	BM-0300	KN-161
R80RT	800	BM-0300	KN-161
R80ST	800	BM-0300	KN-161
1985 BMW			
318i	1.8L L4 F/I	33-2005 ♦	
325e	2.7L L6 F/I	33-2005	HP-2005
524td	2.4L L6 DSL	33-2577	
528E	2.7L L6 F/I	33-2005	HP-2005
535i	3.5L L6 F/I	33-2005	
635CSi	3.5L L6 F/I	33-2005	
735i	3.5L L6 F/I	33-2005	
745i	3.5L L6 F/I	33-2005	
K100	1000	BM-2605	KN-163
K100LT	1000	BM-2605	KN-163
K100RS	1000	BM-2605	KN-163
K100RT	1000	BM-2605	KN-163
M635CSi	3.5L L6 F/I	33-2559	
R80	800	BM-0300	KN-161
R80GS	800	BM-0300	KN-161
R80RT	800	BM-0300	KN-161
R80ST	800	BM-0300	KN-161
1984 BMW			
318i	1.8L L4 F/I	33-2005 ♦	
325e	2.7L L6 F/I	33-2005	HP-2005
528E	2.7L L6 F/I	33-2005	HP-2005
633CSi	3.2L L6 F/I	33-2005	
R80RT	800	BM-0200	KN-161
R100CS	1000	BM-0300	
R100RS	1000	BM-0300	
R100RT	1000	BM-0300	
R100S	1000	BM-0300	
R100S	1000 - w/o oil cooler	BM-0300	KN-161
R100T	1000	BM-0300	
1983 BMW			
320i	1.8L L4 F/I	33-2005	
320i	2.0L L6 F/I	33-2005 ♦	
633CSi	3.2L L6 F/I	33-2005	
R65	650	BM-0300	KN-161
R65LS	650	BM-0300	KN-161
R75	750	BM-0200	KN-161
R80RT	800	BM-0200	
R100	1000	BM-0200	
R100CS	1000	BM-0300	
R100CS	1000 - w/o oil cooler	BM-0300	KN-161
R100RS	1000	BM-0300	
R100RT	1000	BM-0300	
R100S	1000	BM-0300	
R100S	1000 - w/o oil cooler	BM-0300	KN-161
R100T	1000	BM-0300	
1982 BMW			
320i	1.8L L4 F/I	33-2005	
320i	2.0L L6 F/I	33-2005 ♦	
R65LS	650	BM-0300	KN-161
R100CS	1000	BM-0300	
R100RS	1000	BM-0300	
R100RT	1000	BM-0300	
R100T	1000	BM-0300	
R100TR	1000	BM-0300	
1981 BMW			
320i	1.8L L4 F/I	33-2005	
323i	2.3L L6 F/I	33-2530	
R65	650	BM-0300	KN-161
R65LS	650	BM-0300	KN-161
R80GS	800	BM-0300	KN-161
R100	1000	BM-0200	
R100CS	1000	BM-0300	
R100CS	1000 - w/o oil cooler	BM-0300	KN-161
R100RS	1000	BM-0300	
R100RT	1000	BM-0300	
R100S	1000 - w/o oil cooler		KN-161
R100T	1000	BM-0300	
1980 BMW			
320i	1.8L L4 F/I	33-2005	
528i	2.8L L6 F/I	33-2005	
633CSi	3.2L L6 F/I	33-2005	
R100RS	1000	BM-0300	
R100RT	1000	BM-0300	
R100S	1000	BM-0300	
R100T	1000	BM-0300	
R100T Sport	1000	BM-0300	
1979 BMW			
635CSi	3.5L L6 F/I	33-2005	
R65	650	BM-0300	KN-161
R65LS	650	BM-0300	KN-161
R100	1000	BM-0200	
R100CS	1000	BM-0300	
R100RS	1000	BM-0300	
R100RT	1000	BM-0300	
R100S	1000	BM-0300	
R100S	1000 - w/o oil cooler	BM-0300	KN-161
R100T	1000	BM-0200	
1978 BMW			
R80RT	800	BM-0200	
R100	1000	BM-0200	
R100CS	1000	BM-0300	
R100CS	1000 - w/o oil cooler	BM-0300	KN-161
R100RS	1000	BM-0300	
R100RT	1000	BM-0300	
R100S	1000	BM-0300	
R100S	1000 - w/o oil cooler	BM-0300	KN-161
1977 BMW			
R75	750	BM-0200	KN-161
R100	1000	BM-0200	
R100CS	1000	BM-0300	
R100CS	1000 - w/o oil cooler	BM-0300	KN-161
R100RS	1000	BM-0300	
R100RT	1000	BM-0300	
R100S	1000	BM-0300	
R100S	1000 - w/o oil cooler	BM-0300	KN-161
1976 BMW			
2002	121 L4 CARB	E-2850	
2002tii	2.0L L4 F/I	E-2290	
R60	600	BM-0200	KN-161
R75	750	BM-0200	KN-161
R90	900	BM-0200	KN-161

*Indicates 2 filters required ♦ - Intake kit available - see page 80 Applications updated daily at knfilters.com

AIR & OIL FILTERS

Vehicle	Engine Type	Air Filter	Oil Filter
1976 BMW			
R90S	900	BM-0200	KN-161
1975 BMW			
2002	2.0L L4 CARB - Non-US	E-2630	
2002tii	2.0L L4 F/I	E-2290	
R75	750	BM-0200	KN-161
R90	900	BM-0200	KN-161
R90S	900	BM-0200	KN-161
1974 BMW			
2002	121 L4 CARB - w/auto. trans	E-2850	
2002	121 L4 CARB - w/manual trans.	E-2630	
2002	2.0L L4 F/I - w/auto. trans	E-2850	
2002	2.0L L4 F/I - w/manual trans.	E-2630	
2002tii	2.0L L4 F/I	E-2290	
R60	600	BM-0200	KN-161
R90S	900	BM-0200	KN-161
1973 BMW			
3.0CSi	3.0L L6 F/I	E-2630*	
3.0CSi	3.0L L6 F/I - until Vin 3223675	33-2530	
2002	2.0L L4 F/I - w/auto. trans	E-2850	
2002	2.0L L4 F/I - w/manual trans.	E-2630	
2002tii	2.0L L4 F/I	E-2290	
R75	750	BM-0200	KN-161
1972 BMW			
2002	2.0L L4 CARB	E-2630	
2002tii	2.0L L4 F/I	E-2290	
R75	750	BM-0200	KN-161
1971 BMW			
2002tii	2.0L L4 F/I	E-2630	
R75	750	BM-0200	KN-161
1970 BMW			
R60	600	BM-0200	KN-161
R75	750	BM-0200	KN-161
R90S	900	BM-0200	KN-161
1969 BMW			
2002tii	2.5L L6 CARB	E-2630*	
R60	600		KN-161
R75	750	BM-0200	KN-161
R600	600 - w/choke	BM-0100	
1968 BMW			
R600	600 - w/choke	BM-0100	
1967 BMW			
R500	500 - w/choke	BM-0100	
1965 BMW			
R600	600 - w/choke	BM-0100	
2006 BOMBARDIER			
DS650	650		KN-152
DS650X	644	BD-6500	KN-152
Outlander 400 H.O. 4x4	400	BD-3303	KN-152
Outlander 400 H.O. 4x4 XT	400	BD-3303	KN-152
Outlander 650 H.O. EFI	650	BD-6506	KN-152
Outlander 650 H.O. EFI XT	650	BD-6506	KN-152
2006 BOMBARDIER			
Outlander 800 H.O. EFI	800	BD-6506	KN-152
Outlander 800 H.O. EFI XT	800	BD-6506	KN-152
Outlander Max 400 H.O. 4x4	400	BD-3303	KN-152
Outlander Max 400 H.O. 4x4 XT	400	BD-3303	KN-152
Outlander Max 650 H.O. EFI	650	BD-6506	KN-152
Outlander Max 650 H.O. EFI XT	650	BD-6506	KN-152
Outlander Max 800 H.O. EFI	800	BD-6506	KN-152
Outlander Max 800 H.O. EFI XT	800	BD-6506	KN-152
2005 BOMBARDIER			
DS650	650	BD-6500	KN-152
DS650X	644	BD-6500	KN-152
Outlander 330 H.O. 4x4	330	BD-3303	KN-152
Outlander 400 H.O. 4x4	400	BD-3303	KN-152
Outlander 400 H.O. 4x4 XT	400	BD-3303	KN-152
Outlander Max 400 H.O. 4x4 XT	400	BD-3303	KN-152
Traxter 500 5 Speed	500	BD-6502	KN-557
Traxter 500 Auto CVT	498	BD-6502	KN-556
Traxter 500 XL	500	BD-6502	KN-557
Traxter 500 XT	500	BD-6502	KN-557
Traxter 650 Auto CVT	650	BD-6502	KN-556
Traxter 650 Auto CVT XT	650	BD-6502	KN-556
Traxter Max 500 XT	500	BD-6502	KN-557
Traxter Max 650 Auto CVT	650	BD-6502	KN-556
Traxter Max 650 Auto CVT XT	650	BD-6502	KN-556
2004 BOMBARDIER			
DS650	650	BD-6500	KN-152
DS650 Baja	650	BD-6500	KN-152
Outlander 330 H.O. 2x4	330	BD-3303	KN-152
Outlander 330 H.O. 4x4	330	BD-3303	KN-152
Outlander 400 H.O. 4x4	400	BD-3303	KN-152
Outlander 400 H.O. 4x4 XT	400	BD-3303	KN-152
Outlander Max 400 H.O. 4x4 XT	400	BD-3303	KN-152
Quest 500	495	BD-6502	KN-556
Quest 650	644	BD-6502	KN-556
Quest 650 Max	650	BD-6502	KN-556
Traxter 500	500		KN-557
Traxter 500 Auto	498	BD-6502	KN-557
Traxter 500 Auto XT	500	BD-6502	KN-557
Traxter 500 XL	498	BD-6502	KN-557
Traxter 500 XT	500		KN-557
Traxter Max 500 XT	500	BD-6502	KN-557
2003 BOMBARDIER			
DS650	644	BD-6500	KN-152
DS650 Baja	644	BD-6500	KN-152
Outlander 400 H.O. 4x4	400	BD-3303	KN-152

*Indicates 2 filters required ♦ - Intake kit available - see page 80 Applications updated daily at knfilters.com

Partial Listing - Complete List of Vehicles and Applications at knfilters.com

Vehicle	Engine Type	Air Filter	Oil Filter
2003 BOMBARDIER			
Outlander 400 H.O. 4x4 XT	400	BD-3303	KN-152
Quest 500	495		KN-556
Quest 650	644	BD-6502	KN-556
Quest 650 XT	650		KN-556
Traxter 500	500		KN-557
Traxter 500 Autoshift XT	500	BD-6502	KN-557
Traxter 500 XL	498	BD-6502	KN-557
Traxter 500 XT	500		KN-557
Traxter Max 500	498	BD-6502	KN-557
2002 BOMBARDIER			
DS650	644	BD-6500	KN-152
DS650 Baja	644	BD-6500	KN-152
Quest 650	644	BD-6502	KN-556
Quest 650 XT	650		KN-556
Traxter 500	500		KN-557
Traxter 500 Autoshift	498	BD-6502	KN-557
Traxter 500 XL	498		KN-557
Traxter 500 XT	500	BD-6502	KN-557
2001 BOMBARDIER			
DS650	644	BD-6500	KN-152
Traxter 500	498		KN-557
Traxter 500 Autoshift	500	BD-6502	KN-557
Traxter 500 Footshift	500	BD-6502	KN-557
Traxter 500 XL	498		KN-557
Traxter 500 XT	500	BD-6502	KN-557
2000 BOMBARDIER			
DS650	644	BD-6500	KN-151
Traxter 500	498		KN-557
Traxter 500 XL	498		KN-557
Traxter 500 XT	500		KN-557
1999 BOMBARDIER			
Traxter 500	498		KN-557
Traxter 500 XL	500		KN-557
Traxter 500 XT	500		KN-557
2010 BUELL			
1125CR	1125	BU-1108	KN-564
1125R	1125	BU-1108	KN-564
Blast	500	BU-5000	
Firebolt XB12R	1168	BU-9003	KN-177
Lightning CityX XB9SX	900	BU-9003	KN-177
Lightning Long XB12SS	1200	BU-9003	KN-177
Lightning XB12SCG	1200	BU-9003	KN-177
Ulysses XB12X	1200	BU-9003	KN-177
Ulysses XB12XT	1200	BU-9003	KN-177
2009 BUELL			
1125CR	1125	BU-1108	KN-564
1125R	1125	BU-1108	KN-564
Blast	500	BU-5000	KN-177
Firebolt XB12R	1168	BU-9003	KN-177
Lightning CityX XB9SX	900	BU-9003	KN-177
Lightning Long XB12SS	1200	BU-9003	KN-177
Lightning XB12SCG	1200	BU-9003	KN-177
Ulysses Police XB12XP	1200	BU-9003	KN-177
Ulysses XB12X	1168	BU-9003	KN-177
Ulysses XB12XT	1168	BU-9003	KN-177
2008 BUELL			
1125R	1125	BU-1108	
Blast	480	BU-5000	KN-177
Firebolt XB12R	1168	BU-9003	KN-177
Lightning CityX XB9SX	900		KN-177
Lightning Long XB12SS	1200	BU-9003	KN-177
Lightning XB9SX	900	BU-9003	KN-177
Lightning XB12S	1200	BU-9003	KN-177
Lightning XB12SCG	1200	BU-9003	KN-177
Lightning XB12STT	1200	BU-9003	KN-177
Ulysses XB12X	1168	BU-9003	KN-177
Ulysses XB12XT	1168	BU-9003	KN-177
2007 BUELL			
Blast	480	BU-5000	KN-177
Firebolt XB9R	961	BU-9003	KN-177
Firebolt XB12R	1168	BU-9003	KN-177
Lightning CityX XB9SX	900	BU-9003	KN-177
Lightning Long XB12SS	1200	BU-9003	KN-177
Lightning XB12S	1200	BU-9003	KN-177
Lightning XB12SCG	1200	BU-9003	KN-177
Ulysses XB12X	1168	BU-9003	KN-177
2006 BUELL			
Blast	480	BU-5000	KN-177
Firebolt XB9R	961	BU-9003	KN-177
Firebolt XB12R	1168	BU-9003	KN-177
Lightning CityX XB9SX	900	BU-9003	KN-177
Lightning Long XB12SS	1200	BU-9003	KN-177
Lightning XB12S	1200	BU-9003	KN-177
Lightning XB12SCG	1200	BU-9003	KN-177
Ulysses XB12X	1168	BU-9003	KN-177
2005 BUELL			
Blast	480	BU-5000	KN-177
Firebolt XB9R	961	BU-9003	KN-177
Firebolt XB12R	1168	BU-9003	KN-177
Lightning CityX XB9SX	900	BU-9003	KN-177
Lightning XB12S	1200	BU-9003	KN-177
Lightning XB12SCG	1200	BU-9003	KN-177
2004 BUELL			
Blast	480	BU-5000	KN-177
Firebolt XB9R	961	BU-9003	KN-177
Firebolt XB12R	1168	BU-9003	KN-177
Lightning XB9S	900	BU-9003	KN-177
Lightning XB12S	1200	BU-9003	KN-177
2003 BUELL			
Blast	480	BU-5000	KN-177
Firebolt XB9R	961	BU-9003	KN-177
Lightning XB9S	900	BU-9003	KN-177
2002 BUELL			
Blast	480	BU-5000	KN-177
Firebolt XB9R	1131	BU-9003	KN-177
M2 Cyclone	1168	BU-1297	KN-171B
		BU-1297	KN-171C
S3T Thunderbolt	1168	BU-1297	KN-177
X1 Lightning	1200	BU-1297	KN-171B
		BU-1297	KN-171C

Vehicle	Engine Type	Air Filter	Oil Filter
2001 BUELL			
Blast	480	BU-5000	KN-177
M2 Cyclone	1168	BU-1297	KN-171B
		BU-1297	KN-171C
M2 Cyclone Low	1200	BU-1297	KN-171B
		BU-1297	KN-171C
S1 Lightning	1200	BU-1297	KN-177
S2T Thunderbolt	1200	BU-1297	KN-177
S3 Thunderbolt	1168	BU-1297	KN-177
S3T Thunderbolt	1168	BU-1297	KN-177
X1 Lightning	1200	BU-1297	KN-171B
		BU-1297	KN-171C
2000 BUELL			
Blast	480	BU-5000	KN-177
M2 Cyclone	1168	BU-1297	KN-171B
		BU-1297	KN-171C
S1 Lightning	1200	BU-1297	KN-177
S3 Thunderbolt	1168	BU-1297	KN-177
S3T Thunderbolt	1168	BU-1297	KN-177
X1 Lightning	1200	BU-1297	KN-171B
		BU-1297	KN-171C
1999 BUELL			
M2 Cyclone	1168	BU-1297	KN-171B
		BU-1297	KN-171C
S1 Lightning	1168	BU-1297	KN-171B
		BU-1297	KN-171C
S2 Thunderbolt	1200	BU-1297	KN-171B
		BU-1297	KN-171C
S3 Thunderbolt	1168	BU-1297	KN-171B
		BU-1297	KN-171C
S3T Thunderbolt	1168	BU-1297	KN-171B
		BU-1297	KN-171C
X1 Lightning	1200	BU-1297	KN-171B
		BU-1297	KN-171C
1998 BUELL			
M2 Cyclone	1168	BU-1297	KN-171B
		BU-1297	KN-171C
S1 Lightning	1168	BU-1297	KN-171B
		BU-1297	KN-171C
S1 White Lightning	1200	BU-1297	KN-171B
		BU-1297	KN-171C
S2 Thunderbolt	1200	BU-1297	KN-171B
		BU-1297	KN-171C
S2T Thunderbolt	1200		KN-171B
			KN-171C
S3 Thunderbolt	1168	BU-1297	KN-171B
		BU-1297	KN-171C
S3T Thunderbolt	1168	BU-1297	KN-171B
		BU-1297	KN-171C
1997 BUELL			
M2 Cyclone	1168	BU-1297	KN-171B
		BU-1297	KN-171C
S1 Lightning	1168	BU-1297	KN-171B
		BU-1297	KN-171C
S2 Thunderbolt	1200		KN-171B
			KN-171C
S2T Thunderbolt	1200		KN-171B
			KN-171C
S3 Thunderbolt	1168	BU-1297	KN-171B
		BU-1297	KN-171C
S3T Thunderbolt	1168	BU-1297	KN-171B
		BU-1297	KN-171C
1996 BUELL			
S1 Lightning	1168	BU-1297	KN-171B
		BU-1297	KN-171C
S2 Thunderbolt	1168		KN-171B
			KN-171C
S2T Thunderbolt	1168		KN-171B
			KN-171C
1995 BUELL			
S2 Thunderbolt	1168		KN-171B
			KN-171C
2013 BUICK			
Enclave	3.6L V6 F/I	33-2394	HP-2011
LaCrosse	3.6L V6 F/I	33-2442	HP-2011
Regal	2.0L L4 F/I	33-2442	HP-7000
Regal	2.4L L4 F/I	33-2442	HP-7000
Verano	2.0L L4 F/I	33-2964	HP-7000
Verano	2.4L L4 F/I	33-2966	HP-7000
2012 BUICK			
Enclave	3.6L V6 F/I	33-2394	HP-2011
LaCrosse	2.4L L4 F/I	33-2442	HP-7000
LaCrosse	3.6L V6 F/I	33-2442	HP-2011
Lucerne	3.9L V6 F/I	33-2296	
Lucerne	4.6L V8 F/I	33-2296	
Regal	2.0L L4 F/I	33-2442	HP-7000
Regal	2.4L L4 F/I	33-2442	HP-7000
Verano	2.4L L4 F/I	33-2966	HP-7000
2011 BUICK			
Enclave	3.6L V6 F/I	33-2394	HP-2011
LaCrosse	2.4L L4 F/I	33-2442	HP-7000
LaCrosse	3.6L V6 F/I	33-2442	HP-2011
Lucerne	3.9L V6 F/I	33-2296	HP-2006
Lucerne	4.6L V8 F/I	33-2296	HP-2006
Regal	2.0L L4 F/I	33-2442	HP-7000
Regal	2.4L L4 F/I	33-2442	HP-7000
2010 BUICK			
Enclave	3.6L V6 F/I	33-2394	HP-1017
LaCrosse	2.4L L4 F/I	33-2442	HP-7000
LaCrosse	3.0L V6 F/I	33-2442	HP-1017
LaCrosse	3.6L V6 F/I	33-2442	HP-1017
Lucerne	3.9L V6 F/I	33-2296	HP-2006
Lucerne	4.6L V8 F/I	33-2296	HP-2006
2009 BUICK			
Allure	3.8L V6 F/I		HP-1001
Enclave	3.6L V6 F/I	33-2394	HP-1017
LaCrosse	3.8L V6 F/I	33-2316	HP-1001
Lucerne	3.9L V6 F/I	33-2296	HP-2006
Lucerne	4.6L V8 F/I	33-2296	HP-2006
2008 BUICK			
Allure	3.8L V6 F/I	33-2316	HP-1001
Allure	5.3L V8 F/I		HP-1017
Enclave	3.6L V6 F/I	33-2394	HP-1017
LaCrosse	3.6L V6 F/I	33-2316	HP-2006
LaCrosse	3.8L V6 F/I	33-2316	HP-1001
LaCrosse	5.3L V8 F/I	33-2334	HP-1017
Lucerne	3.8L V6 F/I	33-2296	HP-1001
Lucerne	4.6L V8 F/I	33-2296	HP-2006
Rainier	5.3L V8 F/I	E-1009	HP-1017
2007 BUICK			
Allure	3.6L V6 F/I	33-2316	HP-1017
Allure	3.8L V6 F/I	33-2316	HP-1001
LaCrosse	3.6L V6 F/I	33-2316	HP-2006

*Indicates 2 filters required ♦ - Intake kit available - see page 80 Applications updated daily at knfilters.com

Vehicle	Engine Type	Air Filter	Oil Filter
2007 BUICK			
LaCrosse	3.8L V6 F/I	33-2316	HP-1001
Lucerne	3.8L V6 F/I	33-2296	HP-1001
Lucerne	4.6L V8 F/I	33-2296	HP-2006
Rainier	4.2L L6 F/I	E-1009	HP-2006
Rainier	5.3L V8 F/I	E-1009	HP-1017
Rendezvous	3.5L V6 F/I	33-2318	HP-1001
Terraza	3.9L V6 F/I	33-2318	HP-2006
2006 BUICK			
Allure	3.8L V6 F/I		HP-1001
LaCrosse	3.6L V6 F/I	33-2316	HP-2006
LaCrosse	3.8L V6 F/I	33-2316	HP-1001
Lucerne	3.8L V6 F/I	33-2296	HP-1001
Lucerne	4.6L V8 F/I	33-2296	HP-2006
Rainier	4.2L L6 F/I	E-1009	HP-2006
Rainier	5.3L V8 F/I	E-1009	HP-1007
Rendezvous	3.5L V6 F/I	33-2318	HP-1001
Rendezvous	3.6L V6 F/I	33-2318	HP-2006
Terraza	3.5L V6 F/I	33-2318	HP-1001
2005 BUICK			
Allure	3.6L V6 F/I		HP-2006
Allure	3.8L V6 F/I		HP-1001
Century	3.1L V6 F/I	33-2141-1	HP-1001
LaCrosse	3.6L V6 F/I	33-2316	HP-2006
LaCrosse	3.8L V6 F/I	33-2316	HP-1001
LeSabre	3.8L V6 F/I	33-2141-1	HP-1001
Park Avenue	3.8L V6 F/I	33-2086	HP-1001
Rainier	4.2L L6 F/I	E-1009	HP-2006
Rainier	5.3L V8 F/I	E-1009	HP-1007
Rendezvous	3.4L V6 F/I	33-2156	HP-1001
Rendezvous	3.6L V6 F/I	33-2318	HP-2006
Terraza	3.5L V6 F/I	33-2318	HP-1001
2004 BUICK			
Century	3.1L V6 F/I	33-2141-1	HP-1001
LeSabre	3.8L V6 F/I	33-2141-1	HP-1001
Park Avenue	3.8L V6 F/I	33-2086	HP-1001
Rainier	4.2L L6 F/I	E-1009	HP-2006
Rainier	5.3L V8 F/I	E-1009	HP-1007
Regal	3.8L V6 F/I	33-2141-1	HP-1001
Rendezvous	3.4L V6 F/I	33-2156	HP-1001
Rendezvous	3.6L V6 F/I		HP-2006
2003 BUICK			
Century	3.1L V6 F/I	33-2141-1	HP-1001
LeSabre	3.8L V6 F/I	33-2141-1	HP-1001
Park Avenue	3.8L V6 F/I	33-2086	HP-1001
Regal	3.8L V6 F/I	33-2141-1	HP-1001
Rendezvous	3.4L V6 F/I	33-2156	HP-1001
2002 BUICK			
Century	3.1L V6 F/I	33-2141-1	HP-1001
LeSabre	3.8L V6 F/I	33-2141-1	HP-1001
Park Avenue	3.8L V6 F/I	33-2086	HP-1001
Regal	3.8L V6 F/I	33-2141-1	HP-1001
Rendezvous	3.4L V6 F/I	33-2156	HP-1001
2001 BUICK			
Century	3.1L V6 F/I	33-2141-1	HP-1001
LeSabre	3.8L V6 F/I	33-2141-1	HP-1001
Park Avenue	3.8L V6 F/I	33-2086	HP-1001
Regal	3.8L V6 F/I	33-2141-1	HP-1001
2000 BUICK			
Century	3.1L V6 F/I	33-2141-1	HP-1001
LeSabre	3.8L V6 F/I	33-2141-1	HP-1001
2000 BUICK			
Park Avenue	3.8L V6 F/I	33-2086	HP-1001
Regal	3.0L V6 F/I	33-2141-1	
Regal	3.8L V6 F/I	33-2141-1	HP-1001
1999 BUICK			
Century	3.1L V6 F/I	33-2141-1	HP-1001
LeSabre	3.8L V6 F/I	33-2086	HP-1001
Park Avenue	3.8L V6 F/I	33-2086	HP-1001
Regal	3.8L V6 F/I	33-2141-1	HP-1001
Riviera	3.8L V6 F/I	33-2250	HP-1001
1998 BUICK			
Century	3.1L V6 F/I	33-2063-1	HP-1001
LeSabre	3.8L V6 F/I	33-2086	HP-1001
Park Avenue	3.8L V6 F/I	33-2086	HP-1001
Regal	3.8L V6 F/I	33-2063-1	HP-1001
Riviera	3.8L V6 F/I	33-2250	HP-1001
Skylark	2.4L L4 F/I		HP-1007
Skylark	3.1L V6 F/I	33-2068	HP-1001
1997 BUICK			
Century	3.1L V6 F/I	33-2063-1	HP-1001
LeSabre	3.8L V6 F/I	33-2086	HP-1001
Park Avenue	3.8L V6 F/I	33-2086	HP-1001
Regal	3.8L V6 F/I	33-2063-1	HP-1001
Riviera	3.8L V6 F/I	33-2086	HP-1001
Skylark	3.1L V6 F/I	33-2068	HP-1001
1996 BUICK			
Century	2.2L L4 F/I	E-0850	HP-1001
Century	3.1L V6 F/I	E-0890	HP-1001
LeSabre	3.8L V6 F/I	33-2086	HP-1001
Park Avenue	3.8L V6 F/I	33-2086	HP-1001
Regal	3.1L V6 F/I	33-2063-1	HP-1001
Regal	3.8L V6 F/I	33-2063-1	HP-1001
Riviera	3.8L V6 F/I	33-2086	HP-1001
Roadmaster	5.7L V8 F/I	33-2057	HP-2001
Skylark	2.4L L4 F/I	33-2068	HP-1007
Skylark	3.1L V6 F/I	33-2068	HP-1001
1995 BUICK			
Century	2.2L L4 F/I	E-0850	HP-1001
Century	3.1L V6 F/I	E-0890	HP-1001
LeSabre	3.8L V6 F/I	33-2086	HP-1001
Park Avenue	3.8L V6 F/I	33-2086	HP-1001
Regal	3.1L V6 F/I	33-2063-1	HP-1001
Regal	3.8L V6 F/I	33-2063-1	HP-1001
Riviera	3.8L V6 F/I	33-2086	HP-1001
Roadmaster	5.7L V8 F/I	33-2057	HP-2001
1994 BUICK			
Century	2.2L L4 F/I	E-0850	HP-1001
Century	3.1L V6 F/I	E-0890	HP-1001
LeSabre	3.8L V6 F/I	33-2086	HP-1001
Park Avenue	3.8L V6 F/I		HP-1001
Regal	3.1L V6 F/I	33-2063-1	HP-1001
Regal	3.8L V6 F/I	33-2063-1	HP-1001
Roadmaster	5.7L V8 F/I	33-2057	HP-2001
Skylark	3.1L V6 F/I	33-2068	HP-1001
1993 BUICK			
Century	3.3L V6 F/I	33-2022	HP-1001
LeSabre	3.8L V6 F/I	33-2086	HP-1001
Park Avenue	3.8L V6 F/I		HP-1001
Regal	3.1L V6 F/I	33-2038	HP-2001
Regal	3.8L V6 F/I	E-0890	HP-1001
Riviera	3.8L V6 F/I	33-2022	HP-1001

Vehicle	Engine Type	Air Filter	Oil Filter
1993 BUICK			
Roadmaster	5.7L V8 F/I	33-2051	HP-2002
Skylark	3.3L V6 F/I	33-2022	HP-1001
1992 BUICK			
Century	3.3L V6 F/I	33-2022	HP-1001
LeSabre	3.8L V6 F/I	33-2086	HP-1001
Park Avenue	3.8L V6 F/I		HP-1001
Regal	3.1L V6 F/I	33-2038	HP-2001
Regal	3.8L V6 F/I	E-0890	HP-1001
Riviera	3.8L V6 F/I	33-2022	HP-1001
Roadmaster	5.7L V8 F/I	33-2051	HP-2002
Skylark	3.3L V6 F/I	33-2022	HP-1001
1991 BUICK			
Century	3.3L V6 F/I	33-2022	HP-1001
LeSabre	3.8L V6 F/I	33-2022	HP-1001
Park Avenue	3.8L V6 F/I		HP-1001
Regal	3.8L V6 F/I	E-0890	HP-1001
Roadmaster	5.0L V8 F/I	33-2051	HP-2002
1990 BUICK			
Century	3.3L V6 F/I	33-2022	HP-1001
Electra	3.8L V6 F/I	33-2022	HP-1001
LeSabre	3.8L V6 F/I	33-2022	HP-1001
Reatta	3.8L V6 F/I	33-2022	HP-1001
Riviera	3.8L V6 F/I	33-2022	HP-1001
1989 BUICK			
Century	3.3L V6 F/I	33-2022	HP-1001
LeSabre	3.8L V6 F/I	33-2022	HP-1001
LeSabre	5.0L V8 CARB	E-1500	HP-2006
Reatta	3.8L V6 F/I	33-2022	HP-1001
Regal	2.8L V6 F/I	33-2038	HP-2001
Regal	3.1L V6 F/I	33-2038	HP-2001
Riviera	3.8L V6 F/I	33-2022	HP-1001
1988 BUICK			
Electra	3.8L V6 F/I	33-2022	HP-1001
LeSabre	3.8L V6 F/I	33-2022	HP-1001
Reatta	3.8L V6 F/I	33-2022	HP-1001
Regal	2.8L V6 F/I	E-0850	HP-2001
1987 BUICK			
LeSabre	3.8L V6 F/I	33-2022	HP-1001
Regal	3.8L V6 CARB	E-1150	HP-1001
Regal	3.8L V6 F/I	E-0870	HP-1001
Regal	5.0L V8 CARB	E-1500	HP-2006
Skylark	2.5L L4 F/I	E-1015	HP-1001
1986 BUICK			
Regal	3.8L V6 CARB	E-1150	HP-1001
Regal	3.8L V6 F/I	E-0870	HP-1001
Regal	5.0L V8 CARB	E-1500	HP-2006
1985 BUICK			
Century	4.3L V6 DSL	E-1577	HP-2001
LeSabre	5.0L V8 CARB	E-1500	HP-2006
Regal	3.8L V6 CARB	E-1150	HP-1001
Regal	3.8L V6 F/I	E-0870	HP-1001
Regal	5.0L V8 CARB		HP-2006
1984 BUICK			
Century	4.3L V6 DSL	E-1577	HP-2001
Regal	3.8L V6 CARB	E-1150	HP-1001
Regal	3.8L V6 F/I	E-0870	HP-1001
1983 BUICK			
Century	4.3L V6 DSL	E-1577	HP-2001
Electra	5.0L V8 CARB	E-1500	HP-2006
1983 BUICK			
Regal	3.8L V6 2 BBL.	E-1150	HP-1001
Regal	3.8L V6 4 BBL.	E-0870	HP-1001
Riviera	5.7L V8 DSL	E-1650	HP-2006
Skylark	2.5L L4 CARB		HP-1001
Skylark	2.5L L4 F/I	E-1015	HP-1001
1982 BUICK			
Regal	3.8L V6 2 BBL.	E-1150	HP-1001
1981 BUICK			
Regal	3.8L V6 2 BBL.	E-1150	HP-1001
Regal	3.8L V6 4 BBL.	E-0870	HP-1001
1979 BUICK			
Electra	350 V8 CARB - VIN R	E-1650	HP-2006
LeSabre	350 V8 CARB - VIN R	E-1650	HP-2006
LeSabre	350 V8 CARB - VIN X	E-1500	HP-2003
Regal	231 V6 CARB - VIN 2	E-1150	HP-1001
Regal	231 V6 CARB - VIN 3	E-0870	HP-1001
Regal	231 V6 CARB - VIN A	E-1150	HP-1001
1978 BUICK			
Electra	403 V8 CARB	E-1650	HP-2006
LeSabre	350 V8 CARB - VIN R	E-1650	HP-2006
Regal	231 V6 CARB - exc. Turbo	E-1450	HP-1001
Regal	231 V6 CARB - Turbo	E-0870	HP-1001
Regal	305 V8 CARB		HP-2002
1977 BUICK			
Century	350 V8 CARB - VIN R	E-1650	HP-2003
LeSabre	350 V8 CARB - VIN R	E-1650	HP-2003
Regal	350 V8 CARB - VIN R	E-1650	HP-2003
1974 BUICK			
Century	350 V8 CARB - GS Series	E-1650	
1973 BUICK			
LeSabre	455 V8 CARB	E-1650	HP-2003
1972 BUICK			
Centurion	455 V8 CARB	E-1650	HP-2003
Electra	455 V8 CARB	E-1650	HP-2003
GS 455	455 V8 CARB	E-1650	HP-2003
Riviera	455 V8 CARB	E-1650	HP-2003
Skylark	350 V8 CARB	E-1450	HP-2003
Skylark	455 V8 CARB	E-1650	HP-2003
1971 BUICK			
Centurion	455 V8 CARB	E-1650	HP-2003
Electra	455 V8 CARB	E-1650	HP-2003
GS 455	455 V8 CARB	E-1650	HP-2003
Riviera	455 V8 CARB	E-1650	HP-2003
Skylark	350 V8 CARB	E-1450	HP-2003
Skylark Custom	350 V8 CARB	E-1450	HP-2003
1970 BUICK			
Electra	455 V8 CARB	E-1650	HP-2003
GS	350 V8 CARB	E-1650	HP-2003
GS 455	455 V8 CARB	E-1650	HP-2003
Skylark	350 V8 CARB		HP-2003
Skylark	350 V8 CARB - exc. GS Series	E-1450	HP-2003
Skylark	350 V8 CARB - GS Series	E-1650	HP-2003
1969 BUICK			
GS 350	350 V8 4 BBL.	E-1650	HP-2003
Skylark	350 V8 CARB	E-1450	HP-2003

*Indicates 2 filters required ♦ - Intake kit available - see page 80 Applications updated daily at knfilters.com

Vehicle	Engine Type	Air Filter	Oil Filter
1968 BUICK			
Electra	430 V8 CARB	E-1650	HP-2003
GS 350	350 V8 4 BBL.	E-1650	HP-2003
GS 400	400 V8 CARB	E-1650	HP-2003
Riviera	430 V8 CARB	E-1650	HP-2003
Skylark	350 V8 2 BBL.	E-1070	HP-2003
Skylark	350 V8 4 BBL.	E-1650	HP-2003
1967 BUICK			
Riviera	430 V8 CARB	E-1360	HP-2003
Skylark	340 V8 CARB		HP-2003
Wildcat	430 V8 CARB	E-1360	HP-2003
1966 BUICK			
Gran Sport	401 V8 CARB	E-1910	
Riviera	425 V8 CARB	E-1360	HP-2003
1965 BUICK			
Gran Sport	401 V8 CARB	E-1910	
Riviera	401 V8 CARB	E-1360	HP-2003
Riviera	425 V8 CARB	E-1360	HP-2003
Skylark	225 V6 CARB	E-1070	HP-2003
Skylark	300 V8 CARB		HP-2003
Skylark	401 V8 CARB	E-1910	HP-2003
Wildcat	425 V8 CARB	E-1360	HP-2003
1964 BUICK			
Riviera	425 V8 CARB	E-1520	HP-2003
Skylark	300 V8 CARB	E-1520	HP-2003
Wildcat	401 V8 CARB	E-1520	HP-2003
1963 BUICK			
Wildcat	401 V8 CARB	E-1520	
1962 BUICK			
Skylark	215 V8 CARB	E-1520	HP-2003
2013 CADILLAC			
ATS	2.0L L4 F/I		HP-1017
ATS	2.5L L4 F/I		HP-1017
CTS-V	6.2L V8 F/I	33-2411	HP-1017
Escalade	6.0L V8 F/I	33-2135	HP-1017
Escalade	6.2L V8 F/I	33-2135 ♦	HP-1017
SRX	3.6L V6 F/I	33-2444	HP-2011
XTS	3.6L V6 F/I		HP-2011
2012 CADILLAC			
CTS-V	6.2L V8 F/I	33-2411	HP-1017
Escalade	6.0L V8 F/I	33-2135	HP-1017
Escalade	6.2L V8 F/I	33-2135 ♦	HP-1017
SRX	3.6L V6 F/I	33-2444	HP-2011
2011 CADILLAC			
CTS-V	6.2L V8 F/I	33-2411	HP-1017
DTS	4.6L V8 F/I	33-2296	HP-2006
Escalade	6.0L V8 F/I	33-2135	HP-1017
Escalade	6.2L V8 F/I	33-2135 ♦	HP-1017
SRX	3.0L V6 F/I	33-2444	HP-2011
2010 CADILLAC			
CTS-V	6.2L V8 F/I	33-2411	HP-1017
DTS	4.6L V8 F/I	33-2296	HP-2006
Escalade	6.0L V8 F/I	33-2135	HP-1017
Escalade	6.2L V8 F/I	33-2135 ♦	HP-1017
SRX	3.0L V6 F/I	33-2444	HP-1017
STS	4.6L V8 F/I	33-2356	HP-2006
2009 CADILLAC			
CTS-V	6.2L V8 F/I	33-2411	HP-1017
DTS	4.6L V8 F/I	33-2296	HP-2006
2009 CADILLAC			
Escalade	6.0L V8 F/I	33-2135	HP-1017
Escalade	6.2L V8 F/I	33-2135 ♦	HP-1017
SRX	4.6L V8 F/I	33-2356	HP-2006
STS	4.6L V8 F/I	33-2356	HP-2006
STS-V	4.4L V8 F/I	E-1995	HP-2010
XLR	4.4L V8 F/I	33-2305*	HP-2010
XLR	4.6L V8 F/I	33-2305*	HP-2006
2008 CADILLAC			
CTS	2.8L V6 F/I	33-2411	
DTS	4.6L V8 F/I	33-2296	HP-2006
Escalade	6.2L V8 F/I	33-2135 ♦	HP-1017
SRX	4.6L V8 F/I	33-2356	HP-2006
STS	4.6L V8 F/I	33-2356	HP-2006
STS-V	4.4L V8 F/I	E-1995	
XLR	4.4L V8 F/I	33-2305*	
XLR	4.6L V8 F/I	33-2305*	HP-2006
2007 CADILLAC			
CTS-V	6.0L V8 F/I	33-2649 ♦	HP-1017
DTS	4.6L V8 F/I	33-2296	HP-2006
Escalade	6.2L V8 F/I	33-2135 ♦	HP-1017
SRX	4.6L V8 F/I	33-2356	HP-2006
STS	4.6L V8 F/I	33-2356	HP-2006
STS-V	4.4L V8 F/I	E-1995	
XLR	4.4L V8 F/I	33-2305*	
XLR	4.6L V8 F/I	33-2305*	HP-2006
2006 CADILLAC			
CTS-V	6.0L V8 F/I	33-2649 ♦	HP-1007
DTS	4.6L V8 F/I	33-2296	HP-2006
Escalade	6.0L V8 F/I	33-2135 ♦	HP-1007
SRX	4.6L V8 F/I	33-2356	HP-2006
STS	4.6L V8 F/I	33-2356	HP-2006
STS-V	4.4L V8 F/I	E-1995	
XLR	4.6L V8 F/I	33-2305*	HP-2006
2005 CADILLAC			
CTS-V	5.7L V8 F/I	33-2649 ♦	HP-1007
DeVille	4.6L V8 F/I	33-2063-1	HP-2006
Escalade	5.3L V8 F/I	33-2135 ♦	HP-1007
Escalade	6.0L V8 F/I	33-2135 ♦	HP-1007
SRX	4.6L V8 F/I	33-2356	HP-2006
STS	4.6L V8 F/I	33-2356	HP-2006
XLR	4.6L V8 F/I	33-2305*	HP-2006
2004 CADILLAC			
CTS	3.2L V6 F/I	33-2251 ♦	
CTS-V	5.7L V8 F/I	33-2649 ♦	HP-1007
DeVille	4.6L V8 F/I	33-2063-1	HP-2006
Escalade	5.3L V8 F/I	33-2129 ♦	HP-1007
Escalade	6.0L V8 F/I	33-2135 ♦	HP-1007
Seville	4.6L V8 F/I	33-2063-1	HP-2006
SRX	4.6L V8 F/I	33-2356	HP-2006
XLR	4.6L V8 F/I		HP-2006
2003 CADILLAC			
CTS	3.2L V6 F/I	33-2251 ♦	
DeVille	4.6L V8 F/I	33-2063-1	HP-2006
Escalade	5.3L V8 F/I	33-2129 ♦	HP-1007
Escalade	6.0L V8 F/I	33-2135 ♦	HP-1007
Seville	4.6L V8 F/I	33-2063-1	HP-2006
2002 CADILLAC			
DeVille	4.6L V8 F/I	33-2063-1	HP-2006
Eldorado	4.6L V8 F/I		HP-2006
Escalade	5.3L V8 F/I	33-2129 ♦	HP-2006

*Indicates 2 filters required ♦ - Intake kit available - see page 80 Applications updated daily at knfilters.com

Vehicle	Engine Type	Air Filter	Oil Filter
2002 CADILLAC			
Escalade	6.0L V8 F/I	33-2135♦	HP-2006
Seville	4.6L V8 F/I	33-2063-1	HP-2006
2001 CADILLAC			
DeVille	4.6L V8 F/I	33-2063-1	HP-2006
Eldorado	4.6L V8 F/I		HP-2006
Seville	4.6L V8 F/I	33-2063-1	HP-2006
2000 CADILLAC			
DeVille	4.6L V8 F/I	33-2063-1	HP-2006
Eldorado	4.6L V8 F/I		HP-2006
Escalade	5.7L V8 F/I	E-1796	HP-2001
Seville	4.6L V8 F/I	33-2063-1	HP-2006
1999 CADILLAC			
DeVille	4.6L V8 F/I		HP-2006
Eldorado	4.6L V8 F/I		HP-2006
Escalade	5.7L V8 F/I	E-1796	HP-2001
Seville	4.6L V8 F/I	33-2063-1	HP-2006
1998 CADILLAC			
Catera	3.0L V6 F/I	33-2734	
Catera	3.0L V6 F/I - Spin On	33-2734	HP-1001
DeVille	4.6L V8 F/I		HP-2006
Eldorado	4.6L V8 F/I		HP-2006
Seville	4.6L V8 F/I	33-2063-1	HP-2006
1997 CADILLAC			
Catera	3.0L V6 F/I	33-2734	
Catera	3.0L V6 F/I - Spin On	33-2734	HP-1001
DeVille	4.6L V8 F/I		HP-2006
Eldorado	4.6L V8 F/I		HP-2006
Seville	4.6L V8 F/I		HP-2006
1996 CADILLAC			
DeVille	4.6L V8 F/I		HP-2006
Eldorado	4.6L V8 F/I		HP-2006
Fleetwood	5.7L V8 F/I	33-2057	HP-2001
Seville	4.6L V8 F/I		HP-2006
1995 CADILLAC			
DeVille	4.6L V8 F/I	33-2086	HP-2006
DeVille	4.9L V8 F/I	33-2086	HP-2006
Eldorado	4.6L V8 F/I	33-2086	HP-2006
Fleetwood	5.7L V8 F/I	33-2057	HP-2001
Seville	4.6L V8 F/I		HP-2006
1994 CADILLAC			
DeVille	4.6L V8 F/I	33-2086	
DeVille	4.9L V8 F/I		HP-2006
Eldorado	4.6L V8 F/I	33-2086	HP-2006
Fleetwood	5.7L V8 F/I	33-2057	HP-2001
Seville	4.6L V8 F/I		HP-2006
1993 CADILLAC			
Allante	4.6L V8 F/I		HP-2006
DeVille	4.9L V8 F/I		HP-2006
Eldorado	4.6L V8 F/I	33-2086	HP-2006
Eldorado	4.9L V8 F/I	33-2086	HP-2006
Fleetwood	5.7L V8 F/I	E-1500	HP-2002
Seville	4.6L V8 F/I		HP-2006
Seville	4.9L V8 F/I	33-2086	HP-2006
1992 CADILLAC			
Allante	4.5L V8 F/I	33-2038	HP-2006
Brougham	5.7L V8 F/I	E-1500	HP-2002
DeVille	4.9L V8 F/I		HP-2006
Eldorado	4.9L V8 F/I	33-2057	HP-2006
Fleetwood	4.9L V8 F/I		HP-2006
1992 CADILLAC			
Seville	4.9L V8 F/I	33-2086	HP-2006
1991 CADILLAC			
Brougham	5.0L V8 F/I	E-1500	HP-2002
Brougham	5.7L V8 F/I	E-1500	HP-2002
DeVille	4.9L V8 F/I		HP-2006
Eldorado	4.9L V8 F/I	33-2086	HP-2006
Seville	4.9L V8 F/I	33-2086	HP-2006
1990 CADILLAC			
Allante	4.5L V8 F/I	33-2038	HP-2006
Brougham	5.0L V8 CARB	E-1500	HP-2006
Brougham	5.7L V8 F/I	E-1500	HP-2002
DeVille	4.5L V8 F/I	33-2086	HP-2006
Eldorado	4.5L V8 F/I		HP-2006
Fleetwood	4.5L V8 F/I		HP-2006
Seville	4.5L V8 F/I		HP-2006
1989 CADILLAC			
Allante	4.5L V8 F/I	33-2038	HP-2006
Brougham	5.0L V8 CARB	E-1500	HP-2006
DeVille	4.5L V8 F/I	33-2086	HP-2006
Eldorado	4.5L V8 F/I		HP-2006
Fleetwood	4.5L V8 F/I		HP-2006
1988 CADILLAC			
Allante	4.1L V8 F/I	E-0870	HP-2006
Brougham	5.0L V8 CARB	E-1690	HP-2006
DeVille	4.5L V8 F/I	33-2086	HP-2006
Eldorado	4.5L V8 F/I		HP-2006
Fleetwood	4.5L V8 F/I		HP-2006
Seville	4.5L V8 F/I		HP-2006
1987 CADILLAC			
Allante	4.1L V8 F/I	E-0870	HP-2006
Brougham	5.0L V8 CARB		HP-2006
DeVille	4.1L V8 F/I	E-1065	HP-2006
Fleetwood	4.1L V8 F/I	E-1065	HP-2006
1986 CADILLAC			
DeVille	4.1L V8 F/I	E-1065	HP-2006
Fleetwood	5.0L V8 CARB	E-1500	HP-2006
1985 CADILLAC			
Seville	5.7L V8 DSL	E-1650	HP-2006
1983 CADILLAC			
DeVille	4.1L V8 F/I	E-1450	HP-2006
Eldorado	4.1L V8 F/I	E-1450	HP-2006
1981 CADILLAC			
Eldorado	5.7L V8 DSL	E-1650	HP-2006
1979 CADILLAC			
Eldorado	5.7L V8 F/I	E-1650	HP-2006
Seville	5.7L V8 F/I	E-1650	HP-2006
1978 CADILLAC			
DeVille	425 V8 CARB	E-1510	HP-2006
Eldorado	425 V8 CARB	E-1510	HP-2006
1977 CADILLAC			
DeVille	425 V8 CARB	E-1510	HP-2006
Eldorado	425 V8 CARB	E-1510	HP-2006
Eldorado	7.0L V8 F/I	E-1510	HP-2006
1976 CADILLAC			
DeVille	500 V8 CARB	E-1510	HP-2003
DeVille	8.2L V8 F/I	E-1510	HP-2003
Eldorado	500 V8 CARB	E-1510	HP-2003

*Indicates 2 filters required ♦ - Intake kit available - see page 80 Applications updated daily at knfilters.com

Vehicle	Engine Type	Air Filter	Oil Filter
1976 CADILLAC			
Fleetwood	500 V8 CARB		HP-2003
1975 CADILLAC			
DeVille	500 V8 CARB	E-1510	HP-2003
DeVille	8.2L V8 F/I	E-1510	HP-2003
Eldorado	500 V8 CARB	E-1510	HP-2003
1974 CADILLAC			
DeVille	472 V8 CARB	E-1510	HP-2003
Eldorado	500 V8 CARB	E-1510	HP-2003
1973 CADILLAC			
DeVille	472 V8 CARB	E-1510	HP-2003
Eldorado	500 V8 CARB	E-1510	HP-2003
1972 CADILLAC			
DeVille	472 V8 CARB	E-1510	HP-2003
Eldorado	500 V8 CARB	E-1510	HP-2003
1971 CADILLAC			
DeVille	472 V8 CARB	E-1510	HP-2003
Fleetwood	472 V8 CARB	E-1510	HP-2003
1970 CADILLAC			
DeVille	472 V8 CARB	E-1510	HP-2003
Eldorado	500 V8 CARB	E-1510	HP-2003
1969 CADILLAC			
DeVille	472 V8 CARB	E-1510	HP-2003
Eldorado	472 V8 CARB	E-1510	HP-2003
1968 CADILLAC			
Calais	472 V8 CARB	E-1510	HP-2003
DeVille	472 V8 CARB	E-1510	HP-2003
1967 CADILLAC			
DeVille	429 V8 CARB	E-1220	HP-2003
Eldorado	429 V8 CARB	E-1220	HP-2003
1966 CADILLAC			
DeVille	429 V8 CARB	E-1220	HP-2003
Eldorado	429 V8 CARB	E-1220	HP-2003
1965 CADILLAC			
DeVille	429 V8 CARB	E-1220	HP-2003
Eldorado	429 V8 CARB	E-1220	HP-2003
1964 CADILLAC			
DeVille	429 V8 CARB	E-1220	HP-2003
Series 60 Fleetwood	429 V8 CARB	E-1520	HP-2003
1963 CADILLAC			
DeVille	390 V8 CARB		HP-2003
1962 CADILLAC			
DeVille	390 V8 CARB		HP-2003
2000 CAGIVA			
Gran Canyon	900	CG-9002	
1999 CAGIVA			
Gran Canyon	900	CG-9002	KN-153
1987 CAGIVA			
Alazzurra GT Sports 650	650		KN-153
Alazzurra Sports 650	650		KN-153
1985 CAGIVA			
Elefant 650	650	CG-0100	
2013 CAN-AM			
Commander 800R	800	CM-8011	KN-152
Commander 1000	1000	CM-8011	KN-152

Vehicle	Engine Type	Air Filter	Oil Filter
2013 CAN-AM			
Outlander 500 EFI	500	CM-8012	
Outlander 650 EFI	650	CM-8012	
Outlander 800R EFI	800	CM-8012	KN-152
Outlander 1000	1000	CM-8012	KN-152
Outlander Max 500 EFI	500	CM-8012	
Outlander Max 650 EFI	650	CM-8012	
Outlander Max 800R	800	CM-8012	KN-152
Outlander Max 1000	1000	CM-8012	KN-152
Renegade 500 EFI	500	CM-8012	
Renegade 800R EFI	800	CM-8012	KN-152
Renegade 1000	1000	CM-8012	KN-152
2012 CAN-AM			
Commander 800R XT	800	CM-8011	KN-152
Commander 1000 X	1000	CM-8011	KN-152
Commander 1000 XT	1000	CM-8011	KN-152
DS450 EFI	450	CM-4508	KN-560
DS450 EFI X mx	450	CM-4508	KN-560
DS450 EFI X xc	450	CM-4508	KN-560
Outlander 400 EFI	400		KN-152
Outlander 400 EFI XT	400		KN-152
Outlander 500 EFI	500	BD-6506	KN-152
Outlander 650 EFI	650	CM-8009	KN-152
Outlander 650 EFI XT	650		KN-152
Outlander 800R EFI	800	CM-8012	KN-152
Outlander 800R EFI	800 - X mr	CM-8009	KN-152
Outlander 1000	1000	CM-8012	KN-152
Outlander Max 400 EFI	400		KN-152
Outlander Max 400 EFI XT	400		KN-152
Outlander Max 500 EFI	500	BD-6506	KN-152
Outlander Max 500 EFI XT	500		KN-152
Outlander Max 650 EFI	650	CM-8009	KN-152
Outlander Max 650 EFI XT	650		KN-152
Outlander Max 650 EFI XT-P	650		KN-152
Outlander Max 800R EFI	800	CM-8009	KN-152
Outlander Max 800R EFI LTD	800		KN-152
Outlander Max 800R EFI XT	800		KN-152
Outlander Max 800R EFI XT-P	800		KN-152
Renegade 500 EFI	500	BD-6506	KN-152
Renegade 800R EFI	800	CM-8012	KN-152
Renegade 1000	1000	CM-8012	KN-152
Spyder RS	998	CM-9908	KN-564
Spyder RT	998	CM-9910	KN-564
2011 CAN-AM			
Commander 800R	800	CM-8011	KN-152
Commander 800R XT	800	CM-8011	KN-152
Commander 1000	1000	CM-8011	KN-152
Commander 1000 X	1000	CM-8011	KN-152
Commander 1000 XT	1000	CM-8011	KN-152
DS450 EFI	450	CM-4508	KN-560
DS450 EFI X mx	450	CM-4508	KN-560
DS450 EFI X xc	450	CM-4508	KN-560
Outlander 400 EFI	400		KN-152
Outlander 400 EFI XT	400		KN-152

*Indicates 2 filters required ♦ - Intake kit available - see page 80 Applications updated daily at knfilters.com

Vehicle	Engine Type	Air Filter	Oil Filter
2011 CAN-AM			
Outlander 500 EFI	500	BD-6506	KN-152
Outlander 500 EFI XT	500	BD-6506	KN-152
Outlander 650 EFI	650	CM-8009	KN-152
Outlander 650 EFI XT	650		KN-152
Outlander 800R EFI	800	CM-8009	KN-152
Outlander 800R EFI X xc	800		KN-152
Outlander 800R EFI XT	800		KN-152
Outlander Max 400 EFI	400		KN-152
Outlander Max 400 EFI XT	400		KN-152
Outlander Max 500 EFI	500	BD-6506	KN-152
Outlander Max 500 EFI XT	500	BD-6506	KN-152
Outlander Max 650 EFI	650	CM-8009	KN-152
Outlander Max 650 EFI XT	650		KN-152
Outlander Max 800R EFI	800	CM-8009	KN-152
Outlander Max 800R EFI LTD	800		KN-152
Outlander Max 800R EFI XT	800		KN-152
Outlander Max 800R EFI XT-P	800		KN-152
Renegade 500 EFI	500	BD-6506	KN-152
Renegade 800	800	CM-8009	KN-152
Renegade 800R EFI X	800		KN-152
Renegade 800R EFI X xc	800		KN-152
RS 990 Spyder SE5	990 - 1st Filter		KN-564
RS 990 Spyder SM5	990		KN-564
RT 990 Spyder SE5	990 - 1st Filter		KN-564
RT 990 Spyder SM5	990		KN-564
Spyder RS	998	CM-9908	KN-564
Spyder RT	998	CM-9910	KN-564
2010 CAN-AM			
DS450 EFI	450	CM-4508	KN-560
DS450 EFI X mx	450	CM-4508	KN-560
DS450 EFI X xc	450	CM-4508	KN-560
Outlander 400 EFI	400		KN-152
Outlander 400 EFI XT	400		KN-152
Outlander 500 EFI	500	BD-6506	KN-152
Outlander 500 EFI XT	500	BD-6506	KN-152
Outlander 650 EFI	650	CM-8009	KN-152
Outlander 650 EFI XT	650		KN-152
Outlander 800R EFI	800	CM-8009	KN-152
Outlander 800R EFI X xc	800		KN-152
Outlander 800R EFI XT	800		KN-152
Outlander Max 400 EFI	400		KN-152
Outlander Max 400 EFI XT	400		KN-152
Outlander Max 500 EFI	500	BD-6506	KN-152
Outlander Max 500 EFI XT	500	BD-6506	KN-152
Outlander Max 650 EFI	650	CM-8009	KN-152
Outlander Max 650 EFI XT	650		KN-152
Outlander Max 800R EFI	800	CM-8009	KN-152
Outlander Max 800R EFI LTD	800		KN-152
Outlander Max 800R EFI XT	800		KN-152
Renegade 500 EFI	500	BD-6506	KN-152
Renegade 800	800	CM-8009	KN-152
Renegade 800R EFI X	800		KN-152
RS 990 Spyder SE5	990 - 1st Filter		KN-564
RS 990 Spyder SM5	990		KN-564
RT 990 Spyder SE5	990 - 1st Filter		KN-564
RT 990 Spyder SM5	990		KN-564
Spyder RS	998	CM-9908	KN-564
Spyder RT	998	CM-9910	KN-564
2009 CAN-AM			
DS450	450	CM-4508	KN-560
DS450 EFI	450	CM-4508	KN-560
DS450 EFI X mx	450	CM-4508	KN-560
DS450 EFI X xc	450	CM-4508	KN-560
GS 990 Spyder SE5	990 - 1st Filter		KN-564
GS 990 Spyder SM5	990		KN-564
Outlander 400 EFI	400		KN-152
Outlander 400 EFI XT	400		KN-152
Outlander 500 EFI	500	BD-6506	KN-152
Outlander 500 EFI XT	500	BD-6506	KN-152
Outlander 650 EFI	650	BD-6506	KN-152
Outlander 650 EFI XT	650	BD-6506	KN-152
Outlander 800R EFI	800	CM-8009	KN-152
Outlander 800R EFI XT	800		KN-152
Outlander Max 400 EFI	400		KN-152
Outlander Max 400 EFI XT	400		KN-152
Outlander Max 500 EFI XT	500	BD-6506	KN-152
Outlander Max 650 EFI XT	650	BD-6506	KN-152
Outlander Max 800R EFI	800	CM-8009	KN-152
Outlander Max 800R EFI LTD	800		KN-152
Outlander Max 800R EFI XT	800		KN-152
Renegade 500 EFI	500	BD-6506	KN-152
Renegade 800R EFI	800		KN-152
Renegade 800R EFI X	800		KN-152
Spyder	990	CM-9908	
2008 CAN-AM			
DS450	450	CM-4508	KN-560
DS450X	450	CM-4508	KN-560
GS 990 Spyder	990 - 1st Filter		KN-564
Outlander 400 H.O.	400	BD-3303	KN-152
Outlander 400 H.O. XT	400	BD-3303	KN-152
Outlander 500 H.O. EFI	500	BD-6506	KN-152
Outlander 500 H.O. EFI XT	500	BD-6506	KN-152
Outlander 650 H.O. EFI	650	BD-6506	KN-152
Outlander 650 H.O. EFI XT	650	BD-6506	KN-152

Vehicle	Engine Type	Air Filter	Oil Filter
2008 CAN-AM			
Outlander 800 H.O. EFI	800	BD-6506	KN-152
Outlander 800 H.O. EFI XT	800	BD-6506	KN-152
Outlander Max 400 H.O.	400	BD-3303	KN-152
Outlander Max 400 H.O. XT	400	BD-3303	KN-152
Outlander Max 500 H.O. EFI	500	BD-6506	KN-152
Outlander Max 500 H.O. EFI XT	500	BD-6506	KN-152
Outlander Max 650 H.O. EFI	650	BD-6506	KN-152
Outlander Max 650 H.O. EFI XT	650	BD-6506	KN-152
Outlander Max 800 H.O. EFI	800	BD-6506	KN-152
Outlander Max 800 H.O. EFI Ltd.	800	BD-6506	KN-152
Outlander Max 800 H.O. EFI XT	800	BD-6506	KN-152
Renegade 500 EFI	500	BD-6506	KN-152
Renegade 800	800	BD-6506	KN-152
Renegade 800 X	800	BD-6506	KN-152
Spyder	990	CM-9908	
2007 CAN-AM			
DS650X	650	BD-6500	KN-152
Outlander 400 H.O.	400	BD-3303	KN-152
Outlander 400 H.O. XT	400	BD-3303	KN-152
Outlander 500 H.O. EFI	500	BD-6506	KN-152
Outlander 500 H.O. EFI XT	500	BD-6506	KN-152
Outlander 650 H.O. EFI	650	BD-6506	KN-152
Outlander 650 H.O. EFI XT	650	BD-6506	KN-152
Outlander 800 H.O. EFI	800	BD-6506	KN-152
Outlander 800 H.O. EFI XT	800	BD-6506	KN-152
Outlander Max 400 H.O.	400	BD-3303	KN-152
Outlander Max 400 H.O. XT	400	BD-3303	KN-152
Outlander Max 500 H.O. EFI	500	BD-6506	KN-152
Outlander Max 500 H.O. EFI XT	500	BD-6506	KN-152
Outlander Max 650 H.O. EFI	650	BD-6506	KN-152
Outlander Max 650 H.O. EFI XT	650	BD-6506	KN-152
Outlander Max 800 H.O. EFI	800	BD-6506	KN-152
Outlander Max 800 H.O. EFI Ltd.	800	BD-6506	KN-152
Outlander Max 800 H.O. EFI XT	800	BD-6506	KN-152
Renegade 800	800	BD-6506	KN-152
1982 CAN-AM			
Qualifier IV	175	CM-0300	
1980 CAN-AM			
MX6	250	CM-0300	
1979 CAN-AM			
MX5	250	CM-0300	

Vehicle	Engine Type	Air Filter	Oil Filter
2002 CANNONDALE			
440	440	CD-4402	
2013 CHEVROLET			
Avalanche	5.3L V8 F/I	33-2129 ♦	HP-1017
Camaro	6.2L V8 F/I	33-2434 ♦	HP-1017
Camaro ZL1	6.2L V8 F/I	33-2434 ♦	HP-1017
Caprice	6.0L V8 F/I		HP-1017
Captiva	2.4L L4 F/I	33-2956	HP-7000
Corvette	6.2L V8 F/I	E-0782 ♦	HP-1017
Corvette Z06	7.0L V8 F/I	E-0782	HP-1017
Corvette ZR-1	6.2L V8 F/I	E-0786 ♦	HP-1017
Cruze	1.4L L4 F/I	33-2966 ♦	
Cruze	1.6L L4 F/I	33-2964	
Cruze	1.7L L4 DSL	33-2966	
Cruze	1.8L L4 F/I	33-2964	
Cruze	2.0L L4 DSL	33-2966	
Equinox	2.4L L4 F/I	33-2439 ♦	HP-7000
Equinox	3.6L V6 F/I	33-2439	HP-2011
Express 1500	5.3L V8 F/I	E-1986	HP-1017
Express 2500	4.8L V8 F/I	E-1986	HP-1017
Express 2500	6.0L V8 F/I	E-1986	HP-1017
Impala	3.6L V6 F/I	33-2475	HP-2011
Malibu	2.0L L4 F/I		HP-1017
Malibu	2.4L L4 F/I	33-2442	HP-7000
Malibu	2.5L L4 F/I		HP-1017
Orlando	2.4L L4 F/I		HP-7000
Silverado 1500	4.3L V6 F/I	33-2129	HP-1001
Silverado 1500	4.8L V8 F/I	33-2129 ♦	HP-1017
Silverado 1500	5.3L V8 F/I	33-2129 ♦	HP-1017
Silverado 1500	6.0L V8 F/I	33-2135	HP-1017
Silverado 1500	6.2L V8 F/I	33-2135 ♦	HP-1017
Silverado 1500 Hybrid	6.0L V8 F/I	33-2135	HP-1017
Silverado 2500 HD	6.0L V8 F/I	33-2135	HP-1017
Silverado 2500 HD	6.6L V8 DSL	33-2466	HP-3003
Silverado 3500 HD	6.0L V8 F/I	33-2135	HP-1017
Silverado 3500 HD	6.6L V8 DSL	33-2466	HP-3003
Sonic	1.4L L4 F/I	33-2476	
Sonic	1.8L L4 F/I	33-2476	
Suburban 1500	5.3L V8 F/I	33-2129 ♦	HP-1017
Suburban 2500	6.0L V8 F/I	33-2135	HP-1017
Tahoe	5.3L V8 F/I	33-2129 ♦	
Tahoe Hybrid	6.0L V8 F/I	33-2135	
Traverse	3.6L V6 F/I	33-2394	HP-2011
Volt	1.4L L4 F/I	33-2464	
2012 CHEVROLET			
Avalanche	5.3L V8 F/I	33-2129 ♦	HP-1017
Aveo	1.2L L4 F/I	33-2476	
Aveo	1.4L L4 F/I	33-2476	
Aveo	1.6L L4 F/I - Non-US	33-2476	
Aveo	1.6L L4 F/I - US	33-2320	
Aveo5	1.6L L4 F/I	33-2320	
Camaro	6.2L V8 F/I	33-2434 ♦	HP-1017
Camaro ZL1	6.2L V8 F/I	33-2434 ♦	HP-1017
Caprice	6.0L V8 F/I		HP-1017
Captiva	2.2L L4 DSL	33-2956	
Captiva Sport	2.4L L4 F/I	33-2956	HP-7000
Captiva Sport	3.0L V6 F/I	33-2404	HP-2011
Colorado	2.9L L4 F/I	33-2408 ♦	HP-1007
Colorado	3.7L L5 F/I	33-2408 ♦	HP-2006
Colorado	5.3L V8 F/I	33-2408	HP-1017
Corvette	6.2L V8 F/I	E-0782 ♦	HP-1017
Corvette Z06	7.0L V8 F/I	E-0782	HP-1017
Corvette ZR-1	6.2L V8 F/I	E-0786 ♦	HP-1017
Cruze	1.4L L4 F/I	33-2966 ♦	

*Indicates 2 filters required ♦ - Intake kit available - see page 80 Applications updated daily at knfilters.com

Vehicle	Engine Type	Air Filter	Oil Filter
2012 CHEVROLET			
Cruze	1.6L L4 F/I	33-2964	
Cruze	1.7L L4 DSL	33-2966	
Cruze	1.8L L4 F/I	33-2964 ♦	
Cruze	2.0L L4 DSL	33-2966	
Equinox	2.4L L4 F/I	33-2439 ♦	HP-7000
Equinox	3.0L V6 F/I	33-2439	HP-2011
Express 1500	4.3L V6 F/I	E-1986	HP-1001
Express 1500	5.3L V8 F/I	E-1986	HP-1017
Express 2500	4.8L V8 F/I	E-1986	HP-1017
Express 2500	6.0L V8 F/I	E-1986	HP-1017
Express 2500	6.6L V8 DSL		HP-3003
Express 3500	6.0L V8 F/I	E-1986	HP-1017
Express 3500	6.6L V8 DSL		HP-3003
Express 4500	6.0L V8 F/I		HP-1017
Impala	3.6L V6 F/I	33-2475	HP-2011
Malibu	2.4L L4 F/I	33-2296	HP-7000
Malibu	3.6L V6 F/I	33-2296	HP-1017
Orlando	1.8L L4 F/I	33-2964	
Orlando	2.0L L4 DSL	33-2966	
Orlando	2.4L L4 F/I		HP-7000
Silverado 1500	4.3L V6 F/I	33-2129	HP-1001
Silverado 1500	4.8L V8 F/I	33-2129 ♦	HP-1017
Silverado 1500	5.3L V8 F/I	33-2129 ♦	HP-1017
Silverado 1500	6.2L V8 F/I	33-2135 ♦	HP-1017
Silverado 1500 Hybrid	6.0L V8 F/I	33-2135	HP-1017
Silverado 2500 HD	6.0L V8 F/I	33-2135 ♦	HP-1017
Silverado 2500 HD	6.6L V8 DSL	33-2466 ♦	HP-3003
Silverado 3500 HD	6.0L V8 F/I	33-2135 ♦	HP-1017
Silverado 3500 HD	6.6L V8 DSL	33-2466 ♦	HP-3003
Sonic	1.4L L4 F/I	33-2476	
Sonic	1.8L L4 F/I	33-2476	
Spark	1.0L L4 F/I	33-3001	
Spark	1.2L L4 F/I	33-3001	
Suburban 1500	5.3L V8 F/I	33-2129 ♦	HP-1017
Suburban 2500	6.0L V8 F/I	33-2135	HP-1017
Tahoe	5.3L V8 F/I	33-2129 ♦	HP-1017
Tahoe Hybrid	6.0L V8 F/I	33-2135	HP-1017
Traverse	3.6L V6 F/I	33-2394	HP-2011
Volt	1.4L L4 F/I	33-2464	
2011 CHEVROLET			
Avalanche	5.3L V8 F/I	33-2129 ♦	HP-1017
Aveo	1.2L L4 F/I	33-2476	
Aveo	1.4L L4 F/I	33-2476	
Aveo	1.6L L4 F/I - Non-US	33-2476	
Aveo	1.6L L4 F/I - US	33-2320	
Aveo5	1.6L L4 F/I	33-2320	
Camaro	6.2L V8 F/I	33-2434 ♦	HP-1017
Caprice	6.0L V8 F/I		HP-1017
Captiva	2.2L L4 DSL	33-2956	
Captiva Sport	2.4L L4 F/I	33-2956	
Colorado	2.9L L4 F/I	33-2408 ♦	HP-1007
Colorado	3.7L L5 F/I	33-2408 ♦	HP-2006
Colorado	5.3L V8 F/I	33-2408	HP-1017
Corvette	6.2L V8 F/I	E-0782 ♦	HP-1017
Corvette Z06	7.0L V8 F/I	E-0782	HP-1017
Corvette ZR-1	6.2L V8 F/I	E-0786 ♦	HP-1017
Cruze	1.4L L4 F/I	33-2966 ♦	
Cruze	1.6L L4 F/I	33-2964	
Cruze	1.8L L4 F/I	33-2964 ♦	
Cruze	2.0L L4 DSL	33-2966	
Equinox	2.4L L4 F/I	33-2439 ♦	HP-7000
Equinox	3.0L V6 F/I	33-2439	HP-2011
Express 1500	4.3L V6 F/I	E-1986	HP-1001
Express 1500	5.3L V8 F/I	E-1986	HP-1017
Express 2500	4.8L V8 F/I	E-1986	HP-1017
Express 2500	6.0L V8 F/I	E-1986	HP-1017
Express 3500	4.8L V8 F/I	E-1986	HP-1017
Express 3500	6.0L V8 F/I	E-1986	HP-1017
Express 3500	6.6L V8 DSL		HP-3003
HHR	2.2L L4 F/I	33-2339 ♦	
HHR	2.4L L4 F/I	33-2339 ♦	
Impala	3.5L V6 F/I	33-2334	HP-2006
Impala	3.9L V6 F/I	33-2334	HP-2006
Malibu	2.4L L4 F/I	33-2296	
Malibu	3.6L V6 F/I	33-2296	HP-1017
Orlando	1.8L L4 F/I	33-2964	
Silverado 1500	4.3L V6 F/I	33-2129	HP-1001
Silverado 1500	4.8L V8 F/I	33-2129 ♦	HP-1017
Silverado 1500	5.3L V8 F/I	33-2129 ♦	HP-1017
Silverado 1500	6.2L V8 F/I	33-2135 ♦	HP-1017
Silverado 1500 Hybrid	6.0L V8 F/I	33-2135	HP-1017
Silverado 2500 HD	6.0L V8 F/I	33-2135 ♦	HP-1017
Silverado 2500 HD	6.6L V8 DSL	33-2466 ♦	HP-3003
Silverado 3500 HD	6.0L V8 F/I	33-2135 ♦	HP-1017
Silverado 3500 HD	6.6L V8 DSL	33-2466 ♦	HP-3003
Spark	1.0L L4 F/I	33-3001	
Spark	1.2L L4 F/I	33-3001	
Suburban 1500	5.3L V8 F/I	33-2129 ♦	HP-1017
Suburban 2500	6.0L V8 F/I	33-2135	HP-1017
Tahoe	5.3L V8 F/I	33-2129 ♦	HP-1017
Tahoe Hybrid	6.0L V8 F/I	33-2135	HP-1017
Traverse	3.6L V6 F/I	33-2394	HP-2011
Volt	1.4L L4 F/I	33-2464	
2010 CHEVROLET			
Avalanche	5.3L V8 F/I	33-2129 ♦	HP-1017
Aveo	1.2L L4 F/I	33-2320	
Aveo	1.4L L4 F/I	33-2320	
Aveo	1.6L L4 F/I	33-2320	
Aveo5	1.6L L4 F/I	33-2320	
Camaro	6.2L V8 F/I	33-2434 ♦	HP-1017
Captiva	2.0L L4 DSL	33-2956	
Captiva	3.2L V6 F/I	33-2956	
Captiva Sport	2.4L L4 F/I	33-2956	
Chevy	1.6L L4 F/I		HP-1001
Cobalt	2.0L L4 F/I	33-2311 ♦	HP-7000
Cobalt	2.2L L4 F/I	33-2311 ♦	HP-7000
Colorado	2.9L L4 F/I	33-2408 ♦	HP-1007
Colorado	3.7L L5 F/I	33-2408 ♦	HP-2006
Colorado	5.3L V8 F/I	33-2408	HP-1017
Corvette	6.2L V8 F/I	E-0782 ♦	HP-1017
Corvette Z06	7.0L V8 F/I	E-0782	HP-1017
Corvette ZR-1	6.2L V8 F/I	E-0786 ♦	HP-1017
Cruze	1.6L L4 F/I	33-2964	
Cruze	1.8L L4 F/I	33-2964	
Cruze	2.0L L4 DSL	33-2966	
Epica	2.0L L4 F/I	33-2253	
Equinox	2.4L L4 F/I	33-2439 ♦	HP-7000
Equinox	3.0L V6 F/I	33-2439	HP-1017
Express 1500	4.3L V6 F/I	E-1986	HP-1001
Express 1500	5.3L V8 F/I	E-1986	HP-1017
Express 2500	4.8L V8 F/I	E-1986	HP-1017
Express 2500	6.0L V8 F/I	E-1986	HP-1017
Express 3500	4.8L V8 F/I	E-1986	HP-1017
Express 3500	6.0L V8 F/I	E-1986	HP-1017
Express 3500	6.6L V8 DSL		HP-3003
HHR	2.0L L4 F/I	E-1989 ♦	HP-7000

*Indicates 2 filters required ♦ - Intake kit available - see page 80 Applications updated daily at knfilters.com

Vehicle	Engine Type	Air Filter	Oil Filter
2010 CHEVROLET			
HHR	2.2L L4 F/I	33-2339 ♦	HP-7000
HHR	2.4L L4 F/I	33-2339 ♦	HP-7000
Impala	3.5L V6 F/I	33-2334	HP-2006
Impala	3.9L V6 F/I	33-2334	HP-2006
Lacetti	1.6L L4 F/I	33-2330	
Malibu	2.4L L4 F/I	33-2296	HP-7000
Malibu	3.5L V6 F/I	33-2334	HP-2006
Malibu	3.6L V6 F/I	33-2296	HP-1017
Silverado 1500	4.3L V6 F/I	33-2129	HP-1001
Silverado 1500	4.8L V8 F/I	33-2129 ♦	HP-1017
Silverado 1500	5.3L V8 F/I	33-2129 ♦	HP-1017
Silverado 1500	6.2L V8 F/I	33-2135 ♦	HP-1017
Silverado 1500 Hybrid	6.0L V8 F/I	33-2135	HP-1017
Silverado 2500 HD	6.0L V8 F/I	33-2135 ♦	HP-1017
Silverado 2500 HD	6.6L V8 DSL	E-0781 ♦	HP-3003
Silverado 3500 HD	6.0L V8 F/I	33-2135	HP-1017
Silverado 3500 HD	6.6L V8 DSL	E-0781 ♦	HP-3003
Suburban 1500	5.3L V8 F/I	33-2129 ♦	HP-1017
Suburban 2500	6.0L V8 F/I	33-2135	HP-1017
Tahoe	5.3L V8 F/I	33-2129 ♦	HP-1017
Tahoe Hybrid	6.0L V8 F/I	33-2135	HP-1017
Traverse	3.6L V6 F/I	33-2394	HP-1017
2009 CHEVROLET			
Avalanche	5.3L V8 F/I	33-2129 ♦	HP-1017
Avalanche	6.0L V8 F/I	33-2135 ♦	HP-1017
Aveo	1.2L L4 F/I	33-2320	
Aveo	1.4L L4 F/I	33-2320	
Aveo	1.6L L4 F/I	33-2320	
Aveo5	1.6L L4 F/I	33-2320	
C4500 Kodiak	6.6L V8 DSL		HP-3003
C5500 Kodiak	6.6L V8 DSL		HP-3003
Captiva	2.0L L4 DSL	33-2956	
Captiva Sport	2.4L L4 F/I	33-2956	
Chevy	1.6L L4 F/I		HP-1001
Cheyenne 2500	5.3L V8 F/I		HP-1017
Cobalt	2.0L L4 F/I	33-2311 ♦	HP-7000
Cobalt	2.2L L4 F/I	33-2311 ♦	HP-7000
Colorado	2.9L L4 F/I	33-2408 ♦	HP-1007
Colorado	3.7L L5 F/I	33-2408 ♦	HP-2006
Colorado	5.3L V8 F/I	33-2408	HP-1017
Corvette	6.2L V8 F/I	E-0782 ♦	HP-1017
Corvette Z06	7.0L V8 F/I	E-0782 ♦	HP-1017
Corvette ZR-1	6.2L V8 F/I	E-0786 ♦	HP-1017
Cruze	1.6L L4 F/I	33-2964	
Cruze	1.8L L4 F/I	33-2964	
Cruze	2.0L L4 DSL	33-2966	
Equinox	3.4L V6 F/I	33-2296	HP-1001
Equinox	3.6L V6 F/I	33-2296	HP-1017
Express 1500	4.3L V6 F/I	E-1986	HP-1001
Express 1500	5.3L V8 F/I	E-1986	HP-1017
Express 2500	4.8L V8 F/I	E-1986	HP-1017
Express 2500	6.0L V8 F/I	E-1986	HP-1017
Express 2500	6.6L V8 DSL		HP-3003
Express 3500	6.0L V8 F/I	E-1986	HP-1017
Express 3500	6.6L V8 DSL		HP-3003
HHR	2.0L L4 F/I	E-1989 ♦	HP-7000
HHR	2.2L L4 F/I	33-2339	HP-7000
HHR	2.4L L4 F/I	33-2339 ♦	HP-7000
Impala	3.5L V6 F/I	33-2334	HP-2006
Impala	3.9L V6 F/I	33-2334	HP-2006
Impala	5.3L V8 F/I	33-2334 ♦	HP-1017
Malibu	2.4L L4 F/I	33-2296	HP-7000
Malibu	3.5L V6 F/I	33-2296	HP-2006

Vehicle	Engine Type	Air Filter	Oil Filter
2009 CHEVROLET			
Malibu	3.6L V6 F/I	33-2296	HP-1017
Silverado 1500	4.3L V6 F/I	33-2129	HP-1001
Silverado 1500	4.8L V8 F/I	33-2129 ♦	HP-1017
Silverado 1500	5.3L V8 F/I	33-2129 ♦	HP-1017
Silverado 1500	6.0L V8 F/I	33-2135 ♦	HP-1017
Silverado 1500	6.2L V8 F/I	33-2135 ♦	HP-1017
Silverado 1500 Hybrid	6.0L V8 F/I	33-2135	HP-1017
Silverado 2500 HD	6.0L V8 F/I	33-2135 ♦	HP-1017
Silverado 2500 HD	6.6L V8 DSL	E-0781 ♦	HP-3003
Silverado 3500 HD	6.0L V8 F/I	33-2135 ♦	HP-1017
Silverado 3500 HD	6.6L V8 DSL	E-0781 ♦	HP-3003
Suburban 1500	5.3L V8 F/I	33-2129 ♦	HP-1017
Suburban 1500	6.0L V8 F/I	33-2135 ♦	HP-1017
Suburban 2500	6.0L V8 F/I	33-2135	HP-1017
Tahoe	4.8L V8 F/I	33-2129 ♦	HP-1017
Tahoe	5.3L V8 F/I	33-2129 ♦	HP-1017
Tahoe	6.2L V8 F/I	33-2135 ♦	HP-1017
Tahoe Hybrid	6.0L V8 F/I	33-2135	HP-1017
TrailBlazer	4.2L L6 F/I	E-1009 ♦	HP-2006
TrailBlazer	5.3L V8 F/I	E-1009	
TrailBlazer	6.0L V8 F/I	E-1009	HP-1017
Traverse	3.6L V6 F/I	33-2394	HP-1017
Uplander	3.9L V6 F/I	33-2318	HP-2006
2008 CHEVROLET			
Avalanche	5.3L V8 F/I	33-2129 ♦	HP-1017
Avalanche	6.0L V8 F/I	33-2135 ♦	HP-1017
Aveo	1.2L L4 F/I	33-2320	
Aveo	1.4L L4 F/I	33-2320	
Aveo	1.6L L4 F/I	33-2320	HP-1001
Aveo5	1.6L L4 F/I		HP-1001
C4500 Kodiak	6.6L V8 DSL		HP-3003
C5500 Kodiak	6.6L V8 DSL		HP-3003
Captiva	2.0L L4 DSL	33-2956	
Captiva Sport	2.4L L4 F/I	33-2956	
Chevy	1.6L L4 F/I		HP-1001
Cheyenne 2500	5.3L V8 F/I		HP-1007
Cobalt	2.0L L4 F/I	33-2311 ♦	HP-7000
Cobalt	2.2L L4 F/I	33-2311 ♦	HP-7000
Cobalt	2.4L L4 F/I	33-2311 ♦	HP-7000
Colorado	2.9L L4 F/I	33-2408 ♦	HP-1007
Colorado	3.7L L5 F/I	33-2408 ♦	HP-2006
Corvette	6.2L V8 F/I	E-0782 ♦	HP-1017
Corvette Z06	7.0L V8 F/I	E-0782 ♦	HP-1017
Epica	2.5L L6 F/I	33-2253	
Equinox	3.4L V6 F/I	33-2296	HP-1001
Equinox	3.6L V6 F/I	33-2296	HP-1017
Express 1500	4.3L V6 F/I	E-1986	HP-1001
Express 1500	5.3L V8 F/I	E-1986	HP-1017
Express 2500	4.8L V8 F/I	E-1986	HP-1017
Express 2500	6.0L V8 F/I	E-1986	HP-1017
Express 2500	6.6L V8 DSL		HP-3003
Express 3500	6.0L V8 F/I	E-1986	HP-1017
Express 3500	6.6L V8 DSL		HP-3003
HHR	2.0L L4 F/I	E-1989 ♦	HP-7000
HHR	2.2L L4 F/I	33-2339	HP-7000
HHR	2.4L L4 F/I	33-2339 ♦	HP-7000
Impala	3.5L V6 F/I	33-2334	HP-2006
Impala	3.9L V6 F/I	33-2334	HP-2006
Impala	5.3L V8 F/I	33-2334 ♦	HP-1017
Malibu	2.2L L4 F/I		HP-7000
Malibu	2.4L L4 F/I	33-2296	HP-7000
Malibu	3.5L V6 F/I	33-2315	HP-2006
Malibu	3.6L V6 F/I	33-2296	HP-1017

*Indicates 2 filters required ♦ - Intake kit available - see page 80 Applications updated daily at knfilters.com

2008 CHEVROLET

Vehicle	Engine Type	Air Filter	Oil Filter
Meriva	1.8L L4 F/I		HP-1001
Silverado 1500	4.3L V6 F/I	33-2129	HP-1001
Silverado 1500	4.8L V8 F/I	33-2129 ♦	HP-1017
Silverado 1500	5.3L V8 F/I	33-2129 ♦	HP-1017
Silverado 1500	6.0L V8 F/I	33-2135 ♦	HP-1017
Silverado 2500 HD	6.0L V8 F/I	33-2135 ♦	HP-1017
Silverado 2500 HD	6.6L V8 DSL	E-0781 ♦	HP-3003
Silverado 3500 HD	6.0L V8 F/I	33-2135 ♦	HP-1017
Silverado 3500 HD	6.6L V8 DSL	E-0781 ♦	HP-3003
Suburban 1500	5.3L V8 F/I	33-2129 ♦	HP-1017
Suburban 1500	6.0L V8 F/I	33-2135 ♦	HP-1017
Suburban 2500	6.0L V8 F/I	33-2135	HP-1017
Tahoe	4.8L V8 F/I	33-2129 ♦	HP-1017
Tahoe	5.3L V8 F/I	33-2129 ♦	HP-1017
Tahoe Hybrid	6.0L V8 F/I	33-2135	HP-1017
TrailBlazer	4.2L L6 F/I	E-1009 ♦	HP-2006
TrailBlazer	5.3L V8 F/I	E-1009	HP-1017
TrailBlazer	6.0L V8 F/I	E-1009 ♦	HP-1017
Uplander	3.9L V6 F/I	33-2318	HP-2006

2007 CHEVROLET

Vehicle	Engine Type	Air Filter	Oil Filter
Avalanche	5.3L V8 F/I	33-2129 ♦	HP-1017
Avalanche	6.0L V8 F/I	33-2135 ♦	HP-1017
Aveo	1.2L L4 F/I	33-2320	
Aveo	1.4L L4 F/I	33-2320	
Aveo	1.6L L4 F/I	33-2320	HP-1001
Aveo5	1.6L L4 F/I		HP-1001
Blazer	4.3L V6 F/I	33-2042	
Blazer	4.3L V6 F/I - 2WD	33-2042	HP-1001
Blazer	4.3L V6 F/I - 4WD	33-2042	HP-2001
C4500 Kodiak	6.6L V8 DSL		HP-3003
C5500 Kodiak	6.6L V8 DSL		HP-3003
Camaro	3.8L V6 F/I	33-2118	HP-1001
Camaro	5.7L V8 F/I	33-2118	HP-1007
Captiva Sport	2.4L L4 F/I	33-2956	
Cheyenne 2500	5.3L V8 F/I		HP-1007
Cobalt	2.0L L4 F/I	E-0777	HP-7000
Cobalt	2.2L L4 F/I	33-2311 ♦	HP-7000
Cobalt	2.4L L4 F/I	33-2311 ♦	HP-7000
Colorado	2.9L L4 F/I	E-0773 ♦	HP-1007
Colorado	3.7L L5 F/I	E-0773 ♦	HP-2006
Corvette	6.0L V8 F/I	33-2305* ♦	HP-1017
Corvette Z06	7.0L V8 F/I	E-0782 ♦	HP-1017
Equinox	3.4L V6 F/I	33-2296	HP-1001
Evanda	2.0L L4 F/I	33-2253	
Express 1500	4.3L V6 F/I	E-1008	HP-1001
Express 1500	5.3L V8 F/I	E-1008	HP-1017
Express 2500	4.8L V8 F/I	E-1008	HP-1017
Express 2500	6.0L V8 F/I	E-1008	HP-1017
Express 2500	6.6L V8 DSL	E-0783	HP-3003
Express 3500	4.8L V8 F/I	E-1008	HP-1017
Express 3500	6.0L V8 F/I	E-1008	HP-1017
Express 3500	6.6L V8 DSL	E-0783	HP-3003
HHR	2.2L L4 F/I	33-2339	HP-7000
HHR	2.4L L4 F/I	33-2339 ♦	HP-7000
Impala	3.5L V6 F/I	33-2334	HP-2006
Impala	3.9L V6 F/I	33-2334	HP-2006
Impala	5.3L V8 F/I	33-2334 ♦	HP-1017
Malibu	2.2L L4 F/I	33-2310	HP-7000
Malibu	3.5L V6 F/I	33-2315	HP-2006
Malibu	3.9L V6 F/I	33-2315	HP-2006
Meriva	1.8L L4 F/I		HP-1001
Monte Carlo	3.5L V6 F/I	33-2334	HP-2006
Monte Carlo	5.3L V8 F/I	33-2334 ♦	HP-1017

2007 CHEVROLET

Vehicle	Engine Type	Air Filter	Oil Filter
Optra	2.0L L4 F/I		HP-1001
Silverado 1500	4.3L V6 F/I	33-2129	HP-1001
Silverado 1500	4.8L V8 F/I	33-2129 ♦	HP-1017
Silverado 1500	5.3L V8 F/I	33-2129 ♦	HP-1017
Silverado 1500	6.0L V8 F/I	33-2135 ♦	HP-1017
Silverado 1500 Classic	4.3L V6 F/I	33-2129 ♦	HP-1001
Silverado 1500 Classic	4.8L V8 F/I	33-2129 ♦	HP-1017
Silverado 1500 Classic	5.3L V8 F/I	33-2129 ♦	HP-1017
Silverado 1500 HD Classic	6.0L V8 F/I	33-2135 ♦	HP-1017
Silverado 2500 HD	6.0L V8 F/I	33-2135 ♦	HP-1017
Silverado 2500 HD	6.6L V8 DSL	E-0781 ♦	HP-3003
Silverado 2500 HD Classic	6.0L V8 F/I	33-2135 ♦	HP-1017
Silverado 2500 HD Classic	6.6L V8 DSL	E-0781 ♦	HP-3003
Silverado 2500 HD Classic	8.1L V8 F/I	33-2135 ♦	HP-1011
Silverado 3500 Classic	6.0L V8 F/I	33-2135 ♦	HP-1017
Silverado 3500 Classic	6.6L V8 DSL	E-0781 ♦	HP-3003
Silverado 3500 Classic	8.1L V8 F/I	33-2135 ♦	HP-1011
Silverado 3500 HD	6.0L V8 F/I	33-2135 ♦	HP-1017
Silverado 3500 HD	6.6L V8 DSL	E-0781 ♦	HP-3003
Silverado SS	6.0L V8 F/I	33-2135	HP-1017
Silverado SS Classic	6.0L V8 F/I	33-2135 ♦	HP-1017
SSR	6.0L V8 F/I	33-2322	HP-1017
Suburban 1500	5.3L V8 F/I	33-2129 ♦	HP-1017
Suburban 1500	6.0L V8 F/I	33-2135 ♦	HP-1017
Suburban 2500	6.0L V8 F/I	33-2135 ♦	HP-1017
Tahoe	4.8L V8 F/I	33-2129 ♦	HP-1017
Tahoe	5.3L V8 F/I	33-2129 ♦	HP-1017
Tavera	2.5L L4 DSL	E-2298	
TrailBlazer	4.2L L6 F/I	E-1009 ♦	HP-2006
TrailBlazer	5.3L V8 F/I	E-1009	HP-1017
TrailBlazer	6.0L V8 F/I	E-1009 ♦	HP-1017
Uplander	3.9L V6 F/I	33-2318	HP-2006

2006 CHEVROLET

Vehicle	Engine Type	Air Filter	Oil Filter
Astra	1.8L L4 F/I		HP-1001
Avalanche 1500	5.3L V8 F/I	33-2129 ♦	HP-1007
Avalanche 2500	8.1L V8 F/I	33-2135 ♦	HP-1011
Aveo	1.2L L4 F/I	33-2320	
Aveo	1.4L L4 F/I	33-2320	
Aveo	1.6L L4 F/I	33-2320	HP-1001
Aveo5	1.6L L4 F/I		HP-1001
Blazer	4.3L V6 F/I	33-2042	
Blazer	4.3L V6 F/I - 2WD	33-2042	HP-1001
Blazer	4.3L V6 F/I - 4WD	33-2042	HP-2001
C2	1.6L L4 F/I		HP-1001
Camaro	3.8L V6 F/I	33-2118	HP-1001
Camaro	5.7L V8 F/I	33-2118	HP-1007
Captiva Sport	2.4L L4 F/I	33-2956	
Cheyenne	5.3L V8 F/I		HP-1007
Cobalt	2.0L L4 F/I	E-0777 ♦	HP-7000
Cobalt	2.2L L4 F/I	33-2311 ♦	HP-7000
Cobalt	2.4L L4 F/I	33-2311 ♦	HP-7000
Colorado	2.8L L4 F/I	E-0773 ♦	HP-1007
Colorado	3.5L L5 F/I	E-0773 ♦	HP-2006
Corsa	1.8L L4 F/I - SOHC		HP-1001
Corvette	6.0L V8 F/I	33-2305* ♦	HP-1007
Corvette Z06	7.0L V8 F/I	E-0782 ♦	HP-1017

*Indicates 2 filters required ♦ - Intake kit available - see page 80 Applications updated daily at knfilters.com

2006 CHEVROLET

Vehicle	Engine Type	Air Filter	Oil Filter
Equinox	3.4L V6 F/I	33-2296	HP-1001
Evanda	2.0L L4 F/I	33-2253	
Express 1500	4.3L V6 F/I	E-1008	HP-1001
Express 1500	5.3L V8 F/I	E-1008	HP-1007
Express 2500	4.8L V8 F/I	E-1008	HP-1007
Express 2500	6.0L V8 F/I	E-1008	HP-1007
Express 2500	6.6L V8 DSL	E-0783	HP-3003
Express 3500	4.8L V8 F/I	E-1008	HP-1007
Express 3500	6.0L V8 F/I	E-1008	HP-1007
Express 3500	6.6L V8 DSL	E-0783	HP-3003
HHR	2.2L L4 F/I	33-2339	HP-7000
HHR	2.4L L4 F/I	33-2339 ♦	HP-7000
Impala	3.5L V6 F/I	33-2334	HP-2006
Impala	3.9L V6 F/I	33-2334	HP-2006
Impala	5.3L V8 F/I	33-2334 ♦	HP-1007
Kodiak CK4500	6.6L V8 DSL		HP-3003
Kodiak CK5500	6.6L V8 DSL		HP-3003
Lacetti	1.8L L4 F/I	33-2330	
Malibu	2.2L L4 F/I	33-2310	HP-7000
Malibu	3.5L V6 F/I	33-2310	HP-1001
Malibu	3.9L V6 F/I	33-2315	HP-2006
Meriva	1.8L L4 F/I		HP-1001
Monte Carlo	3.5L V6 F/I	33-2334	HP-2006
Monte Carlo	3.9L V6 F/I	33-2334	HP-2006
Monte Carlo	5.3L V8 F/I	33-2334 ♦	HP-1007
Optra	2.0L L4 F/I		HP-1001
Silverado 1500	4.3L V6 F/I	33-2129 ♦	HP-1001
Silverado 1500	4.8L V8 F/I	33-2129 ♦	HP-1007
Silverado 1500	5.3L V8 F/I	33-2129 ♦	HP-1007
Silverado 1500	6.0L V8 F/I	33-2135 ♦	HP-1007
Silverado 1500 HD	6.0L V8 F/I	33-2135 ♦	HP-1007
Silverado 2500 HD	6.0L V8 F/I	33-2135 ♦	HP-1007
Silverado 2500 HD	6.6L V8 DSL	E-0781 ♦	HP-3003
Silverado 2500 HD	8.1L V8 F/I	33-2135 ♦	HP-1011
Silverado 3500	6.0L V8 F/I	33-2135 ♦	HP-1007
Silverado 3500	6.6L V8 DSL	E-0781 ♦	HP-3003
Silverado 3500	8.1L V8 F/I	33-2135 ♦	HP-1011
Silverado SS	6.0L V8 F/I	33-2135 ♦	HP-1007
SSR	6.0L V8 F/I	33-2322 ♦	HP-1007
Suburban 1500	5.3L V8 F/I	33-2129 ♦	HP-1007
Suburban 1500	6.0L V8 F/I	33-2135 ♦	HP-1007
Suburban 2500	6.0L V8 F/I	33-2135 ♦	HP-1007
Suburban 2500	8.1L V8 F/I	33-2135 ♦	HP-1011
Tahoe	4.8L V8 F/I	33-2129 ♦	HP-1007
Tahoe	5.3L V8 F/I	33-2129 ♦	HP-1007
Tracker	2.0L L4 F/I		HP-1003
TrailBlazer	4.2L L6 F/I	E-1009 ♦	HP-2006
TrailBlazer	5.3L V8 F/I	E-1009	HP-1007
TrailBlazer	6.0L V8 F/I	E-1009 ♦	HP-1007
Uplander	3.5L V6 F/I	33-2318	HP-1001
Uplander	3.9L V6 F/I	33-2318	HP-2006

2005 CHEVROLET

Vehicle	Engine Type	Air Filter	Oil Filter
Astro	4.3L V6 F/I	33-2225	HP-1001
Avalanche 1500	5.3L V8 F/I	33-2129 ♦	HP-1007
Avalanche 2500	8.1L V8 F/I	33-2135 ♦	HP-1011
Aveo	1.6L L4 F/I	33-2320	HP-1001
Blazer	4.3L V6 F/I	33-2042 ♦	
Blazer	4.3L V6 F/I - 2WD	33-2042	HP-1001
Blazer	4.3L V6 F/I - 4WD	33-2042	HP-2001
Camaro	3.8L V6 F/I	33-2118	HP-1001
Camaro	5.7L V8 F/I	33-2118	HP-1007
Cavalier Ecotec	2.2L L4 F/I	33-2143 ♦	HP-7000
Cheyenne	5.3L V8 F/I		HP-1007

2005 CHEVROLET

Vehicle	Engine Type	Air Filter	Oil Filter
Classic	2.2L L4 F/I		HP-7000
Cobalt	2.0L L4 F/I	E-0777 ♦	HP-7000
Cobalt	2.2L L4 F/I	33-2311 ♦	HP-7000
Cobalt	2.4L L4 F/I	33-2311	
Colorado	2.8L L4 F/I	E-0773 ♦	HP-1007
Colorado	3.5L L5 F/I	E-0773 ♦	HP-2006
Corsa	1.8L L4 F/I - SOHC		HP-1001
Corvette	6.0L V8 F/I	33-2305* ♦	HP-1007
Equinox	3.4L V6 F/I	33-2296	HP-1001
Evanda	2.0L L4 F/I	33-2253	
Express 1500	4.3L V6 F/I	E-1008	HP-1001
Express 1500	5.3L V8 F/I	E-1008	HP-1007
Express 2500	4.8L V8 F/I	E-1008	HP-1007
Express 2500	5.3L V8 F/I	E-1008	HP-1007
Express 2500	6.0L V8 F/I	E-1008	HP-1007
Express 3500	4.8L V8 F/I	E-1008	HP-1007
Express 3500	6.0L V8 F/I	E-1008	HP-1007
Impala	3.4L V6 F/I	33-2141-1	HP-1001
Impala	3.8L V6 F/I	33-2141-1 ♦	HP-1001
Kodiak CK4500	6.6L V8 DSL		HP-3003
Kodiak CK5500	6.6L V8 DSL		HP-3003
Luv	2.2L L4 F/I		HP-1004
Malibu	2.2L L4 F/I		HP-7000
Malibu	2.2L L4 F/I - Body Code N	33-2121-1	HP-7000
Malibu	2.2L L4 F/I - Body Code Z	33-2310	HP-7000
Malibu	3.5L V6 F/I	33-2310	HP-1001
Monte Carlo	3.4L V6 F/I	33-2141-1	HP-1001
Monte Carlo	3.8L V6 F/I	33-2141-1 ♦	HP-1001
Optra	2.0L L4 F/I		HP-1001
Silverado 1500	4.3L V6 F/I	33-2129 ♦	HP-1001
Silverado 1500	4.8L V8 F/I	33-2129 ♦	HP-1007
Silverado 1500	5.3L V8 F/I	33-2129 ♦	HP-1007
Silverado 1500 HD	6.0L V8 F/I	33-2135 ♦	HP-1007
Silverado 2500 HD	6.0L V8 F/I	33-2135 ♦	HP-1007
Silverado 2500 HD	6.6L V8 DSL		HP-3003
Silverado 2500 HD	6.6L V8 DSL - w/Panel Filter	33-2135 ♦	HP-3003
Silverado 2500 HD	6.6L V8 DSL - w/Round Filter	E-0781 ♦	HP-3003
Silverado 2500 HD	8.1L V8 F/I	33-2135 ♦	HP-1011
Silverado 3500	6.0L V8 F/I	33-2135 ♦	HP-1007
Silverado 3500	6.6L V8 DSL		HP-3003
Silverado 3500	6.6L V8 DSL - w/Panel Filter	33-2135 ♦	HP-3003
Silverado 3500	6.6L V8 DSL - w/Round Filter	E-0781 ♦	HP-3003
Silverado 3500	8.1L V8 F/I	33-2135 ♦	HP-1011
Silverado SS	6.0L V8 F/I	33-2135 ♦	HP-1007
SSR	6.0L V8 F/I	33-2322 ♦	HP-1007
Suburban 1500	5.3L V8 F/I	33-2129 ♦	HP-1007
Suburban 2500	6.0L V8 F/I	33-2135 ♦	HP-1007
Suburban 2500	8.1L V8 F/I	33-2135 ♦	HP-1011
Tahoe	4.8L V8 F/I	33-2129 ♦	HP-1007
Tahoe	5.3L V8 F/I	33-2129 ♦	HP-1007
Tavera	2.5L L4 DSL	E-2298	
Tracker	2.0L L4 F/I		HP-1003
TrailBlazer	4.2L L6 F/I	E-1009 ♦	HP-2006
TrailBlazer	5.3L V8 F/I	E-1009 ♦	HP-1007
Uplander	3.5L V6 F/I	33-2318	HP-1001
Venture	3.4L V6 F/I	33-2156	HP-1001

2004 CHEVROLET

Vehicle	Engine Type	Air Filter	Oil Filter
Astro	4.3L V6 F/I	33-2225	HP-1001
Avalanche 1500	5.3L V8 F/I	33-2129 ♦	HP-1007
Avalanche 2500	8.1L V8 F/I	33-2135 ♦	HP-1011

*Indicates 2 filters required ♦ - Intake kit available - see page 80 Applications updated daily at knfilters.com

2004 CHEVROLET

Vehicle	Engine Type	Air Filter	Oil Filter
Aveo	1.6L L4 F/I	33-2320	HP-1001
Blazer	4.3L V6 F/I	33-2042 ♦	
Blazer	4.3L V6 F/I - 2WD	33-2042	HP-1001
Blazer	4.3L V6 F/I - 4WD	33-2042	HP-2001
Camaro	3.8L V6 F/I	33-2118	HP-1001
Camaro	5.7L V8 F/I	33-2118	HP-1007
Cavalier	2.2L L4 F/I	33-2143	HP-7000
Cavalier Ecotec	2.2L L4 F/I	33-2143 ♦	HP-7000
Cheyenne	5.3L V8 F/I		HP-1007
Classic	2.2L L4 F/I		HP-7000
Colorado	2.8L L4 F/I	E-0773 ♦	HP-1007
Colorado	3.5L L5 F/I	E-0773 ♦	HP-2006
Corsa	1.8L L4 F/I - SOHC		HP-1001
Corvette	5.7L V8 F/I	33-2111 ♦	HP-1007
Corvette Z06	5.7L V8 F/I	33-2111 ♦	HP-1007
Evanda	2.0L L4 F/I	33-2253	
Express 1500	4.3L V6 F/I	E-1008	HP-1001
Express 1500	5.3L V8 F/I	E-1008	HP-1007
Express 2500	4.8L V8 F/I	E-1008	HP-1007
Express 2500	5.3L V8 F/I	E-1008	HP-1007
Express 2500	6.0L V8 F/I	E-1008	HP-1007
Express 3500	6.0L V8 F/I	E-1008	HP-1007
Impala	3.4L V6 F/I	33-2141-1	HP-1001
Impala	3.8L V6 F/I	33-2141-1 ♦	HP-1001
Kodiak CK4500	6.6L V8 DSL		HP-3003
Kodiak CK5500	6.6L V8 DSL		HP-3003
Malibu	2.2L L4 F/I	33-2121-1	HP-7000
Malibu	3.5L V6 F/I	33-2310	HP-1001
Meriva	1.8L L4 F/I		HP-1001
Monte Carlo	3.4L V6 F/I	33-2141-1	HP-1001
Monte Carlo	3.8L V6 F/I	33-2141-1 ♦	HP-1001
Optra	1.6L L4 F/I	33-2330	
Optra	1.8L L4 F/I	33-2330	
Optra	2.0L L4 F/I		HP-1001
S10 Pickup	4.3L V6 F/I	33-2042 ♦	HP-1001
Silverado 1500	4.3L V6 F/I	33-2129 ♦	HP-1001
Silverado 1500	4.8L V8 F/I	33-2129 ♦	HP-1007
Silverado 1500	5.3L V8 F/I	33-2129 ♦	HP-1007
Silverado 2500	6.0L V8 F/I	33-2135 ♦	HP-1007
Silverado 2500 HD	6.0L V8 F/I	33-2135 ♦	HP-1007
Silverado 2500 HD	6.6L V8 DSL	33-2135 ♦	HP-3003
Silverado 2500 HD	8.1L V8 F/I	33-2135 ♦	HP-1011
Silverado 3500	6.0L V8 F/I	33-2135 ♦	HP-1007
Silverado 3500	6.6L V8 DSL	33-2135 ♦	HP-3003
Silverado 3500	6.6L V8 DSL - LB7	33-2135	HP-3003
Silverado 3500	8.1L V8 F/I	33-2135 ♦	HP-1011
Silverado SS	6.0L V8 F/I	33-2135 ♦	HP-1007
SSR	5.3L V8 F/I	33-2322 ♦	HP-1007
Suburban 1500	5.3L V8 F/I	33-2129 ♦	HP-1007
Suburban 2500	6.0L V8 F/I	33-2135 ♦	HP-1007
Suburban 2500	8.1L V8 F/I	33-2135 ♦	HP-1011
Tahoe	4.8L V8 F/I	33-2129 ♦	HP-1007
Tahoe	5.3L V8 F/I	33-2129 ♦	HP-1007
Tavera	2.5L L4 DSL	E-2298	
Tracker	2.0L L4 F/I		HP-1003
Tracker	2.5L V6 F/I	33-2155	HP-1002
TrailBlazer	4.2L L6 F/I	E-1009 ♦	HP-2006
TrailBlazer	5.3L V8 F/I	E-1009 ♦	HP-1007
Venture	3.4L V6 F/I	33-2156	HP-1001

2003 CHEVROLET

Vehicle	Engine Type	Air Filter	Oil Filter
Astro	4.3L V6 F/I	33-2225	HP-1001
Avalanche 1500	5.3L V8 F/I	33-2129 ♦	HP-1007
Avalanche 2500	8.1L V8 F/I	33-2135 ♦	HP-1011

2003 CHEVROLET

Vehicle	Engine Type	Air Filter	Oil Filter
Blazer	3.0L V6 F/I - China	E-2017	
Blazer	4.3L V6 F/I	33-2042 ♦	
Blazer	4.3L V6 F/I - 2WD	33-2042	HP-1001
Blazer	4.3L V6 F/I - 4WD	33-2042	HP-2001
Camaro	3.8L V6 F/I	33-2118	HP-1001
Camaro	5.7L V8 F/I	33-2118	HP-1007
Cavalier	2.2L L4 F/I	33-2143	HP-7000
		33-2143 ♦	HP-7000
Cavalier Ecotec	2.2L L4 F/I	33-2143 ♦	HP-7000
Cheyenne	5.3L V8 F/I		HP-1007
Corsa	1.8L L4 F/I - SOHC		HP-1001
Corvette	5.7L V8 F/I	33-2111 ♦	HP-1007
Corvette Z06	5.7L V8 F/I	33-2111 ♦	HP-1007
Evanda	2.0L L4 F/I	33-2253	
Express 1500	4.3L V6 F/I	E-1008	HP-1001
Express 1500	5.3L V8 F/I	E-1008	HP-1007
Express 2500	4.8L V8 F/I	E-1008	HP-1007
Express 2500	5.3L V8 F/I	E-1008	HP-1007
Express 2500	6.0L V8 F/I	E-1008	HP-1007
Express 3500	6.0L V8 F/I	E-1008	HP-1007
Impala	3.4L V6 F/I	33-2141-1	HP-1001
Impala	3.8L V6 F/I	33-2141-1 ♦	HP-1001
Joy	1.4L L4 F/I		HP-1001
Kodiak CK4500	6.6L V8 DSL		HP-3003
Luv	2.2L L4 F/I		HP-1004
Malibu	3.1L V6 F/I	33-2121-1	HP-1001
Metro	1.3L L4 F/I	E-9132	
Monte Carlo	3.4L V6 F/I	33-2141-1	HP-1001
Monte Carlo	3.8L V6 F/I	33-2141-1 ♦	HP-1001
Monza	1.4L L4 F/I		HP-1001
Pop	1.4L L4 F/I		HP-1001
S10 Pickup	2.2L L4 F/I	33-2042 ♦	HP-1001
S10 Pickup	4.3L V6 F/I	33-2042 ♦	
S10 Pickup	4.3L V6 F/I - 2WD	33-2042	HP-1001
S10 Pickup	4.3L V6 F/I - 4WD	33-2042	HP-2001
Silverado 1500	4.3L V6 F/I	33-2129 ♦	HP-1001
Silverado 1500	4.8L V8 F/I	33-2129 ♦	HP-1007
Silverado 1500	5.3L V8 F/I	33-2129 ♦	HP-1007
Silverado 1500 HD	6.0L V8 F/I	33-2135 ♦	HP-1007
Silverado 2500	6.0L V8 F/I	33-2135 ♦	HP-1007
Silverado 2500 HD	6.0L V8 F/I	33-2135 ♦	HP-1007
Silverado 2500 HD	6.6L V8 DSL	33-2135 ♦	HP-3003
Silverado 2500 HD	8.1L V8 F/I	33-2135 ♦	HP-1011
Silverado 3500	6.0L V8 F/I	33-2135 ♦	HP-1007
Silverado 3500	6.6L V8 DSL	33-2135 ♦	HP-3003
Silverado 3500	8.1L V8 F/I	33-2135 ♦	HP-1011
Silverado SS	6.0L V8 F/I	33-2135 ♦	HP-1007
SSR	5.3L V8 F/I		HP-1007
Suburban 1500	5.3L V8 F/I	33-2129 ♦	HP-1007
Suburban 2500	6.0L V8 F/I	33-2135 ♦	HP-1007
Suburban 2500	8.1L V8 F/I	33-2135 ♦	HP-1011
Tahoe	4.8L V8 F/I	33-2129 ♦	HP-1007
Tahoe	5.3L V8 F/I	33-2129 ♦	HP-1007
Tracker	2.0L L4 F/I	33-2155	HP-1003
Tracker	2.5L V6 F/I	33-2155	HP-1002
TrailBlazer	4.2L L6 F/I	E-1009 ♦	HP-2006
TrailBlazer	5.3L V8 F/I	E-1009 ♦	HP-1007
Venture	3.4L V6 F/I	33-2156	HP-1001

2002 CHEVROLET

Vehicle	Engine Type	Air Filter	Oil Filter
Astro	4.3L V6 F/I	33-2225	HP-1001
Avalanche 1500	5.3L V8 F/I	33-2129 ♦	HP-2006
Avalanche 2500	8.1L V8 F/I	33-2135 ♦	HP-1011
Blazer	4.3L V6 F/I	33-2042 ♦	

2002 CHEVROLET

Vehicle	Engine Type	Air Filter	Oil Filter
Blazer	4.3L V6 F/I - 2WD	33-2042	HP-1001
Blazer	4.3L V6 F/I - 4WD	33-2042	HP-2001
C3500	8.1L V8 F/I	33-2135	HP-1011
Camaro	3.8L V6 F/I	33-2118 ♦	HP-1001
Camaro	5.7L V8 F/I	33-2118 ♦	HP-1007
Cavalier	2.2L L4 F/I	33-2143	HP-1001
Cavalier	2.4L L4 F/I	33-2143	HP-1007
Cavalier Ecotec	2.2L L4 F/I	33-2143 ♦	HP-7000
Cheyenne	5.3L V8 F/I		HP-1007
Corvette	5.7L V8 F/I	33-2111 ♦	HP-1007
Corvette Z06	5.7L V8 F/I	33-2111 ♦	HP-1007
Evanda	2.0L L4 F/I	33-2253	
Express 1500	4.3L V6 F/I	E-1008	HP-1001
Express 1500	5.0L V8 F/I	E-1008	HP-3002
Express 1500	5.7L V8 F/I	E-1008	HP-3002
Express 2500	5.0L V8 F/I	E-1008	HP-3002
Express 2500	5.7L V8 F/I	E-1008	HP-3002
Express 2500	6.5L V8 DSL	33-2111	HP-3002
Express 3500	5.7L V8 F/I	E-1008	HP-3002
Express 3500	6.5L V8 DSL	33-2111	HP-3002
Express 3500	8.1L V8 F/I	E-1008	HP-1011
Impala	3.4L V6 F/I	33-2141-1	HP-1001
Impala	3.8L V6 F/I	33-2141-1 ♦	HP-1001
Malibu	3.1L V6 F/I	33-2121-1	HP-1001
Monte Carlo	3.4L V6 F/I	33-2141-1	HP-1001
Monte Carlo	3.8L V6 F/I	33-2141-1 ♦	HP-1001
Prizm	1.8L L4 F/I		HP-1003
S10 Pickup	2.2L L4 F/I	33-2042 ♦	HP-1001
S10 Pickup	4.3L V6 F/I	33-2042 ♦	
S10 Pickup	4.3L V6 F/I - 2WD	33-2042	HP-1001
S10 Pickup	4.3L V6 F/I - 4WD	33-2042	HP-2001
Silverado 1500	4.3L V6 F/I	33-2129 ♦	HP-1001
Silverado 1500	4.8L V8 F/I	33-2129 ♦	HP-2006
Silverado 1500	5.3L V8 F/I	33-2129 ♦	HP-2006
Silverado 1500 HD	6.0L V8 F/I	33-2135 ♦	HP-2006
Silverado 2500	6.0L V8 F/I	33-2135 ♦	HP-2006
Silverado 2500 HD	6.0L V8 F/I	33-2135 ♦	HP-2006
Silverado 2500 HD	6.6L V8 DSL	33-2135 ♦	HP-3003
Silverado 2500 HD	8.1L V8 F/I	33-2135 ♦	HP-1011
Silverado 3500	6.0L V8 F/I	33-2135 ♦	HP-2006
Silverado 3500	6.6L V8 DSL	33-2135 ♦	HP-3003
Silverado 3500	8.1L V8 F/I	33-2135 ♦	HP-1011
Suburban 1500	5.3L V8 F/I	33-2129 ♦	HP-2006
Suburban 2500	6.0L V8 F/I	33-2135 ♦	HP-2006
Suburban 2500	8.1L V8 F/I	33-2135 ♦	HP-1011
Tahoe	4.8L V8 F/I	33-2129 ♦	HP-2006
Tahoe	5.3L V8 F/I	33-2129 ♦	HP-2006
Tracker	1.6L L4 F/I		HP-1003
Tracker	2.0L L4 F/I	33-2155	HP-1003
Tracker	2.5L V6 F/I	33-2155	HP-1002
TrailBlazer	4.2L L6 F/I	E-1009 ♦	HP-2006
Venture	3.4L V6 F/I	33-2156	HP-1001

2001 CHEVROLET

Vehicle	Engine Type	Air Filter	Oil Filter
Astro	4.3L V6 F/I	33-2225	HP-1001
Avalanche 2500	8.1L V8 F/I	33-2135	HP-1011
Blazer	4.3L V6 F/I	33-2042 ♦	
Blazer	4.3L V6 F/I - 2WD	33-2042	HP-1001
Blazer	4.3L V6 F/I - 4WD	33-2042	HP-2001
C3500	8.1L V8 F/I	33-2135	HP-1011
Camaro	3.8L V6 F/I	33-2118 ♦	HP-1001
Camaro	5.7L V8 F/I	33-2118 ♦	HP-1007
Cavalier	2.2L L4 F/I	33-2143	HP-1001
Cavalier	2.4L L4 F/I	33-2143	HP-1007

2001 CHEVROLET

Vehicle	Engine Type	Air Filter	Oil Filter
Cheyenne	5.7L V8 F/I		HP-3002
Corvette	5.7L V8 F/I	33-2111 ♦	HP-1007
Corvette Z06	5.7L V8 F/I	33-2111 ♦	HP-1007
Express 1500	4.3L V6 F/I	E-1008	HP-1001
Express 1500	5.0L V8 F/I	E-1008	HP-3002
Express 1500	5.7L V8 F/I	E-1008	HP-3002
Express 2500	4.3L V6 F/I	E-1008	HP-1001
Express 2500	5.0L V8 F/I	E-1008	HP-3002
Express 2500	5.7L V8 F/I	E-1008	HP-3002
Express 2500	6.5L V8 DSL	33-2111	HP-3002
Express 3500	5.7L V8 F/I	E-1008	HP-3002
Express 3500	6.5L V8 DSL	33-2111	HP-3002
Express 3500	8.1L V8 F/I	E-1008	HP-1011
Impala	3.4L V6 F/I	33-2141-1	HP-1001
Impala	3.8L V6 F/I	33-2141-1 ♦	HP-1001
Lumina	3.1L V6 F/I	33-2063-1	HP-1001
Malibu	3.1L V6 F/I	33-2121-1	HP-1001
Metro	1.3L L4 F/I	E-9132	HP-1002
Monte Carlo	3.4L V6 F/I	33-2141-1	HP-1001
Monte Carlo	3.8L V6 F/I	33-2141-1 ♦	HP-1001
Prizm	1.8L L4 F/I		HP-1003
S10 Pickup	2.2L L4 F/I	33-2042 ♦	HP-1001
S10 Pickup	4.3L V6 F/I	33-2042 ♦	
S10 Pickup	4.3L V6 F/I - 2WD	33-2042	HP-1001
S10 Pickup	4.3L V6 F/I - 4WD	33-2042	HP-2001
Silverado 1500	4.3L V6 F/I	33-2129 ♦	HP-1001
Silverado 1500	4.8L V8 F/I	33-2129 ♦	HP-2006
Silverado 1500	5.3L V8 F/I	33-2129 ♦	HP-2006
Silverado 1500 HD	6.0L V8 F/I	33-2135 ♦	HP-2006
Silverado 2500	6.0L V8 F/I	33-2135 ♦	HP-2006
Silverado 2500 HD	6.0L V8 F/I	33-2135 ♦	HP-2006
Silverado 2500 HD	6.6L V8 DSL	33-2135 ♦	HP-3003
Silverado 2500 HD	8.1L V8 F/I	33-2135 ♦	HP-1011
Silverado 3500	6.0L V8 F/I	33-2135 ♦	HP-2006
Silverado 3500	6.6L V8 DSL	33-2135 ♦	HP-3003
Silverado 3500	8.1L V8 F/I	33-2135 ♦	HP-1011
Suburban 1500	5.3L V8 F/I	33-2129 ♦	HP-2006
Suburban 2500	6.0L V8 F/I	33-2135 ♦	HP-2006
Suburban 2500	8.1L V8 F/I	33-2135 ♦	HP-1011
Tahoe	4.8L V8 F/I	33-2129 ♦	HP-2006
Tahoe	5.3L V8 F/I	33-2129 ♦	HP-2006
Tracker	1.6L L4 F/I	33-2155	HP-1003
Tracker	2.0L L4 F/I	33-2155	HP-1003
Tracker	2.5L V6 F/I	33-2155	HP-1002
Venture	3.4L V6 F/I	33-2156	HP-1001

2000 CHEVROLET

Vehicle	Engine Type	Air Filter	Oil Filter
Astro	4.3L V6 F/I	33-2225	HP-1001
Avalanche 2500	8.1L V8 F/I	33-2135	HP-1011
Blazer	2.4L L4 F/I	E-2016	
Blazer	4.3L V6 F/I	33-2042 ♦	
Blazer	4.3L V6 F/I - 2WD	33-2042	HP-1001
Blazer	4.3L V6 F/I - 4WD	33-2042	HP-2001
C2500	5.7L V8 F/I	E-1796 ♦	HP-3002
C2500	6.5L V8 DSL	E-1796	HP-3002
C2500	7.4L V8 F/I	E-1796 ♦	HP-3002
C3500	5.7L V8 F/I	E-1796 ♦	HP-3002
C3500	6.5L V8 DSL	E-1796	HP-3002
C3500	7.4L V8 F/I	E-1796 ♦	HP-3002
Camaro	3.8L V6 F/I	33-2118 ♦	HP-1001
Camaro	5.7L V8 F/I	33-2118 ♦	HP-1007
Cavalier	2.2L L4 F/I	33-2143	HP-1001
Cavalier	2.4L L4 F/I	33-2143	HP-1007
Cheyenne	5.7L V8 F/I		HP-3002

*Indicates 2 filters required ♦ - Intake kit available - see page 80 Applications updated daily at knfilters.com

2000 CHEVROLET

Vehicle	Engine Type	Air Filter	Oil Filter
Corvette	5.7L V8 F/I	33-2111 ♦	HP-1007
Express 1500	4.3L V6 F/I	33-2111	HP-1001
Express 1500	5.0L V8 F/I	33-2111	HP-3002
Express 1500	5.7L V8 F/I	33-2111	HP-3002
Express 2500	5.7L V8 F/I	33-2111	HP-3002
Express 3500	5.7L V8 F/I	33-2111	HP-3002
Express 3500	7.4L V8 F/I	33-2111	
Express 3500	7.4L V8 F/I - Long Filter	33-2111	HP-3002
Express 3500	7.4L V8 F/I - short filter	33-2111	HP-1011
Impala	3.4L V6 F/I	33-2141-1	HP-1001
Impala	3.8L V6 F/I	33-2141-1 ♦	HP-1001
K2500	5.7L V8 F/I	E-1796 ♦	HP-2001
K2500	6.5L V8 DSL	E-1796	HP-3002
K2500	7.4L V8 F/I	E-1796 ♦	HP-1011
K3500	5.7L V8 F/I	E-1796 ♦	HP-2001
K3500	6.5L V8 DSL	E-1796	HP-3002
K3500	7.4L V8 F/I	E-1796 ♦	HP-1011
Lumina	3.1L V6 F/I	33-2063-1	HP-1001
Malibu	3.1L V6 F/I	33-2121-1	HP-1001
Metro	1.0L L3 F/I	E-9209	HP-1002
Metro	1.3L L4 F/I	E-9132	HP-1002
Monte Carlo	3.4L V6 F/I	33-2141-1	HP-1001
Monte Carlo	3.8L V6 F/I	33-2141-1 ♦	HP-1001
Prizm	1.8L L4 F/I		HP-1003
S10 Pickup	2.2L L4 F/I	33-2042 ♦	HP-1001
S10 Pickup	4.3L V6 F/I	33-2042 ♦	
S10 Pickup	4.3L V6 F/I - 2WD	33-2042	HP-1001
S10 Pickup	4.3L V6 F/I - 4WD	33-2042	HP-2001
Silverado 1500	4.3L V6 F/I	33-2129 ♦	HP-2001
Silverado 1500	4.8L V8 F/I	33-2129 ♦	HP-2006
Silverado 1500	5.3L V8 F/I	33-2129 ♦	HP-2006
Silverado 2500	5.3L V8 F/I	33-2129 ♦	HP-2006
Silverado 2500	6.0L V8 F/I	33-2135 ♦	HP-2006
Suburban 1500	5.3L V8 F/I	33-2129 ♦	HP-2006
Suburban 2500	5.3L V8 F/I	33-2129 ♦	HP-2006
Suburban 2500	6.0L V8 F/I	33-2135 ♦	HP-2006
Tahoe	4.8L V8 F/I	33-2129 ♦	HP-2006
Tahoe	5.3L V8 F/I	33-2129 ♦	HP-2006
Tahoe	5.7L V8 F/I	E-1796 ♦	
Tahoe	5.7L V8 F/I - 2WD	E-1796	HP-3002
Tahoe	5.7L V8 F/I - 4WD	E-1796	HP-2001
Tracker	1.6L L4 F/I	33-2155	HP-1002
Tracker	2.0L L4 F/I	33-2155	HP-1003
Venture	3.4L V6 F/I	33-2156	HP-1001

1999 CHEVROLET

Vehicle	Engine Type	Air Filter	Oil Filter
Astro	4.3L V6 F/I	33-2225	HP-2001
Blazer	4.3L V6 F/I	33-2042 ♦	HP-2001
C1500	5.0L V8 F/I	E-1796 ♦	HP-3002
C1500	5.7L V8 F/I	E-1796 ♦	HP-3002
C1500 Suburban	5.7L V8 F/I	E-1796 ♦	HP-3002
C1500 Suburban	6.5L V8 DSL	E-1796	HP-3002
C2500	5.7L V8 F/I	E-1796 ♦	HP-3002
C2500	6.5L V8 DSL	E-1796	HP-3002
C2500	7.4L V8 F/I	E-1796 ♦	HP-3002
C2500 Suburban	5.7L V8 F/I	E-1796 ♦	HP-3002
C2500 Suburban	6.5L V8 DSL	E-1796	HP-3002
C2500 Suburban	7.4L V8 F/I	E-1796 ♦	HP-3002
C3500	5.7L V8 F/I	E-1796 ♦	HP-3002
C3500	6.5L V8 DSL	E-1796	HP-3002
C3500	7.4L V8 F/I	E-1796 ♦	HP-3002
Camaro	3.8L V6 F/I	33-2118 ♦	HP-1001
Camaro	5.7L V8 F/I	33-2118 ♦	HP-1007
Cavalier	2.2L L4 F/I	33-2143	HP-1001

1999 CHEVROLET

Vehicle	Engine Type	Air Filter	Oil Filter
Cavalier	2.4L L4 F/I	33-2143	HP-1007
Cheyenne	5.7L V8 F/I		HP-3002
Corvette	5.7L V8 F/I	33-2111 ♦	HP-1007
Express 1500	4.3L V6 F/I	33-2111	HP-2001
Express 1500	5.0L V8 F/I	33-2111	HP-3002
Express 1500	5.7L V8 F/I	33-2111	HP-3002
Express 2500	5.7L V8 F/I	33-2111	HP-3002
Express 3500	5.7L V8 F/I	33-2111	HP-3002
Express 3500	6.5L V8 DSL	33-2111	HP-3002
Express 3500	7.4L V8 F/I	33-2111	
Express 3500	7.4L V8 F/I - Long Filter	33-2111	HP-3002
Express 3500	7.4L V8 F/I - short filter	33-2111	HP-1011
K1500	5.0L V8 F/I	E-1796 ♦	HP-2001
K1500	5.7L V8 F/I	E-1796 ♦	HP-2001
K1500 Suburban	5.7L V8 F/I	E-1796 ♦	HP-2001
K1500 Suburban	6.5L V8 DSL	E-1796	HP-3002
K2500	5.7L V8 F/I	E-1796 ♦	HP-2001
K2500	6.5L V8 DSL	E-1796	HP-3002
K2500	7.4L V8 F/I	E-1796 ♦	HP-1011
K2500 Suburban	5.7L V8 F/I	E-1796 ♦	HP-2001
K2500 Suburban	6.5L V8 DSL	E-1796	HP-3002
K2500 Suburban	7.4L V8 F/I	E-1796 ♦	HP-1011
K3500	5.7L V8 F/I	E-1796 ♦	HP-2001
K3500	6.5L V8 DSL	E-1796	HP-3002
K3500	7.4L V8 F/I	E-1796 ♦	HP-1011
Lumina	3.1L V6 F/I	33-2063-1	HP-1001
Lumina	3.8L V6 F/I	33-2063-1	HP-1001
Malibu	2.4L L4 F/I	33-2121-1	HP-1007
Malibu	3.1L V6 F/I	33-2121-1	HP-1001
Metro	1.0L L3 F/I	E-9209	HP-1002
Metro	1.3L L4 F/I	E-9132	HP-1002
Monte Carlo	3.1L V6 F/I	33-2063-1	HP-1001
Monte Carlo	3.8L V6 F/I	33-2063-1	HP-1001
P30	7.4L V8 F/I - VIN B	33-2111	HP-3002
P30	7.4L V8 F/I - VIN J	33-2111	HP-1011
Prizm	1.8L L4 F/I	33-2672	HP-1003
S10 Pickup	2.2L L4 F/I	33-2042 ♦	HP-1001
S10 Pickup	4.3L V6 F/I	33-2042 ♦	HP-2001
Silverado 1500	4.3L V6 F/I	33-2129 ♦	HP-2001
Silverado 1500	4.8L V8 F/I	33-2129 ♦	HP-2006
Silverado 1500	5.3L V8 F/I	33-2129 ♦	HP-2006
Silverado 2500	5.3L V8 F/I	33-2129 ♦	HP-2006
Silverado 2500	6.0L V8 F/I	33-2135 ♦	HP-2006
Tahoe	5.7L V8 F/I	E-1796 ♦	
Tahoe	5.7L V8 F/I - 2WD	E-1796	HP-3002
Tahoe	5.7L V8 F/I - 4WD	E-1796	HP-2001
Tahoe	6.5L V8 DSL	E-1796	HP-3002
Tracker	1.6L L4 F/I	33-2155	HP-1002
Tracker	2.0L L4 F/I	33-2155	HP-1003
Venture	3.4L V6 F/I	33-2156	HP-1001

1998 CHEVROLET

Vehicle	Engine Type	Air Filter	Oil Filter
Astro	4.3L V6 F/I	33-2225	HP-2001
Blazer	4.3L V6 F/I	33-2042 ♦	HP-2001
C1500	4.3L V6 F/I	E-1796 ♦	HP-2001
C1500	5.0L V8 F/I	E-1796 ♦	HP-3002
C1500	5.7L V8 F/I	E-1796 ♦	HP-3002
C1500	6.5L V8 DSL	E-1796	HP-3002
C1500 Suburban	5.7L V8 F/I	E-1796 ♦	HP-3002
C1500 Suburban	6.5L V8 DSL	E-1796	HP-3002
C2500	5.7L V8 F/I	E-1796 ♦	HP-3002
C2500	6.5L V8 DSL	E-1796	HP-3002
C2500	7.4L V8 F/I	E-1796 ♦	HP-3002
C2500 Suburban	5.7L V8 F/I	E-1796 ♦	HP-3002

*Indicates 2 filters required ♦ - Intake kit available - see page 80 Applications updated daily at knfilters.com

1998 CHEVROLET

Vehicle	Engine Type	Air Filter	Oil Filter
C2500 Suburban	6.5L V8 DSL	E-1796	HP-3002
C2500 Suburban	7.4L V8 F/I	E-1796 ♦	HP-3002
C3500	5.7L V8 F/I	E-1796 ♦	HP-3002
C3500	6.5L V8 DSL	E-1796	HP-3002
C3500	7.4L V8 F/I	E-1796 ♦	HP-3002
Camaro	3.8L V6 F/I	33-2118	HP-1001
Camaro	5.7L V8 F/I	33-2118 ♦	HP-1007
Cavalier	2.2L L4 F/I	33-2143	HP-1001
Cavalier	2.4L L4 F/I	33-2143	HP-1007
Cheyenne	5.7L V8 F/I		HP-3002
Corvette	5.7L V8 F/I	33-2111 ♦	HP-1007
Express 1500	4.3L V6 F/I	33-2111	HP-2001
Express 1500	5.0L V8 F/I		HP-3002
Express 1500	5.7L V8 F/I	33-2111	HP-3002
Express 2500	5.7L V8 F/I	33-2111	HP-3002
Express 3500	5.7L V8 F/I	33-2111	HP-3002
Express 3500	7.4L V8 F/I	33-2111	HP-3002
K1500	4.3L V6 F/I	E-1796	HP-2001
K1500	5.0L V8 F/I	E-1796 ♦	HP-2001
K1500	5.7L V8 F/I	E-1796 ♦	HP-2001
K1500	6.5L V8 DSL	E-1796	HP-3002
K1500 Suburban	5.7L V8 F/I	E-1796 ♦	HP-2001
K1500 Suburban	6.5L V8 DSL	E-1796	HP-3002
K2500	5.0L V8 F/I	E-1796 ♦	HP-2001
K2500	5.7L V8 F/I	E-1796 ♦	HP-2001
K2500	6.5L V8 DSL	E-1796	HP-3002
K2500	7.4L V8 F/I	E-1796 ♦	HP-3002
K2500 Suburban	5.7L V8 F/I	E-1796 ♦	HP-2001
K2500 Suburban	6.5L V8 DSL	E-1796	HP-3002
K2500 Suburban	7.4L V8 F/I	E-1796 ♦	HP-3002
K3500	5.7L V8 F/I	E-1796 ♦	HP-2001
K3500	6.5L V8 DSL	E-1796	HP-3002
K3500	7.4L V8 F/I	E-1796 ♦	HP-3002
Lumina	3.1L V6 F/I	33-2063-1	HP-1001
Lumina	3.8L V6 F/I	33-2063-1	HP-1001
Malibu	2.4L L4 F/I	33-2121-1	HP-1007
Malibu	3.1L V6 F/I	33-2121-1	HP-1001
Metro	1.0L L3 F/I	E-9209	HP-1002
Metro	1.3L L4 F/I	E-9132	HP-1002
Monte Carlo	3.1L V6 F/I	33-2063-1	HP-1001
Monte Carlo	3.8L V6 F/I	33-2063-1	HP-1001
P30	7.4L V8 F/I	33-2111	HP-3002
Prizm	1.8L L4 F/I	33-2672	HP-1003
S10 Pickup	2.2L L4 F/I	33-2042 ♦	HP-1001
S10 Pickup	4.3L V6 F/I	33-2042 ♦	HP-2001
Tahoe	5.7L V8 F/I	E-1796 ♦	
Tahoe	5.7L V8 F/I - 2WD	E-1796	HP-3002
Tahoe	5.7L V8 F/I - 4WD	E-1796	HP-2001
Tahoe	6.5L V8 DSL	E-1796	HP-3002
Tracker	1.6L L4 F/I	33-2065	HP-1002
Venture	3.4L V6 F/I	33-2156	HP-1001

1997 CHEVROLET

Vehicle	Engine Type	Air Filter	Oil Filter
Astro	4.3L V6 F/I	33-2225	HP-2001
Blazer	4.3L V6 F/I	33-2042 ♦	HP-2001
C1500	4.3L V6 F/I	E-1796 ♦	HP-2001
C1500	5.0L V8 F/I	E-1796 ♦	HP-3002
C1500	5.7L V8 F/I	E-1796 ♦	HP-3002
C1500	6.5L V8 DSL	E-1796	HP-3002
C1500 Suburban	5.7L V8 F/I	E-1796 ♦	HP-3002
C1500 Suburban	6.5L V8 DSL	E-1796	HP-3002
C2500	5.0L V8 F/I	E-1796	HP-3002
C2500	5.7L V8 F/I	E-1796 ♦	HP-3002
C2500	6.5L V8 DSL	E-1796	HP-3002

1997 CHEVROLET

Vehicle	Engine Type	Air Filter	Oil Filter
C2500	7.4L V8 F/I	E-1796 ♦	HP-3002
C2500 Suburban	5.7L V8 F/I	E-1796 ♦	HP-3002
C2500 Suburban	6.5L V8 DSL	E-1796	HP-3002
C2500 Suburban	7.4L V8 F/I	E-1796 ♦	HP-3002
C3500	5.7L V8 F/I	E-1796 ♦	HP-3002
C3500	6.5L V8 DSL	E-1796	HP-3002
C3500	7.4L V8 F/I	E-1796 ♦	HP-3002
Camaro	3.8L V6 F/I	33-2042	HP-1001
Camaro	5.7L V8 F/I		HP-2002
Camaro	5.7L V8 F/I - exc. SS	33-2042 ♦	HP-2002
Cavalier	2.2L L4 F/I	33-2143	HP-1001
Cavalier	2.4L L4 F/I	33-2143	HP-1007
Cheyenne	5.7L V8 F/I		HP-3002
Corvette	5.7L V8 F/I	33-2111 ♦	HP-1007
Express 1500	5.0L V8 F/I		HP-3002
Express 1500	5.7L V8 F/I	33-2111	HP-3002
Express 2500	5.7L V8 F/I	33-2111	HP-3002
Express 2500	6.5L V8 DSL	33-2111	HP-3002
Express 3500	7.4L V8 F/I	33-2111	HP-3002
K1500	4.3L V6 F/I	E-1796 ♦	HP-2001
K1500	5.0L V8 F/I	E-1796 ♦	HP-2001
K1500	5.7L V8 F/I	E-1796 ♦	HP-2001
K1500	6.5L V8 DSL	E-1796	HP-3002
K1500 Suburban	5.7L V8 F/I	E-1796 ♦	HP-2001
K1500 Suburban	6.5L V8 DSL	E-1796	HP-3002
K2500	5.7L V8 F/I	E-1796 ♦	HP-2001
K2500	6.5L V8 DSL	E-1796	HP-3002
K2500	7.4L V8 F/I	E-1796 ♦	HP-3002
K2500 Suburban	5.7L V8 F/I	E-1796 ♦	HP-2001
K2500 Suburban	6.5L V8 DSL	E-1796	HP-3002
K2500 Suburban	7.4L V8 F/I	E-1796 ♦	HP-3002
K3500	5.7L V8 F/I	E-1796 ♦	HP-2001
K3500	6.5L V8 DSL	E-1796	HP-3002
K3500	7.4L V8 F/I	E-1796 ♦	HP-3002
Lumina	3.1L V6 F/I	33-2063-1	HP-1001
Lumina	3.4L V6 F/I	33-2063-1	HP-2001
Malibu	2.4L L4 F/I	33-2121-1	HP-1007
Malibu	3.1L V6 F/I	33-2121-1	HP-1001
Monte Carlo	3.1L V6 F/I	33-2063-1	HP-1001
Monte Carlo	3.4L V6 F/I	33-2063-1	HP-2001
P30	5.7L V8 F/I	E-1500	HP-2001
P30	7.4L V8 F/I	E-1420	HP-3002
S10 Pickup	2.2L L4 F/I	33-2042 ♦	HP-1001
S10 Pickup	4.3L V6 F/I	33-2042 ♦	HP-2001
Tahoe	5.7L V8 F/I	E-1796 ♦	
Tahoe	5.7L V8 F/I - 2WD	E-1796	HP-3002
Tahoe	5.7L V8 F/I - 4WD	E-1796	HP-2001
Tahoe	6.5L V8 DSL	E-1796	HP-3002
Venture	3.4L V6 F/I	33-2156	HP-1001

1996 CHEVROLET

Vehicle	Engine Type	Air Filter	Oil Filter
Astro	4.3L V6 F/I	33-2225	HP-2001
Beretta	3.1L V6 F/I	33-2068	HP-1001
Blazer	4.3L V6 F/I	33-2042 ♦	HP-2001
C1500	4.3L V6 F/I	E-1796 ♦	HP-2001
C1500	5.0L V8 F/I	E-1796 ♦	HP-3002
C1500	5.7L V8 F/I	E-1796 ♦	HP-3002
C1500	6.5L V8 DSL	33-2062-1	HP-3002
C1500 Suburban	5.7L V8 F/I	E-1796 ♦	HP-3002
C1500 Suburban	6.5L V8 DSL	33-2062-1	HP-3002
C2500	5.7L V8 F/I	E-1796 ♦	HP-3002
C2500	6.5L V8 DSL	33-2062-1	HP-3002
C2500	7.4L V8 F/I	E-1796 ♦	HP-3002
C2500 Suburban	5.7L V8 F/I	E-1796 ♦	HP-3002

*Indicates 2 filters required ♦ - Intake kit available - see page 80 Applications updated daily at knfilters.com

1996 CHEVROLET

Vehicle	Engine Type	Air Filter	Oil Filter
C2500 Suburban	6.5L V8 DSL	33-2062-1	HP-3002
C2500 Suburban	7.4L V8 F/I	E-1796 ♦	HP-3002
C3500	5.7L V8 F/I	E-1796 ♦	HP-3002
C3500	6.5L V8 DSL	33-2062-1	HP-3002
C3500	7.4L V8 F/I	E-1796 ♦	HP-3002
Camaro	3.8L V6 F/I	33-2042	HP-1001
Camaro	5.7L V8 F/I		HP-2002
Camaro	5.7L V8 F/I - exc. SS	33-2042 ♦	HP-2002
Caprice	4.3L V8 F/I	33-2057	HP-2001
Caprice	5.7L V8 F/I	33-2057 ♦	HP-2001
Cavalier	2.2L L4 F/I	33-2143	HP-1001
Cavalier	2.4L L4 F/I	33-2143	HP-1007
Cheyenne	5.7L V8 F/I		HP-3002
Corsica	2.2L L4 F/I	33-2068	HP-1001
Corsica	3.1L V6 F/I	33-2068	HP-1001
Corvette	5.7L V8 F/I	33-2035	HP-2001
Express 1500	4.3L V6 F/I	33-2111	HP-2001
Express 1500	5.0L V8 F/I		HP-3002
Express 1500	5.7L V8 F/I	33-2111	HP-3002
Express 2500	5.7L V8 F/I	33-2111	HP-3002
G30	5.7L V8 F/I	E-1150	HP-3002
Impala SS	5.7L V8 F/I	33-2057 ♦	HP-2001
K1500	4.3L V6 F/I	E-1796 ♦	HP-2001
K1500	5.0L V8 F/I	E-1796 ♦	HP-2001
K1500	5.7L V8 F/I	E-1796 ♦	HP-2001
K1500	6.5L V8 DSL	33-2062-1	HP-3002
K1500 Suburban	5.7L V8 F/I	E-1796 ♦	HP-2001
K1500 Suburban	6.5L V8 DSL	33-2062-1	HP-3002
K2500	5.7L V8 F/I	E-1796 ♦	HP-2001
K2500	6.5L V8 DSL	33-2062-1	HP-3002
K2500	7.4L V8 F/I	E-1796 ♦	HP-3002
K2500 Suburban	5.7L V8 F/I	E-1796 ♦	HP-2001
K2500 Suburban	6.5L V8 DSL	33-2062-1	HP-3002
K2500 Suburban	7.4L V8 F/I	E-1796 ♦	HP-3002
K3500	5.7L V8 F/I	E-1796 ♦	HP-2001
K3500	6.5L V8 DSL	33-2062-1	HP-3002
K3500	7.4L V8 F/I	E-1796 ♦	HP-3002
Lumina	3.1L V6 F/I	33-2063-1	HP-1001
Lumina	3.4L V6 F/I	33-2063-1	HP-2001
Lumina APV	3.4L V6 F/I	33-2022	HP-1001
Monte Carlo	3.1L V6 F/I	33-2063-1	HP-1001
Monte Carlo	3.4L V6 F/I	33-2063-1	HP-2001
P30	7.4L V8 F/I	E-1420	HP-3002
S10 Pickup	2.2L L4 F/I	33-2042 ♦	HP-1001
S10 Pickup	4.3L V6 F/I	33-2042 ♦	HP-2001
Tahoe	5.7L V8 F/I	E-1796 ♦	
Tahoe	5.7L V8 F/I - 2WD	E-1796	HP-3002
Tahoe	5.7L V8 F/I - 4WD	E-1796	HP-2001
Tahoe	6.5L V8 DSL		HP-3002

1995 CHEVROLET

Vehicle	Engine Type	Air Filter	Oil Filter
Astro	4.3L V6 F/I	33-2042	HP-2001
Beretta	2.2L L4 F/I	33-2068	HP-1001
Beretta	3.1L V6 F/I	33-2068	HP-1001
Blazer	4.3L V6 F/I	33-2042 ♦	HP-2001
C1500	4.3L V6 F/I	E-1150	HP-2001
C1500	5.0L V8 F/I	E-1500 ♦	HP-3002
C1500	5.7L V8 F/I	E-1500 ♦	HP-3002
C1500	6.5L V8 DSL - exc. Turbo	E-1690	HP-3002
C1500	6.5L V8 DSL - Turbo	33-2062-1	HP-3002
C1500 Suburban	5.7L V8 F/I	E-1500 ♦	HP-3002
C1500 Suburban	6.5L V8 DSL	33-2062-1	HP-3002
C2500	5.0L V8 F/I	E-1500 ♦	HP-3002
C2500	5.7L V8 F/I	E-1500 ♦	HP-3002

1995 CHEVROLET

Vehicle	Engine Type	Air Filter	Oil Filter
C2500	6.5L V8 DSL - exc. Turbo	E-1690	HP-3002
C2500	6.5L V8 DSL - Turbo	33-2062-1	HP-3002
C2500	7.4L V8 F/I	E-1500 ♦	HP-3002
C2500 Suburban	5.7L V8 F/I	E-1500 ♦	HP-3002
C2500 Suburban	6.5L V8 DSL	33-2062-1	HP-3002
C2500 Suburban	7.4L V8 F/I	E-1500 ♦	HP-3002
C3500	5.7L V8 F/I	E-1500 ♦	HP-3002
C3500	6.5L V8 DSL	33-2062-1	HP-3002
C3500	7.4L V8 F/I	E-1500 ♦	HP-3002
Camaro	3.4L V6 F/I	33-2042 ♦	HP-1001
Camaro	3.8L V6 F/I	33-2042	HP-1001
Camaro	5.7L V8 F/I	33-2042 ♦	HP-2002
Caprice	4.3L V8 F/I	33-2057	HP-2001
Caprice	5.7L V8 F/I	33-2057 ♦	HP-2001
Cavalier	2.2L L4 F/I	33-2143	HP-1001
Cavalier	2.3L L4 F/I	33-2143	HP-1001
Cheyenne	5.7L V8 F/I		HP-3002
Corsica	2.2L L4 F/I	33-2068	HP-1001
Corsica	3.1L V6 F/I	33-2068	HP-1001
Corvette	5.7L V8 F/I	33-2035	HP-2001
Corvette ZR-1	5.7L V8 F/I	33-2035	HP-2007
G10	4.3L V6 F/I	E-1150	HP-2001
G20 Van	4.3L V6 F/I	E-1150	HP-2001
G20 Van	5.7L V8 F/I	E-1150	HP-3002
G30	5.7L V8 F/I	E-1150	HP-3002
G30	7.4L V8 F/I	E-1500	HP-3002
Impala SS	5.7L V8 F/I	33-2057 ♦	HP-2001
K1500	4.3L V6 F/I	E-1150	HP-2001
K1500	5.0L V8 F/I	E-1500 ♦	HP-2001
K1500	5.7L V8 F/I	E-1500 ♦	HP-2001
K1500	6.5L V8 DSL - exc. Turbo	E-1690	HP-3002
K1500	6.5L V8 DSL - Turbo	33-2062-1	HP-3002
K1500 Suburban	5.7L V8 F/I	E-1500 ♦	HP-2001
K1500 Suburban	6.5L V8 DSL	33-2062-1	HP-3002
K2500	4.3L V6 F/I	E-1150	HP-2001
K2500	5.7L V8 F/I	E-1500 ♦	HP-2001
K2500	6.5L V8 DSL - exc. Turbo	E-1690	HP-3002
K2500	6.5L V8 DSL - Turbo	33-2062-1	HP-3002
K2500	7.4L V8 F/I	E-1500 ♦	HP-3002
K2500 Suburban	5.7L V8 F/I	E-1500 ♦	HP-2001
K2500 Suburban	6.5L V8 DSL	33-2062-1	HP-3002
K2500 Suburban	7.4L V8 F/I	E-1500 ♦	HP-3002
K3500	5.7L V8 F/I	E-1500 ♦	HP-2001
K3500	6.5L V8 DSL	33-2062-1	HP-3002
K3500	7.4L V8 F/I	E-1500 ♦	HP-3002
Lumina	3.1L V6 F/I	33-2063-1	HP-1001
Lumina	3.4L V6 F/I	33-2063-1	HP-2001
Lumina APV	3.1L V6 F/I	E-1065	HP-1001
Lumina APV	3.8L V6 F/I	33-2022	HP-1001
Monte Carlo	3.1L V6 F/I	33-2063-1	HP-1001
Monte Carlo	3.4L V6 F/I	33-2063-1	HP-2001
P30	7.4L V8 F/I	E-1500	HP-3002
S10 Pickup	2.2L L4 F/I	33-2042 ♦	HP-1001
S10 Pickup	4.3L V6 CPI	33-2042 ♦	HP-2001
S10 Pickup	4.3L V6 TBI	E-1065 ♦	HP-2001
Tahoe	5.7L V8 F/I	E-1500 ♦	
Tahoe	5.7L V8 F/I - 2WD	E-1500	HP-3002
Tahoe	5.7L V8 F/I - 4WD	E-1500	HP-2001
Tahoe	6.5L V8 DSL	33-2062-1	HP-3002

1994 CHEVROLET

Vehicle	Engine Type	Air Filter	Oil Filter
Astro	4.3L V6 CPI	33-2042	HP-2001
Astro	4.3L V6 TBI	E-1065	HP-2001

*Indicates 2 filters required ♦ - Intake kit available - see page 80 Applications updated daily at knfilters.com

Vehicle	Engine Type	Air Filter	Oil Filter
1994 CHEVROLET			
Beretta	3.1L V6 F/I	33-2068	HP-1001
Blazer	3.1L V6 F/I		HP-1001
Blazer	5.7L V8 F/I	E-1500 ♦	
Blazer	5.7L V8 F/I - 2WD	E-1500	HP-3002
Blazer	5.7L V8 F/I - 4WD	E-1500	HP-2001
Blazer	6.5L V8 DSL	33-2062-1	HP-3002
C1500	4.3L V6 F/I	E-1150	HP-2001
C1500	5.0L V8 F/I	E-1500 ♦	HP-3002
C1500	5.7L V8 F/I	E-1500 ♦	HP-3002
C1500	6.5L V8 DSL - exc. Turbo	E-1690	HP-3002
C1500	6.5L V8 DSL - Turbo	33-2062-1	HP-3002
C1500 Suburban	5.7L V8 F/I	E-1500 ♦	HP-3002
C1500 Suburban	6.5L V8 DSL	33-2062-1	HP-3002
C2500	4.3L V6 F/I	E-1150	HP-2001
C2500	5.0L V8 F/I	E-1500 ♦	HP-3002
C2500	5.7L V8 F/I	E-1500 ♦	HP-3002
C2500	6.5L V8 DSL		HP-3002
C2500	6.5L V8 DSL - exc. Turbo	E-1690	HP-3002
C2500	6.5L V8 DSL - Turbo	33-2062-1	HP-3002
C2500	7.4L V8 F/I	E-1500 ♦	HP-3002
C2500 Suburban	5.7L V8 F/I	E-1500 ♦	HP-3002
C2500 Suburban	6.5L V8 DSL	33-2062-1	HP-3002
C2500 Suburban	7.4L V8 F/I	E-1500 ♦	HP-3002
C3500	5.7L V8 F/I	E-1500 ♦	HP-3002
C3500	6.5L V8 DSL	33-2062-1	HP-3002
C3500	7.4L V8 F/I	E-1500 ♦	HP-3002
Camaro	3.4L V6 F/I	33-2042 ♦	HP-1001
Camaro	5.7L V8 F/I	33-2042 ♦	HP-2002
Caprice	4.3L V8 F/I	33-2057	HP-2001
Caprice	5.7L V8 F/I	33-2057 ♦	HP-2001
Cavalier	2.2L L4 F/I	33-2022	HP-1001
Cavalier	3.1L V6 F/I	E-0850	HP-1001
Cavalier Z24	3.1L V6 F/I	E-0890	HP-1001
Corsica	3.1L V6 F/I	33-2068	HP-1001
Corvette	5.7L V8 F/I	33-2035	HP-2001
Corvette ZR-1	5.7L V8 F/I	33-2035	HP-2007
G10	4.3L V6 F/I	E-1150	HP-2001
G20 Van	4.3L V6 F/I	E-1150	HP-2001
G20 Van	5.7L V8 F/I	E-1150	HP-3002
G20 Van	6.5L V8 DSL	E-1690	HP-3002
G30	7.4L V8 F/I	E-1500	HP-3002
Impala SS	5.7L V8 F/I	33-2057 ♦	HP-2001
K1500	4.3L V6 F/I	E-1150	HP-2001
K1500	5.0L V8 F/I	E-1500 ♦	HP-2001
K1500	5.7L V8 F/I	E-1500 ♦	HP-2001
K1500	6.5L V8 DSL		HP-3002
K1500	6.5L V8 DSL - exc. Turbo	E-1690	HP-3002
K1500	6.5L V8 DSL - Turbo	33-2062-1	HP-3002
K1500 Suburban	5.7L V8 F/I	E-1500 ♦	HP-2001
K1500 Suburban	6.5L V8 DSL	33-2062-1	HP-3002
K2500	5.0L V8 F/I	E-1500 ♦	HP-2001
K2500	5.7L V8 F/I	E-1500 ♦	HP-2001
K2500	6.5L V8 DSL - exc. Turbo	E-1690	HP-3002
K2500	6.5L V8 DSL - Turbo	33-2062-1	HP-3002
K2500	7.4L V8 F/I	E-1500 ♦	HP-3002
K2500 Suburban	5.7L V8 F/I	E-1500 ♦	HP-2001
K2500 Suburban	6.5L V8 DSL	33-2062-1	HP-3002
K2500 Suburban	7.4L V8 F/I	E-1500 ♦	HP-3002
K3500	5.7L V8 F/I	E-1500 ♦	HP-2001
K3500	6.5L V8 DSL	33-2062-1	HP-3002
K3500	7.4L V8 F/I	E-1500 ♦	HP-3002

Vehicle	Engine Type	Air Filter	Oil Filter
1994 CHEVROLET			
Lumina	3.1L V6 F/I	33-2063-1	HP-1001
Lumina	3.4L V6 F/I	33-2063-1	HP-2001
Lumina APV	3.1L V6 F/I	E-1065	HP-1001
Motorhome	7.4L V8 F/I - Class C, w/ 3-7/16 in Tall Filter	E-1500	
P30	7.4L V8 F/I	E-1500	HP-3002
S10 Blazer	4.3L V6 CPI	33-2042	HP-2001
S10 Blazer	4.3L V6 TBI	E-1065 ♦	HP-2001
S10 Pickup	2.2L L4 F/I	33-2042 ♦	HP-1001
S10 Pickup	4.3L V6 CPI	33-2042 ♦	HP-2001
S10 Pickup	4.3L V6 TBI	E-1065 ♦	HP-2001
1993 CHEVROLET			
Astro	4.3L V6 CPI	33-2042	HP-2001
Astro	4.3L V6 TBI	E-1065	HP-2001
Beretta	2.2L L4 F/I	33-2022	HP-1001
Beretta	2.3L L4 F/I	33-2022	HP-1001
Beretta	3.1L V6 F/I	33-2037	HP-1001
Blazer	3.1L V6 F/I		HP-1001
Blazer	5.7L V8 F/I	E-1500 ♦	
Blazer	5.7L V8 F/I - 2WD	E-1500	HP-3002
Blazer	5.7L V8 F/I - 4WD	E-1500	HP-2001
C1500	4.3L V6 F/I	E-1150	HP-2001
C1500	5.0L V8 F/I	E-1500 ♦	HP-3002
C1500	5.7L V8 F/I	E-1500 ♦	HP-3002
C1500	6.2L V8 DSL	E-1690	HP-3002
C1500	7.4L V8 F/I	E-1500 ♦	HP-3002
C1500 Suburban	5.7L V8 F/I	E-1500 ♦	HP-3002
C2500	5.7L V8 F/I	E-1500 ♦	HP-3002
C2500	6.2L V8 DSL	E-1690	HP-3002
C2500	6.5L V8 DSL	33-2062-1	HP-3002
C2500	7.4L V8 F/I	E-1500 ♦	HP-3002
C2500 Suburban	5.7L V8 F/I	E-1500 ♦	HP-3002
C2500 Suburban	6.2L V8 DSL	E-1690	HP-3002
C2500 Suburban	6.5L V8 DSL	33-2062-1	HP-3002
C2500 Suburban	7.4L V8 F/I	E-1500 ♦	HP-3002
C3500	5.7L V8 F/I	E-1500 ♦	HP-3002
C3500	6.5L V8 DSL	33-2062-1	HP-3002
C3500	7.4L V8 F/I	E-1500 ♦	HP-3002
Camaro	3.4L V6 F/I	33-2042 ♦	HP-1001
Camaro	5.7L V8 F/I	33-2042 ♦	HP-2002
Caprice	4.3L V6 F/I	33-2051	HP-2001
Caprice	5.0L V8 F/I	33-2051	HP-2002
Caprice	5.7L V8 F/I	33-2051	HP-2002
Cavalier	2.2L L4 F/I	33-2022	HP-1001
Cavalier	3.1L V6 F/I	E-0850	HP-1001
Cavalier Z24	3.1L V6 F/I	E-0890	HP-1001
Corsica	3.1L V6 F/I	33-2037	HP-1001
Corvette	5.7L V8 F/I	33-2035	HP-2001
Corvette ZR-1	5.7L V8 F/I	33-2035	HP-2007
G10	5.7L V8 F/I	E-1150	HP-3002
G20 Van	5.7L V8 F/I	E-1150	HP-3002
K1500	4.3L V6 F/I	E-1150	HP-2001
K1500	5.0L V8 F/I	E-1500 ♦	HP-2001
K1500	5.7L V8 F/I	E-1500 ♦	HP-2001
K1500	6.2L V8 DSL	E-1690	HP-3002
K1500 Suburban	5.7L V8 F/I	E-1500 ♦	HP-2001
K2500	5.7L V8 F/I	E-1500 ♦	HP-2001
K2500	6.2L V8 DSL	E-1690	HP-3002
K2500	6.5L V8 DSL	33-2062-1	HP-3002
K2500	7.4L V8 F/I	E-1500 ♦	HP-3002
K2500 Suburban	5.7L V8 F/I	E-1500 ♦	HP-2001
K2500 Suburban	7.4L V8 F/I	E-1500 ♦	HP-3002
K3500	5.7L V8 F/I	E-1500 ♦	HP-2001
K3500	6.5L V8 DSL	33-2062-1	HP-3002

*Indicates 2 filters required ♦ - Intake kit available - see page 80 Applications updated daily at knfilters.com

Vehicle	Engine Type	Air Filter	Oil Filter
1993 CHEVROLET			
K3500	7.4L V8 F/I	E-1500 ♦	HP-3002
Lumina	3.1L V6 F/I	33-2038	HP-1001
Lumina	3.4L V6 F/I	33-2038	HP-2001
Lumina APV	3.1L V6 F/I	E-1065	HP-1001
P30	7.4L V8 F/I	E-1500	HP-3002
S10 Blazer	4.3L V6 CPI	33-2042	HP-2001
S10 Blazer	4.3L V6 TBI	E-1065 ♦	HP-2001
S10 Pickup	2.5L L4 TBI	E-1015	HP-1001
S10 Pickup	2.8L V6 TBI	E-1065	HP-2001
S10 Pickup	4.3L V6 CPI	33-2042	HP-2001
S10 Pickup	4.3L V6 TBI	E-1065 ♦	HP-2001
1992 CHEVROLET			
Astro	4.3L V6 CPI	33-2042	HP-2001
Astro	4.3L V6 TBI	E-1065	HP-2001
Blazer	5.7L V8 F/I	E-1500 ♦	
Blazer	5.7L V8 F/I - 2WD	E-1500	HP-3002
Blazer	5.7L V8 F/I - 4WD	E-1500	HP-2001
C1500	4.3L V6 F/I	E-1150	HP-2001
C1500	5.0L V8 F/I	E-1500 ♦	HP-3002
C1500	5.7L V8 F/I	E-1500 ♦	HP-3002
C1500	6.2L V8 DSL	E-1690	HP-3002
C1500	7.4L V8 F/I	E-1500 ♦	HP-3002
C1500 Suburban	5.7L V8 F/I	E-1500 ♦	HP-3002
C2500	5.0L V8 F/I	E-1500 ♦	HP-3002
C2500	5.7L V8 F/I	E-1500 ♦	HP-3002
C2500	6.5L V8 DSL	33-2062-1	HP-3002
C2500 Suburban	5.7L V8 F/I	E-1500 ♦	HP-3002
C2500 Suburban	7.4L V8 F/I	E-1500 ♦	HP-3002
C3500	5.7L V8 F/I	E-1500 ♦	HP-3002
C3500	6.5L V8 DSL	33-2062-1	HP-3002
C3500	7.4L V8 F/I	E-1500 ♦	HP-3002
Camaro	3.1L V6 F/I	E-0890	HP-2001
Camaro	5.0L V8 TBI	E-1450	HP-2002
Camaro	5.0L V8 TPI	33-2008-1*	HP-2002
Camaro	5.7L V8 TPI	33-2008-1*	HP-2002
Caprice	4.3L V6 F/I	33-2051	HP-2001
Caprice	5.0L V8 F/I	33-2051	HP-2002
Caprice	5.7L V8 F/I	33-2051	HP-2002
Cavalier	2.2L L4 F/I	33-2022	HP-1001
Cavalier Z24	3.1L V6 F/I	E-0890	HP-1001
Corvette	5.7L V8 F/I	33-2035	HP-2001
Corvette ZR-1	5.7L V8 F/I	33-2035	HP-2007
G20 Van	4.3L V6 F/I	E-1150	HP-2001
G20 Van	5.7L V8 F/I	E-1150	HP-3002
G30	5.7L V8 F/I	E-1150	HP-3002
K1500	4.3L V6 F/I	E-1150	HP-2001
K1500	5.0L V8 F/I	E-1500 ♦	HP-2001
K1500	5.7L V8 F/I	E-1500 ♦	HP-2001
K1500	6.2L V8 DSL	E-1690	HP-3002
K1500 Suburban	5.7L V8 F/I	E-1500 ♦	HP-2001
K2500	5.7L V8 F/I	E-1500 ♦	HP-2001
K2500	6.2L V8 DSL	E-1690	HP-3002
K2500	6.5L V8 DSL	33-2062-1	HP-3002
K2500	7.4L V8 F/I	E-1500 ♦	HP-3002
K2500 Suburban	5.7L V8 F/I	E-1500 ♦	HP-2001
K2500 Suburban	7.4L V8 F/I	E-1500 ♦	HP-3002
K3500	5.7L V8 F/I	E-1500 ♦	HP-2001
K3500	6.5L V8 DSL	33-2062-1	HP-3002
K3500	7.4L V8 F/I	E-1500 ♦	HP-3002
Lumina	3.1L V6 F/I	33-2038	HP-2001
Lumina	3.4L V6 F/I	33-2038	HP-2001
Lumina APV	3.1L V6 F/I	E-1065	HP-2001
Lumina APV	3.8L V6 F/I	33-2022	HP-1001

Vehicle	Engine Type	Air Filter	Oil Filter
1992 CHEVROLET			
P30	7.4L V8 F/I	E-1500	HP-3002
S10 Blazer	4.3L V6 CPI	33-2042	HP-2001
S10 Pickup	2.5L L4 TBI	E-1015	HP-1001
S10 Pickup	2.8L V6 TBI	E-1065	HP-2001
S10 Pickup	4.3L V6 CPI	33-2042	HP-2001
S10 Pickup	4.3L V6 TBI	E-1065 ♦	HP-2001
1991 CHEVROLET			
Astro	4.3L V6 F/I	E-1065	HP-2001
Beretta	3.1L V6 F/I	33-2037	HP-1001
Blazer	5.7L V8 F/I	E-1500 ♦	HP-3002
C1500	4.3L V6 F/I	E-1150	HP-2001
C1500	5.0L V8 F/I	E-1500 ♦	HP-3002
C1500	5.7L V8 F/I	E-1500 ♦	HP-3002
C1500	6.2L V8 DSL	E-1690	HP-3002
C1500	7.4L V8 F/I		HP-3002
C1500	7.4L V8 F/I - 3-7/16 in tall filter	E-1500 ♦	HP-3002
C1500	7.4L V8 F/I - 5-1/2 in tall filter	E-1420 ♦	HP-3002
C2500	5.7L V8 F/I	E-1500 ♦	HP-3002
C2500	7.4L V8 F/I		HP-3002
C2500	7.4L V8 F/I - 3-7/16 in tall filter	E-1500 ♦	HP-3002
C2500	7.4L V8 F/I - 5-1/2 in tall filter	E-1420 ♦	HP-3002
C3500	5.7L V8 F/I	E-1500 ♦	HP-3002
C3500	7.4L V8 F/I		HP-3002
C3500	7.4L V8 F/I - 3-7/16 in tall filter	E-1500 ♦	HP-3002
C3500	7.4L V8 F/I - 5-1/2 in tall filter	E-1420 ♦	HP-3002
Camaro	3.1L V6 F/I	E-0890	HP-2001
Camaro	5.0L V8 TBI	E-1450	HP-2002
Camaro	5.0L V8 TPI	33-2008-1*	HP-2002
Camaro	5.7L V8 TPI	33-2008-1*	HP-2002
Caprice	5.0L V8 F/I	33-2051	HP-2002
Caprice	5.7L V8 F/I	33-2051	HP-2002
Cavalier	2.2L L4 F/I	E-1015	HP-2001
Cavalier	3.1L V6 F/I	E-0850	HP-1001
Cavalier Z24	3.1L V6 F/I	E-0890	HP-1001
Corsica	2.2L L4 F/I	E-1015	HP-2001
Corsica	3.1L V6 F/I	33-2037	HP-1001
Corvette	5.7L V8 F/I	33-2035	HP-2002
Corvette ZR-1	5.7L V8 F/I	33-2035	HP-2007
G20 Van	5.0L V8 F/I	E-1150	HP-3002
G20 Van	5.7L V8 F/I	E-1150	HP-3002
K1500	4.3L V6 F/I	E-1150	HP-2001
K1500	5.0L V8 F/I	E-1500 ♦	HP-2001
K1500	5.7L V8 F/I	E-1500 ♦	HP-2001
K1500	6.2L V8 DSL	E-1690	HP-3002
K2500	5.7L V8 F/I	E-1500 ♦	HP-2001
K2500	7.4L V8 F/I		HP-3002
K2500	7.4L V8 F/I - 3-7/16 in tall filter	E-1500 ♦	HP-3002
K2500	7.4L V8 F/I - 5-1/2 in tall filter	E-1420 ♦	HP-3002
K3500	7.4L V8 F/I		HP-3002
K3500	7.4L V8 F/I - 3-7/16 in tall filter	E-1500 ♦	HP-3002
K3500	7.4L V8 F/I - 5-1/2 in tall filter	E-1420 ♦	HP-3002
Lumina	3.1L V6 F/I	33-2038	HP-2001
Lumina APV	3.1L V6 F/I	E-1065	HP-2001
R1500 Suburban	5.7L V8 F/I	E-1500 ♦	HP-3002
R1500 Suburban	6.2L V8 DSL	E-1690	HP-3002
R2500 Suburban	5.7L V8 F/I	E-1500 ♦	HP-3002
R2500 Suburban	6.2L V8 DSL	E-1690	HP-3002
R2500 Suburban	7.4L V8 F/I		HP-3002

*Indicates 2 filters required ♦ - Intake kit available - see page 80 Applications updated daily at knfilters.com

Vehicle	Engine Type	Air Filter	Oil Filter
1991 CHEVROLET			
R2500 Suburban	7.4L V8 F/I - 3-7/16 in tall filter	E-1500 ♦	HP-3002
R2500 Suburban	7.4L V8 F/I - 5-1/2 in tall filter	E-1420 ♦	HP-3002
S10 Blazer	4.3L V6 TBI	E-1065 ♦	HP-2001
S10 Pickup	2.5L L4 TBI	E-1015	HP-1001
S10 Pickup	2.8L V6 TBI	E-1065	HP-2001
S10 Pickup	4.3L V6 TBI	E-1065 ♦	HP-2001
Tracker	1.6L L4 F/I	33-2700	HP-1002
V1500 Suburban	5.7L V8 F/I	E-1500 ♦	HP-3002
V2500 Suburban	5.7L V8 F/I	E-1500 ♦	HP-3002
1990 CHEVROLET			
Astro	4.3L V6 F/I	E-1065	HP-2001
Beretta	2.3L L4 F/I	33-2022	HP-1001
Beretta	3.1L V6 F/I	33-2037	HP-1001
Blazer	5.7L V8 F/I	E-1500 ♦	HP-3002
Blazer	6.2L V8 DSL	E-1690	HP-3002
C1500	4.3L V6 F/I	E-1150	HP-2001
C1500	5.0L V8 F/I	E-1500 ♦	HP-3002
C1500	5.7L V8 F/I	E-1500 ♦	HP-3002
C1500	6.2L V8 DSL	E-1690	HP-3002
C1500	7.4L V8 F/I		HP-3002
C1500	7.4L V8 F/I - 3-7/16 in tall filter	E-1500 ♦	HP-3002
C1500	7.4L V8 F/I - 5-1/2 in tall filter	E-1420 ♦	HP-3002
C2500	5.7L V8 F/I	E-1500 ♦	HP-3002
C3500	6.2L V8 DSL	E-1690	HP-3002
C3500	7.4L V8 F/I		HP-3002
C3500	7.4L V8 F/I - 3-7/16 in tall filter	E-1500 ♦	HP-3002
C3500	7.4L V8 F/I - 5-1/2 in tall filter	E-1420 ♦	HP-3002
Camaro	3.1L V6 F/I	E-0890	HP-2001
Camaro	5.0L V8 TBI	E-1450	HP-2002
Camaro	5.0L V8 TPI	33-2008-1*	HP-2002
Camaro	5.7L V8 F/I	33-2008-1*	HP-2002
Caprice	5.0L V8 CARB		HP-2006
Caprice	5.0L V8 F/I	E-1500	HP-2002
Caprice	5.7L V8 F/I	E-1500	HP-2002
Cavalier	2.2L L4 F/I	E-1015	HP-2001
Cavalier	3.1L V6 F/I	E-0850	HP-1001
Cavalier Z24	3.1L V6 F/I	E-0890	HP-1001
Corsica	3.1L V6 F/I	33-2037	HP-1001
Corvette	5.7L V8 F/I	33-2035	HP-2002
Corvette ZR-1	5.7L V8 F/I	33-2035	HP-2007
G10	4.3L V6 F/I	E-1150	HP-2001
G20 Van	5.0L V8 F/I	E-1150	HP-3002
G20 Van	5.7L V8 F/I	E-1150	HP-3002
K1500	4.3L V6 F/I	E-1150	HP-2001
K1500	5.0L V8 F/I	E-1500 ♦	HP-2001
K1500	5.7L V8 F/I	E-1500 ♦	HP-2001
K1500	6.2L V8 DSL	E-1690	HP-3002
K2500	5.7L V8 F/I	E-1500 ♦	HP-2001
K2500	6.2L V8 DSL	E-1690	HP-3002
K3500	7.4L V8 F/I		HP-3002
K3500	7.4L V8 F/I - 3-7/16 in tall filter	E-1500 ♦	HP-3002
K3500	7.4L V8 F/I - 5-1/2 in tall filter	E-1420 ♦	HP-3002
Lumina	3.1L V6 F/I	33-2038	HP-2001
Lumina APV	3.1L V6 F/I	E-1065	HP-2001
P30	7.4L V8 F/I	E-1500	HP-3002
R1500 Suburban	5.7L V8 F/I	E-1500 ♦	HP-3002
R2500 Suburban	7.4L V8 F/I		HP-3002
R2500 Suburban	7.4L V8 F/I - 3-7/16 in tall filter	E-1500 ♦	HP-3002

Vehicle	Engine Type	Air Filter	Oil Filter
1990 CHEVROLET			
S10 Blazer	4.3L V6 TBI	E-1065 ♦	HP-2001
S10 Pickup	2.5L L4 TBI	E-1015	HP-1001
S10 Pickup	2.8L V6 F/I	E-1065	HP-2001
S10 Pickup	4.3L V6 TBI	E-1065 ♦	HP-2001
V1500 Suburban	5.7L V8 F/I	E-1500 ♦	HP-3002
V2500 Suburban	5.7L V8 F/I	E-1500 ♦	HP-3002
1989 CHEVROLET			
Beretta	2.8L V6 F/I	33-2037	HP-1001
Blazer	5.7L V8 F/I	E-1500 ♦	HP-3002
Blazer	6.2L V8 DSL	E-1690	HP-3002
C1500	4.3L V6 F/I	E-1150	HP-2001
C1500	5.0L V8 F/I	E-1500 ♦	HP-3002
C1500	5.7L V8 F/I	E-1500 ♦	HP-3002
C1500	6.2L V8 DSL	E-1690	HP-3002
C2500	5.7L V8 F/I	E-1500 ♦	HP-3002
C2500	6.2L V8 DSL	E-1690	HP-3002
C3500	5.7L V8 F/I	E-1500 ♦	HP-3002
C3500	6.2L V8 DSL	E-1690	HP-3002
C3500	7.4L V8 F/I		HP-3002
C3500	7.4L V8 F/I - 3-7/16 in tall filter	E-1500 ♦	HP-3002
C3500	7.4L V8 F/I - 5-1/2 in tall filter	E-1420 ♦	HP-3002
Camaro	2.8L V6 F/I	33-2008-1*	HP-2001
Camaro	5.0L V8 MFI	33-2008-1*	HP-2002
Camaro	5.0L V8 TBI	E-1450	HP-2002
Camaro	5.7L V8 F/I	33-2008-1*	HP-2002
Caprice	5.0L V8 CARB		HP-2006
Caprice	5.0L V8 F/I	E-1500	HP-2002
Caprice	5.7L V8 F/I	E-1500	
Caprice	5.7L V8 F/I - w/o oil cooler	E-1500	HP-3002
Caprice	5.7L V8 F/I - w/oil cooler	E-1500	HP-2002
Cavalier	2.0L L4 F/I		HP-2001
Cavalier	2.8L V6 F/I	E-0850	HP-1001
Cavalier Z24	2.8L V6 F/I	E-0890	HP-1001
Celebrity	2.8L V6 F/I	E-0850	HP-2001
Corsica	2.8L V6 F/I	33-2037	HP-1001
Corvette	5.7L V8 F/I	33-2014	HP-2002
G20 Van	5.0L V8 F/I	E-1150	HP-3002
G20 Van	5.7L V8 F/I	E-1150	HP-3002
G30	5.7L V8 F/I	E-1150	HP-3002
K1500	4.3L V6 F/I	E-1150	HP-2001
K1500	5.0L V8 F/I	E-1500 ♦	HP-2001
K1500	5.7L V8 F/I	E-1500 ♦	HP-2001
K1500	6.2L V8 DSL	E-1690	HP-3002
K2500	5.7L V8 F/I	E-1500 ♦	HP-2001
K2500	6.2L V8 DSL	E-1690	HP-3002
K3500	7.4L V8 F/I		HP-3002
K3500	7.4L V8 F/I - 3-7/16 in tall filter	E-1500 ♦	HP-3002
K3500	7.4L V8 F/I - 5-1/2 in tall filter	E-1420 ♦	HP-3002
P30	7.4L V8 CARB	E-1420	HP-3002
R1500 Suburban	5.7L V8 F/I	E-1500 ♦	HP-3002
R2500 Suburban	5.7L V8 F/I	E-1500 ♦	HP-3002
R2500 Suburban	7.4L V8 F/I		HP-3002
R2500 Suburban	7.4L V8 F/I - 3-7/16 in tall filter	E-1500 ♦	HP-3002
R2500 Suburban	7.4L V8 F/I - 5-1/2 in tall filter	E-1420 ♦	HP-3002
R3500	7.4L V8 CARB		HP-3002
R3500	7.4L V8 CARB - 3-7/16 in tall filter	E-1500	HP-3002
R3500	7.4L V8 F/I		HP-3002
R3500	7.4L V8 F/I - 3-7/16 in tall filter	E-1500 ♦	HP-3002

*Indicates 2 filters required ♦ - Intake kit available - see page 80 Applications updated daily at knfilters.com

Vehicle	Engine Type	Air Filter	Oil Filter
1989 CHEVROLET			
S10 Blazer	2.5L L4 F/I	E-1015	HP-1001
S10 Blazer	2.8L V6 F/I	E-1065	
S10 Blazer	2.8L V6 F/I - 2WD	E-1065	HP-2001
S10 Blazer	2.8L V6 F/I - 4WD	E-1065	HP-1001
S10 Blazer	4.3L V6 TBI	E-1065 ♦	HP-2001
S10 Pickup	2.5L L4 F/I	E-1015	HP-1001
S10 Pickup	2.8L V6 F/I	E-1065	
S10 Pickup	2.8L V6 F/I - 2WD	E-1065	HP-2001
S10 Pickup	2.8L V6 F/I - 4WD	E-1065	HP-1001
S10 Pickup	4.3L V6 TBI	E-1065 ♦	HP-2001
V1500 Suburban	5.7L V8 F/I	E-1500 ♦	HP-3002
V2500 Suburban	5.7L V8 F/I	E-1500 ♦	HP-3002
1988 CHEVROLET			
Beretta	2.8L V6 F/I	E-0930	HP-1001
Blazer	5.7L V8 F/I	E-1500 ♦	HP-3002
Blazer	6.2L V8 DSL	E-1690	HP-3002
C1500	4.3L V6 F/I	E-1150	HP-2001
C1500	5.0L V8 F/I	E-1500 ♦	HP-3002
C1500	5.7L V8 F/I	E-1500 ♦	HP-3002
C1500	6.2L V8 DSL	E-1690	HP-3002
C2500	5.7L V8 F/I	E-1500 ♦	HP-3002
C2500	6.2L V8 DSL	E-1690	HP-3002
C3500	5.7L V8 F/I	E-1500 ♦	HP-3002
C3500	7.4L V8 F/I		HP-3002
C3500	7.4L V8 F/I - 3-7/16 in tall filter	E-1500 ♦	HP-3002
C3500	7.4L V8 F/I - 5-1/2 in tall filter	E-1420 ♦	HP-3002
Camaro	2.8L V6 F/I	33-2008-1*	HP-1001
Camaro	5.0L V8 MFI	33-2008-1*	HP-2002
Camaro	5.0L V8 TBI	E-1450	HP-2002
Camaro	5.7L V8 F/I	33-2008-1*	HP-2002
Caprice	5.0L V8 CARB - VIN H	E-1500	HP-2002
Caprice	5.0L V8 CARB - VIN Y	E-1500	HP-2006
Caprice	5.7L V8 CARB	E-1500	
Caprice	5.7L V8 CARB - w/o oil cooler	E-1500	HP-3002
Caprice	5.7L V8 CARB - w/oil cooler	E-1500	HP-2002
Cavalier	2.0L L4 F/I		HP-2001
Cavalier Z24	2.8L V6 F/I	E-0890	HP-1001
Celebrity	2.8L V6 F/I	E-0850	HP-2001
Corsica	2.8L V6 F/I	E-0930	HP-1001
Corvette	5.7L V8 F/I	33-2014	HP-2002
G20 Van	5.7L V8 F/I	E-1150	HP-3002
G30	5.7L V8 CARB	E-1420	HP-3002
G30	5.7L V8 F/I	E-1150	HP-3002
K1500	4.3L V6 F/I	E-1150	HP-2001
K1500	5.0L V8 F/I	E-1500 ♦	HP-2001
K1500	5.7L V8 F/I	E-1500 ♦	HP-2001
K1500	6.2L V8 DSL	E-1690	HP-3002
K2500	5.7L V8 F/I	E-1500 ♦	HP-2001
K2500	6.2L V8 DSL	E-1690	HP-3002
K3500	5.7L V8 F/I	E-1500 ♦	HP-2001
K3500	7.4L V8 F/I		HP-3002
K3500	7.4L V8 F/I - 3-7/16 in tall filter	E-1500 ♦	HP-3002
K3500	7.4L V8 F/I - 5-1/2 in tall filter	E-1420 ♦	HP-3002
Monte Carlo	4.3L V6 F/I	E-1450	HP-2001
Monte Carlo	5.0L V8 CARB	E-1500	HP-2002
Motorhome	7.4L V8 F/I - Class A & C, w/ 3-7/16 in Tall Filter	E-1500	
Motorhome	7.4L V8 F/I - Class A/C w/ 5-1/2 in Tall Filter	E-1420	
Nova	1.6L L4 CARB	E-2690	HP-1003

Vehicle	Engine Type	Air Filter	Oil Filter
1988 CHEVROLET			
Nova	1.6L L4 F/I	33-2533	HP-1003
P30	7.4L V8 CARB	E-1420	HP-3002
R10 Suburban	5.7L V8 F/I	E-1500 ♦	HP-3002
R20 Suburban	5.7L V8 F/I	E-1500 ♦	HP-3002
S10 Blazer	2.5L L4 F/I	E-1015	HP-1001
S10 Blazer	2.8L V6 F/I	E-1065	
S10 Blazer	2.8L V6 F/I - 2WD	E-1065	HP-2001
S10 Blazer	2.8L V6 F/I - 4WD	E-1065	HP-1001
S10 Blazer	4.3L V6 TBI	E-1065 ♦	HP-2001
S10 Pickup	2.5L L4 F/I	E-1015	HP-1001
S10 Pickup	2.8L V6 F/I	E-1065	
S10 Pickup	2.8L V6 F/I - 2WD	E-1065	HP-2001
S10 Pickup	2.8L V6 F/I - 4WD	E-1065	HP-1001
S10 Pickup	4.3L V6 TBI	E-1065 ♦	HP-2001
V10 Suburban	5.7L V8 F/I	E-1500 ♦	HP-3002
V20 Suburban	5.7L V8 F/I	E-1500 ♦	HP-3002
V30	7.4L V8 CARB		HP-3002
V30	7.4L V8 F/I		HP-3002
V30	7.4L V8 F/I - 3-7/16 in tall filter	E-1500 ♦	HP-3002
1987 CHEVROLET			
Beretta	2.8L V6 F/I	E-0930	HP-1001
Blazer	5.0L V8 F/I	E-1500	HP-3002
Blazer	5.7L V8 F/I	E-1500	HP-3002
Blazer	6.2L V8 DSL	E-1690	HP-3002
Camaro	2.8L V6 F/I	33-2008-1*	HP-1001
Camaro	5.0L V8 CARB	E-1450	HP-2002
Camaro	5.0L V8 F/I	33-2008-1*	HP-2002
Camaro	5.7L V8 F/I	33-2008-1*	HP-2002
Caprice	5.0L V8 CARB - VIN H	E-1500	HP-2002
Caprice	5.0L V8 CARB - VIN Y	E-1500	HP-2006
Caprice	5.7L V8 CARB	E-1500	
Caprice	5.7L V8 CARB - w/o oil cooler	E-1500	HP-3002
Caprice	5.7L V8 CARB - w/oil cooler	E-1500	HP-2002
Cavalier Z24	2.8L V6 F/I	E-0890	HP-1001
Celebrity	2.8L V6 F/I	E-0850	HP-2001
Chevette	1.6L L4 CARB	E-1030	HP-1001
Corvette	5.7L V8 F/I	33-2014	HP-2002
El Camino	4.3L V6 F/I	E-1450	HP-2001
El Camino	5.0L V8 CARB	E-1500	HP-2002
G20 Van	5.7L V8 F/I	E-1150	HP-3002
G30	5.7L V8 CARB	E-1150	HP-3002
G30	5.7L V8 F/I		HP-3002
Monte Carlo	3.8L V6 CARB		HP-1001
Monte Carlo	4.3L V6 F/I	E-1450	HP-2001
Monte Carlo	5.0L V8 CARB	E-1500	HP-2002
Motorhome	5.7L V8 F/I - Class A & C	E-1150	
Motorhome	5.7L V8 F/I - Class A, 1/4 inch taller than stock	E-3679	
Nova	1.6L L4 CARB	E-2690	HP-1003
P30	7.4L V8 CARB	E-1420	HP-3002
R10 Suburban	5.0L V8 F/I	E-1500	HP-3002
R10 Suburban	5.7L V8 F/I	E-1500	HP-3002
R10 Truck	4.3L V6 F/I	E-1150	HP-2001
R10 Truck	5.0L V8 F/I	E-1500	HP-3002
R10 Truck	5.7L V8 F/I	E-1500	HP-3002
R10 Truck	6.2L V8 DSL	E-1690	HP-3002
R20	5.7L V8 F/I	E-1500	HP-3002
R20	7.4L V8 F/I		HP-3002
R20	7.4L V8 F/I - 3-7/16 in tall filter	E-1500	HP-3002
R20 Suburban	5.7L V8 F/I	E-1500	HP-3002

*Indicates 2 filters required ♦ - Intake kit available - see page 80 Applications updated daily at knfilters.com

1987 CHEVROLET

Vehicle	Engine Type	Air Filter	Oil Filter
R20 Suburban	7.4L V8 F/I		HP-3002
R20 Suburban	7.4L V8 F/I - 3-7/16 in tall filter	E-1500	HP-3002
R20 Suburban	7.4L V8 F/I - 5-1/2 in tall filter	E-1420	HP-3002
R30	5.7L V8 CARB		HP-3002
R30	5.7L V8 F/I	E-1500	HP-3002
R30	7.4L V8 CARB		HP-3002
R30	7.4L V8 CARB - 3-7/16 in tall filter	E-1500	HP-3002
R30	7.4L V8 CARB - 5-1/2 in tall filter	E-1420	HP-3002
R30	7.4L V8 F/I		HP-3002
R30	7.4L V8 F/I - 3-7/16 in tall filter	E-1500	HP-3002
R30	7.4L V8 F/I - 5-1/2 in tall filter	E-1420	HP-3002
S10 Blazer	2.5L L4 F/I	E-1015	HP-1001
S10 Blazer	2.8L V6 F/I	E-1065	
S10 Blazer	2.8L V6 F/I - 2WD	E-1065	HP-2001
S10 Blazer	2.8L V6 F/I - 4WD	E-1065	HP-1001
S10 Pickup	2.5L L4 F/I	E-1015	HP-1001
S10 Pickup	2.8L V6 F/I	E-1065	
S10 Pickup	2.8L V6 F/I - 2WD	E-1065	HP-2001
S10 Pickup	2.8L V6 F/I - 4WD	E-1065	HP-1001
Sprint	1.0L L3 CARB		HP-1002
Sprint	1.0L L3 F/I		HP-1002
V10	5.0L V8 F/I	E-1500	HP-3002
V10	5.7L V8 F/I	E-1500	HP-3002
V10 Suburban	5.7L V8 F/I	E-1500	HP-3002
V10 Suburban	6.2L V8 DSL	E-1690	HP-3002
V20	5.7L V8 F/I	E-1500	HP-3002
V20 Suburban	5.7L V8 F/I	E-1500	HP-3002
V20 Suburban	7.4L V8 F/I		HP-3002
V20 Suburban	7.4L V8 F/I - 3-7/16 in tall filter	E-1500	HP-3002
V20 Suburban	7.4L V8 F/I - 5-1/2 in tall filter	E-1420	HP-3002
V30	7.4L V8 CARB		HP-3002
V30	7.4L V8 F/I		HP-3002
V30	7.4L V8 F/I - 3-7/16 in tall filter	E-1500	HP-3002
V30	7.4L V8 F/I - 5-1/2 in tall filter	E-1420	HP-3002

1986 CHEVROLET

Vehicle	Engine Type	Air Filter	Oil Filter
Astro	4.3L V6 F/I	E-1065	HP-2001
C10	4.3L V6 CARB	E-1150	HP-2001
C10	5.0L V8 CARB	E-1420	HP-3002
C10	5.7L V8 CARB	E-1420	HP-3002
C10	6.2L V8 DSL	E-1690	HP-3002
C10 Suburban	5.0L V8 CARB	E-1420	HP-3002
C10 Suburban	5.7L V8 CARB	E-1420	HP-3002
C10 Suburban	6.2L V8 DSL	E-1690	HP-3002
C20	5.7L V8 CARB	E-1420	HP-3002
C20	7.4L V8 CARB	E-1420	HP-3002
C20 Suburban	5.7L V8 CARB	E-1420	HP-3002
C20 Suburban	6.2L V8 DSL	E-1690	HP-3002
C20 Suburban	7.4L V8 CARB		HP-3002
C20 Suburban	7.4L V8 CARB - 3-7/16 in tall filter	E-1500	HP-3002
C20 Suburban	7.4L V8 CARB - 5-1/2 in tall filter	E-1420	HP-3002
C30 Truck	5.0L V8 CARB	E-1420	HP-3002
C30 Truck	5.7L V8 CARB	E-1420	HP-3002
C30 Truck	6.2L V8 DSL	E-1690	HP-3002
C30 Truck	7.4L V8 CARB	E-1420	HP-3002
Camaro	2.5L L4 F/I	E-1015	HP-1001
Camaro	2.8L V6 F/I	33-2008-1*	HP-1001

1986 CHEVROLET

Vehicle	Engine Type	Air Filter	Oil Filter
Camaro	5.0L V8 CARB	E-1450	HP-2002
Camaro	5.0L V8 F/I	33-2008-1*	HP-2002
Caprice	5.0L V8 CARB - VIN H	E-1500	HP-2002
Caprice	5.0L V8 CARB - VIN Y	E-1500	HP-2006
Caprice	5.7L V8 CARB	E-1500	HP-3002
Celebrity	2.8L V6 CARB	E-1950	HP-1001
Celebrity	2.8L V6 F/I	E-0850	HP-1001
Chevette	1.6L L4 CARB	E-1030	HP-1001
Corvette	5.7L V8 F/I	33-2014	HP-2002
El Camino	4.3L V6 F/I	E-1450	HP-2001
El Camino	5.0L V8 CARB	E-1500	HP-2002
G20 Van	5.0L V8 CARB	E-1150	HP-3002
G20 Van	5.7L V8 CARB	E-1150	HP-3002
G30	5.7L V8 CARB	E-1150	HP-3002
K5 Blazer	5.0L V8 CARB	E-1420	HP-3002
K5 Blazer	5.7L V8 CARB	E-1420	HP-3002
K5 Blazer	6.2L V8 DSL	E-1690	HP-3002
K10	4.3L V6 CARB	E-1500	HP-2001
K10	5.0L V8 CARB	E-1420	HP-3002
K10	5.7L V8 CARB	E-1420	HP-3002
K10	6.2L V8 DSL	E-1690	HP-3002
K10 Suburban	5.0L V8 CARB	E-1420	HP-3002
K10 Suburban	5.7L V8 CARB	E-1420	HP-3002
K10 Suburban	6.2L V8 DSL	E-1690	HP-3002
K20	4.8L L6 CARB	E-1120	HP-2002
K20	5.7L V8 CARB	E-1420	HP-3002
K20	6.2L V8 DSL	E-1690	HP-3002
K20 Suburban	5.0L V8 CARB	E-1420	HP-3002
K20 Suburban	5.7L V8 CARB	E-1420	HP-3002
K20 Suburban	6.2L V8 DSL	E-1690	HP-3002
K30	5.7L V8 CARB	E-1420	HP-3002
K30	6.2L V8 DSL	E-1690	HP-3002
K30	7.4L V8 CARB	E-1420	HP-3002
Monte Carlo	4.3L V6 F/I	E-1450	HP-2001
Monte Carlo	5.0L V8 CARB	E-1500	HP-2002
Nova	1.6L L4 CARB	E-2690	HP-1003
P30	7.4L V8 CARB	E-1420	HP-3002
S10 Blazer	2.8L V6 F/I	E-1065	
S10 Blazer	2.8L V6 F/I - 2WD	E-1065	HP-2001
S10 Blazer	2.8L V6 F/I - 4WD	E-1065	HP-1001
S10 Pickup	2.5L L4 F/I	E-1015	HP-1001
S10 Pickup	2.8L V6 F/I	E-1065	
S10 Pickup	2.8L V6 F/I - 2WD	E-1065	HP-2001
S10 Pickup	2.8L V6 F/I - 4WD	E-1065	HP-1001
Sprint	1.0L L3 CARB	E-2734	HP-1002

1985 CHEVROLET

Vehicle	Engine Type	Air Filter	Oil Filter
Astro	4.3L V6 CARB	E-1065	HP-2001
C10	4.3L V6 CARB	E-1500	HP-2001
C10	5.0L V8 CARB	E-1420	HP-3002
C10	5.7L V8 CARB		HP-3002
C10	5.7L V8 CARB - 3-7/16 in tall filter	E-1500	HP-3002
C10	5.7L V8 CARB - 5-1/2 in tall filter	E-1420	HP-3002
C10	6.2L V8 DSL	E-1690	HP-3002
C10 Suburban	5.0L V8 CARB	E-1420	HP-3002
C10 Suburban	5.7L V8 CARB	E-1420	HP-3002
C10 Suburban	6.2L V8 DSL	E-1690	HP-3002
C20	5.7L V8 CARB		HP-3002
C20	5.7L V8 CARB - 3-7/16 in tall filter	E-1500	HP-3002
C20	5.7L V8 CARB - 5-1/2 in tall filter	E-1420	HP-3002
C20	6.2L V8 DSL	E-1690	HP-3002
C20	7.4L V8 CARB		HP-3002

Vehicle	Engine Type	Air Filter	Oil Filter
1985 CHEVROLET			
C20	7.4L V8 CARB - 3-7/16 in tall filter	E-1500	HP-3002
C20	7.4L V8 CARB - 5-1/2 in tall filter	E-1420	HP-3002
C20 Suburban	5.7L V8 CARB	E-1420	HP-3002
C20 Suburban	6.2L V8 DSL	E-1690	HP-3002
C20 Suburban	7.4L V8 CARB		HP-3002
C20 Suburban	7.4L V8 CARB - 3-7/16 in tall filter	E-1500	HP-3002
C20 Suburban	7.4L V8 CARB - 5-1/2 in tall filter	E-1420	HP-3002
C30 Truck	5.7L V8 CARB		HP-3002
C30 Truck	5.7L V8 CARB - 3-7/16 in tall filter	E-1500	HP-3002
C30 Truck	5.7L V8 CARB - 5-1/2 in tall filter	E-1420	HP-3002
C30 Truck	7.4L V8 CARB		HP-3002
C30 Truck	7.4L V8 CARB - 3-7/16 in tall filter	E-1500	HP-3002
C30 Truck	7.4L V8 CARB - 5-1/2 in tall filter	E-1420	HP-3002
Camaro	2.8L V6 F/I	33-2008-1*	HP-1001
Camaro	5.0L V8 CARB	E-1450	HP-2002
Camaro	5.0L V8 F/I	33-2008-1*	HP-2002
Caprice	5.0L V8 CARB	E-1500	HP-2002
Caprice	5.7L V8 CARB	E-1500	HP-3002
Caprice	5.7L V8 DSL	E-1690	HP-2006
Celebrity	2.8L V6 CARB	E-1950	HP-1001
Celebrity	2.8L V6 F/I	E-0850	HP-1001
Corvette	5.7L V8 F/I	33-2014	HP-2002
El Camino	4.3L V6 F/I	E-1450	HP-2001
El Camino	5.0L V8 CARB	E-1500	HP-2002
Impala	5.7L V8 CARB	E-1500	HP-3002
Impala	5.7L V8 DSL	E-1690	HP-2006
K5 Blazer	5.0L V8 CARB	E-1420	HP-3002
K5 Blazer	5.7L V8 CARB	E-1420	HP-3002
K5 Blazer	6.2L V8 DSL	E-1690	HP-3002
K10	5.0L V8 CARB	E-1420	HP-3002
K10	5.7L V8 CARB		HP-3002
K10	5.7L V8 CARB - 3-7/16 in tall filter	E-1500	HP-3002
K10	5.7L V8 CARB - 5-1/2 in tall filter	E-1420	HP-3002
K10	6.2L V8 DSL	E-1690	HP-3002
K10 Suburban	5.0L V8 CARB	E-1420	HP-3002
K10 Suburban	5.7L V8 CARB	E-1420	HP-3002
K10 Suburban	6.2L V8 DSL	E-1690	HP-3002
K20	5.7L V8 CARB		HP-3002
K20	5.7L V8 CARB - 3-7/16 in tall filter	E-1500	HP-3002
K20	5.7L V8 CARB - 5-1/2 in tall filter	E-1420	HP-3002
K20	6.2L V8 DSL	E-1690	HP-3002
K20 Suburban	5.7L V8 CARB	E-1420	HP-3002
K20 Suburban	6.2L V8 DSL	E-1690	HP-3002
K20 Suburban	7.4L V8 CARB		HP-3002
K20 Suburban	7.4L V8 CARB - 3-7/16 in tall filter	E-1500	HP-3002
K20 Suburban	7.4L V8 CARB - 5-1/2 in tall filter	E-1420	HP-3002
K30	6.2L V8 DSL	E-1690	HP-3002
K30	7.4L V8 CARB		HP-3002
K30	7.4L V8 CARB - 3-7/16 in tall filter	E-1500	HP-3002
K30	7.4L V8 CARB - 5-1/2 in tall filter	E-1420	HP-3002
Monte Carlo	3.8L V6 CARB		HP-1001
Monte Carlo	4.3L V6 F/I	E-1450	HP-2001
Monte Carlo	5.0L V8 CARB	E-1500	HP-2002

Vehicle	Engine Type	Air Filter	Oil Filter
1985 CHEVROLET			
Motorhome	7.4L V8 4 BBL. - Class A & C, w/ 3-7/16 in Tall Filter	E-1500	
Motorhome	7.4L V8 4 BBL. - Class A & C, w/ 5-1/2 in Tall Filter	E-1420	
P30	7.4L V8 CARB	E-1420	HP-3002
S10 Blazer	2.5L L4 F/I	E-1015	HP-1001
S10 Blazer	2.8L V6 CARB	E-1035	
S10 Blazer	2.8L V6 CARB - 2WD	E-1035	HP-2001
S10 Blazer	2.8L V6 CARB - 4WD	E-1035	HP-1001
S10 Pickup	2.5L L4 F/I	E-1015	HP-1001
S10 Pickup	2.8L V6 CARB	E-1035	
S10 Pickup	2.8L V6 CARB - 2WD	E-1035	HP-2001
S10 Pickup	2.8L V6 CARB - 4WD	E-1035	HP-1001
Sprint	1.0L L3 CARB	E-2734	HP-1002
1984 CHEVROLET			
C10	4.1L L6 CARB	E-1030	HP-2002
C10	5.0L V8 CARB	E-1420	HP-3002
C10	5.7L V8 CARB		HP-3002
C10	5.7L V8 CARB - 3-7/16 in tall filter	E-1500	HP-3002
C10	5.7L V8 CARB - 5-1/2 in tall filter	E-1420	HP-3002
C10	6.2L V8 DSL	E-1690	HP-3002
C10 Suburban	5.0L V8 CARB	E-1420	HP-3002
C10 Suburban	5.7L V8 CARB	E-1420	HP-3002
C10 Suburban	6.2L V8 DSL	E-1690	HP-3002
C20	5.7L V8 CARB		HP-3002
C20	5.7L V8 CARB - 3-7/16 in tall filter	E-1500	HP-3002
C20	5.7L V8 CARB - 5-1/2 in tall filter	E-1420	HP-3002
C20	6.2L V8 DSL	E-1690	HP-3002
C20 Suburban	5.7L V8 CARB	E-1420	HP-3002
C20 Suburban	6.2L V8 DSL	E-1690	HP-3002
C20 Suburban	7.4L V8 CARB		HP-3002
C20 Suburban	7.4L V8 CARB - 3-7/16 in tall filter	E-1500	HP-3002
C20 Suburban	7.4L V8 CARB - 5-1/2 in tall filter	E-1420	HP-3002
C30 Truck	5.7L V8 CARB		HP-3002
C30 Truck	5.7L V8 CARB - 3-7/16 in tall filter	E-1500	HP-3002
C30 Truck	5.7L V8 CARB - 5-1/2 in tall filter	E-1420	HP-3002
C30 Truck	7.4L V8 CARB		HP-3002
C30 Truck	7.4L V8 CARB - 3-7/16 in tall filter	E-1500	HP-3002
C30 Truck	7.4L V8 CARB - 5-1/2 in tall filter	E-1420	HP-3002
Camaro	2.8L V6 CARB	E-1030	HP-1001
Camaro	5.0L V8 CARB	E-1450	HP-2002
Caprice	3.8L V6 CARB - VIN 9	E-1065	HP-2001
Caprice	3.8L V6 CARB - VIN A	E-1150	HP-1001
Caprice	5.0L V8 CARB	E-1500	HP-2002
Caprice	5.7L V8 DSL	E-1690	HP-2006
Chevette	1.6L L4 CARB	E-1030	HP-1001
Corvette	5.7L V8 F/I	E-1984	HP-2002
El Camino	3.8L V6 CARB - VIN A	E-1150	HP-1001
El Camino	5.0L V8 CARB	E-1500	HP-2002
El Camino	5.7L V8 DSL	E-1690	HP-2006
G20 Van	5.0L V8 CARB	E-1150	HP-3002
G30	5.7L V8 CARB	E-1150	HP-3002
K5 Blazer	5.0L V8 CARB	E-1420	HP-3002
K5 Blazer	5.7L V8 CARB	E-1420	HP-3002
K5 Blazer	6.2L V8 DSL	E-1690	HP-3002
K10	5.0L V8 CARB	E-1420	HP-3002
K10	5.7L V8 CARB		HP-3002

*Indicates 2 filters required ♦ - Intake kit available - see page 80 Applications updated daily at knfilters.com

1984 CHEVROLET

Vehicle	Engine Type	Air Filter	Oil Filter
K10	5.7L V8 CARB - 3-7/16 in tall filter	E-1500	HP-3002
K10	5.7L V8 CARB - 5-1/2 in tall filter	E-1420	HP-3002
K10	6.2L V8 DSL	E-1690	HP-3002
K10 Suburban	5.0L V8 CARB	E-1420	HP-3002
K10 Suburban	5.7L V8 CARB	E-1420	HP-3002
K10 Suburban	6.2L V8 DSL	E-1690	HP-3002
K20	5.7L V8 CARB		HP-3002
K20	5.7L V8 CARB - 3-7/16 in tall filter	E-1500	HP-3002
K20	5.7L V8 CARB - 5-1/2 in tall filter	E-1420	HP-3002
K20	6.2L V8 DSL	E-1690	HP-3002
K20 Suburban	5.7L V8 CARB	E-1420	HP-3002
K20 Suburban	6.2L V8 DSL	E-1690	HP-3002
K30	6.2L V8 DSL	E-1690	HP-3002
K30	7.4L V8 CARB		HP-3002
K30	7.4L V8 CARB - 3-7/16 in tall filter	E-1500	HP-3002
K30	7.4L V8 CARB - 5-1/2 in tall filter	E-1420	HP-3002
Monte Carlo	3.8L V6 CARB - VIN 9	E-1065	HP-2001
Monte Carlo	3.8L V6 CARB - VIN A	E-1150	HP-1001
Monte Carlo	5.0L V8 CARB	E-1500	HP-2002
Monte Carlo	5.7L V8 DSL	E-1690	HP-2006
P30	7.4L V8 CARB		HP-3002
S10 Blazer	2.8L V6 CARB	E-1035	
S10 Blazer	2.8L V6 CARB - 2WD	E-1035	HP-2001
S10 Blazer	2.8L V6 CARB - 4WD	E-1035	HP-1001
S10 Pickup	2.8L V6 CARB	E-1035	
S10 Pickup	2.8L V6 CARB - 2WD	E-1035	HP-2001
S10 Pickup	2.8L V6 CARB - 4WD	E-1035	HP-1001

1983 CHEVROLET

Vehicle	Engine Type	Air Filter	Oil Filter
C10	4.1L L6 CARB	E-1030	HP-2002
C10	5.0L V8 CARB	E-1420	HP-3002
C10	5.7L V8 CARB - 2qt. spin on		HP-6002
C10	5.7L V8 CARB - 3-7/16 in tall filter	E-1500	
C10	5.7L V8 CARB - 5-1/2 in tall filter	E-1420	
C10	5.7L V8 CARB - w/o 2qt. spin on		HP-3002
C10	6.2L V8 DSL	E-1690	HP-3002
C10 Suburban	5.0L V8 CARB	E-1420	HP-3002
C10 Suburban	5.7L V8 CARB	E-1420	
C10 Suburban	5.7L V8 CARB - 2qt. spin on	E-1420	HP-6002
C10 Suburban	5.7L V8 CARB - w/o 2qt. spin on	E-1420	HP-3002
C10 Suburban	6.2L V8 DSL	E-1690	HP-3002
C20	5.7L V8 CARB - 2qt. spin on		HP-6002
C20	5.7L V8 CARB - 3-7/16 in tall filter	E-1500	
C20	5.7L V8 CARB - 5-1/2 in tall filter	E-1420	
C20	5.7L V8 CARB - w/o 2qt. spin on		HP-3002
C20 Suburban	5.7L V8 CARB	E-1420	
C20 Suburban	5.7L V8 CARB - 2qt. spin on	E-1420	HP-6002
C20 Suburban	5.7L V8 CARB - w/o 2qt. spin on	E-1420	HP-3002
C20 Suburban	6.2L V8 DSL	E-1690	HP-3002
C30 Truck	5.7L V8 CARB - 3-7/16 in tall filter	E-1500	
C30 Truck	5.7L V8 CARB - 5-1/2 in tall filter	E-1420	
C30 Truck	5.7L V8 CARB - w/o 2qt. spin on		HP-3002

1983 CHEVROLET

Vehicle	Engine Type	Air Filter	Oil Filter
Camaro	2.5L L4 CARB	E-1940	HP-1001
Camaro	2.5L L4 F/I	E-1015	HP-1001
Camaro	2.8L V6 CARB	E-1030	HP-1001
Camaro	5.0L V8 CARB	E-1450	HP-2002
Camaro	5.0L V8 F/I	E-1117*	HP-2002
Caprice	5.0L V8 CARB	E-1500	HP-2002
Citation	2.8L V6 CARB - VIN X	E-1950	HP-2001
Citation	2.8L V6 CARB - VIN Z	E-1955	HP-2001
El Camino	3.8L V6 CARB - VIN 9	E-1065	HP-2001
El Camino	3.8L V6 CARB - VIN A	E-1150	HP-1001
El Camino	5.0L V8 CARB	E-1500	HP-2002
El Camino	5.7L V8 DSL	E-1690	HP-2006
G30	5.7L V8 CARB	E-1150	
G30	5.7L V8 CARB - w/o 2qt. spin on	E-1150	HP-3002
Impala	5.7L V8 CARB	E-1500	HP-3002
Impala	5.7L V8 DSL	E-1690	HP-2006
K5 Blazer	5.7L V8 CARB		HP-3002
K5 Blazer	5.7L V8 CARB - 3-7/16 in tall filter	E-1500	HP-3002
K5 Blazer	5.7L V8 CARB - 5-1/2 in tall filter	E-1420	HP-3002
K5 Blazer	6.2L V8 DSL	E-1690	HP-3002
K10	5.0L V8 CARB	E-1420	HP-3002
K10	5.7L V8 CARB - 2qt. spin on		HP-6002
K10	5.7L V8 CARB - 3-7/16 in tall filter	E-1500	
K10	5.7L V8 CARB - 5-1/2 in tall filter	E-1420	
K10	5.7L V8 CARB - w/o 2qt. spin on		HP-3002
K10	6.2L V8 DSL	E-1690	HP-3002
K10 Suburban	5.0L V8 CARB	E-1420	HP-3002
K10 Suburban	5.7L V8 CARB	E-1420	
K10 Suburban	5.7L V8 CARB - 2qt. spin on	E-1420	HP-6002
K10 Suburban	5.7L V8 CARB - w/o 2qt. spin on	E-1420	HP-3002
K10 Suburban	6.2L V8 DSL	E-1690	HP-3002
K20	5.7L V8 CARB - 2qt. spin on		HP-6002
K20	5.7L V8 CARB - 3-7/16 in tall filter	E-1500	
K20	5.7L V8 CARB - 5-1/2 in tall filter	E-1420	
K20	5.7L V8 CARB - w/o 2qt. spin on		HP-3002
K20	6.2L V8 DSL	E-1690	HP-3002
K20 Suburban	5.7L V8 CARB	E-1420	HP-3002
K20 Suburban	6.2L V8 DSL	E-1690	HP-3002
Malibu	3.8L V6 CARB - VIN A	E-1150	HP-1001
Malibu	5.7L V8 DSL	E-1690	HP-2006
Monte Carlo	5.0L V8 CARB	E-1500	HP-2002
Monte Carlo	5.7L V8 DSL	E-1690	HP-2006
Motorhome	5.7L V8 4 BBL. - Class A & C	E-1150	
Motorhome	5.7L V8 4 BBL. - Class A, 1/4 inch taller than stock	E-3679	
S10 Pickup	2.8L V6 CARB	E-1035	
S10 Pickup	2.8L V6 CARB - 2WD	E-1035	HP-2001
S10 Pickup	2.8L V6 CARB - 4WD	E-1035	HP-1001

1982 CHEVROLET

Vehicle	Engine Type	Air Filter	Oil Filter
C10	4.1L L6 CARB	E-1030	HP-2002
C10	5.0L V8 CARB	E-1150	HP-3002
C10	5.7L V8 CARB	E-1420	
C10	5.7L V8 CARB - 2qt. spin on	E-1420	HP-6002
C10	5.7L V8 CARB - w/o 2qt. spin on	E-1420	HP-3002

Vehicle	Engine Type	Air Filter	Oil Filter
1982 CHEVROLET			
C10	6.2L V8 DSL	E-1690	HP-3002
C10 Suburban	5.0L V8 CARB	E-1420	HP-3002
C10 Suburban	5.7L V8 CARB	E-1420	
C10 Suburban	5.7L V8 CARB - 2qt. spin on	E-1420	HP-6002
C10 Suburban	5.7L V8 CARB - w/o 2qt. spin on	E-1420	HP-3002
C10 Suburban	6.2L V8 DSL	E-1690	HP-3002
C20	5.7L V8 CARB	E-1420	
C20	5.7L V8 CARB - 2qt. spin on	E-1420	HP-6002
C20	5.7L V8 CARB - w/o 2qt. spin on	E-1420	HP-3002
C20	6.2L V8 DSL	E-1690	HP-3002
C20	7.4L V8 CARB	E-1320	HP-3002
C20 Suburban	5.7L V8 CARB	E-1420	
C20 Suburban	5.7L V8 CARB - 2qt. spin on	E-1420	HP-6002
C20 Suburban	5.7L V8 CARB - w/o 2qt. spin on	E-1420	HP-3002
C20 Suburban	6.2L V8 DSL	E-1690	HP-3002
C20 Suburban	7.4L V8 CARB		HP-3002
C20 Suburban	7.4L V8 CARB - 3-7/16 in tall filter	E-1500	HP-3002
C20 Suburban	7.4L V8 CARB - 5-1/2 in tall filter	E-1420	HP-3002
C30 Truck	5.7L V8 CARB	E-1420	
C30 Truck	5.7L V8 CARB - 2qt. spin on	E-1420	HP-6002
C30 Truck	5.7L V8 CARB - w/o 2qt. spin on	E-1420	HP-3002
Camaro	2.8L V6 CARB	E-1030	HP-2001
Camaro	5.0L V8 CARB	E-1450	HP-2002
Camaro	5.0L V8 F/I	E-1117*	HP-2002
Corvette	5.7L V8 F/I	E-1117*	HP-2002
El Camino	3.8L V6 CARB - VIN A	E-1150	HP-1001
El Camino	3.8L V6 CARB - VIN K	E-1065	HP-2001
El Camino	4.4L V8 CARB	E-1065	HP-2002
El Camino	5.0L V8 CARB	E-1500	HP-2002
K5 Blazer	5.7L V8 CARB	E-1420	
K5 Blazer	5.7L V8 CARB - 2qt. spin on	E-1420	HP-6002
K5 Blazer	5.7L V8 CARB - w/o 2qt. spin on	E-1420	HP-3002
K5 Blazer	6.2L V8 DSL	E-1690	HP-3002
K10	5.0L V8 CARB	E-1150	HP-3002
K10	5.7L V8 CARB	E-1420	
K10	5.7L V8 CARB - 2qt. spin on	E-1420	HP-6002
K10	5.7L V8 CARB - w/o 2qt. spin on	E-1420	HP-3002
K10	6.2L V8 DSL	E-1690	HP-3002
K10 Suburban	5.0L V8 CARB	E-1420	HP-3002
K10 Suburban	5.7L V8 CARB	E-1420	
K10 Suburban	5.7L V8 CARB - 2qt. spin on	E-1420	HP-6002
K10 Suburban	5.7L V8 CARB - w/o 2qt. spin on	E-1420	HP-3002
K10 Suburban	6.2L V8 DSL	E-1690	HP-3002
K20	5.7L V8 CARB	E-1420	
K20	5.7L V8 CARB - 2qt. spin on	E-1420	HP-6002
K20	5.7L V8 CARB - w/o 2qt. spin on	E-1420	HP-3002
K20	6.2L V8 DSL	E-1690	HP-3002
K20 Suburban	5.7L V8 CARB	E-1420	
K20 Suburban	5.7L V8 CARB - 2qt. spin on	E-1420	HP-6002
K20 Suburban	5.7L V8 CARB - w/o 2qt. spin on	E-1420	HP-3002
K20 Suburban	6.2L V8 DSL	E-1690	HP-3002
K30	7.4L V8 CARB	E-1320	HP-3002

Vehicle	Engine Type	Air Filter	Oil Filter
1982 CHEVROLET			
Monte Carlo	3.8L V6 CARB - VIN A	E-1150	HP-1001
Monte Carlo	3.8L V6 CARB - VIN K	E-1065	HP-2001
Monte Carlo	4.4L V8 CARB	E-1065	HP-2002
Monte Carlo	5.0L V8 CARB	E-1500	HP-2002
Monte Carlo	5.7L V8 DSL	E-1690	HP-2006
S10 Pickup	1.9L L4 CARB	E-2760	HP-1005
S10 Pickup	2.8L V6 CARB	E-1035	HP-2001
1981 CHEVROLET			
C10	4.1L L6 CARB	E-1030	HP-2002
C10	5.0L V8 2 BBL.	E-1150	HP-3002
C10	5.0L V8 4 BBL.	E-1420	HP-3002
C10	5.7L V8 CARB	E-1420	
C10	5.7L V8 CARB - 2qt. spin on	E-1420	HP-6002
C10	5.7L V8 CARB - w/o 2qt. spin on	E-1420	HP-3002
C10	5.7L V8 DSL	E-1690	HP-2006
C10 Suburban	5.0L V8 2 BBL.	E-1150	HP-3002
C10 Suburban	5.0L V8 4 BBL.	E-1420	HP-3002
C10 Suburban	5.7L V8 CARB	E-1420	
C10 Suburban	5.7L V8 CARB - 2qt. spin on	E-1420	HP-6002
C10 Suburban	5.7L V8 CARB - w/o 2qt. spin on	E-1420	HP-3002
C20	5.7L V8 CARB - w/o 2qt. spin on		HP-3002
C20 Suburban	5.7L V8 CARB - w/o 2qt. spin on		HP-3002
C30 Truck	5.7L V8 CARB	E-1420	
C30 Truck	5.7L V8 CARB - 2qt. spin on	E-1420	HP-6002
C30 Truck	5.7L V8 CARB - w/o 2qt. spin on	E-1420	HP-3002
C30 Truck	7.4L V8 CARB	E-1320	
C30 Truck	7.4L V8 CARB - 2qt. spin on	E-1320	HP-6002
C30 Truck	7.4L V8 CARB - w/o 2qt. spin on	E-1320	HP-3002
Camaro	3.8L V6 CARB - VIN A	E-1450	HP-1001
Camaro	3.8L V6 CARB - VIN K	E-1065	HP-2001
Camaro	4.4L V8 CARB	E-1065	HP-2002
Camaro	5.0L V8 CARB	E-1500	HP-2002
Camaro	5.7L V8 CARB	E-1500	HP-2002
Corvette	5.7L V8 CARB	E-1500	HP-2002
El Camino	3.8L V6 CARB - VIN A	E-1150	HP-1001
El Camino	3.8L V6 CARB - VIN K	E-1065	HP-2001
El Camino	5.0L V8 CARB	E-1500	HP-2002
G20 Van	5.0L V8 2 BBL.	E-1150	HP-3002
K5 Blazer	5.0L V8 2 BBL.	E-1150	HP-3002
K5 Blazer	5.0L V8 4 BBL.	E-1500	HP-3002
K10	5.0L V8 CARB	E-1420	HP-3002
K10	5.7L V8 CARB	E-1420	
K10	5.7L V8 CARB - 2qt. spin on	E-1420	HP-6002
K10	5.7L V8 CARB - w/o 2qt. spin on	E-1420	HP-3002
K10 Suburban	5.0L V8 2 BBL.	E-1150	HP-3002
K10 Suburban	5.0L V8 4 BBL.	E-1500	HP-3002
K10 Suburban	5.7L V8 CARB	E-1420	
K10 Suburban	5.7L V8 CARB - 2qt. spin on	E-1420	HP-6002
K10 Suburban	5.7L V8 CARB - w/o 2qt. spin on	E-1420	HP-3002
K20	5.7L V8 CARB	E-1420	
K20	5.7L V8 CARB - 2qt. spin on	E-1420	HP-6002
K20	5.7L V8 CARB - w/o 2qt. spin on	E-1420	HP-3002
K20 Suburban	5.7L V8 CARB	E-1420	
K20 Suburban	5.7L V8 CARB - 2qt. spin on	E-1420	HP-6002

*Indicates 2 filters required ♦ - Intake kit available - see page 80 Applications updated daily at knfilters.com

Vehicle	Engine Type	Air Filter	Oil Filter
1981 CHEVROLET			
K20 Suburban	5.7L V8 CARB - w/o 2qt. spin on	E-1420	HP-3002
Malibu	5.7L V8 CARB	E-1500	HP-2002
1980 CHEVROLET			
C10	250 L6 CARB	E-1030	HP-2002
C10	305 V8 CARB	E-1150	HP-3002
C10	350 V8 2 BBL.	E-1150	HP-3002
C10	350 V8 4 BBL. - 2qt. spin on		HP-6002
C10	350 V8 4 BBL. - 3-7/16 in tall filter	E-1500	
C10	350 V8 4 BBL. - 5-1/2 in tall filter	E-1420	
C10	350 V8 4 BBL. - w/o 2qt. spin on		HP-3002
C10	350 V8 DSL	E-1690	HP-2006
C10	400 V8 CARB		HP-3002
C10	454 V8 CARB - w/o 2qt. spin on		HP-3002
C10 Suburban	250 L6 CARB	E-1030	HP-2002
C10 Suburban	305 V8 CARB	E-1150	HP-3002
C10 Suburban	350 V8 CARB - 2qt. spin on		HP-6002
C10 Suburban	350 V8 CARB - 3-7/16 in tall filter	E-1500	
C10 Suburban	350 V8 CARB - 5-1/2 in tall filter	E-1420	
C10 Suburban	350 V8 CARB - w/o 2qt. spin on		HP-3002
C10 Suburban	350 V8 DSL	E-1690	HP-2006
C10 Suburban	454 V8 CARB - 3-7/16 in tall filter	E-1500	
C10 Suburban	454 V8 CARB - w/o 2qt. spin on		HP-3002
C20	350 V8 2 BBL.	E-1150	HP-3002
C20	350 V8 4 BBL. - 2qt. spin on		HP-6002
C20	350 V8 4 BBL. - 3-7/16 in tall filter	E-1500	
C20	350 V8 4 BBL. - 5-1/2 in tall filter	E-1420	
C20	350 V8 4 BBL. - w/o 2qt. spin on		HP-3002
C20	454 V8 CARB - 2qt. spin on		HP-6002
C20	454 V8 CARB - 3-7/16 in tall filter	E-1500	
C20	454 V8 CARB - 5-1/2 in tall filter	E-1420	
C20	454 V8 CARB - w/o 2qt. spin on		HP-3002
C20 Suburban	350 V8 CARB - 2qt. spin on		HP-6002
C20 Suburban	350 V8 CARB - 3-7/16 in tall filter	E-1500	
C20 Suburban	350 V8 CARB - 5-1/2 in tall filter	E-1420	
C20 Suburban	350 V8 CARB - w/o 2qt. spin on		HP-3002
C20 Suburban	454 V8 CARB - 2qt. spin on		HP-6002
C20 Suburban	454 V8 CARB - 3-7/16 in tall filter	E-1500	
C20 Suburban	454 V8 CARB - 5-1/2 in tall filter	E-1420	
C20 Suburban	454 V8 CARB - w/o 2qt. spin on		HP-3002
C30 Truck	454 V8 CARB - 2qt. spin on		HP-6002
C30 Truck	454 V8 CARB - 3-7/16 in tall filter	E-1500	
C30 Truck	454 V8 CARB - 5-1/2 in tall filter	E-1420	
C30 Truck	454 V8 CARB - w/o 2qt. spin on		HP-3002
Camaro	229 V6 CARB	E-1070	HP-1001
Camaro	305 V8 CARB	E-1500	HP-2002

Vehicle	Engine Type	Air Filter	Oil Filter
1980 CHEVROLET			
Camaro	350 V8 CARB	E-1500	HP-2002
Chevette	98 L4 CARB	E-1030	HP-1001
Citation	173 V6 CARB	E-1950	HP-2001
Corvette	305 V8 CARB	E-1500	HP-2002
Corvette	350 V8 CARB	E-1500	HP-2002
El Camino	305 V8 CARB	E-1500	HP-2002
G20 Van	350 V8 CARB	E-1150	
Impala	350 V8 CARB		HP-2002
Impala	350 V8 DSL	E-1690	HP-2006
K5 Blazer	305 V8 CARB	E-1150	HP-3002
K5 Blazer	350 V8 CARB - 2qt. spin on		HP-6002
K5 Blazer	350 V8 CARB - 3-7/16 in tall filter	E-1500	
K5 Blazer	350 V8 CARB - 5-1/2 in tall filter	E-1420	
K5 Blazer	350 V8 CARB - w/o 2qt. spin on		HP-3002
K10	350 V8 CARB - 2qt. spin on		HP-6002
K10	350 V8 CARB - 3-7/16 in tall filter	E-1500	
K10	350 V8 CARB - 5-1/2 in tall filter	E-1420	
K10	350 V8 CARB - w/o 2qt. spin on		HP-3002
K10	454 V8 CARB - 2qt. spin on		HP-6002
K10	454 V8 CARB - 3-7/16 in tall filter	E-1500	
K10	454 V8 CARB - 5-1/2 in tall filter	E-1420	
K10	454 V8 CARB - w/o 2qt. spin on		HP-3002
K10 Suburban	350 V8 CARB - 2qt. spin on		HP-6002
K10 Suburban	350 V8 CARB - 3-7/16 in tall filter	E-1500	
K10 Suburban	350 V8 CARB - 5-1/2 in tall filter	E-1420	
K10 Suburban	350 V8 CARB - w/o 2qt. spin on		HP-3002
K20	350 V8 CARB - 2qt. spin on		HP-6002
K20	350 V8 CARB - 3-7/16 in tall filter	E-1500	
K20	350 V8 CARB - 5-1/2 in tall filter	E-1420	
K20	350 V8 CARB - w/o 2qt. spin on		HP-3002
K20	454 V8 CARB - 3-7/16 in tall filter	E-1500	
K20	454 V8 CARB - w/o 2qt. spin on		HP-3002
K20 Suburban	350 V8 2 BBL.	E-1150	HP-3002
K20 Suburban	350 V8 4 BBL. - 2qt. spin on		HP-6002
K20 Suburban	350 V8 4 BBL. - 3-7/16 in tall filter	E-1500	
K20 Suburban	350 V8 4 BBL. - 5-1/2 in tall filter	E-1420	
K20 Suburban	350 V8 4 BBL. - w/o 2qt. spin on		HP-3002
Luv	1.8L L4 CARB	E-2760	HP-1005
Malibu	231 V6 CARB	E-1150	HP-1001
Malibu	305 V8 CARB	E-1500	HP-2002
Malibu	350 V8 CARB	E-1500	HP-2002
Monte Carlo	305 V8 CARB	E-1500	HP-2002
Monza	151 L4 CARB	E-1940	HP-1001
1979 CHEVROLET			
C10	250 L6 CARB	E-1030	HP-2002
C10	305 V8 CARB	E-1150	HP-3002
C10	350 V8 CARB	E-1450	
C10	350 V8 CARB - 2qt. spin on	E-1450	HP-6002

Vehicle	Engine Type	Air Filter	Oil Filter
1979 CHEVROLET			
C10	350 V8 CARB - w/o 2qt. spin on	E-1450	HP-3002
C10	350 V8 DSL	E-1690	HP-2006
C10	400 V8 CARB	E-1500	
C10	400 V8 CARB - w/o 2qt. spin on	E-1500	HP-3002
C10	454 V8 CARB	E-1500	
C10	454 V8 CARB - 2qt. spin on	E-1500	HP-6002
C10	454 V8 CARB - w/o 2qt. spin on	E-1500	HP-3002
C10 Suburban	250 L6 CARB	E-1030	HP-2002
C10 Suburban	305 V8 CARB	E-1150	HP-3002
C10 Suburban	350 V8 CARB	E-1450	
C10 Suburban	350 V8 CARB - 2qt. spin on	E-1450	HP-6002
C10 Suburban	350 V8 CARB - w/o 2qt. spin on	E-1450	HP-3002
C10 Suburban	350 V8 DSL	E-1690	HP-2006
C10 Suburban	454 V8 CARB	E-1500	
C10 Suburban	454 V8 CARB - 2qt. spin on	E-1500	HP-6002
C10 Suburban	454 V8 CARB - w/o 2qt. spin on	E-1500	HP-3002
C20	350 V8 CARB	E-1450	
C20	350 V8 CARB - 2qt. spin on	E-1450	HP-6002
C20	350 V8 CARB - w/o 2qt. spin on	E-1450	HP-3002
C20	454 V8 CARB	E-1500	
C20	454 V8 CARB - 2qt. spin on	E-1500	HP-6002
C20	454 V8 CARB - w/o 2qt. spin on	E-1500	HP-3002
C20 Suburban	350 V8 CARB	E-1450	
C20 Suburban	350 V8 CARB - 2qt. spin on	E-1450	HP-6002
C20 Suburban	350 V8 CARB - w/o 2qt. spin on	E-1450	HP-3002
C20 Suburban	400 V8 CARB	E-1500	
C20 Suburban	400 V8 CARB - w/o 2qt. spin on	E-1500	HP-3002
C20 Suburban	454 V8 CARB	E-1500	
C20 Suburban	454 V8 CARB - 2qt. spin on	E-1500	HP-6002
C20 Suburban	454 V8 CARB - w/o 2qt. spin on	E-1500	HP-3002
C30 Truck	350 V8 CARB	E-1450	
C30 Truck	350 V8 CARB - 2qt. spin on	E-1450	HP-6002
C30 Truck	350 V8 CARB - w/o 2qt. spin on	E-1450	HP-3002
C30 Truck	454 V8 CARB	E-1500	
C30 Truck	454 V8 CARB - 2qt. spin on	E-1500	HP-6002
C30 Truck	454 V8 CARB - w/o 2qt. spin on	E-1500	HP-3002
Camaro	305 V8 CARB	E-1070	HP-2002
Camaro	350 V8 CARB	E-1500	HP-2002
Caprice	305 V8 CARB	E-1500	HP-2002
Caprice	350 V8 CARB	E-1500	HP-2002
Chevette	98 L4 CARB	E-1030	HP-1001
Corvette	350 V8 CARB	E-1500	HP-2002
El Camino	305 V8 CARB	E-1500	HP-2002
El Camino	350 V8 CARB	E-1500	HP-2002
Impala	305 V8 CARB		HP-2002
K5 Blazer	350 V8 CARB	E-1500	
K5 Blazer	350 V8 CARB - 2qt. spin on	E-1500	HP-6002
K5 Blazer	350 V8 CARB - w/o 2qt. spin on	E-1500	HP-3002
K10	350 V8 CARB	E-1450	
K10	350 V8 CARB - 2qt. spin on	E-1450	HP-6002

Vehicle	Engine Type	Air Filter	Oil Filter
1979 CHEVROLET			
K10	350 V8 CARB - w/o 2qt. spin on	E-1450	HP-3002
K10	400 V8 CARB	E-1500	
K10	400 V8 CARB - w/o 2qt. spin on	E-1500	HP-3002
K10 Suburban	350 V8 CARB	E-1450	
K10 Suburban	350 V8 CARB - 2qt. spin on	E-1450	HP-6002
K10 Suburban	350 V8 CARB - w/o 2qt. spin on	E-1450	HP-3002
K10 Suburban	400 V8 CARB	E-1500	
K10 Suburban	400 V8 CARB - 2qt. spin on	E-1500	HP-6002
K10 Suburban	400 V8 CARB - w/o 2qt. spin on	E-1500	HP-3002
K20	350 V8 CARB	E-1450	
K20	350 V8 CARB - 2qt. spin on	E-1450	HP-6002
K20	350 V8 CARB - w/o 2qt. spin on	E-1450	HP-3002
K20	400 V8 CARB	E-1500	
K20	400 V8 CARB - 2qt. spin on	E-1500	HP-6002
K20	400 V8 CARB - w/o 2qt. spin on	E-1500	HP-3002
K20 Suburban	350 V8 CARB	E-1500	
K20 Suburban	350 V8 CARB - 2qt. spin on	E-1500	HP-6002
K20 Suburban	350 V8 CARB - w/o 2qt. spin on	E-1500	HP-3002
K20 Suburban	400 V8 CARB	E-1500	
K20 Suburban	400 V8 CARB - 2qt. spin on	E-1500	HP-6002
K20 Suburban	400 V8 CARB - w/o 2qt. spin on	E-1500	HP-3002
Malibu	305 V8 CARB	E-1500	HP-2002
Malibu	350 V8 CARB	E-1500	HP-2002
Monte Carlo	305 V8 CARB	E-1500	HP-2002
Monza	305 V8 CARB	E-1070	HP-2002
Nova	350 V8 CARB	E-1500	HP-2002
1978 CHEVROLET			
C10	250 L6 CARB		HP-2002
C10	250 L6 CARB - w/o pwr. brakes	E-1070	HP-2002
C10	250 L6 CARB - w/pwr. brakes	E-1120	HP-2002
C10	305 V8 CARB	E-1450	HP-3002
C10	350 V8 CARB	E-1450	
C10	350 V8 CARB - 2qt. spin on	E-1450	HP-6002
C10	350 V8 CARB - w/o 2qt. spin on	E-1450	HP-3002
C10	350 V8 DSL	E-1690	HP-2003
C10	400 V8 CARB	E-1500	HP-3002
C10	454 V8 CARB	E-1500	
C10	454 V8 CARB - 2qt. spin on	E-1500	HP-6002
C10	454 V8 CARB - w/o 2qt. spin on	E-1500	HP-3002
C10 Suburban	250 L6 CARB		HP-2002
C10 Suburban	250 L6 CARB - w/ 2 in Tall Filter	E-1070	HP-2002
C10 Suburban	250 L6 CARB - w/ 3 in Tall Filter	E-1120	HP-2002
C10 Suburban	305 V8 CARB	E-1450	HP-3002
C10 Suburban	350 V8 CARB	E-1500	
C10 Suburban	350 V8 CARB - 2qt. spin on	E-1500	HP-6002
C10 Suburban	350 V8 CARB - w/o 2qt. spin on	E-1500	HP-3002
C10 Suburban	350 V8 DSL	E-1690	HP-2003
C10 Suburban	454 V8 CARB	E-1500	
C10 Suburban	454 V8 CARB - 2qt. spin on	E-1500	HP-6002

*Indicates 2 filters required ♦ - Intake kit available - see page 80 Applications updated daily at knfilters.com

1978 CHEVROLET

Vehicle	Engine Type	Air Filter	Oil Filter
C10 Suburban	454 V8 CARB - w/o 2qt. spin on	E-1500	HP-3002
C20	350 V8 CARB	E-1450	
C20	350 V8 CARB - 2qt. spin on	E-1450	HP-6002
C20	350 V8 CARB - w/o 2qt. spin on	E-1450	HP-3002
C20	454 V8 CARB	E-1500	
C20	454 V8 CARB - w/o 2qt. spin on	E-1500	HP-3002
C20 Suburban	350 V8 CARB	E-1450	
C20 Suburban	350 V8 CARB - 2qt. spin on	E-1450	HP-6002
C20 Suburban	350 V8 CARB - w/o 2qt. spin on	E-1450	HP-3002
C20 Suburban	454 V8 CARB	E-1500	
C20 Suburban	454 V8 CARB - w/o 2qt. spin on	E-1500	HP-3002
C30 Truck	350 V8 CARB	E-1450	
C30 Truck	350 V8 CARB - 2qt. spin on	E-1450	HP-6002
C30 Truck	350 V8 CARB - w/o 2qt. spin on	E-1450	HP-3002
C30 Truck	350 V8 DSL	E-1690	HP-2003
C30 Truck	454 V8 CARB	E-1500	
C30 Truck	454 V8 CARB - w/o 2qt. spin on	E-1500	HP-3002
Camaro	305 V8 CARB	E-1450	HP-2002
Camaro	350 V8 CARB	E-1500	HP-2002
Caprice	350 V8 CARB	E-1500	HP-2002
Chevette	98 L4 CARB		HP-1001
Corvette	350 V8 CARB	E-1500	HP-2002
El Camino	305 V8 CARB	E-1450	HP-2002
El Camino	350 V8 CARB	E-1500	HP-2002
Impala	305 V8 CARB	E-1500	HP-2002
Impala	350 V8 CARB	E-1500	HP-2002
K5 Blazer	350 V8 CARB	E-1500	
K5 Blazer	350 V8 CARB - w/o 2qt. spin on	E-1500	HP-3002
K5 Blazer	454 V8 CARB - w/o 2qt. spin on		HP-3002
K10	350 V8 CARB	E-1450	
K10	350 V8 CARB - 2qt. spin on	E-1450	HP-6002
K10	350 V8 CARB - w/o 2qt. spin on	E-1450	HP-3002
K10	400 V8 CARB	E-1500	HP-3002
K10 Suburban	350 V8 CARB	E-1450	
K10 Suburban	350 V8 CARB - 2qt. spin on	E-1450	HP-6002
K10 Suburban	350 V8 CARB - w/o 2qt. spin on	E-1450	HP-3002
K10 Suburban	400 V8 CARB	E-1500	HP-3002
K20	350 V8 CARB	E-1450	
K20	350 V8 CARB - 2qt. spin on	E-1450	HP-6002
K20	350 V8 CARB - w/o 2qt. spin on	E-1450	HP-3002
K20 Suburban	350 V8 CARB	E-1450	
K20 Suburban	350 V8 CARB - 2qt. spin on	E-1450	HP-6002
K20 Suburban	350 V8 CARB - w/o 2qt. spin on	E-1450	HP-3002
Malibu	350 V8 CARB	E-1500	HP-2002
Monte Carlo	305 V8 CARB	E-1450	HP-2002
Nova	250 L6 CARB	E-1070	HP-2002
Nova	305 V8 CARB	E-1450	HP-2002
Nova	350 V8 CARB	E-1500	HP-2002

1977 CHEVROLET

Vehicle	Engine Type	Air Filter	Oil Filter
C10	305 V8 CARB	E-1450	HP-3002
C10	350 V8 CARB	E-1500	

1977 CHEVROLET

Vehicle	Engine Type	Air Filter	Oil Filter
C10	350 V8 CARB - 2qt. spin on	E-1500	HP-6002
C10	350 V8 CARB - w/o 2qt. spin on	E-1500	HP-3002
C10	400 V8 CARB	E-1500	
C10	400 V8 CARB - w/o 2qt. spin on	E-1500	HP-3002
C10	454 V8 CARB	E-1500	
C10	454 V8 CARB - 2qt. spin on	E-1500	HP-6002
C10	454 V8 CARB - w/o 2qt. spin on	E-1500	HP-3002
C10 Suburban	250 L6 CARB - w/ 3 in Tall Filter	E-1120	
C10 Suburban	305 V8 CARB	E-1450	HP-3002
C10 Suburban	350 V8 CARB	E-1500	
C10 Suburban	350 V8 CARB - 2qt. spin on	E-1500	HP-6002
C10 Suburban	350 V8 CARB - w/o 2qt. spin on	E-1500	HP-3002
C10 Suburban	454 V8 CARB	E-1500	
C10 Suburban	454 V8 CARB - 2qt. spin on	E-1500	HP-6002
C10 Suburban	454 V8 CARB - w/o 2qt. spin on	E-1500	HP-3002
C20	350 V8 CARB	E-1500	
C20	350 V8 CARB - 2qt. spin on	E-1500	HP-6002
C20	350 V8 CARB - w/o 2qt. spin on	E-1500	HP-3002
C20	454 V8 CARB	E-1500	
C20	454 V8 CARB - 2qt. spin on	E-1500	HP-6002
C20	454 V8 CARB - w/o 2qt. spin on	E-1500	HP-3002
C20 Suburban	350 V8 CARB	E-1500	
C20 Suburban	350 V8 CARB - 2qt. spin on	E-1500	HP-6002
C20 Suburban	350 V8 CARB - w/o 2qt. spin on	E-1500	HP-3002
C20 Suburban	454 V8 CARB	E-1500	
C20 Suburban	454 V8 CARB - 2qt. spin on	E-1500	HP-6002
C20 Suburban	454 V8 CARB - w/o 2qt. spin on	E-1500	HP-3002
C30 Truck	350 V8 CARB	E-1500	
C30 Truck	350 V8 CARB - 2qt. spin on	E-1500	HP-6002
C30 Truck	350 V8 CARB - w/o 2qt. spin on	E-1500	HP-3002
C30 Truck	454 V8 CARB	E-1500	
C30 Truck	454 V8 CARB - 2qt. spin on	E-1500	HP-6002
C30 Truck	454 V8 CARB - w/o 2qt. spin on	E-1500	HP-3002
Camaro	305 V8 CARB	E-1450	HP-2002
Camaro	350 V8 CARB	E-1500	HP-2002
Caprice	350 V8 CARB	E-1500	HP-2002
Corvette	350 V8 CARB	E-1500	HP-2002
El Camino	305 V8 CARB	E-1500	HP-3002
El Camino	350 V8 CARB	E-1500	HP-3002
Impala	350 V8 CARB	E-1500	HP-2002
K5 Blazer	350 V8 CARB	E-1500	
K5 Blazer	350 V8 CARB - 2qt. spin on	E-1500	HP-6002
K5 Blazer	350 V8 CARB - w/o 2qt. spin on	E-1500	HP-3002
K5 Blazer	400 V8 CARB	E-1500	
K5 Blazer	400 V8 CARB - w/o 2qt. spin on	E-1500	HP-3002
K10	250 L6 CARB - w/ 3 in Tall Filter	E-1120	
K10	350 V8 CARB	E-1500	
K10	350 V8 CARB - 2qt. spin on	E-1500	HP-6002

Vehicle	Engine Type	Air Filter	Oil Filter
1977 CHEVROLET			
K10	350 V8 CARB - w/o 2qt. spin on	E-1500	HP-3002
K10	400 V8 CARB	E-1500	
K10	400 V8 CARB - 2qt. spin on	E-1500	HP-6002
K10	400 V8 CARB - w/o 2qt. spin on	E-1500	HP-3002
K10 Suburban	250 L6 CARB	E-1120	HP-2002
K10 Suburban	350 V8 CARB	E-1500	
K10 Suburban	350 V8 CARB - 2qt. spin on	E-1500	HP-6002
K10 Suburban	350 V8 CARB - w/o 2qt. spin on	E-1500	HP-3002
K10 Suburban	400 V8 CARB	E-1500	
K10 Suburban	400 V8 CARB - 2qt. spin on	E-1500	HP-6002
K10 Suburban	400 V8 CARB - w/o 2qt. spin on	E-1500	HP-3002
K20	350 V8 CARB	E-1500	
K20	350 V8 CARB - w/o 2qt. spin on	E-1500	HP-3002
K20 Suburban	350 V8 CARB	E-1500	
K20 Suburban	350 V8 CARB - w/o 2qt. spin on	E-1500	HP-3002
K30	454 V8 CARB - w/o 2qt. spin on		HP-3002
Monte Carlo	305 V8 CARB	E-1500	HP-2002
Monte Carlo	350 V8 CARB	E-1500	HP-2002
Nova	250 L6 CARB	E-1070	HP-2002
Nova	305 V8 CARB	E-1450	HP-2002
Nova	350 V8 CARB	E-1500	HP-2002
1976 CHEVROLET			
C10	250 L6 CARB		HP-2002
C10	250 L6 CARB - w/o pwr. brakes	E-1070	HP-2002
C10	250 L6 CARB - w/pwr. brakes	E-1120	HP-2002
C10	350 V8 CARB	E-1500	
C10	350 V8 CARB - 2qt. spin on	E-1500	HP-6002
C10	350 V8 CARB - w/o 2qt. spin on	E-1500	HP-3002
C10	400 V8 CARB	E-1500	
C10	400 V8 CARB - 2qt. spin on	E-1500	HP-6002
C10	400 V8 CARB - w/o 2qt. spin on	E-1500	HP-3002
C10	454 V8 CARB	E-1500	
C10	454 V8 CARB - 2qt. spin on	E-1500	HP-6002
C10	454 V8 CARB - w/o 2qt. spin on	E-1500	HP-3002
C10 Suburban	250 L6 CARB	E-1120	HP-2002
C10 Suburban	350 V8 CARB	E-1500	
C10 Suburban	350 V8 CARB - 2qt. spin on	E-1500	HP-6002
C10 Suburban	350 V8 CARB - w/o 2qt. spin on	E-1500	HP-3002
C10 Suburban	454 V8 CARB	E-1500	
C10 Suburban	454 V8 CARB - 2qt. spin on	E-1500	HP-6002
C10 Suburban	454 V8 CARB - w/o 2qt. spin on	E-1500	HP-3002
C20	350 V8 CARB	E-1500	
C20	350 V8 CARB - 2qt. spin on	E-1500	HP-6002
C20	350 V8 CARB - w/o 2qt. spin on	E-1500	HP-3002
C20	454 V8 CARB	E-1500	
C20	454 V8 CARB - w/o 2qt. spin on	E-1500	HP-3002
C20 Suburban	350 V8 CARB	E-1500	
C20 Suburban	350 V8 CARB - 2qt. spin on	E-1500	HP-6002

Vehicle	Engine Type	Air Filter	Oil Filter
1976 CHEVROLET			
C20 Suburban	350 V8 CARB - w/o 2qt. spin on	E-1500	HP-3002
C20 Suburban	400 V8 CARB	E-1500	
C20 Suburban	400 V8 CARB - w/o 2qt. spin on	E-1500	HP-3002
C20 Suburban	454 V8 CARB	E-1500	
C20 Suburban	454 V8 CARB - 2qt. spin on	E-1500	HP-6002
C20 Suburban	454 V8 CARB - w/o 2qt. spin on	E-1500	HP-3002
C30 Truck	454 V8 CARB	E-1500	
C30 Truck	454 V8 CARB - 2qt. spin on	E-1500	HP-6002
C30 Truck	454 V8 CARB - w/o 2qt. spin on	E-1500	HP-3002
Camaro	305 V8 CARB	E-1450	HP-2002
Camaro	350 V8 CARB	E-1500	HP-2002
Caprice	350 V8 CARB	E-1500	HP-2002
Corvette	350 V8 CARB	E-1500	HP-2002
El Camino	350 V8 CARB	E-1500	HP-3002
Impala	350 V8 CARB	E-1500	HP-2002
K5 Blazer	350 V8 CARB	E-1500	
K5 Blazer	350 V8 CARB - w/o 2qt. spin on	E-1500	HP-3002
K10	350 V8 CARB	E-1500	
K10	350 V8 CARB - 2qt. spin on	E-1500	HP-6002
K10	350 V8 CARB - w/o 2qt. spin on	E-1500	HP-3002
K10 Suburban	350 V8 CARB	E-1500	
K10 Suburban	350 V8 CARB - 2qt. spin on	E-1500	HP-6002
K10 Suburban	350 V8 CARB - w/o 2qt. spin on	E-1500	HP-3002
K20	350 V8 CARB	E-1500	
K20	350 V8 CARB - 2qt. spin on	E-1500	HP-6002
K20	350 V8 CARB - w/o 2qt. spin on	E-1500	HP-3002
K20	400 V8 CARB	E-1500	
K20	400 V8 CARB - w/o 2qt. spin on	E-1500	HP-3002
K20	454 V8 CARB	E-1500	
K20	454 V8 CARB - 2qt. spin on	E-1500	HP-6002
K20	454 V8 CARB - w/o 2qt. spin on	E-1500	HP-3002
K20 Suburban	350 V8 CARB	E-1500	
K20 Suburban	350 V8 CARB - 2qt. spin on	E-1500	HP-6002
K20 Suburban	350 V8 CARB - w/o 2qt. spin on	E-1500	HP-3002
K20 Suburban	400 V8 CARB	E-1500	
K20 Suburban	400 V8 CARB - 2qt. spin on	E-1500	HP-6002
K20 Suburban	400 V8 CARB - w/o 2qt. spin on	E-1500	HP-3002
Monte Carlo	350 V8 CARB	E-1500	HP-2002
Nova	250 L6 CARB	E-1070	HP-2002
Nova	350 V8 CARB	E-1500	HP-2002
Vega	2.0L L4 F/I	E-4490	HP-2002
1975 CHEVROLET			
C10	250 L6 CARB - w/pwr. brakes	E-1120	
C10	350 V8 2 BBL.	E-1450	
C10	350 V8 2 BBL. - 2qt. spin on	E-1450	HP-6002
C10	350 V8 2 BBL. - w/o 2qt. spin on	E-1450	HP-3002
C10	350 V8 4 BBL.	E-1500	
C10	350 V8 4 BBL. - 2qt. spin on	E-1500	HP-6002
C10	350 V8 4 BBL. - w/o 2qt. spin on	E-1500	HP-3002

*Indicates 2 filters required ♦ - Intake kit available - see page 80 Applications updated daily at knfilters.com

Vehicle	Engine Type	Air Filter	Oil Filter
1975 CHEVROLET			
C10	454 V8 CARB	E-1500	
C10	454 V8 CARB - 2qt. spin on	E-1500	HP-6002
C10	454 V8 CARB - w/o 2qt. spin on	E-1500	HP-3002
C10 Suburban	250 L6 CARB - w/ 3 in Tall Filter	E-1120	
C10 Suburban	350 V8 2 BBL.	E-1450	
C10 Suburban	350 V8 2 BBL. - 2qt. spin on	E-1450	HP-6002
C10 Suburban	350 V8 2 BBL. - w/o 2qt. spin on	E-1450	HP-3002
C10 Suburban	350 V8 4 BBL.	E-1500	
C10 Suburban	350 V8 4 BBL. - 2qt. spin on	E-1500	HP-6002
C10 Suburban	350 V8 4 BBL. - w/o 2qt. spin on	E-1500	HP-3002
C10 Suburban	454 V8 CARB	E-1500	
C10 Suburban	454 V8 CARB - 2qt. spin on	E-1500	HP-6002
C10 Suburban	454 V8 CARB - w/o 2qt. spin on	E-1500	HP-3002
C20	350 V8 2 BBL.	E-1450	
C20	350 V8 2 BBL. - 2qt. spin on	E-1450	HP-6002
C20	350 V8 2 BBL. - w/o 2qt. spin on	E-1450	HP-3002
C20	350 V8 4 BBL.	E-1500	
C20	350 V8 4 BBL. - 2qt. spin on	E-1500	HP-6002
C20	350 V8 4 BBL. - w/o 2qt. spin on	E-1500	HP-3002
C20	454 V8 CARB - w/o 2qt. spin on		HP-3002
C20 Suburban	350 V8 2 BBL.	E-1450	
C20 Suburban	350 V8 2 BBL. - 2qt. spin on	E-1450	HP-6002
C20 Suburban	350 V8 2 BBL. - w/o 2qt. spin on	E-1450	HP-3002
C20 Suburban	350 V8 4 BBL.	E-1500	
C20 Suburban	350 V8 4 BBL. - 2qt. spin on	E-1500	HP-6002
C20 Suburban	350 V8 4 BBL. - w/o 2qt. spin on	E-1500	HP-3002
C20 Suburban	454 V8 CARB	E-1500	
C20 Suburban	454 V8 CARB - w/o 2qt. spin on	E-1500	HP-3002
C30 Truck	292 L6 CARB	E-1120	HP-2002
C30 Truck	350 V8 2 BBL.	E-1450	
C30 Truck	350 V8 2 BBL. - 2qt. spin on	E-1450	HP-6002
C30 Truck	350 V8 2 BBL. - w/o 2qt. spin on	E-1450	HP-3002
C30 Truck	350 V8 4 BBL.	E-1500	
C30 Truck	350 V8 4 BBL. - 2qt. spin on	E-1500	HP-6002
C30 Truck	350 V8 4 BBL. - w/o 2qt. spin on	E-1500	HP-3002
C30 Truck	454 V8 CARB	E-1500	
C30 Truck	454 V8 CARB - 2qt. spin on	E-1500	HP-6002
C30 Truck	454 V8 CARB - w/o 2qt. spin on	E-1500	HP-3002
Camaro	350 V8 2 BBL.	E-1450	HP-2002
Camaro	350 V8 4 BBL.	E-1500	HP-2002
Caprice	350 V8 2 BBL.	E-1500	HP-2002
Caprice	350 V8 4 BBL.	E-1500	HP-2002
Corvette	350 V8 CARB	E-1500	HP-2002
El Camino	350 V8 2 BBL.	E-1500	HP-3002
El Camino	350 V8 4 BBL.	E-1500	HP-3002
G10	250 L6 CARB	E-1070	HP-2002
K5 Blazer	350 V8 2 BBL.	E-1450	
K5 Blazer	350 V8 2 BBL. - w/o 2qt. spin on	E-1450	HP-3002
K5 Blazer	350 V8 4 BBL.	E-1500	
1975 CHEVROLET			
K5 Blazer	350 V8 4 BBL. - w/o 2qt. spin on	E-1500	HP-3002
K10	350 V8 2 BBL.	E-1450	
K10	350 V8 2 BBL. - 2qt. spin on	E-1450	HP-6002
K10	350 V8 2 BBL. - w/o 2qt. spin on	E-1450	HP-3002
K10	350 V8 4 BBL.	E-1500	
K10	350 V8 4 BBL. - 2qt. spin on	E-1500	HP-6002
K10	350 V8 4 BBL. - w/o 2qt. spin on	E-1500	HP-3002
K10 Suburban	350 V8 2 BBL.	E-1450	
K10 Suburban	350 V8 2 BBL. - 2qt. spin on	E-1450	HP-6002
K10 Suburban	350 V8 2 BBL. - w/o 2qt. spin on	E-1450	HP-3002
K10 Suburban	350 V8 4 BBL.	E-1500	
K10 Suburban	350 V8 4 BBL. - 2qt. spin on	E-1500	HP-6002
K10 Suburban	350 V8 4 BBL. - w/o 2qt. spin on	E-1500	HP-3002
K20	350 V8 2 BBL.	E-1450	
K20	350 V8 2 BBL. - 2qt. spin on	E-1450	HP-6002
K20	350 V8 2 BBL. - w/o 2qt. spin on	E-1450	HP-3002
K20	350 V8 4 BBL.	E-1500	
K20	350 V8 4 BBL. - 2qt. spin on	E-1500	HP-6002
K20	350 V8 4 BBL. - w/o 2qt. spin on	E-1500	HP-3002
K20 Suburban	350 V8 2 BBL.	E-1450	
K20 Suburban	350 V8 2 BBL. - w/o 2qt. spin on	E-1450	HP-3002
K20 Suburban	350 V8 4 BBL.	E-1500	
K20 Suburban	350 V8 4 BBL. - w/o 2qt. spin on	E-1500	HP-3002
Malibu	350 V8 2 BBL.	E-1500	HP-2002
Malibu	350 V8 4 BBL.	E-1500	HP-2002
Monte Carlo	350 V8 CARB	E-1500	HP-2002
Nova	350 V8 2 BBL.	E-1450	HP-2002
Nova	350 V8 4 BBL.	E-1500	HP-2002
Vega	2.0L L4 F/I		HP-2002
1974 CHEVROLET			
Blazer	350 V8 2 BBL.	E-1450	
Blazer	350 V8 2 BBL. - w/o 2qt. spin on	E-1450	HP-3002
Blazer	350 V8 4 BBL.	E-1150	
Blazer	350 V8 4 BBL. - w/o 2qt. spin on	E-1150	HP-3002
C10 Pickup	350 V8 2 BBL.	E-1450	
C10 Pickup	350 V8 2 BBL. - 2qt. spin on	E-1450	HP-6002
C10 Pickup	350 V8 2 BBL. - w/o 2qt. spin on	E-1450	HP-3002
C10 Pickup	350 V8 4 BBL.	E-1500	
C10 Pickup	350 V8 4 BBL. - 2qt. spin on	E-1500	HP-6002
C10 Pickup	350 V8 4 BBL. - w/o 2qt. spin on	E-1500	HP-3002
C10 Pickup	454 V8 CARB - w/o 2qt. spin on		HP-3002
C20 Pickup	350 V8 2 BBL.	E-1450	
C20 Pickup	350 V8 2 BBL. - 2qt. spin on	E-1450	HP-6002
C20 Pickup	350 V8 2 BBL. - w/o 2qt. spin on	E-1450	HP-3002
C20 Pickup	350 V8 4 BBL.	E-1500	
C20 Pickup	350 V8 4 BBL. - 2qt. spin on	E-1500	HP-6002
C20 Pickup	350 V8 4 BBL. - w/o 2qt. spin on	E-1500	HP-3002
C30 Pickup	454 V8 CARB	E-1500	

Vehicle	Engine Type	Air Filter	Oil Filter
1974 CHEVROLET			
C30 Pickup	454 V8 CARB - w/o 2qt. spin on	E-1500	HP-3002
Camaro	350 V8 CARB		HP-2002
Camaro	350 V8 CARB - exc. Z28	E-1450	HP-2002
Camaro	350 V8 CARB - Z28	E-1650	HP-2002
Caprice	400 V8 CARB	E-1500	HP-2002
Corvette	350 V8 CARB	E-1500	HP-2002
Corvette	454 V8 CARB	E-1500	HP-2002
El Camino	350 V8 CARB	E-1500	HP-3002
Impala	350 V8 CARB	E-1500	HP-2002
Impala	400 V8 CARB	E-1500	HP-2002
K10 Pickup	350 V8 2 BBL.	E-1450	
K10 Pickup	350 V8 2 BBL. - 2qt. spin on	E-1450	HP-6002
K10 Pickup	350 V8 2 BBL. - w/o 2qt. spin on	E-1450	HP-3002
K10 Pickup	350 V8 4 BBL.	E-1500	
K10 Pickup	350 V8 4 BBL. - 2qt. spin on	E-1500	HP-6002
K10 Pickup	350 V8 4 BBL. - w/o 2qt. spin on	E-1500	HP-3002
K20 Pickup	350 V8 2 BBL.	E-1450	
K20 Pickup	350 V8 2 BBL. - 2qt. spin on	E-1450	HP-6002
K20 Pickup	350 V8 2 BBL. - w/o 2qt. spin on	E-1450	HP-3002
K20 Pickup	350 V8 4 BBL.	E-1500	
K20 Pickup	350 V8 4 BBL. - 2qt. spin on	E-1500	HP-6002
K20 Pickup	350 V8 4 BBL. - w/o 2qt. spin on	E-1500	HP-3002
K20 Pickup	454 V8 CARB - 3-7/16 in tall filter	E-1500	
K20 Pickup	454 V8 CARB - w/o 2qt. spin on		HP-3002
K30 Pickup	454 V8 CARB - 2qt. spin on		HP-6002
K30 Pickup	454 V8 CARB - 3-7/16 in tall filter	E-1500	
K30 Pickup	454 V8 CARB - 5-1/2 in tall filter	E-1420	
K30 Pickup	454 V8 CARB - w/o 2qt. spin on		HP-3002
Monte Carlo	350 V8 CARB	E-1500	HP-2002
Nova	250 L6 CARB	E-1070	HP-2002
Nova	350 V8 CARB	E-1450	HP-2002
Vega	140 L4 CARB		HP-2002
1973 CHEVROLET			
Blazer	350 V8 CARB	E-1450	HP-3002
C10 Pickup	350 V8 CARB	E-1500	HP-3002
C10 Pickup	454 V8 CARB	E-1500	HP-3002
C20 Pickup	350 V8 CARB	E-1500	HP-3002
C20 Pickup	454 V8 CARB	E-1500	HP-3002
C30 Pickup	350 V8 CARB	E-1500	HP-3002
Camaro	350 V8 CARB		HP-2002
Camaro	350 V8 CARB - exc. Z28	E-1450	HP-2002
Camaro	350 V8 CARB - Z28	E-1650	HP-2002
Caprice	400 V8 CARB	E-1500	HP-2002
Chevelle	350 V8 CARB	E-1500	HP-2002
Chevelle	454 V8 CARB	E-1500	HP-2002
Corvette	350 V8 CARB		HP-2002
Corvette	350 V8 CARB - exc. Hi Perf.	E-1450	HP-2002
Corvette	350 V8 CARB - Hi Perf.	E-1650	HP-2002
Corvette	454 V8 CARB	E-1450	HP-2002
El Camino	350 V8 CARB	E-1500	HP-3002
Impala	350 V8 CARB	E-1500	HP-2002
K10 Pickup	350 V8 CARB	E-1500	HP-3002
K20 Pickup	350 V8 CARB	E-1500	HP-3002
Monte Carlo	350 V8 CARB	E-1500	HP-2002
Nova	350 V8 CARB	E-1450	HP-2002
1972 CHEVROLET			
Bel Air	400 V8 CARB	E-1500	HP-2002
Blazer	350 V8 CARB	E-1450	HP-3002
C10 Pickup	250 L6 CARB		HP-2002
C10 Pickup	250 L6 CARB - w/o pwr. brakes	E-1070	HP-2002
C10 Pickup	250 L6 CARB - w/pwr. brakes	E-1120	HP-2002
C10 Pickup	307 V8 CARB	E-1150	HP-3002
C10 Pickup	350 V8 CARB - VIN H	E-1450	HP-3002
C10 Pickup	350 V8 CARB - VIN J	E-1500	HP-3002
C10 Pickup	402 V8 CARB	E-1450	HP-3002
C20 Pickup	350 V8 CARB	E-1500	HP-3002
C20 Pickup	402 V8 CARB	E-1450	HP-3002
Camaro	350 V8 CARB	E-1450	HP-2002
Camaro	402 V8 CARB	E-1450	HP-2002
Camaro Z28	350 V8 CARB	E-1650	HP-2002
Chevelle	307 V8 CARB	E-1500	HP-2002
Chevelle	350 V8 CARB	E-1500	HP-2002
Chevelle	402 V8 CARB		HP-2002
Chevelle	402 V8 CARB - w/ A/C	E-1450	HP-2002
Chevelle	402 V8 CARB - w/o A/C	E-1500	HP-2002
Chevelle	454 V8 CARB		HP-2002
Chevelle	454 V8 CARB - w/hood scoop	E-1650	HP-2002
Chevelle	454 V8 CARB - w/o hood scoop	E-1450	HP-2002
Corvette	350 V8 CARB		HP-2002
Corvette	350 V8 CARB - w/ Rochester Carb.	E-1450	HP-2002
Corvette	350 V8 CARB - w/Holley Carb.	E-1650	HP-2002
Corvette	454 V8 CARB	E-1450	HP-2002
El Camino	350 V8 CARB	E-1500	HP-3002
El Camino	402 V8 CARB	E-1450	HP-3002
El Camino	454 V8 CARB	E-1450	HP-3002
Impala	350 V8 CARB	E-1500	HP-2002
Impala	454 V8 CARB	E-1500	HP-2002
K10 Pickup	350 V8 CARB	E-1500	HP-3002
K10 Suburban	350 V8 CARB	E-1450	HP-3002
K20 Pickup	350 V8 CARB	E-1500	HP-3002
Monte Carlo	350 V8 CARB	E-1500	HP-2002
Monte Carlo	454 V8 CARB		HP-2002
Monte Carlo	454 V8 CARB - w/hood scoop	E-1650	HP-2002
Monte Carlo	454 V8 CARB - w/o hood scoop	E-1500	HP-2002
Nova	250 L6 CARB	E-1070	HP-2002
Nova	307 V8 CARB	E-1450	HP-2002
Nova	350 V8 CARB	E-1450	HP-2002
P10 Van	250 L6 CARB	E-1120	HP-2002
1971 CHEVROLET			
Blazer	350 V8 CARB	E-1450	HP-3002
C10 Pickup	350 V8 CARB	E-1450	HP-3002
C10 Pickup	402 V8 CARB	E-1450	HP-3002
C20 Pickup	350 V8 CARB	E-1450	HP-3002
C30 Pickup	350 V8 CARB	E-1450	HP-3002
Camaro	350 V8 CARB		HP-2002
Camaro	350 V8 CARB - exc. Z28	E-1450	HP-2002
Camaro	350 V8 CARB - Z28	E-1650	HP-2002
Camaro	402 V8 CARB	E-1450	HP-2002
Caprice	402 V8 CARB	E-1500	HP-2002
Chevelle	350 V8 CARB	E-1500	HP-2002

*Indicates 2 filters required ♦ - Intake kit available - see page 80 Applications updated daily at knfilters.com

Vehicle	Engine Type	Air Filter	Oil Filter
1971 CHEVROLET			
Chevelle	400 V8 CARB	E-1500	HP-2002
Chevelle	454 V8 CARB	E-1650	HP-2002
Chevelle SS	454 V8 CARB		HP-2002
Chevelle SS	454 V8 CARB - w/o air cond.	E-1450	HP-2002
Corvette	350 V8 CARB		HP-2002
Corvette	350 V8 CARB - w/ Rochester Carb.	E-1450	HP-2002
Corvette	350 V8 CARB - w/Holley Carb.	E-1650	HP-2002
Corvette	454 V8 CARB		HP-2002
Corvette	454 V8 CARB - w/ Rochester Carb.	E-1450	HP-2002
Corvette	454 V8 CARB - w/Holley Carb.	E-1650	HP-2002
El Camino	350 V8 CARB	E-1500	HP-3002
El Camino	402 V8 CARB	E-1500	HP-3002
El Camino	454 V8 CARB		HP-3002
El Camino	454 V8 CARB - Hi Perf.	E-1650	HP-3002
Impala	400 V8 CARB	E-1500	HP-2002
Impala	454 V8 CARB	E-1500	HP-2002
K10 Pickup	350 V8 CARB	E-1450	HP-3002
K20 Pickup	350 V8 CARB	E-1450	HP-3002
Monte Carlo	350 V8 CARB	E-1500	HP-2002
Monte Carlo	402 V8 CARB	E-1500	HP-2002
Monte Carlo	454 V8 CARB	E-1500	HP-2002
Nova	250 L6 CARB	E-1070	HP-2002
Nova	307 V8 CARB	E-1070	HP-2002
Nova	350 V8 CARB	E-1450	HP-2002
1970 CHEVROLET			
Bel Air	350 V8 CARB	E-1500	HP-2002
Blazer	350 V8 CARB	E-1450	HP-3002
C10 Pickup	307 V8 CARB	E-1150	HP-3002
C10 Pickup	350 V8 CARB	E-1450	HP-3002
C10 Pickup	402 V8 CARB	E-1450	HP-3002
C10 Suburban	350 V8 CARB	E-1450	HP-3002
C20 Pickup	350 V8 CARB	E-1450	HP-3002
C20 Pickup	402 V8 CARB	E-1450	HP-3002
C30 Pickup	350 V8 CARB	E-1450	HP-3002
C30 Pickup	402 V8 CARB	E-1450	HP-3002
Camaro	250 L6 CARB	E-1070	HP-2002
Camaro	350 V8 CARB	E-1450	HP-2002
Camaro	396 V8 CARB	E-1650	HP-2002
Camaro	402 V8 CARB	E-1650	HP-2002
Caprice	350 V8 CARB	E-1500	HP-2002
Chevelle	250 L6 CARB	E-1070	HP-2002
Chevelle	307 V8 CARB	E-1070	HP-2002
Chevelle	350 V8 CARB	E-1500	HP-2002
Chevelle	396 V8 CARB	E-1650	HP-2002
Chevelle	400 V8 CARB	E-1500	HP-2002
Chevelle	402 V8 CARB	E-1650	
Chevelle	454 V8 CARB	E-1650	HP-2002
Corvette	350 V8 CARB		HP-2002
Corvette	350 V8 CARB - High Output	E-1650	HP-2002
Corvette	350 V8 CARB - w/o High Output	E-1450	HP-2002
Corvette	454 V8 CARB	E-1650	HP-2002
El Camino	350 V8 CARB	E-1500	HP-3002
El Camino	396 V8 CARB	E-1450	HP-3002
El Camino	454 V8 CARB	E-1650	HP-3002
Heavy Duty Truck	427 V8 4 BBL. - 40-80	E-1320	
Impala	350 V8 CARB	E-1500	HP-2002
K10 Pickup	350 V8 CARB	E-1450	HP-3002
K20 Pickup	350 V8 CARB	E-1450	HP-3002
Monte Carlo	350 V8 CARB	E-1500	HP-2002

Vehicle	Engine Type	Air Filter	Oil Filter
1970 CHEVROLET			
Monte Carlo	454 V8 CARB	E-1500	HP-2002
Nova	153 L4 CARB	E-1070	HP-1011
Nova	250 L6 CARB	E-1070	HP-1011
Nova	350 V8 CARB	E-1450	HP-1011
Nova	396 V8 CARB	E-1650	HP-1011
Nova	402 V8 CARB	E-1650	HP-1011
1969 CHEVROLET			
Biscayne	427 V8 CARB	E-1650	HP-2002
C10 Pickup	250 L6 CARB	E-1070	HP-2002
C10 Pickup	307 V8 CARB	E-1150	HP-3002
C10 Pickup	350 V8 CARB	E-1450	HP-2002
C10 Pickup	396 V8 CARB		HP-2002
C10 Pickup	396 V8 CARB - exc. Hi Perf.	E-1450	HP-2002
C10 Pickup	396 V8 CARB - Hi Perf.	E-1650	HP-2002
C20 Pickup	350 V8 CARB	E-1450	
C20 Pickup	396 V8 CARB - Hi Perf.	E-1650	
C30 Pickup	396 V8 CARB - Hi Perf.	E-1650	
Camaro	230 L6 CARB	E-1070	HP-2002
Camaro	250 L6 CARB	E-1070	HP-2002
Camaro	302 V8 CARB	E-1650	HP-2002
Camaro	307 V8 CARB	E-1070	HP-2002
Camaro	327 V8 CARB	E-1070	HP-2002
Camaro	350 V8 2 BBL.	E-1450	HP-2002
Camaro	350 V8 4 BBL.	E-1500	HP-2002
Camaro	396 V8 CARB	E-1650	HP-2002
Camaro	427 V8 CARB	E-1650	
Caprice	350 V8 CARB	E-1500	HP-2002
Caprice	427 V8 CARB - Hi Perf.	E-1650	
Chevelle	307 V8 CARB	E-1070	HP-2002
Chevelle	350 V8 CARB	E-1500	HP-2002
Chevelle	396 V8 CARB	E-1450	HP-2002
Chevelle Malibu	307 V8 CARB	E-1500	HP-2002
Corvette	350 V8 CARB	E-1650	HP-2002
Corvette	427 V8 3x2BBL.	E-1970	HP-2002
Corvette	427 V8 4 BBL.	E-1650	HP-2002
El Camino	350 V8 CARB	E-1500	HP-2002
El Camino	396 V8 CARB	E-1450	HP-2002
Impala	327 V8 CARB	E-1500	HP-2002
Impala	350 V8 CARB	E-1500	HP-2002
Impala	396 V8 CARB	E-1500	HP-2002
Impala	427 V8 CARB	E-1650	HP-2002
K10 Pickup	350 V8 CARB	E-1450	
K20 Pickup	396 V8 CARB - Hi Perf.	E-1650	
Nova	230 L6 CARB	E-1070	HP-2002
Nova	350 V8 CARB		HP-2002
Nova	350 V8 CARB - exc. Hi Perf.	E-1500	HP-2002
Nova	350 V8 CARB - Hi Perf.	E-1650	HP-2002
Nova	396 V8 CARB		HP-2002
Nova	396 V8 CARB - exc. Hi Perf.	E-1450	HP-2002
Nova	396 V8 CARB - Hi Perf.	E-1650	HP-2002
1968 CHEVROLET			
C10 Pickup	250 L6 CARB	E-1070	HP-2002
C10 Pickup	292 L6 CARB	E-1150	HP-3002
C10 Pickup	307 V8 CARB	E-1150	
C10 Pickup	307 V8 CARB - exc. cart. type	E-1150	HP-3002
C10 Pickup	327 V8 CARB	E-1450	
C10 Pickup	396 V8 CARB		HP-2002
C10 Pickup	396 V8 CARB - exc. Hi Perf.	E-1450	HP-2002
C10 Pickup	396 V8 CARB - Hi Perf.	E-1650	HP-2002
C10 Suburban	396 V8 CARB - Hi Perf.	E-1650	

*Indicates 2 filters required ♦ - Intake kit available - see page 80 Applications updated daily at knfilters.com

Vehicle	Engine Type	Air Filter	Oil Filter
1968 CHEVROLET			
C20 Pickup	327 V8 CARB	E-1450	
C20 Pickup	396 V8 CARB - Hi Perf.	E-1650	
Camaro	302 V8 CARB	E-1650	HP-2002
Camaro	327 V8 2 BBL.	E-1070	HP-2002
Camaro	327 V8 4 BBL.		HP-2002
Camaro	327 V8 4 BBL. - exc. Hi Perf.	E-1500	HP-2002
Camaro	327 V8 4 BBL. - Hi Perf.	E-1650	HP-2002
Camaro	350 V8 CARB	E-1500	HP-2002
Camaro	396 V8 CARB	E-1650	HP-2002
Caprice	327 V8 CARB	E-1500	HP-2002
Chevelle	307 V8 CARB	E-1070	HP-2002
Chevelle	327 V8 CARB		HP-2002
Chevelle	327 V8 CARB - exc. Hi Perf.	E-1500	HP-2002
Chevelle	327 V8 CARB - Hi Perf.	E-1650	HP-2002
Chevelle	396 V8 CARB		HP-2002
Chevelle	396 V8 CARB - exc. Hi Perf.	E-1450	HP-2002
Chevelle	396 V8 CARB - Hi Perf.	E-1650	HP-2002
Chevelle Malibu	307 V8 CARB	E-1500	HP-2002
Chevy II	327 V8 CARB - Hi Perf.	E-1650	
Chevy II	350 V8 CARB		HP-2002
Chevy II	350 V8 CARB - exc. Hi Perf.	E-1500	HP-2002
Chevy II	350 V8 CARB - Hi Perf.	E-1650	HP-2002
Chevy II	396 V8 CARB - Hi Perf.	E-1650	
Corvair	164 H6 CARB	E-1150	
Corvette	327 V8 CARB	E-1650	HP-2002
Corvette	427 V8 3x2BBL.	E-1970	HP-2002
Corvette	427 V8 4 BBL.	E-1650	HP-2002
El Camino	327 V8 CARB	E-1500	HP-2002
El Camino	396 V8 CARB	E-1450	HP-2002
G10 Van	307 V8 CARB	E-1150	
G10 Van	307 V8 CARB - exc. cart. type	E-1150	HP-3002
Impala	307 V8 CARB	E-1500	HP-2002
Impala	327 V8 CARB	E-1500	HP-2002
Impala	396 V8 CARB	E-1450	HP-2002
Impala	427 V8 CARB	E-1650	HP-2002
K20 Pickup	396 V8 CARB - Hi Perf.	E-1650	
1967 CHEVROLET			
Bel Air	327 V8 CARB	E-1650	
Bel Air	327 V8 CARB - exc. cart. type	E-1650	HP-2002
Bel Air	396 V8 CARB	E-1650	
Bel Air	396 V8 CARB - exc. cart. type	E-1650	HP-2002
Biscayne	327 V8 CARB	E-1650	
C10 Pickup	250 L6 CARB - w/heavy duty filter	E-1150	
C10 Pickup	283 V8 CARB	E-1150	
C10 Pickup	327 V8 CARB	E-1230	
Camaro	230 L6 CARB	E-1070	HP-2002
Camaro	302 V8 CARB	E-1650	HP-2002
Camaro	327 V8 2 BBL.	E-1070	
Camaro	327 V8 2 BBL. - exc. cart. type	E-1070	HP-2002
Camaro	327 V8 4 BBL.	E-1650	
Camaro	327 V8 4 BBL. - exc. cart. type	E-1650	HP-2002
Camaro	350 V8 CARB	E-1650	
Camaro	350 V8 CARB - exc. cart. type	E-1650	HP-2002
Camaro	396 V8 CARB	E-1650	
Camaro	396 V8 CARB - exc. cart. type	E-1650	HP-2002
Caprice	396 V8 CARB	E-1650	

Vehicle	Engine Type	Air Filter	Oil Filter
1967 CHEVROLET			
Chevelle	230 L6 CARB	E-1070	HP-2002
Chevelle	283 V8 CARB	E-1230	
Chevelle	283 V8 CARB - exc. cart. type	E-1230	HP-2002
Chevelle	327 V8 CARB	E-1650	
Chevelle	327 V8 CARB - exc. cart. type	E-1650	HP-2002
Chevelle	396 V8 CARB	E-1650	
Chevelle	396 V8 CARB - exc. cart. type	E-1650	HP-2002
Chevy II	283 V8 CARB	E-1230	
Chevy II	283 V8 CARB - exc. cart. type	E-1230	HP-2002
Chevy II	327 V8 CARB	E-1230	
Chevy II	327 V8 CARB - exc. cart. type	E-1230	HP-2002
Corvair	164 H6 CARB	E-1150	
Corvette	327 V8 CARB	E-1650	
Corvette	327 V8 CARB - exc. cart. type	E-1650	HP-2002
Corvette	427 V8 3x2BBL.	E-1970	
Corvette	427 V8 3x2BBL. - exc. cart. type	E-1970	HP-2002
Corvette	427 V8 4 BBL.	E-1650	
Corvette	427 V8 4 BBL. - exc. cart. type	E-1650	HP-2002
El Camino	283 V8 CARB	E-1230	
El Camino	327 V8 CARB	E-1230	HP-2002
El Camino	396 V8 CARB	E-1650	
Impala	283 V8 CARB	E-1070	
Impala	283 V8 CARB - exc. cart. type	E-1070	HP-2002
Impala	327 V8 CARB	E-1650	
Impala	327 V8 CARB - exc. cart. type	E-1650	HP-2002
Impala	396 V8 CARB	E-1650	
Impala	427 V8 CARB	E-1650	
Impala	427 V8 CARB - exc. cart. type	E-1650	HP-2002
Malibu	327 V8 CARB	E-1230	
Malibu	327 V8 CARB - exc. cart. type	E-1230	HP-2002
Malibu	396 V8 CARB	E-1650	
Malibu	396 V8 CARB - exc. cart. type	E-1650	HP-2002
Nova	283 V8 CARB	E-1070	
Nova	283 V8 CARB - exc. cart. type	E-1070	HP-2002
Nova	327 V8 CARB	E-1230	HP-2002
1966 CHEVROLET			
Bel Air	327 V8 CARB	E-1650	
Biscayne	427 V8 CARB	E-1650	
C10 Panel	250 L6 CARB	E-1070	HP-2002
C10 Pickup	250 L6 CARB		HP-2002
C10 Pickup	250 L6 CARB - w/heavy duty filter	E-1150	HP-2002
C10 Pickup	250 L6 CARB - w/std. filter	E-1070	HP-2002
C10 Pickup	283 V8 CARB	E-1230	
C10 Pickup	292 L6 CARB	E-1150	HP-3002
C10 Pickup	327 V8 CARB	E-1230	
Caprice	327 V8 CARB	E-1650	
Caprice	396 V8 CARB	E-1650	
Chevelle	283 V8 CARB	E-1230	
Chevelle	283 V8 CARB - exc. cart. type	E-1230	HP-2002
Chevelle	327 V8 CARB	E-1650	
Chevelle	327 V8 CARB - exc. cart. type	E-1650	HP-2002
Chevelle	396 V8 CARB	E-1650	

*Indicates 2 filters required ♦ - Intake kit available - see page 80 Applications updated daily at knfilters.com

1966 CHEVROLET

Vehicle	Engine Type	Air Filter	Oil Filter
Chevelle	396 V8 CARB - exc. cart. type	E-1650	HP-2002
Chevy II	327 V8 CARB	E-1650	HP-2002
Corvair	164 H6 CARB - exc. Turbo	E-1150	
Corvette	327 V8 CARB	E-1650	
Corvette	327 V8 CARB - exc. cart. type	E-1650	HP-2002
Corvette	427 V8 CARB	E-1650	
Corvette	427 V8 CARB - exc. cart. type	E-1650	HP-2002
El Camino	283 V8 CARB	E-1230	
El Camino	327 V8 CARB	E-1650	
El Camino	396 V8 CARB	E-1650	
Impala	283 V8 CARB	E-1230	
Impala	283 V8 CARB - exc. cart. type	E-1230	HP-2002
Impala	327 V8 CARB	E-1650	
Impala	327 V8 CARB - exc. cart. type	E-1650	HP-2002
Impala	396 V8 CARB	E-1650	
Impala	427 V8 CARB	E-1650	
Impala	427 V8 CARB - exc. cart. type	E-1650	HP-2002
K10 Pickup	292 L6 CARB	E-1170	HP-3002
Malibu	327 V8 CARB	E-1650	
Nova	327 V8 CARB	E-1230	HP-2002
Suburban	292 L6 CARB	E-1150	HP-3002

1965 CHEVROLET

Vehicle	Engine Type	Air Filter	Oil Filter
Bel Air	327 V8 CARB	E-1650	
Bel Air	327 V8 CARB - exc. cart. type	E-1650	HP-2002
Biscayne	396 V8 CARB	E-1650	
C10 Pickup	230 L6 CARB		HP-2002
C10 Pickup	230 L6 CARB - w/heavy duty filter	E-1150	HP-2002
C10 Pickup	230 L6 CARB - w/std. filter	E-1070	HP-2002
C10 Pickup	283 V8 CARB	E-1230	
C10 Pickup	327 V8 CARB	E-1230	
Chevelle	283 V8 CARB	E-1230	
Chevelle	283 V8 CARB - exc. cart. type	E-1230	HP-2002
Chevelle	327 V8 CARB	E-1230	
Chevelle	327 V8 CARB - exc. cart. type	E-1230	HP-2002
Chevelle	396 V8 CARB	E-1650	
Chevelle	396 V8 CARB - exc. cart. type	E-1650	HP-2002
Corvair	164 H6 CARB - w/ A/C	E-0900	
Corvair	164 H6 CARB - w/o A/C	E-1150	
Corvette	327 V8 CARB	E-1515	
Corvette	327 V8 CARB - exc. cart. type	E-1515	HP-2002
Corvette	396 V8 CARB	E-1650	
Corvette	396 V8 CARB - exc. cart. type	E-1650	HP-2002
El Camino	327 V8 CARB	E-1230	
Impala	283 V8 CARB	E-1230	
Impala	283 V8 CARB - exc. cart. type	E-1230	HP-2002
Impala	327 V8 CARB	E-1650	
Impala	327 V8 CARB - exc. cart. type	E-1650	HP-2002
Impala	396 V8 CARB	E-1650	
Impala	396 V8 CARB - exc. cart. type	E-1650	HP-2002
Malibu	327 V8 CARB	E-1230	
Malibu	327 V8 CARB - exc. cart. type	E-1230	HP-2002
Nova	327 V8 CARB	E-1230	

1964 CHEVROLET

Vehicle	Engine Type	Air Filter	Oil Filter
Biscayne	327 V8 CARB - exc. cart. type		HP-2002
C10 Panel	230 L6 CARB - w/heavy duty filter	E-1150	
C10 Pickup	230 L6 CARB		HP-2002
C10 Pickup	230 L6 CARB - w/heavy duty filter	E-1150	HP-2002
C10 Pickup	230 L6 CARB - w/std. filter	E-1070	HP-2002
C10 Pickup	283 V8 CARB	E-1230	
C10 Pickup	292 L6 CARB	E-1230	
C10 Pickup	292 L6 CARB - exc. Calif	E-1230	HP-2002
C10 Pickup	327 V8 CARB	E-1230	
Chevelle	327 V8 CARB	E-1230	
Chevelle	327 V8 CARB - exc. cart. type	E-1230	HP-2002
Chevy II	283 V8 CARB	E-1230	
Chevy II	283 V8 CARB - exc. cart. type	E-1230	HP-2002
Corvair	164 H6 CARB	E-0900	
Corvette	327 V8 CARB	E-1515	
Corvette	327 V8 CARB - exc. cart. type	E-1515	HP-2002
Corvette	5.3L V8 F/I - exc. cart. type		HP-2002
El Camino	327 V8 CARB	E-1230	
Impala	283 V8 CARB	E-1230	
Impala	283 V8 CARB - exc. cart. type	E-1230	HP-2002
Impala	327 V8 CARB	E-1230	
Impala	327 V8 CARB - exc. cart. type	E-1230	HP-2002
Impala	409 V8 CARB	E-1230	
Impala	409 V8 CARB - exc. cart. type	E-1230	HP-2002
Nova	283 V8 CARB	E-1230	
Nova	283 V8 CARB - exc. cart. type	E-1230	HP-2002

1963 CHEVROLET

Vehicle	Engine Type	Air Filter	Oil Filter
Bel Air	283 V8 CARB	E-1230	
Bel Air	283 V8 CARB - exc. cart. type	E-1230	HP-2002
Chevy II	283 V8 CARB	E-1230	
Chevy II	283 V8 CARB - exc. cart. type	E-1230	HP-2002
Corvair	145 H6 CARB	E-0900	
Corvette	327 V8 CARB	E-1515	
Corvette	327 V8 CARB - exc. cart. type	E-1515	HP-2002
Corvette	5.3L V8 F/I - exc. cart. type		HP-2002
Impala	283 V8 CARB	E-1230	
Impala	283 V8 CARB - exc. cart. type	E-1230	HP-2002
Impala	327 V8 CARB	E-1230	
Impala	327 V8 CARB - exc. cart. type	E-1230	HP-2002
Nova	283 V8 CARB	E-1230	
Nova	283 V8 CARB - exc. cart. type	E-1230	HP-2002

1962 CHEVROLET

Vehicle	Engine Type	Air Filter	Oil Filter
Bel Air	283 V8 CARB	E-1230	
Bel Air	283 V8 CARB - exc. cart. type	E-1230	HP-2002
Bel Air	327 V8 CARB - exc. cart. type		HP-2002
Bel Air	409 V8 CARB	E-1230	
Bel Air	409 V8 CARB - exc. cart. type	E-1230	HP-2002
C10 Pickup	327 V8 CARB	E-1230	
Corvair	145 H6 CARB	E-0900	

Vehicle	Engine Type	Air Filter	Oil Filter
1962 CHEVROLET			
Corvette	327 V8 CARB - exc. cart. type		HP-2002
Corvette	5.3L V8 F/I - exc. cart. type		HP-2002
Impala	283 V8 CARB	E-1230	
Impala	283 V8 CARB - exc. cart. type	E-1230	HP-2002
Impala	327 V8 CARB	E-1230	
Impala	327 V8 CARB - exc. cart. type	E-1230	HP-2002
Impala	409 V8 CARB	E-1230	
Impala	409 V8 CARB - exc. cart. type	E-1230	HP-2002
1961 CHEVROLET			
Corvair	145 H6 CARB	E-0900	
Corvette	283 V8 CARB - exc. cart. type		HP-2002
Corvette	4.6L V8 F/I	E-1935	
Impala	283 V8 CARB	E-1230	
Impala	283 V8 CARB - exc. cart. type	E-1230	HP-2002
Impala	348 V8 CARB	E-1230	
Impala	348 V8 CARB - exc. cart. type	E-1230	HP-2002
1960 CHEVROLET			
Bel Air	283 V8 CARB	E-1230	
Bel Air	283 V8 CARB - exc. cart. type	E-1230	HP-2002
Corvette	283 V8 CARB	E-1230	
Corvette	283 V8 CARB - exc. cart. type	E-1230	HP-2002
Corvette	4.6L V8 F/I	E-1935	
Impala	348 V8 CARB - exc. cart. type		HP-2002
1959 CHEVROLET			
Corvette	4.6L V8 F/I	E-1935	
2013 CHRYSLER			
200	2.4L L4 F/I	33-2373	HP-1017
200	3.6L V6 F/I	33-2470	
300	3.6L V6 F/I	33-2460 ♦	
300	6.4L V8 F/I	33-2460 ♦	HP-2010
300C	5.7L V8 F/I	33-2460 ♦	
300S	5.7L V8 F/I	33-2460	
Town & Country	3.6L V6 F/I	33-2462	
2012 CHRYSLER			
200	2.4L L4 F/I	33-2373	HP-1017
200	3.6L V6 F/I	33-2470	
300	3.6L V6 F/I	33-2460 ♦	
300	6.4L V8 F/I	33-2460 ♦	HP-2010
300C	5.7L V8 F/I	33-2460 ♦	HP-2010
300S	5.7L V8 F/I	33-2460	HP-2010
Town & Country	3.6L V6 F/I	33-2462	
2011 CHRYSLER			
200	2.4L L4 F/I	33-2373	HP-1017
200	3.6L V6 F/I	33-2470	
300	3.6L V6 F/I	33-2460 ♦	
300C	5.7L V8 F/I	33-2460 ♦	HP-2010
Town & Country	3.6L V6 F/I	33-2462	
2010 CHRYSLER			
300	2.7L V6 F/I	33-2295 ♦	HP-1017
300	3.5L V6 F/I	33-2295 ♦	HP-1017
300C	3.0L V6 DSL	33-2304	
300C	5.7L V8 F/I	33-2295 ♦	HP-2010
300C	6.1L V8 F/I	33-2295 ♦	HP-2010
PT Cruiser	2.4L L4 F/I	33-2351 ♦	HP-1002
2010 CHRYSLER			
Sebring	2.0L L4 DSL	33-2373	
Sebring	2.0L L4 F/I	33-2373	
Sebring	2.4L L4 F/I	33-2373	HP-1017
Sebring	2.7L V6 F/I	33-2373	HP-1017
Sebring	3.5L V6 F/I	33-2373	HP-1017
Town & Country Van	3.3L V6 F/I	33-2419	HP-1002
Town & Country Van	3.8L V6 F/I	33-2419	HP-1002
Town & Country Van	4.0L V6 F/I	33-2419	HP-1017
2009 CHRYSLER			
300	2.7L V6 F/I	33-2295 ♦	HP-1017
300	3.5L V6 F/I	33-2295 ♦	HP-2010
300C	3.0L V6 DSL	33-2304	
300C	5.7L V8 F/I	33-2295 ♦	HP-2010
300C	6.1L V8 F/I	33-2295 ♦	HP-2010
Aspen	4.7L V8 F/I	33-2288	HP-2010
Aspen	5.7L V8 F/I	33-2288	HP-2010
PT Cruiser	2.4L L4 F/I	33-2351 33-2351 ♦	
PT Cruiser	2.4L L4 F/I - exc. Turbo	33-2351	HP-1002
PT Cruiser	2.4L L4 F/I - Turbo	33-2351	HP-2009
Sebring	2.0L L4 DSL	33-2373	
Sebring	2.0L L4 F/I	33-2373	
Sebring	2.4L L4 F/I	33-2373	HP-1017
Sebring	2.7L V6 F/I		HP-2010
Sebring	3.5L V6 F/I	33-2373	HP-2010
Town & Country Van	3.3L V6 F/I	33-2419	HP-1002
Town & Country Van	3.8L V6 F/I	33-2419	HP-1002
Town & Country Van	4.0L V6 F/I	33-2419	HP-1017
2008 CHRYSLER			
300	2.7L V6 F/I	33-2295 ♦	HP-2010
300	3.5L V6 F/I	33-2295 ♦	HP-2010
300C	2.7L V6 F/I	33-2295	HP-2010
300C	3.0L V6 DSL	33-2304	
300C	3.5L V6 F/I	33-2295	HP-2010
300C	5.7L V8 F/I	33-2295 ♦	HP-2010
300C	6.1L V8 F/I	33-2295 ♦	HP-2010
Aspen	4.7L V8 F/I	33-2288	HP-2010
Aspen	5.7L V8 F/I	33-2288	HP-2010
Pacifica	3.8L V6 F/I	33-2283	HP-1002
Pacifica	4.0L V6 F/I	33-2283	HP-2004
PT Cruiser	1.6L L4 F/I	33-2351	
PT Cruiser	2.4L L4 F/I	33-2351 ♦ 33-2351 ♦	
PT Cruiser	2.4L L4 F/I - exc. Turbo	33-2351	HP-1002
PT Cruiser	2.4L L4 F/I - Turbo	33-2351	HP-2009
Sebring	2.0L L4 DSL	33-2373	
Sebring	2.0L L4 F/I	33-2373	
Sebring	2.4L L4 F/I	33-2373	HP-1017
Sebring	2.7L V6 F/I	33-2373	HP-2010
Sebring	3.5L V6 F/I	33-2373	
Sebring	3.5L V6 F/I - 22mm Thread	33-2373	HP-2010
Sebring	3.5L V6 F/I - 3/4 thread	33-2373	HP-2004
Town & Country Van	3.3L V6 F/I	33-2419	HP-1002
Town & Country Van	3.8L V6 F/I	33-2419	HP-1002
Town & Country Van	4.0L V6 F/I	33-2419	HP-2004
Voyager Van	3.3L V6 F/I		HP-1002
2007 CHRYSLER			
300	2.7L V6 F/I	33-2295 ♦	HP-2004
300	3.5L V6 F/I	33-2295 ♦	HP-2004
300C	2.7L V6 F/I	33-2295	HP-2004
300C	3.0L V6 DSL	33-2304	
300C	3.5L V6 F/I	33-2295	HP-2004

*Indicates 2 filters required ♦ - Intake kit available - see page 80 Applications updated daily at knfilters.com

2007 CHRYSLER

Vehicle	Engine Type	Air Filter	Oil Filter
300C	5.7L V8 F/I	33-2295 ♦	HP-2004
300C	6.1L V8 F/I	33-2295 ♦	HP-2004
Aspen	4.7L V8 F/I	33-2288	HP-2004
Aspen	5.7L V8 F/I	33-2288 ♦	HP-2004
Pacifica	3.8L V6 F/I	33-2283	HP-2004
Pacifica	4.0L V6 F/I	33-2283	HP-2004
PT Cruiser	1.6L L4 F/I	33-2351	
PT Cruiser	2.4L L4 F/I	33-2351 ♦	
		33-2351 ♦	
PT Cruiser	2.4L L4 F/I - exc. Turbo	33-2351	HP-1002
PT Cruiser	2.4L L4 F/I - Turbo	33-2351	HP-2009
Sebring	2.0L L4 DSL	33-2373	
Sebring	2.0L L4 F/I	33-2373	
Sebring	2.4L L4 F/I	33-2373	HP-1017
Sebring	2.7L V6 F/I	33-2373	HP-2004
Sebring	3.5L V6 F/I	33-2373	HP-2004
Town & Country Van	3.3L V6 F/I	33-2206	HP-1002
Town & Country Van	3.8L V6 F/I	33-2206	HP-1002

2006 CHRYSLER

Vehicle	Engine Type	Air Filter	Oil Filter
300	2.7L V6 F/I	33-2295 ♦	HP-2004
300	3.5L V6 F/I	33-2295 ♦	HP-2004
300C	2.7L V6 F/I	33-2295	HP-2004
300C	3.0L V6 DSL	33-2304	
300C	3.5L V6 F/I	33-2295	HP-2004
300C	5.7L V8 F/I	33-2295 ♦	HP-2004
300C	6.1L V8 F/I	33-2295 ♦	HP-2004
Pacifica	3.5L V6 F/I	33-2283	HP-2004
Pacifica	3.8L V6 F/I	33-2283	HP-2004
PT Cruiser	1.6L L4 F/I	33-2351	
PT Cruiser	2.4L L4 F/I	33-2351 ♦	
		33-2351 ♦	
PT Cruiser	2.4L L4 F/I - exc. Turbo	33-2351	HP-1002
PT Cruiser	2.4L L4 F/I - Turbo	33-2351	HP-2009
Sebring	2.4L L4 F/I	E-1007	HP-1002
Sebring	2.7L V6 F/I	E-1007	HP-2004
Town & Country Van	3.3L V6 F/I	33-2206	HP-2004
Town & Country Van	3.8L V6 F/I	33-2206	HP-2004

2005 CHRYSLER

Vehicle	Engine Type	Air Filter	Oil Filter
300	2.7L V6 F/I	33-2295 ♦	HP-2004
300	3.5L V6 F/I	33-2295 ♦	HP-2004
300C	2.7L V6 F/I	33-2295	HP-2004
300C	3.0L V6 DSL	33-2304	
300C	3.5L V6 F/I	33-2295	HP-2004
300C	5.7L V8 F/I	33-2295 ♦	HP-2004
300C	6.1L V8 F/I	33-2295 ♦	HP-2004
Neon II	2.0L L4 F/I	E-1006 ♦	
Pacifica	3.5L V6 F/I	33-2283	HP-2004
Pacifica	3.8L V6 F/I	33-2283	HP-2004
PT Cruiser	1.6L L4 F/I	33-2153	
PT Cruiser	2.0L L4 F/I	33-2153 ♦	
PT Cruiser	2.4L L4 F/I	33-2153 ♦	
		33-2153 ♦	
PT Cruiser	2.4L L4 F/I - exc. Turbo	33-2153	HP-1002
PT Cruiser	2.4L L4 F/I - Turbo	33-2153	HP-2009
Sebring	2.4L L4 F/I - DOHC	E-1007	HP-1002
Sebring	2.4L L4 F/I - Non-US	E-1007	
Sebring	2.4L L4 F/I - SOHC	33-2072	HP-1010
Sebring	2.7L V6 F/I	E-1007	HP-2004
Sebring	3.0L V6 F/I	33-2072	HP-1004
Town & Country Van	3.3L V6 F/I	33-2206	HP-2004
Town & Country Van	3.8L V6 F/I	33-2206	HP-2004

2004 CHRYSLER

Vehicle	Engine Type	Air Filter	Oil Filter
300C	3.5L V6 F/I	33-2295	HP-2004
300C	5.7L V8 F/I	33-2295	HP-2004
300M	2.7L V6 F/I	33-2136	
300M	3.5L V6 F/I	33-2136 ♦	HP-2004
Concorde	2.7L V6 F/I	33-2136	HP-2004
Concorde	3.5L V6 F/I	33-2136	HP-2004
Intrepid	2.7L V6 F/I		HP-2004
Intrepid	3.5L V6 F/I		HP-2004
Neon II	2.0L L4 F/I	E-1006 ♦	
Pacifica	3.5L V6 F/I	33-2283	HP-2004
PT Cruiser	1.6L L4 F/I	33-2153	
PT Cruiser	2.0L L4 F/I	33-2153 ♦	
PT Cruiser	2.4L L4 F/I	33-2153 ♦	
		33-2153 ♦	
PT Cruiser	2.4L L4 F/I - exc. Turbo	33-2153	HP-1002
PT Cruiser	2.4L L4 F/I - Turbo	33-2153	HP-2009
Sebring	2.4L L4 F/I	E-1007	
Sebring	2.4L L4 F/I - DOHC	E-1007	HP-1002
Sebring	2.4L L4 F/I - SOHC	E-1007	HP-1010
Sebring	2.7L V6 F/I	E-1007	HP-2004
Sebring	3.0L V6 F/I	33-2072	HP-1004
Stratus	2.4L L4 F/I - Sedan	E-1007	HP-1002
Town & Country Van	3.3L V6 F/I	33-2206	HP-2004
Town & Country Van	3.8L V6 F/I	33-2206	HP-2004

2003 CHRYSLER

Vehicle	Engine Type	Air Filter	Oil Filter
300M	2.7L V6 F/I	33-2136	
300M	3.5L V6 F/I	33-2136 ♦	HP-2004
Concorde	2.7L V6 F/I	33-2136	HP-2004
Concorde	3.5L V6 F/I	33-2136	HP-2004
Intrepid	3.5L V6 F/I	33-2136	HP-2004
PT Cruiser	1.6L L4 F/I	33-2153	
PT Cruiser	2.0L L4 F/I	33-2153 ♦	
PT Cruiser	2.4L L4 F/I	33-2153 ♦	
		33-2153 ♦	
PT Cruiser	2.4L L4 F/I - exc. Turbo	33-2153	HP-1002
PT Cruiser	2.4L L4 F/I - Turbo	33-2153	HP-2009
Sebring	2.4L L4 F/I	33-2072	
Sebring	2.4L L4 F/I - DOHC	33-2072	HP-1002
Sebring	2.4L L4 F/I - Non-US	E-1007	
Sebring	2.4L L4 F/I - SOHC	33-2072	HP-1010
Sebring	2.7L V6 F/I	E-1007	HP-2004
Sebring	3.0L V6 F/I	33-2072	HP-1004
Town & Country Van	3.3L V6 F/I	33-2206	HP-2004
Town & Country Van	3.8L V6 F/I	33-2206	HP-2004
Voyager Van	2.4L L4 F/I	33-2206	HP-1002
Voyager Van	3.3L V6 F/I	33-2206	HP-2004

2002 CHRYSLER

Vehicle	Engine Type	Air Filter	Oil Filter
300M	2.7L V6 F/I	33-2136	
300M	3.5L V6 F/I	33-2136 ♦	HP-2004
Concorde	2.7L V6 F/I	33-2136	HP-2004
Concorde	3.5L V6 F/I	33-2136	HP-2004
Intrepid	2.7L V6 F/I	33-2136	HP-2004
Intrepid	3.5L V6 F/I	33-2136	HP-2004
Neon	2.0L L4 F/I	E-1006 ♦	HP-1002
Neon II	2.0L L4 F/I	E-1006 ♦	HP-1002
Prowler	3.5L V6 F/I	33-2087	HP-2004
PT Cruiser	2.0L L4 F/I	33-2153 ♦	
PT Cruiser	2.4L L4 F/I	33-2153 ♦	HP-1002
Sebring	2.4L L4 F/I - DOHC	E-1007	HP-1002
Sebring	2.4L L4 F/I - Non-US	E-1007	
Sebring	2.4L L4 F/I - SOHC	33-2072	HP-1010
Sebring	2.7L V6 F/I	E-1007	HP-2004
Sebring	3.0L V6 F/I	33-2072	HP-1004

*Indicates 2 filters required ♦ - Intake kit available - see page 80 Applications updated daily at knfilters.com

Vehicle	Engine Type	Air Filter	Oil Filter
2002 CHRYSLER			
Town & Country Van	3.3L V6 F/I	33-2206	HP-2004
Town & Country Van	3.8L V6 F/I	33-2206	HP-2004
Voyager Van	2.4L L4 F/I	33-2206	HP-1002
Voyager Van	3.3L V6 F/I	33-2206	HP-2004
2001 CHRYSLER			
300M	3.5L V6 F/I	33-2136 ♦	HP-2004
Concorde	2.7L V6 F/I	33-2136	HP-2004
Concorde	3.2L V6 F/I	33-2136	HP-2004
LHS	3.5L V6 F/I	33-2136	HP-2004
Neon	2.0L L4 F/I	E-1006 ♦	HP-1002
Neon II	2.0L L4 F/I	E-1006 ♦	HP-1002
Prowler	3.5L V6 F/I		HP-2004
PT Cruiser	2.0L L4 F/I	33-2153 ♦	
PT Cruiser	2.4L L4 F/I	33-2153 ♦	HP-1002
Sebring	2.4L L4 F/I - DOHC	E-1007	HP-1002
Sebring	2.4L L4 F/I - Non-US	E-1007	
Sebring	2.4L L4 F/I - SOHC	33-2072	HP-1010
Sebring	2.7L V6 F/I	E-1007	HP-2004
Sebring	3.0L V6 F/I	33-2072	HP-1004
Town & Country Van	3.3L V6 F/I	33-2206	HP-2004
Town & Country Van	3.8L V6 F/I	33-2206	HP-2004
Voyager Van	3.3L V6 F/I	33-2206	HP-2004
2000 CHRYSLER			
300M	2.7L V6 F/I	33-2136	
300M	3.5L V6 F/I	33-2136 ♦	HP-2004
Cirrus	2.4L L4 F/I	33-2067	HP-1002
Cirrus	2.5L V6 F/I	33-2067	HP-2004
Concorde	2.7L V6 F/I	33-2136	HP-2004
Concorde	3.2L V6 F/I	33-2136	HP-2004
Grand Voyager	3.3L V6 F/I		HP-2004
Intrepid	2.7L V6 F/I		HP-2004
LHS	3.5L V6 F/I	33-2136	HP-2004
Neon	2.0L L4 F/I	E-1006 ♦	HP-1002
Neon II	2.0L L4 F/I	E-1006 ♦	HP-1002
PT Cruiser	2.0L L4 F/I	33-2153 ♦	
PT Cruiser	2.4L L4 F/I	33-2153	HP-1002
Sebring	2.5L V6 F/I - VIN H	33-2067	HP-2004
Sebring	2.5L V6 F/I - VIN N	33-2072	HP-2004
Stratus	2.4L L4 F/I	33-2067	HP-1002
Town & Country Van	3.3L V6 F/I	33-2087	HP-2004
Town & Country Van	3.8L V6 F/I	33-2087	HP-2004
1999 CHRYSLER			
300M	2.7L V6 F/I	33-2136	
300M	3.5L V6 F/I	33-2136	HP-2004
Cirrus	2.5L V6 F/I	33-2067	HP-2004
Concorde	2.7L V6 F/I	33-2136	HP-2004
Concorde	3.2L V6 F/I	33-2136	HP-2004
LHS	3.5L V6 F/I	33-2136	HP-2004
Neon II	2.0L L4 F/I	E-1006 ♦	
Sebring	2.0L L4 F/I	33-2072	HP-2004
Sebring	2.5L V6 F/I - VIN H	33-2067	HP-2004
Sebring	2.5L V6 F/I - VIN N	33-2072	HP-2004
Town & Country Van	3.3L V6 F/I	33-2087	HP-2004
Town & Country Van	3.8L V6 F/I	33-2087	HP-2004
1998 CHRYSLER			
Cirrus	2.5L V6 F/I	33-2067	HP-2004
Concorde	3.2L V6 F/I	33-2136	HP-2004
Sebring	2.4L L4 F/I	33-2067	HP-1002
Sebring	2.5L V6 F/I - VIN H	33-2067	HP-2004
Sebring	2.5L V6 F/I - VIN N	33-2072	HP-2004
Town & Country Van	3.3L V6 F/I	33-2087	HP-2004
Town & Country Van	3.8L V6 F/I	33-2087	HP-2004
1997 CHRYSLER			
Cirrus	2.5L V6 F/I	33-2067	HP-2004
Concorde	3.5L V6 F/I	33-2066-1	HP-2004
Intrepid	3.5L V6 F/I		HP-2004
LHS	3.5L V6 F/I	33-2066-1	HP-2004
Neon	2.0L L4 F/I	33-2087	
Sebring	2.4L L4 F/I	33-2067	HP-1002
Sebring	2.5L V6 F/I - VIN H	33-2067	HP-2004
Sebring	2.5L V6 F/I - VIN N	33-2072	HP-2004
Town & Country Van	3.3L V6 F/I	33-2087	HP-2004
Town & Country Van	3.8L V6 F/I	33-2087	HP-2004
1996 CHRYSLER			
Concorde	3.3L V6 F/I	33-2066-1	HP-2004
Concorde	3.5L V6 F/I	33-2066-1	HP-2004
LHS	3.5L V6 F/I	33-2066-1	HP-2004
Neon	2.0L L4 F/I	33-2087	
Sebring	2.0L L4 F/I	33-2072	HP-2004
Sebring	2.4L L4 F/I		HP-1002
Sebring	2.5L V6 F/I - VIN H	33-2067	HP-2004
Sebring	2.5L V6 F/I - VIN N	33-2072	HP-2004
Town & Country Van	3.8L V6 F/I	33-2087	HP-2004
1995 CHRYSLER			
Cirrus	2.5L V6 F/I	33-2067	HP-2004
Concorde	3.3L V6 F/I	33-2066-1	HP-2004
Concorde	3.5L V6 F/I	33-2066-1	HP-2004
LeBaron	3.0L V6 F/I	33-2002	HP-2004
LHS	3.5L V6 F/I	33-2066-1	HP-2004
New Yorker	3.5L V6 F/I	33-2066-1	HP-2004
Sebring	2.5L V6 F/I	33-2072	HP-2004
1994 CHRYSLER			
Concorde	3.3L V6 F/I	33-2066-1	HP-2004
Concorde	3.5L V6 F/I	33-2066-1	HP-2004
LeBaron	3.0L V6 F/I	33-2002	HP-2004
LHS	3.5L V6 F/I	33-2066-1	HP-2004
New Yorker	3.5L V6 F/I	33-2066-1	HP-2004
Town & Country Van	3.8L V6 F/I		HP-2004
1993 CHRYSLER			
Concorde	3.5L V6 F/I	33-2066-1	HP-2004
LeBaron	3.0L V6 F/I	33-2002	HP-2004
1992 CHRYSLER			
LeBaron	2.5L L4 F/I - Turbo	33-2039	
LeBaron	3.0L V6 F/I	33-2002	HP-2004
New Yorker	3.3L V6 F/I		HP-2004
1991 CHRYSLER			
LeBaron	2.5L L4 F/I - Turbo	33-2039	
LeBaron	3.0L V6 F/I	33-2002	HP-2004
New Yorker	3.3L V6 F/I	33-2002	HP-2004
1990 CHRYSLER			
LeBaron	2.5L L4 F/I - Turbo	33-2039	
LeBaron	3.0L V6 F/I	33-2002	HP-1002
TC Maserati	3.0L V6 F/I	33-2002	HP-1002
1989 CHRYSLER			
Conquest	2.6L L4 F/I	E-2873	HP-1005
LeBaron	2.5L L4 F/I		HP-1002
LeBaron	2.5L L4 F/I - exc. Turbo	E-1923	HP-1002
LeBaron	2.5L L4 F/I - Turbo	33-2006	HP-1002
TC Maserati	2.2L L4 F/I	33-2006	HP-1002
1988 CHRYSLER			
Conquest	2.6L L4 F/I	E-2873	HP-1005
Fifth Avenue	5.2L V8 CARB	E-1100	HP-2004

*Indicates 2 filters required ♦ - Intake kit available - see page 80 Applications updated daily at knfilters.com

Vehicle	Engine Type	Air Filter	Oil Filter
1988 CHRYSLER			
New Yorker	2.2L L4 F/I	33-2006	HP-1002
1987 CHRYSLER			
Conquest	2.6L L4 F/I	E-2873	HP-1005
Fifth Avenue	5.2L V8 CARB	E-1100	HP-2004
LeBaron	2.2L L4 F/I - Turbo	33-2006	
1984 CHRYSLER			
LeBaron	2.2L L4 CARB	33-2006	HP-1002
LeBaron	2.2L L4 F/I - exc. Turbo	33-2002	
LeBaron	2.2L L4 F/I - Turbo	33-2006	
1974 CHRYSLER			
Newport	440 V8 CARB	E-1540	HP-2004
1973 CHRYSLER			
New Yorker	440 V8 CARB	E-1540	HP-2004
1971 CHRYSLER			
New Yorker	440 V8 CARB	E-1540	HP-3001
1970 CHRYSLER			
300	440 V8 CARB	E-1540	
1968 CHRYSLER			
New Yorker	440 V8 CARB	E-1540	
1966 CHRYSLER			
300	383 V8 CARB - exc. Police Package	E-1540	
300	383 V8 CARB - Police Package	E-1957	
300	440 V8 CARB - exc. Police Package	E-1540	
300	440 V8 CARB - Police Package	E-1957	
1963 CHRYSLER			
Imperial	413 V8 CARB	E-1957	HP-3001
1962 CHRYSLER			
Newport	361 V8 CARB	E-1957	
1961 CHRYSLER			
300	413 V8 CARB	E-1957	
1958 CHRYSLER			
300	392 V8 CARB	E-1957	
1957 CHRYSLER			
300	392 V8 CARB	E-1957	
2012 CITROEN			
DS3	1.6L L4 DSL	33-2975	
DS3	1.6L L4 F/I - exc. Turbo	33-2941	
DS3	1.6L L4 F/I - Turbo	33-2936	
2011 CITROEN			
DS3	1.6L L4 DSL	33-2975	
DS3	1.6L L4 F/I - exc. Turbo	33-2941	
DS3	1.6L L4 F/I - Turbo	33-2936	
2010 CITROEN			
C5	2.0L L4 F/I	33-2911	
2009 CITROEN			
Berlingo	1.6L L4 F/I	33-2937 ♦	
C5	2.0L L4 F/I	33-2911	
2008 CITROEN			
C2	1.6L L4 DSL	33-2847 ♦	
C2	1.6L L4 F/I	33-2844 ♦	
C4	1.6L L4 F/I - to 9/08	33-2937 ♦	
C4	2.0L L4 F/I - 140BHP	33-2957 ♦	
C4 Picasso	2.0L L4 F/I	33-2957 ♦	

Vehicle	Engine Type	Air Filter	Oil Filter
2008 CITROEN			
C5	2.0L L4 F/I	33-2911	
C5	3.0L V6 F/I	33-2911	
C8	3.0L V6 F/I	33-2539	
Xsara Picasso	1.6L L4 F/I	33-2937 ♦	
2007 CITROEN			
C4	2.0L L4 F/I - 140BHP	33-2957 ♦	
C4 Picasso	2.0L L4 F/I	33-2957 ♦	
C5	2.0L L4 DSL	33-2928	
C5	2.0L L4 F/I	33-2911	
2006 CITROEN			
C3	1.6L L4 F/I	33-2844 ♦	
C4	2.0L L4 F/I - 140BHP	33-2957 ♦	
C4 Picasso	2.0L L4 F/I	33-2957 ♦	
Xsara Picasso	1.6L L4 F/I	33-2937 ♦	
2005 CITROEN			
C4	1.6L L4 F/I	33-2937 ♦	
C5	3.0L V6 F/I	33-2911	
Jumpy	1.6L L4 F/I	33-2539	
Xsara Picasso	2.0L L4 DSL	33-2813 ♦	
Xsara Picasso	2.0L L4 F/I	33-2813	
2004 CITROEN			
C3	1.4L L4 DSL - 16v	33-2847 ♦	
C3	1.4L L4 DSL - 8v	33-2840 ♦	
C3	1.4L L4 F/I	33-2844 ♦	
C5	2.0L L4 DSL - to 10/04	33-2539	
C5	2.0L L4 F/I - from 11/04	33-2911	
C5	2.0L L4 F/I - to 10/04	33-2539	
2003 CITROEN			
Berlingo	1.9L L4 DSL - DW8B Eng.	E-9256	
Berlingo	1.9L L4 DSL - Exc., DW8B Eng.	E-9252	
2002 CITROEN			
Saxo	1.6L L4 F/I - 8v	33-2772 ♦	
Xsara	2.0L L4 F/I - 163BHP	E-2876 ♦	
Xsara Picasso	2.0L L4 DSL	33-2813 ♦	
2001 CITROEN			
Saxo	1.6L L4 F/I - 8v	33-2227 ♦	
2000 CITROEN			
Jumpy	1.6L L4 F/I	33-2539	
1999 CITROEN			
Jumpy	2.0L L4 DSL	33-2539	
Xsara	1.8L L4 F/I - 16v	33-2781 ♦	
1998 CITROEN			
XM	2.1L L4 DSL	33-2648	
Xsara	2.0L L4 F/I - 132BHP	33-2781 ♦	
Xsara	2.0L L4 F/I - 163BHP	E-2876 ♦	
1997 CITROEN			
AX	1.4L L4 DSL	33-2539	
AX	1.4L L4 F/I	E-9183	
Saxo	1.6L L4 F/I	E-9183 ♦	
1994 CITROEN			
Xantia	1.9L L4 DSL	33-2539	
XM	2.1L L4 DSL	33-2648	
1988 CITROEN			
BX	1.6L L4 F/I	33-2539	
2012 DACIA			
Duster	1.6L L4 F/I	33-2194	

*Indicates 2 filters required ♦ - Intake kit available - see page 80 Applications updated daily at knfilters.com

Vehicle	Engine Type	Air Filter	Oil Filter
2012 DACIA			
Logan	1.6L L4 F/I - 16v	33-2194 ♦	
Logan	1.6L L4 F/I - 8v	E-1150 ♦	
Sandero	1.6L L4 F/I - 16v	33-2194 ♦	
Sandero	1.6L L4 F/I - 8v	E-1150 ♦	
2011 DACIA			
Duster	1.6L L4 F/I	33-2194	
Sandero	1.5L L4 DSL	33-2864	
2010 DACIA			
Logan	1.6L L4 F/I - 16v	33-2194 ♦	
2007 DACIA			
Logan	1.5L L4 DSL	33-2864	
Logan	1.6L L4 F/I - 16v	33-2194 ♦	
Logan	1.6L L4 F/I - 8v	E-1150 ♦	
2006 DACIA			
Logan	1.6L L4 F/I - 16v	33-2194 ♦	
2005 DACIA			
Logan	1.5L L4 DSL	33-2864	
Logan	1.6L L4 F/I - 8v	E-1150 ♦	
2004 DAEWOO			
Matiz	1.0L L4 F/I	33-2827 ♦	
2002 DAEWOO			
Lanos	1.6L L4 F/I	33-2795	HP-1001
Leganza	2.2L L4 F/I	33-2800	HP-1001
2001 DAEWOO			
Lanos	1.4L L4 F/I	33-2795	
Lanos	1.6L L4 F/I	33-2795	HP-1001
Leganza	2.0L L4 F/I	33-2800	
Leganza	2.2L L4 F/I	33-2800	HP-1001
Matiz	0.8L L3 F/I	33-2827	
Nubira	2.0L L4 F/I	33-2802	HP-1001
2000 DAEWOO			
Lanos	1.6L L4 F/I	33-2795	HP-1001
Leganza	2.0L L4 F/I	33-2800	
Leganza	2.2L L4 F/I	33-2800	HP-1001
Matiz	0.8L L3 F/I	33-2827	
Nubira	2.0L L4 F/I	33-2802	HP-1001
1999 DAEWOO			
Lanos	1.4L L4 F/I	33-2795	
Lanos	1.6L L4 F/I	33-2795	HP-1001
Leganza	2.2L L4 F/I	33-2800	HP-1001
Matiz	0.8L L3 F/I	33-2827	
Nubira	2.0L L4 F/I	33-2802	HP-1001
1997 DAEWOO			
Nexia	1.5L L4 F/I	33-2548-A	
2012 DAIHATSU			
Terios	1.5L L4 F/I - Non-US	33-2967	
2011 DAIHATSU			
Terios	1.5L L4 F/I - Non-US	33-2967	
Terios	1.5L L4 F/I - US	33-2989	
2010 DAIHATSU			
Materia	1.5L L4 F/I	33-2967 ♦	
Terios	1.5L L4 F/I - Non-US	33-2967	
Terios	1.5L L4 F/I - US	33-2989	
Xenia	1.5L L4 F/I	33-2989	
2009 DAIHATSU			
Materia	1.5L L4 F/I	33-2967 ♦	
2009 DAIHATSU			
Sirion	1.5L L4 F/I - OEM 17801B1010	33-2967	
Terios	1.5L L4 F/I - Non-US	33-2967	
Terios	1.5L L4 F/I - US	33-2989	
2008 DAIHATSU			
Materia	1.3L L4 F/I	33-2967 ♦	
Sirion	1.5L L4 F/I - OEM 17801B1010	33-2967	
Terios	1.5L L4 F/I - Non-US	33-2967	
Terios	1.5L L4 F/I - US	33-2989	
2007 DAIHATSU			
Terios	1.5L L4 F/I - Non-US	33-2967	
Terios	1.5L L4 F/I - US	33-2989	
2006 DAIHATSU			
Terios	1.5L L4 F/I - Non-US	33-2967	
Terios	1.5L L4 F/I - US	33-2989	
Xenia	1.5L L4 F/I	33-2989	
2004 DAIHATSU			
Terios	1.5L L4 F/I	33-2989	
1994 DAIHATSU			
Mira	.66L L3 F/I - Turbo	33-2633	
1993 DAIHATSU			
Fourtrak	2.8L L4 DSL - Turbo	38-9070	
1992 DAIHATSU			
Rocky	2.8L L4 DSL	38-9070	
1991 DAIHATSU			
Feroza	1.6L L4 CARB	E-9191	
1982 DAIHATSU			
Charade	1.0L L3 F/I	E-9173	
1980 DAIHATSU			
Charade	1.0L L3 F/I	E-9173	
1999 DAIMLER			
V8 Super	4.0L V8 F/I	33-2190	
2013 DODGE			
Avenger	2.4L L4 F/I	33-2373	HP-1017
Avenger	3.6L V6 F/I	33-2470	
Cargo Van	3.6L V6 F/I	33-2462	
Challenger	3.6L V6 F/I	33-2460 ♦	
Challenger	5.7L V8 F/I	33-2460 ♦	HP-2010
Challenger	6.4L V8 F/I	33-2460 ♦	HP-2010
Charger	3.6L V6 F/I	33-2460 ♦	
Charger	5.7L V8 F/I	33-2460 ♦	HP-2010
Charger	6.4L V8 F/I	33-2460 ♦	HP-2010
Dart	1.4L L4 F/I	33-2491	
Dart	2.0L L4 F/I	33-2491	HP-1017
Durango	3.6L V6 F/I	33-2457 ♦	
Durango	5.7L V8 F/I	33-2457 ♦	HP-2010
Grand Caravan	3.6L V6 F/I	33-2462	
Journey	2.4L L4 F/I	33-2423	HP-1017
Journey	3.6L V6 F/I	33-2470	
Ram 1500	3.6L V6 F/I	33-2247	
Ram 1500	4.7L V8 F/I	33-2247	
Ram 1500	5.7L V8 F/I	33-2247	HP-2010
Ram 2500 Pickup	5.7L V8 F/I	33-2247	HP-2010
Ram 2500 Pickup	6.7L V8 DSL	E-0787	HP-4003
Ram 3500 Pickup	6.7L V8 DSL	E-0787	HP-4003
Viper	8.4L V10 F/I	33-2432	

*Indicates 2 filters required ♦ - Intake kit available - see page 80 Applications updated daily at knfilters.com

Vehicle	Engine Type	Air Filter	Oil Filter
2012 DODGE			
Avenger	2.4L L4 F/I	33-2373	HP-1017
Avenger	3.6L V6 F/I	33-2470	
Caliber	2.0L L4 F/I	E-1998	HP-1017
Caliber	2.4L L4 F/I		HP-1017
Cargo Van	3.6L V6 F/I	33-2462	
Challenger	3.6L V6 F/I	33-2460 ♦	
Challenger	5.7L V8 F/I	33-2460 ♦	HP-2010
Challenger	6.4L V8 F/I	33-2460 ♦	HP-2010
Charger	3.6L V6 F/I	33-2460 ♦	
Charger	5.7L V8 F/I	33-2460 ♦	HP-2010
Charger	6.4L V8 F/I	33-2460 ♦	HP-2010
Durango	3.6L V6 F/I	33-2457 ♦	
Durango	5.7L V8 F/I	33-2457 ♦	HP-2010
Grand Caravan	3.6L V6 F/I	33-2462	
Journey	2.4L L4 F/I	33-2423	HP-1017
Journey	3.6L V6 F/I	33-2470	
Ram 1500 Pickup	3.7L V6 F/I	33-2247	HP-2011
Ram 1500 Pickup	4.7L V8 F/I	33-2247 ♦	HP-2010
Ram 1500 Pickup	5.7L V8 F/I	33-2247 ♦	HP-2010
Ram 2500 Pickup	5.7L V8 F/I	33-2247	HP-2010
Ram 2500 Pickup	6.7L L6 DSL	E-0787 ♦	HP-4003
Ram 3500 Pickup	5.7L V8 F/I	33-2247	HP-2010
Ram 3500 Pickup	6.7L L6 DSL	E-0787 ♦	HP-4003
Ram 4500	6.7L L6 DSL	E-0787	HP-4003
Ram 5500	6.7L L6 DSL	E-0787	HP-4003
2011 DODGE			
Avenger	2.4L L4 F/I	33-2373	HP-1017
Avenger	3.6L V6 F/I	33-2470	
Caliber	2.0L L4 F/I	E-1998	HP-1017
Caliber	2.4L L4 F/I	E-1998	HP-1017
Challenger	3.6L V6 F/I	33-2460 ♦	
Challenger	5.7L V8 F/I	33-2460 ♦	HP-2010
Challenger	6.4L V8 F/I	33-2460 ♦	HP-2010
Charger	3.6L V6 F/I	33-2460 ♦	
Charger	5.7L V8 F/I	33-2460 ♦	HP-2010
Dakota	3.7L V6 F/I	33-2175	HP-2011
Dakota	4.7L V8 F/I	33-2175	HP-2010
Durango	3.6L V6 F/I	33-2457 ♦	
Durango	5.7L V8 F/I	33-2457 ♦	HP-2010
Grand Caravan	3.6L V6 F/I	33-2462	
Journey	2.0L L4 DSL	33-2423	
Journey	2.4L L4 F/I	33-2423	HP-1017
Journey	2.7L V6 F/I	33-2423	
Journey	3.6L V6 F/I	33-2470	
Nitro	3.7L V6 F/I	33-2363 ♦	HP-2011
Nitro	4.0L V6 F/I	33-2363 ♦	HP-1017
Ram 1500 Pickup	3.7L V6 F/I	33-2247 ♦	HP-2011
Ram 1500 Pickup	4.7L V8 F/I	33-2247 ♦	HP-2010
Ram 1500 Pickup	5.7L V8 F/I	33-2247 ♦	HP-2010
Ram 2500 Pickup	5.7L V8 F/I	33-2247	HP-2010
Ram 2500 Pickup	6.7L L6 DSL	E-0787 ♦	HP-4003
Ram 3500 Pickup	5.7L V8 F/I	33-2247	HP-2010
Ram 3500 Pickup	6.7L L6 DSL	E-0787 ♦	HP-4003
Ram 4500	6.7L L6 DSL	E-0787	HP-4003
Ram 5500	6.7L L6 DSL	E-0787	HP-4003
2010 DODGE			
Avenger	2.0L L4 DSL	33-2373	
Avenger	2.4L L4 F/I	33-2373 ♦	HP-1017
Avenger	2.7L V6 F/I	33-2373	HP-1017
Avenger	3.5L V6 F/I	33-2373 ♦	HP-1017
Caliber	1.8L L4 F/I	33-2362 ♦	
Caliber	2.0L L4 DSL	33-2362	
Caliber	2.0L L4 F/I	33-2362 ♦	HP-1017

Vehicle	Engine Type	Air Filter	Oil Filter
2010 DODGE			
Caliber	2.4L L4 F/I	33-2362 ♦	HP-1017
Challenger	3.5L V6 F/I	33-2295 ♦	HP-1017
Challenger	5.7L V8 F/I	33-2295 ♦	HP-2010
Challenger	6.1L V8 F/I	33-2295 ♦	HP-2010
Charger	2.7L V6 F/I	33-2295 ♦	HP-1017
Charger	3.5L V6 F/I	33-2295 ♦	HP-1017
Charger	5.7L V8 F/I	33-2295 ♦	HP-2010
Charger	6.1L V8 F/I	33-2295 ♦	HP-2010
Dakota	3.7L V6 F/I	33-2175	HP-2011
Dakota	4.7L V8 F/I	33-2175 ♦	HP-2010
Grand Caravan	3.3L V6 F/I	33-2419	HP-1002
Grand Caravan	3.8L V6 F/I	33-2419	HP-1002
Grand Caravan	4.0L V6 F/I	33-2419	HP-1017
Journey	2.0L L4 DSL	33-2423	
Journey	2.4L L4 F/I	33-2423	HP-1017
Journey	2.7L V6 F/I	33-2423	
Journey	3.5L V6 F/I	33-2423	HP-1017
Nitro	2.0L L4 DSL	33-2363	
Nitro	3.7L V6 F/I	33-2363 ♦	HP-2011
Nitro	4.0L V6 F/I	33-2363 ♦	HP-1017
Ram 1500 Pickup	3.7L V6 F/I	33-2247 ♦	HP-2011
Ram 1500 Pickup	4.7L V8 F/I	33-2247 ♦	HP-2010
Ram 1500 Pickup	5.7L V8 F/I	33-2247 ♦	HP-2010
Ram 2500 Pickup	5.7L V8 F/I	33-2247	HP-2010
Ram 2500 Pickup	5.9L L6 DSL		HP-4003
Ram 2500 Pickup	6.7L L6 DSL	E-0787 ♦	HP-4003
Ram 3500 Pickup	5.7L V8 F/I		HP-2010
Ram 3500 Pickup	6.7L L6 DSL	E-0787 ♦	HP-4003
Ram 4500	6.7L L6 DSL		HP-4003
Ram 5500	6.7L L6 DSL		HP-4003
Viper	8.4L V10 F/I	33-2432 ♦	HP-2010
2009 DODGE			
Avenger	2.0L L4 DSL	33-2373	
Avenger	2.4L L4 F/I	33-2373 ♦	HP-1017
Avenger	2.7L V6 F/I	33-2373	HP-2010
Avenger	3.5L V6 F/I	33-2373 ♦	HP-2010
Caliber	1.8L L4 F/I	33-2362 ♦	HP-1017
Caliber	2.0L L4 DSL	33-2362	
Caliber	2.0L L4 F/I	33-2362 ♦	HP-1017
Caliber	2.4L L4 F/I	33-2362 ♦	HP-1017
Caliber SRT-4	2.4L L4 F/I	E-1988 ♦	HP-2010
Challenger	3.5L V6 F/I	33-2295 ♦	HP-1017
Challenger	5.7L V8 F/I	33-2295 ♦	HP-2010
Challenger	6.1L V8 F/I	33-2295 ♦	HP-2010
Charger	2.7L V6 F/I	33-2295 ♦	HP-1017
Charger	3.5L V6 F/I	33-2295 ♦	HP-2010
Charger	5.7L V8 F/I	33-2295 ♦	HP-2010
Charger	6.1L V8 F/I	33-2295 ♦	HP-2010
Dakota	3.7L V6 F/I	33-2175	HP-2011
Dakota	4.7L V8 F/I	33-2175 ♦	HP-2010
Durango	3.7L V6 F/I	33-2288	HP-2011
Durango	4.7L V8 F/I	33-2288 ♦	HP-2010
Durango	5.7L V8 F/I	33-2288 ♦	HP-2010
Durango Hybrid	5.7L V8 F/I	E-1991	HP-2010
Grand Caravan	3.3L V6 F/I	33-2419	HP-1002
Grand Caravan	3.8L V6 F/I	33-2419	HP-1002
Grand Caravan	4.0L V6 F/I	33-2419	HP-1017
Journey	2.0L L4 DSL	33-2423	
Journey	2.4L L4 F/I	33-2423	HP-1017
Journey	2.7L V6 F/I	33-2423	
Journey	3.5L V6 F/I	33-2423	HP-1017
Nitro	2.0L L4 DSL	33-2363	
Nitro	3.7L V6 F/I	33-2363	HP-2011

*Indicates 2 filters required ♦ - Intake kit available - see page 80 Applications updated daily at knfilters.com

Vehicle	Engine Type	Air Filter	Oil Filter
2009 DODGE			
Nitro	4.0L V6 F/I	33-2363 ♦	HP-1017
Ram 1500 Pickup	3.7L V6 F/I	33-2247 ♦	HP-2011
Ram 1500 Pickup	4.7L V8 F/I	33-2247 ♦	HP-2010
Ram 1500 Pickup	5.7L V8 F/I	33-2247 ♦	HP-2010
Ram 2500 Pickup	5.7L V8 F/I	33-2247	HP-2010
Ram 2500 Pickup	5.9L L6 DSL	E-0776	HP-4003
Ram 2500 Pickup	6.7L L6 DSL	E-0784 ♦	HP-4003
Ram 3500 Pickup	5.7L V8 F/I	33-2247	HP-2010
Ram 3500 Pickup	5.9L L6 DSL	E-0776	HP-4003
Ram 3500 Pickup	6.7L L6 DSL	E-0784 ♦	HP-4003
Ram 4500	6.7L L6 DSL		HP-4003
Ram 5500	6.7L L6 DSL		HP-4003
Sprinter 2500	3.0L V6 DSL	33-2391	
Sprinter 2500	3.5L V6 F/I	33-2391	
Sprinter 3500	3.0L V6 DSL	33-2391	
Sprinter 3500	3.5L V6 F/I	33-2391	
Viper	8.4L V10 F/I	33-2432 ♦	HP-2010
2008 DODGE			
Avenger	2.0L L4 DSL	33-2373	
Avenger	2.4L L4 F/I	33-2373 ♦	HP-1017
Avenger	2.7L V6 F/I	33-2373	HP-2010
Avenger	3.5L V6 F/I	33-2373 ♦	
Avenger	3.5L V6 F/I - 22mm Thread	33-2373	HP-2010
Avenger	3.5L V6 F/I - 3/4 thread	33-2373	HP-2004
Caliber	1.8L L4 F/I	33-2362 ♦	HP-1017
Caliber	2.0L L4 DSL	33-2362	
Caliber	2.0L L4 F/I	33-2362 ♦	HP-1017
Caliber	2.4L L4 F/I	33-2362 ♦	HP-1017
Caliber SRT-4	2.4L L4 F/I	E-1988 ♦	HP-2010
Caravan	3.3L V6 F/I	33-2419	
Challenger	6.1L V8 F/I	33-2295 ♦	HP-2010
Charger	2.7L V6 F/I	33-2295 ♦	HP-2010
Charger	3.5L V6 F/I	33-2295 ♦	HP-2010
Charger	5.7L V8 F/I	33-2295 ♦	HP-2010
Charger	6.1L V8 F/I	33-2295 ♦	HP-2010
Dakota	3.7L V6 F/I	33-2175 ♦	HP-2009
Dakota	4.7L V8 F/I	33-2175 ♦	HP-2010
Durango	3.7L V6 F/I	33-2288	HP-2009
Durango	4.7L V8 F/I	33-2288 ♦	HP-2010
Durango	5.7L V8 F/I	33-2288 ♦	HP-2010
Grand Caravan	3.3L V6 F/I	33-2419	HP-1002
Grand Caravan	3.8L V6 F/I	33-2419	HP-1002
Grand Caravan	4.0L V6 F/I	33-2419	HP-2004
Journey	2.4L L4 F/I	33-2423	
Journey	2.7L V6 F/I	33-2423	
Magnum	2.7L V6 F/I	33-2295 ♦	HP-2010
Magnum	3.5L V6 F/I	33-2295 ♦	HP-2010
Magnum	5.7L V8 F/I	33-2295 ♦	HP-2010
Magnum	6.1L V8 F/I	33-2295 ♦	HP-2010
Nitro	2.8L L4 DSL	33-2363	
Nitro	3.7L V6 F/I	33-2363 ♦	HP-2009
Nitro	4.0L V6 F/I	33-2363 ♦	HP-2004
Ram 1500 Pickup	3.7L V6 F/I	33-2247 ♦	HP-2009
Ram 1500 Pickup	4.7L V8 F/I	33-2247 ♦	HP-2010
Ram 1500 Pickup	5.7L V8 F/I	33-2247 ♦	HP-2010
Ram 2500 Pickup	5.7L V8 F/I	33-2247 ♦	HP-2010
Ram 2500 Pickup	5.9L L6 DSL	E-0776	HP-4003
Ram 2500 Pickup	6.7L L6 DSL	E-0784 ♦	HP-4003
Ram 3500 Pickup	5.7L V8 F/I	33-2247 ♦	HP-2010
Ram 3500 Pickup	5.9L L6 DSL	E-0776	HP-4003
Ram 3500 Pickup	6.7L L6 DSL	E-0784 ♦	HP-4003
Ram 4500	6.7L L6 DSL		HP-4003
Ram 5500	6.7L L6 DSL		HP-4003

Vehicle	Engine Type	Air Filter	Oil Filter
2008 DODGE			
Sprinter 2500	3.0L V6 DSL	33-2391	
Sprinter 3500	3.0L V6 DSL	33-2391	
Viper	8.4L V10 F/I	33-2432 ♦	
2007 DODGE			
Avenger	2.0L L4 DSL	33-2373	
Caliber	1.8L L4 F/I	33-2362 ♦	HP-1017
Caliber	2.0L L4 DSL	33-2362	
Caliber	2.0L L4 F/I	33-2362 ♦	HP-1017
Caliber	2.4L L4 F/I	33-2362 ♦	HP-1017
Caravan	2.4L L4 F/I	33-2206	HP-1002
Caravan	3.3L V6 F/I	33-2206	HP-1002
Charger	2.7L V6 F/I	33-2295 ♦	HP-2004
Charger	3.5L V6 F/I	33-2295 ♦	HP-2004
Charger	5.7L V8 F/I	33-2295 ♦	HP-2004
Charger	6.1L V8 F/I	33-2295 ♦	HP-2004
Dakota	3.7L V6 F/I	33-2175 ♦	HP-2009
Dakota	4.7L V8 F/I	33-2175 ♦	HP-2004
Durango	3.7L V6 F/I	33-2288	HP-2009
Durango	4.7L V8 F/I	33-2288 ♦	HP-2004
Durango	5.7L V8 F/I	33-2288 ♦	HP-2004
Grand Caravan	3.3L V6 F/I	33-2206	HP-1002
Grand Caravan	3.8L V6 F/I	33-2206	HP-1002
Magnum	2.7L V6 F/I	33-2295 ♦	HP-2004
Magnum	3.5L V6 F/I	33-2295 ♦	HP-2004
Magnum	5.7L V8 F/I	33-2295 ♦	HP-2004
Magnum	6.1L V8 F/I	33-2295 ♦	HP-2004
Nitro	2.8L L4 DSL	33-2363	
Nitro	3.7L V6 F/I	33-2363 ♦	HP-2009
Nitro	4.0L V6 F/I	33-2363 ♦	HP-2004
Ram 1500 Pickup	3.7L V6 F/I	33-2247 ♦	HP-2009
Ram 1500 Pickup	4.7L V8 F/I	33-2247 ♦	HP-2004
Ram 1500 Pickup	5.7L V8 F/I	33-2247 ♦	HP-2004
Ram 2500 Pickup	5.7L V8 F/I	33-2247 ♦	HP-2004
Ram 2500 Pickup	5.9L L6 DSL	E-0776 ♦	HP-4003
Ram 2500 Pickup	6.7L L6 DSL	E-0784 ♦	HP-4003
Ram 3500 Pickup	5.7L V8 F/I	33-2247 ♦	HP-2004
Ram 3500 Pickup	5.9L L6 DSL	E-0776 ♦	HP-4003
Ram 3500 Pickup	6.7L L6 DSL	E-0784 ♦	HP-4003
Ram SRT-10	8.3L V10 F/I	33-2297	HP-2004
Sprinter 2500	3.0L V6 DSL	33-2391	
Sprinter 3500	3.0L V6 DSL	33-2391	
2006 DODGE			
Caliber	1.8L L4 F/I	33-2362	HP-1017
Caliber	2.0L L4 DSL	33-2362	
Caliber	2.0L L4 F/I	33-2362	HP-1017
Caliber	2.4L L4 F/I	33-2362	HP-1017
Caravan	2.4L L4 F/I	33-2206	HP-1002
Caravan	3.3L V6 F/I	33-2206	HP-2004
Charger	2.7L V6 F/I	33-2295 ♦	HP-2004
Charger	3.5L V6 F/I	33-2295 ♦	HP-2004
Charger	5.7L V8 F/I	33-2295 ♦	HP-2004
Charger	6.1L V8 F/I	33-2295 ♦	HP-2004
Dakota	3.7L V6 F/I	33-2175 ♦	HP-2009
Dakota	4.7L V8 F/I	33-2175 ♦	HP-2004
Durango	3.7L V6 F/I	33-2288	HP-2009
Durango	4.7L V8 F/I	33-2288 ♦	HP-2004
Durango	5.7L V8 F/I	33-2288 ♦	HP-2004
Grand Caravan	3.3L V6 F/I	33-2206	HP-2004
Grand Caravan	3.8L V6 F/I	33-2206	HP-2004
Magnum	2.7L V6 F/I	33-2295 ♦	HP-2004
Magnum	3.5L V6 F/I	33-2295 ♦	HP-2004
Magnum	5.7L V8 F/I	33-2295 ♦	HP-2004
Magnum	6.1L V8 F/I	33-2295 ♦	HP-2004

*Indicates 2 filters required ♦ - Intake kit available - see page 80 Applications updated daily at knfilters.com

Vehicle	Engine Type	Air Filter	Oil Filter
2006 DODGE			
Ram 1500 Pickup	3.7L V6 F/I	33-2247 ♦	HP-2009
Ram 1500 Pickup	4.7L V8 F/I	33-2247 ♦	HP-2004
Ram 1500 Pickup	5.7L V8 F/I	33-2247 ♦	HP-2004
Ram 2500 Pickup	5.7L V8 F/I	33-2247 ♦	HP-2004
Ram 2500 Pickup	5.9L L6 DSL	E-0776 ♦	HP-4003
Ram 3500 Pickup	5.7L V8 F/I	33-2247 ♦	HP-2004
Ram 3500 Pickup	5.9L L6 DSL	E-0776 ♦	HP-4003
Ram SRT-10	8.3L V10 F/I	33-2297 ♦	HP-2004
Stratus	2.0L L4 F/I		HP-1002
Stratus	2.4L L4 F/I	E-1007	HP-1002
Stratus	2.7L V6 F/I	E-1007	HP-2004
Viper	8.3L V10 F/I		HP-2004
2005 DODGE			
Caravan	2.4L L4 F/I	33-2206	HP-1002
Caravan	3.3L V6 F/I	33-2206	HP-2004
Dakota	3.7L V6 F/I	33-2175 ♦	HP-2009
Dakota	4.7L V8 F/I	33-2175 ♦	HP-2004
Durango	3.7L V6 F/I	33-2288	HP-2009
Durango	4.7L V8 F/I	33-2288 ♦	HP-2004
Durango	5.7L V8 F/I	33-2288 ♦	HP-2004
Grand Caravan	3.3L V6 F/I	33-2206	HP-2004
Grand Caravan	3.8L V6 F/I	33-2206	HP-2004
Magnum	2.7L V6 F/I	33-2295 ♦	HP-2004
Magnum	3.5L V6 F/I	33-2295 ♦	HP-2004
Magnum	5.7L V8 F/I	33-2295 ♦	HP-2004
Neon	2.0L L4 F/I	E-1006 ♦	HP-1002
Neon SRT-4	2.4L L4 F/I	E-1006 ♦	HP-2009
Ram 1500 Pickup	3.7L V6 F/I	33-2247 ♦	HP-2009
Ram 1500 Pickup	4.7L V8 F/I	33-2247 ♦	HP-2004
Ram 1500 Pickup	5.7L V8 F/I	33-2247 ♦	HP-2004
Ram 2500 Pickup	5.7L V8 F/I	33-2247 ♦	HP-2004
Ram 2500 Pickup	5.9L L6 DSL	E-0776 ♦	HP-4003
Ram 3500 Pickup	5.7L V8 F/I	33-2247 ♦	HP-2004
Ram 3500 Pickup	5.9L L6 DSL	E-0776 ♦	HP-4003
Ram SRT-10	8.3L V10 F/I	33-2297 ♦	HP-2004
Stratus	2.0L L4 F/I		HP-1002
Stratus	2.4L L4 F/I - Coupe	33-2072	HP-1010
Stratus	2.4L L4 F/I - Sedan	E-1007	HP-1002
Stratus	2.7L V6 F/I	E-1007	HP-2004
Stratus	3.0L V6 F/I	33-2072	HP-1004
SX 2.0	2.0L L4 F/I	E-1006	HP-1002
Viper	8.3L V10 F/I		HP-2004
2004 DODGE			
Caravan	2.4L L4 F/I	33-2206	HP-1002
Caravan	3.3L V6 F/I	33-2206	HP-2004
Dakota	3.7L V6 F/I	33-2175	HP-2009
Dakota	4.7L V8 F/I	33-2175 ♦	HP-2004
Durango	3.7L V6 F/I	33-2288	HP-2009
Durango	4.7L V8 F/I	33-2288 ♦	HP-2004
Durango	5.7L V8 F/I	33-2288 ♦	HP-2004
Grand Caravan	3.3L V6 F/I	33-2206	HP-2004
Grand Caravan	3.8L V6 F/I	33-2206	HP-2004
Intrepid	2.7L V6 F/I	33-2136 ♦	HP-2004
Intrepid	3.5L V6 F/I	33-2136	HP-2004
Intrepid SXT	3.5L V6 F/I		HP-2004
Neon	2.0L L4 F/I	E-1006 ♦	HP-1002
Neon SRT-4	2.4L L4 F/I	E-1006 ♦	HP-2009
Ram 1500 Pickup	3.7L V6 F/I	33-2247 ♦	HP-2009
Ram 1500 Pickup	4.7L V8 F/I	33-2247 ♦	HP-2004
Ram 1500 Pickup	5.7L V8 F/I	33-2247 ♦	HP-2004
Ram 2500 Pickup	5.7L V8 F/I	33-2247 ♦	HP-2004
Ram 2500 Pickup	5.9L L6 DSL	E-0776 ♦	HP-4003
Ram 3500 Pickup	5.7L V8 F/I	33-2247 ♦	HP-2004
Ram 3500 Pickup	5.9L L6 DSL	E-0776 ♦	HP-4003
Ram SRT-10	8.3L V10 F/I	33-2297 ♦	HP-2004
Stratus	2.0L L4 F/I		HP-1002
Stratus	2.4L L4 F/I - Coupe	33-2072	HP-1010
Stratus	2.4L L4 F/I - Sedan	E-1007	HP-1002
Stratus	2.7L V6 F/I	E-1007	HP-2004
Stratus	3.0L V6 F/I	33-2072	HP-1004
SX 2.0	2.0L L4 F/I	E-1006	HP-1002
Viper	8.3L V10 F/I		HP-2004
2003 DODGE			
Caravan	2.4L L4 F/I	33-2206	HP-1002
Caravan	3.3L V6 F/I	33-2206	HP-2004
Dakota	3.9L V6 F/I	33-2175	HP-2004
Dakota	4.7L V8 F/I	33-2175 ♦	HP-2004
Dakota	5.9L V8 F/I	33-2175 ♦	HP-2004
Durango	4.7L V8 F/I	33-2175 ♦	HP-2004
Durango	5.9L V8 F/I	33-2175 ♦	HP-2004
Grand Caravan	3.3L V6 F/I	33-2206	HP-2004
Grand Caravan	3.8L V6 F/I	33-2206	HP-2004
Intrepid	2.7L V6 F/I	33-2136 ♦	HP-2004
Intrepid	3.5L V6 F/I	33-2136 ♦	HP-2004
Neon	2.0L L4 F/I	E-1006 ♦	HP-1002
Neon R/T	2.0L L4 F/I	E-1006 ♦	HP-1002
Neon SRT-4	2.4L L4 F/I	E-1006 ♦	HP-2009
Ram 1500 Pickup	3.7L V6 F/I	33-2247 ♦	HP-2009
Ram 1500 Pickup	4.7L V8 F/I	33-2247 ♦	HP-2004
Ram 1500 Pickup	5.7L V8 F/I	33-2247 ♦	HP-2004
Ram 1500 Pickup	5.9L V8 F/I	33-2247 ♦	HP-2004
Ram 1500 Van	3.9L V6 F/I	E-1100	HP-2004
Ram 1500 Van	5.2L V8 F/I	E-1100	HP-2004
Ram 1500 Van	5.9L V8 F/I	E-1100	HP-2004
Ram 2500 Pickup	5.7L V8 F/I	33-2247 ♦	HP-2004
Ram 2500 Pickup	5.9L L6 DSL	E-0776 ♦	HP-4003
Ram 2500 Pickup	8.0L V10 F/I	33-2247	HP-2004
Ram 2500 Van	5.2L V8 F/I	E-1100	HP-2004
Ram 2500 Van	5.9L V8 F/I	E-1100	HP-2004
Ram 3500 Pickup	5.7L V8 F/I	33-2247 ♦	HP-2004
Ram 3500 Pickup	5.9L L6 DSL	E-0776 ♦	HP-4003
Ram 3500 Pickup	8.0L V10 F/I	33-2247	HP-2004
Ram 3500 Van	5.9L V8 F/I	E-1100	HP-2004
Stratus	2.0L L4 F/I		HP-1002
Stratus	2.4L L4 F/I - Coupe	33-2072	HP-1010
Stratus	2.4L L4 F/I - Sedan	E-1007	HP-1002
Stratus	2.7L V6 F/I	E-1007	HP-2004
Stratus	3.0L V6 F/I	33-2072	HP-1004
SX 2.0	2.0L L4 F/I		HP-1002
Viper	8.3L V10 F/I		HP-2004
2002 DODGE			
Caravan	2.4L L4 F/I	33-2206	HP-1002
Caravan	3.3L V6 F/I	33-2206	HP-2004
Dakota	2.5L L4 F/I	33-2175	HP-2004
Dakota	3.9L V6 F/I	33-2175	HP-2004
Dakota	4.7L V8 F/I	33-2175 ♦	HP-2004
Dakota	5.9L V8 F/I	33-2175 ♦	HP-2004
Durango	4.7L V8 F/I	33-2175 ♦	HP-2004
Durango	5.9L V8 F/I	33-2175 ♦	HP-2004
Grand Caravan	3.3L V6 F/I	33-2206	HP-2004
Grand Caravan	3.8L V6 F/I	33-2206	HP-2004
Intrepid	2.7L V6 F/I	33-2136 ♦	HP-2004
Intrepid	3.5L V6 F/I	33-2136 ♦	HP-2004
Neon	2.0L L4 F/I	E-1006 ♦	HP-1002
Neon ACR	2.0L L4 F/I	E-1006 ♦	HP-1002
Neon R/T	2.0L L4 F/I	E-1006 ♦	HP-1002

*Indicates 2 filters required ♦ - Intake kit available - see page 80 Applications updated daily at knfilters.com

Vehicle	Engine Type	Air Filter	Oil Filter
2002 DODGE			
Ram 1500 Pickup	3.7L V6 F/I	33-2247 ♦	HP-2009
Ram 1500 Pickup	4.7L V8 F/I	33-2247 ♦	HP-2004
Ram 1500 Pickup	5.9L V8 F/I	33-2247 ♦	HP-2004
Ram 1500 Van	3.9L V6 F/I	E-1100	HP-2004
Ram 1500 Van	5.2L V8 F/I	E-1100	HP-2004
Ram 1500 Van	5.9L V8 F/I	E-1100	HP-2004
Ram 2500 Pickup	5.9L L6 DSL	33-2056 ♦	HP-4003
Ram 2500 Pickup	5.9L V8 F/I	33-2084 ♦	HP-2004
Ram 2500 Pickup	8.0L V10 F/I	33-2058 ♦	HP-2004
Ram 2500 Van	5.2L V8 F/I	E-1100	HP-2004
Ram 2500 Van	5.9L V8 F/I	E-1100	HP-2004
Ram 3500 Pickup	5.9L L6 DSL	33-2056 ♦	HP-4003
Ram 3500 Pickup	5.9L V8 F/I	33-2084	HP-2004
Ram 3500 Pickup	8.0L V10 F/I	33-2058 ♦	HP-2004
Ram 3500 Van	5.9L V8 F/I	E-1100	HP-2004
Stratus	2.4L L4 F/I - Coupe	33-2072	HP-1010
Stratus	2.4L L4 F/I - Sedan	E-1007	HP-1002
Stratus	2.7L V6 F/I	E-1007	HP-2004
Stratus	3.0L V6 F/I	33-2072	HP-1004
Viper	8.0L V10 F/I	33-2085*	HP-2004
2001 DODGE			
Caravan	2.4L L4 F/I	33-2206	HP-1002
Caravan	3.3L V6 F/I	33-2206	HP-2004
Dakota	2.5L L4 F/I	33-2175	HP-2004
Dakota	3.9L V6 F/I	33-2175	HP-2004
Dakota	4.7L V8 F/I	33-2175 ♦	HP-2004
Dakota	5.9L V8 F/I	33-2175 ♦	HP-2004
Durango	4.7L V8 F/I	33-2175 ♦	HP-2004
Durango	5.9L V8 F/I	33-2175 ♦	HP-2004
Grand Caravan	3.3L V6 F/I	33-2206	HP-2004
Grand Caravan	3.8L V6 F/I	33-2206	HP-2004
Intrepid	2.7L V6 F/I	33-2136 ♦	HP-2004
Intrepid	3.2L V6 F/I	33-2136	HP-2004
Intrepid	3.5L V6 F/I	33-2136 ♦	HP-2004
Neon	2.0L L4 F/I	E-1006 ♦	HP-1002
Neon ACR	2.0L L4 F/I	E-1006 ♦	HP-1002
Neon R/T	2.0L L4 F/I	E-1006 ♦	HP-1002
Ram 1500 Pickup	3.9L V6 F/I	33-2084 ♦	HP-2004
Ram 1500 Pickup	5.2L V8 F/I	33-2084 ♦	HP-2004
Ram 1500 Pickup	5.9L V8 F/I	33-2084 ♦	HP-2004
Ram 1500 Van	3.9L V6 F/I	E-1100	HP-2004
Ram 1500 Van	5.2L V8 F/I	E-1100	HP-2004
Ram 1500 Van	5.9L V8 F/I	E-1100	HP-2004
Ram 2500 Pickup	5.9L L6 DSL	33-2056 ♦	HP-4003
Ram 2500 Pickup	5.9L V8 F/I	33-2084 ♦	HP-2004
Ram 2500 Pickup	8.0L V10 F/I	33-2058 ♦	HP-2004
Ram 2500 Van	5.2L V8 F/I	E-1100	HP-2004
Ram 2500 Van	5.9L V8 F/I	E-1100	HP-2004
Ram 3500 Pickup	5.9L L6 DSL	33-2056 ♦	HP-4003
Ram 3500 Pickup	5.9L V8 F/I	33-2084	HP-2004
Ram 3500 Pickup	8.0L V10 F/I	33-2058 ♦	HP-2004
Ram 3500 Van	5.9L V8 F/I	E-1100	HP-2004
Stratus	2.4L L4 F/I - Coupe	33-2072	HP-1010
Stratus	2.4L L4 F/I - Sedan	E-1007	HP-1002
Stratus	2.7L V6 F/I	E-1007	HP-2004
Stratus	3.0L V6 F/I	33-2072	HP-1004
Viper	8.0L V10 F/I	33-2085*	HP-2004
2000 DODGE			
Avenger	2.5L V6 F/I	33-2072 ♦	HP-2004
Caravan	2.4L L4 F/I	33-2087	HP-1002
Caravan	3.0L V6 F/I	33-2087	HP-2004
Caravan	3.3L V6 F/I	33-2087	HP-2004
Dakota	2.5L L4 F/I	33-2175	HP-2004

Vehicle	Engine Type	Air Filter	Oil Filter
2000 DODGE			
Dakota	3.9L V6 F/I	33-2175	HP-2004
Dakota	4.7L V8 F/I	33-2175 ♦	HP-2004
Dakota	5.9L V8 F/I	33-2175 ♦	HP-2004
Durango	4.7L V8 F/I	33-2175 ♦	HP-2004
Durango	5.2L V8 F/I	33-2175 ♦	HP-2004
Durango	5.9L V8 F/I	33-2175 ♦	HP-2004
Grand Caravan	3.0L V6 F/I	33-2087	HP-2004
Grand Caravan	3.3L V6 F/I	33-2087	HP-2004
Grand Caravan	3.8L V6 F/I	33-2087	HP-2004
Intrepid	2.7L V6 F/I	33-2136 ♦	HP-2004
Intrepid	3.2L V6 F/I	33-2136	HP-2004
Intrepid	3.5L V6 F/I	33-2136 ♦	HP-2004
Neon	2.0L L4 F/I	E-1006 ♦	HP-1002
Ram 1500 Pickup	3.9L V6 F/I	33-2084 ♦	HP-2004
Ram 1500 Pickup	5.2L V8 F/I	33-2084 ♦	HP-2004
Ram 1500 Pickup	5.9L V8 F/I	33-2084 ♦	HP-2004
Ram 1500 Van	3.9L V6 F/I	E-1100	HP-2004
Ram 1500 Van	5.2L V8 F/I	E-1100	HP-2004
Ram 1500 Van	5.9L V8 F/I	E-1100	HP-2004
Ram 2500 Pickup	5.9L L6 DSL	33-2056 ♦	HP-4003
Ram 2500 Pickup	5.9L V8 F/I	33-2084 ♦	HP-2004
Ram 2500 Pickup	8.0L V10 F/I	33-2058 ♦	HP-2004
Ram 2500 Van	5.9L V8 F/I	E-1100	HP-2004
Ram 3500 Pickup	5.9L L6 DSL	33-2056 ♦	HP-4003
Ram 3500 Pickup	5.9L V8 F/I	33-2084	HP-2004
Ram 3500 Pickup	8.0L V10 F/I	33-2058 ♦	HP-2004
Ram 3500 Van	5.2L V8 F/I	E-1100	HP-2004
Ram 3500 Van	5.9L V8 F/I	E-1100	HP-2004
Stratus	2.0L L4 F/I	33-2067	HP-1002
Stratus	2.4L L4 F/I	33-2067	HP-1002
Stratus	2.5L V6 F/I	33-2067	HP-2004
Viper	8.0L V10 F/I	33-2085*	HP-2004
1999 DODGE			
Avenger	2.0L L4 F/I	33-2072	HP-2004
Avenger	2.5L V6 F/I	33-2072 ♦	HP-2004
Caravan	3.0L V6 F/I	33-2087	HP-2004
Caravan	3.3L V6 F/I	33-2087	HP-2004
Caravan	3.8L V6 F/I	33-2087	HP-2004
Dakota	2.5L L4 F/I	33-2175	HP-2004
Dakota	3.9L V6 F/I	33-2175	HP-2004
Dakota	5.2L V8 F/I	33-2175 ♦	HP-2004
Dakota	5.9L V8 F/I	33-2175 ♦	HP-2004
Durango	3.9L V6 F/I	33-2175	HP-2004
Durango	5.2L V8 F/I	33-2175 ♦	HP-2004
Durango	5.9L V8 F/I	33-2175 ♦	HP-2004
Grand Caravan	3.3L V6 F/I	33-2087	HP-2004
Grand Caravan	3.8L V6 F/I	33-2087	HP-2004
Intrepid	2.7L V6 F/I	33-2136 ♦	HP-2004
Intrepid	3.2L V6 F/I	33-2136	HP-2004
Neon	2.0L L4 F/I	33-2087	HP-1002
		33-2087 ♦	HP-1002
Ram 1500 Pickup	3.9L V6 F/I	33-2084 ♦	HP-2004
Ram 1500 Pickup	5.2L V8 F/I	33-2084 ♦	HP-2004
Ram 1500 Pickup	5.9L V8 F/I	33-2084 ♦	HP-2004
Ram 1500 Van	3.9L V6 F/I	E-1100	HP-2004
Ram 1500 Van	5.2L V8 F/I	E-1100	HP-2004
Ram 1500 Van	5.9L V8 F/I	E-1100	HP-2004
Ram 2500 Pickup	5.9L L6 DSL	33-2056 ♦	HP-4003
Ram 2500 Pickup	5.9L V8 F/I	33-2084 ♦	HP-2004
Ram 2500 Pickup	8.0L V10 F/I	33-2058 ♦	HP-2004
Ram 2500 Van	5.2L V8 F/I	E-1100	HP-2004
Ram 2500 Van	5.9L V8 F/I	E-1100	HP-2004
Ram 3500 Pickup	5.9L L6 DSL	33-2056 ♦	HP-4003

*Indicates 2 filters required ♦ - Intake kit available - see page 80 Applications updated daily at knfilters.com

Vehicle	Engine Type	Air Filter	Oil Filter
1999 DODGE			
Ram 3500 Pickup	5.9L V8 F/I	33-2084	HP-2004
Ram 3500 Pickup	8.0L V10 F/I	33-2058 ♦	HP-2004
Ram 3500 Van	5.9L V8 F/I	E-1100	HP-2004
Stratus	2.0L L4 F/I	33-2067	HP-1002
Stratus	2.4L L4 F/I	33-2067	HP-1002
Stratus	2.5L V6 F/I	33-2067	HP-2004
Viper	8.0L V10 F/I	33-2085*	HP-2004
1998 DODGE			
Avenger	2.0L L4 F/I	33-2072	HP-2004
Avenger	2.5L V6 F/I	33-2072 ♦	HP-2004
B1500 Van	3.9L V6 F/I	E-1100	HP-2004
B1500 Van	5.2L V8 F/I	E-1100	HP-2004
B3500 Van	5.2L V8 F/I	E-1100	HP-2004
B3500 Van	5.9L V8 F/I	E-1100	HP-2004
Caravan	2.4L L4 F/I	33-2087	HP-1002
Caravan	3.0L V6 F/I	33-2087	HP-2004
Caravan	3.3L V6 F/I	33-2087	HP-2004
Caravan	3.8L V6 F/I	33-2087	HP-2004
Dakota	2.5L L4 F/I	33-2175	HP-2004
Dakota	3.9L V6 F/I	33-2175	HP-2004
Dakota	5.2L V8 F/I	33-2175 ♦	HP-2004
Dakota	5.9L V8 F/I	33-2175 ♦	HP-2004
Durango	3.9L V6 F/I	33-2175	HP-2004
Durango	5.2L V8 F/I	33-2175 ♦	HP-2004
Durango	5.9L V8 F/I	33-2175 ♦	HP-2004
Grand Caravan	3.3L V6 F/I	33-2087	HP-2004
Grand Caravan	3.8L V6 F/I	33-2087	HP-2004
Intrepid	2.7L V6 F/I	33-2136 ♦	HP-2004
Intrepid	3.2L V6 F/I	33-2136	HP-2004
Neon	2.0L L4 F/I	33-2087	HP-1002
		33-2087 ♦	HP-1002
Ram 1500 Pickup	3.9L V6 F/I	33-2084 ♦	HP-2004
Ram 1500 Pickup	5.2L V8 F/I	33-2084 ♦	HP-2004
Ram 1500 Pickup	5.9L V8 F/I	33-2084 ♦	HP-2004
Ram 2500 Pickup	5.2L V8 F/I	33-2084 ♦	HP-2004
Ram 2500 Pickup	5.9L L6 DSL	33-2056 ♦	HP-4003
Ram 2500 Pickup	5.9L V8 F/I	33-2084 ♦	HP-2004
Ram 2500 Pickup	8.0L V10 F/I	33-2058 ♦	HP-2004
Ram 3500 Pickup	5.9L L6 DSL	33-2056 ♦	HP-4003
Ram 3500 Pickup	5.9L V8 F/I	33-2084	HP-2004
Ram 3500 Pickup	8.0L V10 F/I	33-2058 ♦	HP-2004
Stratus	2.0L L4 F/I	33-2067	HP-1002
Stratus	2.4L L4 F/I	33-2067	HP-1002
Stratus	2.5L V6 F/I	33-2067	HP-2004
Viper	8.0L V10 F/I	33-2085* ♦	HP-2004
1997 DODGE			
Avenger	2.0L L4 F/I	33-2072	HP-2004
Avenger	2.5L V6 F/I	33-2072	HP-2004
B2500 Van	3.9L V6 F/I	E-1100	HP-2004
B2500 Van	5.2L V8 F/I	E-1100	HP-2004
B3500 Van	5.9L V8 F/I	E-1100	HP-2004
Caravan	3.3L V6 F/I	33-2087	HP-2004
Caravan	3.8L V6 F/I	33-2087	HP-2004
Dakota	2.5L L4 F/I	33-2175	HP-2004
Dakota	3.9L V6 F/I	33-2175	HP-2004
Dakota	5.2L V8 F/I	33-2175 ♦	HP-2004
Grand Caravan	3.3L V6 F/I	33-2087	HP-2004
Grand Caravan	3.8L V6 F/I	33-2087	HP-2004
Intrepid	3.3L V6 F/I	33-2066-1	HP-2004
Intrepid	3.5L V6 F/I	33-2066-1	HP-2004
Neon	2.0L L4 F/I	33-2087	HP-1002
		33-2087 ♦	HP-1002
Ram 1500 Pickup	3.9L V6 F/I	33-2084 ♦	HP-2004
Ram 1500 Pickup	5.2L V8 F/I	33-2084 ♦	HP-2004
Ram 1500 Pickup	5.9L V8 F/I	33-2084 ♦	HP-2004
Ram 2500 Pickup	5.2L V8 F/I	33-2084 ♦	HP-2004
Ram 2500 Pickup	5.9L L6 DSL	33-2056 ♦	HP-4003
Ram 2500 Pickup	5.9L V8 F/I	33-2084 ♦	HP-2004
Ram 2500 Pickup	8.0L V10 F/I	33-2058 ♦	HP-2004
Ram 3500 Pickup	5.9L L6 DSL	33-2056 ♦	HP-4003
Ram 3500 Pickup	5.9L V8 F/I	33-2084	HP-2004
Ram 3500 Pickup	8.0L V10 F/I	33-2058 ♦	HP-2004
Stratus	2.0L L4 F/I	33-2067	HP-1002
Stratus	2.4L L4 F/I	33-2067	HP-1002
Stratus	2.5L V6 F/I	33-2067	HP-2004
Viper	8.0L V10 F/I	33-2085* ♦	HP-2004
1996 DODGE			
Avenger	2.0L L4 F/I	33-2072	HP-2004
Avenger	2.5L V6 F/I	33-2072	HP-2004
B1500 Van	5.2L V8 F/I	E-1100	HP-2004
B2500 Van	5.2L V8 F/I	E-1100	HP-2004
B2500 Van	5.9L V8 F/I	E-1100	HP-2004
B3500 Van	5.9L V8 F/I	E-1100	HP-2004
Caravan	3.0L V6 F/I	33-2087	HP-2004
Caravan	3.3L V6 F/I	33-2087	HP-2004
Dakota	2.5L L4 F/I	33-2006	HP-2004
Dakota	3.9L V6 F/I	E-1100 ♦	HP-2004
Dakota	5.2L V8 F/I	E-1100 ♦	HP-2004
Grand Caravan	3.3L V6 F/I	33-2087	HP-2004
Grand Caravan	3.8L V6 F/I	33-2087	HP-2004
Intrepid	3.3L V6 F/I	33-2066-1	HP-2004
Intrepid	3.5L V6 F/I	33-2066-1	HP-2004
Neon	2.0L L4 F/I	33-2087	HP-1002
		33-2087 ♦	HP-1002
Ram 1500 Pickup	3.9L V6 F/I	33-2084 ♦	HP-2004
Ram 1500 Pickup	5.2L V8 F/I	33-2084 ♦	HP-2004
Ram 1500 Pickup	5.9L V8 F/I	33-2084 ♦	HP-2004
Ram 2500 Pickup	5.2L V8 F/I	33-2084 ♦	HP-2004
Ram 2500 Pickup	5.9L L6 DSL	33-2056 ♦	HP-4003
Ram 2500 Pickup	5.9L V8 F/I	33-2084 ♦	HP-2004
Ram 2500 Pickup	8.0L V10 F/I	33-2058 ♦	HP-2004
Ram 3500 Pickup	5.9L L6 DSL	33-2056 ♦	HP-4003
Ram 3500 Pickup	5.9L V8 F/I	33-2084	HP-2004
Ram 3500 Pickup	8.0L V10 F/I	33-2058 ♦	HP-2004
Stealth	3.0L V6 F/I	33-2045 ♦	HP-1004
Stratus	2.0L L4 F/I	33-2067	HP-1002
Stratus	2.4L L4 F/I	33-2067	HP-1002
Viper	8.0L V10 F/I	33-2085* ♦	HP-2004
1995 DODGE			
Avenger	2.0L L4 F/I	33-2072	HP-2004
Avenger	2.5L V6 F/I	33-2072	HP-2004
B2500 Van	5.2L V8 F/I	E-1100	HP-2004
Caravan	3.0L V6 F/I	33-2002	HP-2004
Caravan	3.3L V6 F/I		HP-2004
Dakota	2.5L L4 F/I	33-2006	HP-2004
Dakota	3.9L V6 F/I	E-1100 ♦	HP-2004
Dakota	5.2L V8 F/I	E-1100 ♦	HP-2004
Grand Caravan	3.3L V6 F/I		HP-2004
Intrepid	3.3L V6 F/I	33-2066-1	HP-2004
Intrepid	3.5L V6 F/I	33-2066-1	HP-2004
Neon	2.0L L4 F/I	33-2087	HP-1002
		33-2087 ♦	HP-1002
Ram 1500 Pickup	3.9L V6 F/I	33-2084 ♦	HP-2004
Ram 1500 Pickup	5.2L V8 F/I	33-2084 ♦	HP-2004
Ram 1500 Pickup	5.9L V8 F/I	33-2084 ♦	HP-2004
Ram 2500 Pickup	5.2L V8 F/I	33-2084 ♦	HP-2004
Ram 2500 Pickup	5.9L L6 DSL	33-2056 ♦	HP-4003

*Indicates 2 filters required ♦ - Intake kit available - see page 80 Applications updated daily at knfilters.com

Vehicle	Engine Type	Air Filter	Oil Filter
1995 DODGE			
Ram 2500 Pickup	5.9L V8 F/I	33-2084 ♦	HP-2004
Ram 2500 Pickup	8.0L V10 F/I	33-2058 ♦	HP-2004
Ram 3500 Pickup	5.9L L6 DSL	33-2056 ♦	HP-4003
Ram 3500 Pickup	5.9L V8 F/I	33-2084	HP-2004
Ram 3500 Pickup	8.0L V10 F/I	33-2058 ♦	HP-2004
Stealth	3.0L V6 F/I	33-2045 ♦	HP-1004
Viper	8.0L V10 F/I	33-2085* ♦	HP-2004
1994 DODGE			
B250 Van	3.9L V6 F/I	E-1100	HP-2004
B250 Van	5.2L V8 F/I	E-1100	HP-2004
B350 Van	5.2L V8 F/I	E-1100	HP-2004
B350 Van	5.9L V8 F/I	E-1100	HP-2004
Caravan	2.5L L4 F/I	33-2006	HP-2004
Caravan	3.0L V6 F/I	33-2002	HP-2004
Caravan	3.3L V6 F/I - VIN R		HP-2004
Colt	1.5L L4 F/I	33-2074	HP-1010
Colt	1.8L L4 F/I - w/Panel Filter	33-2074	
Colt	1.8L L4 F/I - w/Round Filter	E-2875	
Dakota	2.5L L4 F/I	33-2006	HP-2004
Dakota	3.9L V6 F/I	E-1100 ♦	HP-2004
Dakota	5.2L V8 F/I	E-1100 ♦	HP-2004
Grand Caravan	3.3L V6 F/I		HP-2004
Intrepid	3.3L V6 F/I	33-2066-1	HP-2004
Intrepid	3.5L V6 F/I	33-2066-1	HP-2004
Ram 1500 Pickup	3.9L V6 F/I	33-2084 ♦	HP-2004
Ram 1500 Pickup	5.2L V8 F/I	33-2084 ♦	HP-2004
Ram 1500 Pickup	5.9L V8 F/I	33-2084 ♦	HP-2004
Ram 2500 Pickup	5.2L V8 F/I	33-2084 ♦	HP-2004
Ram 2500 Pickup	5.9L L6 DSL	33-2056 ♦	HP-4003
Ram 2500 Pickup	5.9L V8 F/I	33-2084 ♦	HP-2004
Ram 2500 Pickup	8.0L V10 F/I	33-2058 ♦	HP-2004
Ram 3500 Pickup	5.9L L6 DSL	33-2056 ♦	HP-4003
Ram 3500 Pickup	5.9L V8 F/I	33-2084	HP-2004
Ram 3500 Pickup	8.0L V10 F/I	33-2058 ♦	HP-2004
Shadow	2.5L L4 F/I	E-1923	HP-2004
Shadow	3.0L V6 F/I	33-2002	HP-2004
Spirit	2.5L L4 F/I - VIN K	E-1923	HP-2004
Spirit	2.5L L4 F/I - VIN V	33-2002	HP-2004
Spirit	3.0L V6 F/I	33-2002	HP-2004
Stealth	3.0L V6 F/I	33-2045 ♦	HP-1004
Viper	8.0L V10 F/I	33-2085*	HP-2004
1993 DODGE			
B250 Van	5.2L V8 F/I	E-1100	HP-2004
Caravan	3.3L V6 F/I		HP-2004
D150	5.2L V8 F/I	E-1100 ♦	HP-2004
D150	5.9L V8 F/I	E-1100 ♦	HP-2004
D250	5.2L V8 F/I	E-1100 ♦	HP-2004
D250	5.9L L6 DSL	E-1023	HP-4003
D250	5.9L V8 F/I	E-1100 ♦	HP-2004
D350	5.9L L6 DSL	E-1023	HP-4003
D350	5.9L V8 F/I	E-1100 ♦	HP-2004
Dakota	2.5L L4 F/I	33-2006	HP-2004
Dakota	3.9L V6 F/I	E-1100 ♦	HP-2004
Dakota	5.2L V8 F/I	E-1100 ♦	HP-2004
Grand Caravan	3.0L V6 F/I	33-2002	HP-2004
Grand Caravan	3.3L V6 F/I		HP-2004
Ram 50	2.4L L4 F/I		HP-1010
Ramcharger	5.2L V8 F/I	E-1100	HP-2004
Ramcharger	5.9L V8 F/I	E-1100	HP-2004
Shadow	2.2L L4 F/I	E-1923	HP-2004
Shadow	2.5L L4 F/I	E-1923	HP-2004
Shadow	3.0L V6 F/I	33-2002	HP-2004
1993 DODGE			
Spirit	2.5L L4 F/I	E-1923	HP-2004
Spirit	3.0L V6 F/I	33-2002	HP-2004
Stealth	3.0L V6 F/I	33-2045 ♦	HP-1004
Viper	8.0L V10 F/I	33-2085*	HP-2004
W150 Pickup	5.2L V8 F/I	E-1100 ♦	HP-2004
W150 Pickup	5.9L V8 F/I	E-1100 ♦	HP-2004
W250 Pickup	5.2L V8 F/I	E-1100 ♦	HP-2004
W250 Pickup	5.9L L6 DSL	E-1023	HP-4003
W250 Pickup	5.9L V8 F/I	E-1100 ♦	HP-2004
W350 Pickup	5.9L L6 DSL	E-1023	HP-4003
W350 Pickup	5.9L V8 F/I	E-1100 ♦	HP-2004
1992 DODGE			
B350 Van	5.9L V8 F/I	E-1100	HP-2004
D150	3.9L V6 F/I		HP-2004
D150	5.2L V8 F/I	E-1100 ♦	HP-2004
D250	5.2L V8 F/I	E-1100 ♦	HP-2004
D250	5.9L L6 DSL	E-1023	HP-4003
D250	5.9L V8 F/I	E-1100 ♦	HP-2004
D350	5.9L L6 DSL	E-1023	HP-4003
D350	5.9L V8 F/I	E-1100 ♦	HP-2004
Dakota	2.5L L4 F/I	33-2006	HP-2004
Dakota	3.9L V6 F/I	E-1100 ♦	HP-2004
Dakota	5.2L V8 F/I	E-1100 ♦	HP-2004
Daytona	3.0L V6 F/I	33-2002	HP-2004
Grand Caravan	3.0L V6 F/I	33-2002	HP-2004
Grand Caravan	3.3L V6 F/I		HP-2004
Ram 50	2.4L L4 F/I	33-2045	HP-1005
Ramcharger	5.2L V8 F/I	E-1100	HP-2004
Ramcharger	5.9L V8 F/I	E-1100 ♦	HP-2004
Shadow	2.5L L4 F/I - exc. Turbo	E-1923	
Shadow	2.5L L4 F/I - Turbo	33-2039	HP-2004
Stealth	3.0L V6 F/I	33-2045 ♦	HP-1004
Viper	8.0L V10 F/I	33-2085*	HP-2004
W150 Pickup	5.2L V8 F/I	E-1100 ♦	HP-2004
W250 Pickup	5.2L V8 F/I	E-1100 ♦	HP-2004
W250 Pickup	5.9L L6 DSL	E-1023	HP-4003
W250 Pickup	5.9L V8 F/I	E-1100 ♦	HP-2004
W350 Pickup	5.9L L6 DSL	E-1023	HP-4003
W350 Pickup	5.9L V8 F/I	E-1100 ♦	HP-2004
1991 DODGE			
D150	3.9L V6 F/I		HP-2004
D150	5.2L V8 F/I	E-1100	HP-2004
D250	5.9L L6 DSL	E-1023	HP-4003
D250	5.9L V8 F/I	E-1100	HP-2004
D350	5.9L L6 DSL	E-1023	HP-4003
D350	5.9L V8 F/I	E-1100	HP-2004
Dakota	2.5L L4 F/I	33-2006	HP-2004
Dakota	3.9L V6 F/I	E-1100	HP-2004
Dakota	5.2L V8 F/I	E-1100	HP-2004
Daytona	2.5L L4 F/I		HP-2004
Daytona	2.5L L4 F/I - exc. Turbo	E-1923	HP-2004
Daytona	2.5L L4 F/I - Turbo	33-2039	HP-2004
Dynasty	3.0L V6 F/I	33-2002	HP-2004
Dynasty	3.3L V6 F/I		HP-2004
Grand Caravan	3.3L V6 F/I		HP-2004
Ram 50	2.4L L4 F/I	33-2045	HP-1005
Ramcharger	5.2L V8 F/I	E-1100	HP-2004
Ramcharger	5.9L V8 F/I	E-1100	HP-2004
Shadow	2.5L L4 F/I - exc. Turbo	E-1923	
Shadow	2.5L L4 F/I - Turbo	33-2039	
Spirit	2.2L L4 F/I	33-2002	HP-2004
Spirit	2.5L L4 F/I		HP-2004
Spirit	2.5L L4 F/I - exc. Turbo	E-1923	HP-2004

*Indicates 2 filters required ♦ - Intake kit available - see page 80 Applications updated daily at knfilters.com

Vehicle	Engine Type	Air Filter	Oil Filter
1991 DODGE			
Spirit	2.5L L4 F/I - Turbo	33-2039	HP-2004
Stealth	3.0L V6 F/I	33-2045♦	HP-1004
W150 Pickup	5.2L V8 F/I	E-1100	HP-2004
W250 Pickup	5.9L L6 DSL	E-1023	HP-4003
W250 Pickup	5.9L V8 F/I	E-1100	HP-2004
W350 Pickup	5.9L L6 DSL	E-1023	HP-4003
W350 Pickup	5.9L V8 F/I	E-1100	HP-2004
1990 DODGE			
Caravan	3.0L V6 F/I	33-2002	HP-1002
D150	3.9L V6 F/I		HP-1002
D150	5.2L V8 F/I	E-1100	HP-2004
D150	5.9L V8 F/I	E-1100	HP-2004
D250	5.9L L6 DSL	E-1023	HP-4003
D250	5.9L V8 F/I	E-1100	HP-2004
D350	5.9L L6 DSL	E-1023	HP-4003
D350	5.9L V8 F/I	E-1100	HP-2004
Dakota	3.9L V6 F/I	E-1100	HP-1002
Dakota	5.2L V8 F/I		HP-2004
Daytona	2.2L L4 F/I		HP-1002
Daytona	2.5L L4 F/I		HP-1002
Daytona	2.5L L4 F/I - exc. Turbo	E-1923	HP-1002
Daytona	2.5L L4 F/I - Turbo	33-2039	HP-1002
Daytona	3.0L V6 F/I	33-2002	HP-1002
Dynasty	3.3L V6 F/I	33-2006	HP-1002
Ram 50	2.4L L4 F/I	E-2810	HP-1005
Ramcharger	5.2L V8 F/I	E-1100	HP-2004
Ramcharger	5.9L V8 F/I	E-1100	HP-2004
Shadow	2.5L L4 F/I - Turbo	33-2039	
W150 Pickup	5.2L V8 F/I	E-1100	HP-2004
W150 Pickup	5.9L V8 F/I	E-1100	HP-2004
W250 Pickup	5.9L L6 DSL	E-1023	HP-4003
W250 Pickup	5.9L V8 F/I	E-1100	HP-2004
W350 Pickup	5.9L L6 DSL	E-1023	HP-4003
W350 Pickup	5.9L V8 F/I	E-1100	HP-2004
1989 DODGE			
B350 Van	5.9L V8 F/I	E-1100	HP-2004
Caravan	3.0L V6 F/I	33-2002	HP-1002
Colt	1.5L L4 CARB	E-1090	HP-1005
Colt	1.5L L4 F/I	E-2875	HP-1005
D100	3.9L V6 F/I		HP-1002
D100	5.2L V8 F/I	E-1100	HP-2004
D150	3.9L V6 F/I		HP-1002
D150	5.2L V8 F/I	E-1100	HP-2004
D250	5.9L L6 DSL	E-1023	HP-4003
D250	5.9L V8 F/I	E-1100	HP-2004
D350	5.9L L6 DSL	E-1023	HP-4003
D350	5.9L V8 F/I	E-1100	HP-2004
Dakota	3.9L V6 F/I	E-1290	HP-1002
Dakota	5.2L V8 F/I	E-1290	HP-2004
Daytona	2.2L L4 F/I	33-2006	HP-1002
Daytona	2.5L L4 F/I		HP-1002
Daytona	2.5L L4 F/I - exc. Turbo	E-1923	HP-1002
Daytona	2.5L L4 F/I - Turbo	33-2006	HP-1002
Raider	2.6L L4 CARB	E-2723	HP-1005
Ram 50	2.6L L4 CARB	E-2810	HP-1005
Ramcharger	5.2L V8 F/I	E-1100	HP-2004
Ramcharger	5.9L V8 F/I	E-1100	HP-2004
Shadow	2.5L L4 F/I		HP-1002
Shadow	2.5L L4 F/I - exc. Turbo	E-1923	HP-1002
Shadow	2.5L L4 F/I - Turbo	33-2006	HP-1002
Spirit	2.5L L4 F/I		HP-1002
Spirit	2.5L L4 F/I - exc. Turbo	E-1923	HP-1002
Spirit	2.5L L4 F/I - Turbo	33-2006	HP-1002
1989 DODGE			
W100	5.2L V8 F/I	E-1100	HP-2004
W150 Pickup	5.2L V8 F/I	E-1100	HP-2004
W150 Pickup	5.9L V8 F/I	E-1100	HP-2004
W250 Pickup	5.9L L6 DSL	E-1023	HP-4003
W250 Pickup	5.9L V8 F/I	E-1100	HP-2004
W350 Pickup	5.9L L6 DSL	E-1023	HP-4003
W350 Pickup	5.9L V8 F/I	E-1100	HP-2004
1988 DODGE			
D100	3.9L V6 F/I		HP-1002
D100	5.2L V8 F/I	E-1290	HP-2004
D150	5.2L V8 F/I	E-1290	HP-2004
D150	5.9L V8 CARB	E-1100	HP-2004
Dakota	3.9L V6 F/I	E-1290	HP-1002
Daytona	2.2L L4 F/I	33-2006	HP-1002
Mini Ram	3.0L V6 F/I		HP-1002
Raider	2.6L L4 CARB	E-2723	HP-1005
Ram 50	2.0L L4 CARB	E-2810	HP-1005
Ram 50	2.6L L4 CARB	E-2810	HP-1005
Ramcharger	5.2L V8 F/I	E-1290	HP-2004
Ramcharger	5.9L V8 CARB	E-1100	HP-2004
Shadow	2.2L L4 F/I - Turbo	33-2006	
W100	5.2L V8 F/I	E-1290	HP-2004
W150 Pickup	5.2L V8 F/I	E-1290	HP-2004
1987 DODGE			
Charger	2.2L L4 F/I	33-2006	HP-1002
D100	5.2L V8 CARB	E-1100	HP-2004
D150	5.2L V8 CARB	E-1100	HP-2004
Dakota	2.2L L4 CARB	E-1080	HP-1002
Dakota	3.9L V6 CARB	E-1100	HP-1002
Daytona	2.2L L4 F/I	33-2006	HP-1002
Lancer	2.2L L4 F/I - exc. Turbo	E-1923	HP-1002
Lancer	2.2L L4 F/I - Turbo	33-2006	HP-1002
Omni	2.2L L4 CARB	33-2006	HP-1002
Omni	2.2L L4 F/I	33-2006	HP-1002
Raider	2.6L L4 CARB	E-2723	HP-1005
Ram 50	2.0L L4 CARB	E-2810	HP-1005
Ram 50	2.6L L4 CARB	E-2810	HP-1005
Ramcharger	5.2L V8 CARB	E-1100	HP-2004
Ramcharger	5.9L V8 CARB	E-1100	HP-2004
W150 Pickup	5.2L V8 CARB	E-1100	HP-2004
W150 Pickup	5.9L V8 CARB	E-1100	HP-2004
W250 Pickup	5.2L V8 CARB	E-1100	HP-2004
1986 DODGE			
600	2.2L L4 F/I - Turbo	33-2006	HP-1002
Charger	2.2L L4 CARB	33-2006	HP-1002
Charger	2.2L L4 F/I	33-2006	HP-1002
D100	3.7L L6 CARB	E-1100	HP-2004
D150	5.2L V8 CARB	E-1100	HP-2004
D150	5.9L V8 CARB	E-1100	HP-2004
Daytona	2.2L L4 F/I - exc. Turbo	E-1923	HP-1002
Daytona	2.2L L4 F/I - Turbo	33-2006	HP-1002
Omni	2.2L L4 CARB	33-2006	HP-1002
Omni	2.2L L4 F/I	33-2006	HP-1002
Power Ram 50	2.6L L4 CARB	E-2810	HP-1005
Ram 50	2.0L L4 CARB	E-2810	HP-1005
Ramcharger	5.9L V8 CARB	E-1100	HP-2004
W150 Pickup	5.2L V8 CARB	E-1100	HP-2004
W250 Pickup	5.2L V8 CARB	E-1100	HP-2004
1985 DODGE			
Charger	2.2L L4 CARB	33-2006	HP-1002
Charger	2.2L L4 F/I	33-2006	HP-1002
D150	5.2L V8 CARB	E-1100	HP-2004

*Indicates 2 filters required ♦ - Intake kit available - see page 80 Applications updated daily at knfilters.com

Vehicle	Engine Type	Air Filter	Oil Filter
1985 DODGE			
D150	5.9L V8 CARB	E-1100	HP-2004
D350	5.9L V8 CARB	E-1100	HP-2004
Daytona	2.2L L4 F/I		HP-1002
Daytona	2.2L L4 F/I - exc. Turbo	33-2002	HP-1002
Daytona	2.2L L4 F/I - Turbo	33-2006	HP-1002
Omni	2.2L L4 CARB	33-2006	HP-1002
Omni	2.2L L4 F/I	33-2006	HP-1002
Power Ram 50	2.3L L4 DSL	E-2871	
Ramcharger	5.2L V8 CARB	E-1100	HP-2004
Ramcharger	5.9L V8 CARB	E-1100	HP-2004
W150 Pickup	5.2L V8 CARB	E-1100	HP-2004
W150 Pickup	5.9L V8 CARB	E-1100	HP-2004
1984 DODGE			
Charger	2.2L L4 CARB	33-2006	HP-1002
D150	3.7L L6 CARB	E-1100	HP-2004
D150	5.2L V8 CARB	E-1100	HP-2004
D150	5.9L V8 CARB	E-1100	HP-2004
D350	5.9L V8 CARB	E-1100	HP-2004
Power Ram 50	2.3L L4 DSL	E-2871	
Ram 50	2.3L L4 DSL	E-2871	
Ramcharger	5.2L V8 CARB	E-1100	HP-2004
Ramcharger	5.9L V8 CARB	E-1100	HP-2004
W150 Pickup	5.2L V8 CARB	E-1100	HP-2004
W150 Pickup	5.9L V8 CARB	E-1100	HP-2004
1983 DODGE			
D150	3.7L L6 CARB	E-1100	HP-2004
D150	5.2L V8 CARB	E-1100	HP-2004
Ramcharger	5.2L V8 CARB	E-1100	HP-2004
Rampage	2.2L L4 CARB		HP-1002
W150 Pickup	5.2L V8 CARB	E-1100	HP-2004
1982 DODGE			
D150	5.2L V8 CARB	E-1100	HP-2004
Ramcharger	5.2L V8 CARB	E-1100	HP-2004
1981 DODGE			
D150	5.2L V8 CARB	E-1100	HP-2004
1980 DODGE			
B200 Van	360 V8 CARB	E-1530	HP-2004
D150	318 V8 CARB	E-1100	HP-2004
1979 DODGE			
D50 Pickup	122 L4 CARB	E-2810	HP-1005
D100	318 V8 4 BBL.	E-1250	HP-2004
D150	318 V8 4 BBL.	E-1250	HP-2004
D150	360 V8 2 BBL.	E-1100	HP-2004
D150	360 V8 4 BBL.	E-1530	HP-2004
Diplomat	318 V8 2 BBL.	E-1100	HP-2004
Diplomat	318 V8 4 BBL.	E-1530	HP-2004
Ramcharger	360 V8 2 BBL.	E-1100	HP-2004
Ramcharger	360 V8 4 BBL.	E-1530	HP-2004
W150 Pickup	318 V8 2 BBL.	E-1100	HP-2004
W150 Pickup	318 V8 4 BBL.	E-1250	HP-2004
1978 DODGE			
B200 Van	360 V8 CARB	E-1250	HP-2004
B300	360 V8 CARB	E-1250	HP-2004
B300	440 V8 CARB	E-1250	HP-2004
Challenger	98 L4 CARB	E-2610	HP-1005
D150	360 V8 CARB	E-1250	HP-2004
D150	440 V8 CARB	E-1250	HP-2004
W150 Pickup	360 V8 CARB	E-1250	HP-2004
W150 Pickup	400 V8 CARB	E-1250	
W150 Pickup	440 V8 CARB	E-1250	HP-2004

Vehicle	Engine Type	Air Filter	Oil Filter
1977 DODGE			
Aspen	225 L6 2 BBL.	E-1100	HP-2004
B200 Van	360 V8 CARB	E-1250	HP-2004
B200 Van	440 V8 CARB	E-1250	HP-2004
B300	360 V8 CARB	E-1250	HP-2004
D100	440 V8 CARB		HP-2004
D100	440 V8 CARB - 3-1/2 in tall filter	E-1250	HP-2004
Motorhome	440 V8 4 BBL. - Class A	E-1530	
Motorhome	440 V8 4 BBL. - Class C	E-1250	
Ramcharger	440 V8 CARB - 3-1/2 in tall filter	E-1250	
W150 Pickup	360 V8 CARB	E-1250	HP-2004
W200	400 V8 CARB	E-1250	HP-2004
1976 DODGE			
D100	318 V8 CARB	E-1100	HP-2004
D100	360 V8 CARB	E-1250	HP-2004
D200	360 V8 CARB	E-1250	HP-2004
Ramcharger	360 V8 CARB	E-1250	HP-2004
1975 DODGE			
Dart	225 L6 CARB	E-1000	HP-2004
Dart	318 V8 CARB	E-1100	HP-2004
1974 DODGE			
Challenger	318 V8 CARB	E-1100	HP-2004
Challenger	360 V8 CARB	E-1530	HP-2004
D100 Pickup	360 V8 CARB	E-1250	HP-2004
Dart	225 L6 CARB	E-1000	HP-2004
Dart	318 V8 CARB	E-1100	HP-2004
Dart	360 V8 CARB	E-1530	HP-2004
1973 DODGE			
B300 Van	360 V8 CARB - 3-1/2 in tall filter	E-1250	
Challenger	318 V8 CARB	E-1100	HP-2004
Challenger	340 V8 CARB	E-1530	HP-2004
Charger	318 V8 CARB	E-1100	HP-2004
Charger	400 V8 CARB	E-1530	HP-2004
Charger	440 V8 CARB	E-1530	HP-2004
D100 Pickup	318 V8 CARB	E-1100	
D100 Pickup	318 V8 CARB - exc. 1qt. cart. type	E-1100	HP-3001
D100 Pickup	360 V8 CARB	E-1250	HP-3001
D200 Pickup	360 V8 CARB	E-1250	HP-3001
Dart	318 V8 CARB	E-1100	HP-2004
Dart	340 V8 CARB	E-1530	HP-2004
W100 Pickup	360 V8 CARB	E-1250	HP-3001
1972 DODGE			
Challenger	340 V8 CARB	E-1530	HP-3001
Charger	318 V8 CARB	E-1100	HP-3001
Charger	340 V8 CARB	E-1530	HP-3001
Charger	400 V8 CARB	E-1530	HP-3001
Charger	440 V8 3x2BBL.	E-1980	HP-3001
Charger	440 V8 4 BBL.	E-1530	HP-3001
Coronet	318 V8 CARB	E-1100	HP-3001
D100 Pickup	360 V8 CARB	E-1250	
D100 Pickup	400 V8 CARB - 3-1/2 in tall filter	E-1250	
Dart	318 V8 CARB	E-1100	HP-3001
Dart	340 V8 CARB	E-1530	HP-3001
1971 DODGE			
Challenger	318 V8 CARB	E-1100	HP-3001
Challenger	340 V8 3x2BBL.	E-1980	HP-3001
Challenger	340 V8 4 BBL.	E-1530	HP-3001
Challenger	383 V8 CARB	E-1530	HP-3001

*Indicates 2 filters required ♦ - Intake kit available - see page 80 Applications updated daily at knfilters.com

Vehicle	Engine Type	Air Filter	Oil Filter
1971 DODGE			
Challenger	426 V8 CARB	E-1980	HP-3001
Challenger	440 V8 CARB	E-1980	HP-3001
Charger	383 V8 CARB	E-1530	HP-3001
Charger	426 V8 CARB	E-1980	HP-3001
Charger	440 V8 3x2BBL.	E-1980	HP-3001
Charger	440 V8 4 BBL.	E-1530	HP-3001
D100 Pickup	318 V8 CARB	E-1100	
D100 Pickup	318 V8 CARB - exc. 1qt. cart. type	E-1100	HP-3001
Dart	318 V8 CARB	E-1100	HP-3001
Dart	340 V8 CARB	E-1530	HP-3001
1970 DODGE			
Challenger	318 V8 CARB	E-1100	HP-3001
Challenger	340 V8 3x2BBL.	E-1980	HP-3001
Challenger	340 V8 4 BBL.	E-1530	HP-3001
Challenger	383 V8 CARB	E-1530	HP-3001
Challenger	426 V8 CARB	E-1980	HP-3001
Challenger	440 V8 3x2BBL.	E-1980	HP-3001
Challenger	440 V8 4 BBL.		HP-3001
Challenger	440 V8 4 BBL. - Dual Snorkel	E-1530	HP-3001
Challenger	440 V8 4 BBL. - single snorkel	E-1540	HP-3001
Charger	383 V8 CARB	E-1530	HP-3001
Charger	426 V8 CARB	E-1980	HP-3001
Charger	440 V8 3x2BBL.	E-1980	HP-3001
Charger	440 V8 4 BBL.		HP-3001
Charger	440 V8 4 BBL. - Dual Snorkel	E-1530	HP-3001
Charger	440 V8 4 BBL. - single snorkel	E-1540	HP-3001
Coronet	318 V8 CARB	E-1100	HP-3001
Coronet	383 V8 CARB	E-1530	HP-3001
Coronet	426 V8 CARB	E-1980	HP-3001
Coronet	440 V8 3x2BBL.	E-1980	HP-3001
Coronet	440 V8 4 BBL.		HP-3001
Coronet	440 V8 4 BBL. - Dual Snorkel	E-1530	HP-3001
Coronet	440 V8 4 BBL. - single snorkel	E-1540	HP-3001
Dart	318 V8 CARB	E-1100	HP-3001
Dart	340 V8 CARB	E-1530	HP-3001
1969 DODGE			
Charger	318 V8 CARB	E-1100	HP-3001
Charger	383 V8 CARB		HP-3001
Charger	383 V8 CARB - w/air control	E-1450	HP-3001
Charger	383 V8 CARB - w/o air control	E-1540	HP-3001
Charger	426 V8 CARB	E-1980	HP-3001
Charger	440 V8 CARB		HP-3001
Charger	440 V8 CARB - w/o snorkel	E-1530	HP-3001
Charger	440 V8 CARB - w/snorkel	E-1540	HP-3001
Coronet	383 V8 CARB	E-1530	HP-3001
Coronet	426 V8 CARB	E-1980	HP-3001
Coronet	440 V8 CARB		HP-3001
Coronet	440 V8 CARB - w/ram air	E-1980	HP-3001
Dart	318 V8 CARB	E-1100	HP-3001
Dart	340 V8 CARB	E-1530	HP-3001
Dart	383 V8 CARB	E-1540	HP-3001
1968 DODGE			
Charger	318 V8 CARB	E-1100	HP-3001
Charger	383 V8 CARB	E-1540	HP-3001
Charger	426 V8 CARB	E-1980	HP-3001

Vehicle	Engine Type	Air Filter	Oil Filter
1968 DODGE			
Charger	440 V8 CARB		HP-3001
Charger	440 V8 CARB - w/o snorkel	E-1530	HP-3001
Charger	440 V8 CARB - w/snorkel	E-1540	HP-3001
Coronet	426 V8 CARB	E-1980	HP-3001
Coronet	440 V8 CARB - w/o snorkel	E-1530	
Dart	318 V8 CARB	E-1100	HP-3001
Dart	340 V8 CARB	E-1530	HP-3001
Dart	383 V8 CARB	E-1530	HP-3001
1967 DODGE			
Charger	318 V8 CARB	E-1100	HP-3001
Charger	383 V8 CARB	E-1540	HP-3001
Charger	426 V8 CARB	E-1980	HP-3001
Charger	440 V8 CARB		HP-3001
Coronet	318 V8 CARB	E-1100	HP-3001
Coronet	426 V8 CARB	E-1980	HP-3001
Coronet	440 V8 CARB		HP-3001
Polara	426 V8 CARB	E-1980	HP-3001
1966 DODGE			
Charger	383 V8 CARB	E-1540	HP-3001
Charger	426 V8 CARB	E-1980	HP-3001
Charger	440 V8 CARB	E-1957	HP-3001
Coronet	426 V8 CARB	E-1980	HP-3001
Coronet	440 V8 CARB	E-1957	HP-3001
Dart	225 L6 CARB	E-1000	HP-3001
1965 DODGE			
Coronet	426 V8 CARB	E-1540	HP-3001
1964 DODGE			
Dart	225 L6 CARB	E-1000	HP-3001
1963 DODGE			
440	426 V8 CARB	E-1540	HP-3001
Polara	318 V8 CARB	E-1100	HP-3001
1962 DODGE			
Dart	318 V8 CARB	E-1957	
Polara	318 V8 CARB	E-1957	
2012 DUCATI			
848 EVO	848	DU-1007	KN-153
Diavel	1198	DU-1007	
Diavel Carbon	1198	DU-1007	
Hypermotard 796	796	DU-1006	KN-153
Hypermotard 1100 EVO	1100	DU-1006	KN-153
Hypermotard 1100 EVO SP	1100	DU-1006	KN-153
Monster 696	696	DU-6908	KN-153
Monster 796	796	DU-6908	KN-153
Monster 1100 EVO	1100	DU-6908	KN-153
Multistrada 1200	1198	DU-1210	KN-153
Multistrada 1200s Pikes Peak	1198	DU-1210	KN-153
Multistrada 1200s Sport	1198	DU-1210	KN-153
Multistrada 1200s Touring	1198	DU-1210	KN-153
Streetfighter	848	DU-1007	KN-153
Streetfighter S	1099	DU-1007	KN-153
2011 DUCATI			
848 EVO	848	DU-1007	KN-153
1198	1198	DU-1007	
1198R Corse	1198	DU-1007	KN-153

Vehicle	Engine Type	Air Filter	Oil Filter
2011 DUCATI			
1198S	1198	DU-1007	KN-153
1198S Corse	1198		KN-153
1198SP	1198	DU-1007	KN-153
Diavel	1198	DU-1007	
Diavel Carbon	1198	DU-1007	
Hypermotard 796	796	DU-1006	KN-153
Hypermotard 1100 EVO	1100	DU-1006	KN-153
Hypermotard 1100 EVO SP	1100	DU-1006	KN-153
Monster 696	696	DU-6908	KN-153
Monster 796	796	DU-6908	KN-153
Monster 1100 EVO	1100	DU-6908	KN-153
Multistrada 1200	1198		KN-153
Multistrada 1200	1198 - Non-US, exc. ABS	DU-1007	KN-153
Multistrada 1200	1198 - US	DU-1210	KN-153
Multistrada 1200s	1200		KN-153
Multistrada 1200s Sport	1198	DU-1210	KN-153
Multistrada 1200s Touring	1198	DU-1210	KN-153
Streetfighter	1099	DU-1007	KN-153
Streetfighter S	1099	DU-1007	KN-153
2010 DUCATI			
848 EVO	848	DU-1007	KN-153
1198	1198	DU-1007	
1198R Corse	1198	DU-1007	KN-153
1198S	1198	DU-1007	KN-153
1198S Corse	1198	DU-1007	KN-153
GT1000	992	DU-1006	KN-153
GT1000 Touring	992	DU-1006	KN-153
Hypermotard 796	796	DU-1006	KN-153
Hypermotard 1100 EVO	1100	DU-1006	KN-153
Hypermotard 1100 EVO SP	1100	DU-1006	KN-153
Monster 696	696	DU-6908	KN-153
Monster 796	796	DU-6908	
Monster 1100	1100	DU-6908	KN-153
Monster 1100s	1100	DU-6908	KN-153
Multistrada 1200	1198	DU-1210	KN-153
Multistrada 1200s	1200		KN-153
Multistrada 1200s Sport	1198	DU-1210	KN-153
Multistrada 1200s Touring	1198	DU-1210	KN-153
Streetfighter	1100	DU-1007	KN-153
Streetfighter S	1100		KN-153
2009 DUCATI			
848	848	DU-1007	KN-153
1098R	1198	DU-1007	
1098R Bayliss LE	1198	DU-1007	
1198	1198	DU-1007	KN-153
1198S	1198	DU-1007	KN-153
GT1000 Touring	992	DU-1006	KN-153
Hypermotard 1100	1079	DU-1006	KN-153
Hypermotard 1100s	1079	DU-1006	KN-153
Monster 696	696	DU-6908	KN-153
Monster 1100	1100	DU-6908	KN-153
Monster 1100s	1100	DU-6908	KN-153
Multistrada 1100s	1078	DU-1004	KN-153
Sport 1000S	992	DU-1006	KN-153
2008 DUCATI			
848	848	DU-1007	KN-153
1098	1098	DU-1007	KN-153
1098R	1198	DU-1007	
1098s	1098	DU-1007	KN-153
Desmosedici RR	968		KN-153
GT1000	992		KN-153
Hypermotard 1100	1079	DU-1006	KN-153
Hypermotard 1100s	1079	DU-1006	KN-153
Monster 695	696	DU-9001	KN-153
Monster 696	696	DU-6908	KN-153
Monster S2R 1000	992	DU-9001	KN-153
Monster S4Rs Testastretta	997		KN-153
Monster S4Rs Tricolore	998	DU-9001	KN-153
Multistrada 1100s	1078	DU-1004	KN-153
Sport 1000 Biposto	992	DU-1006	KN-153
Sport 1000S	992	DU-1006	KN-153
2007 DUCATI			
800SS	800	DU-9098	KN-153
1098	1098	DU-1007	KN-153
1098s	1098	DU-1007	KN-153
1098s Tricolore	1098	DU-1007	KN-153
GT1000	992	DU-1006	KN-153
Monster 695	695	DU-9001	KN-153
Monster S2R	803	DU-9001	KN-153
Monster S2R 1000	992	DU-9001	KN-153
Monster S4R Testastretta	997	DU-9001	KN-153
Monster S4Rs Testastretta	997	DU-9001	KN-153
Multistrada 1100	1078	DU-1004	KN-153
Multistrada 1100s	1078	DU-1004	KN-153
Sport 1000 Biposto	992	DU-1006	KN-153
Sport 1000S	992	DU-1006	KN-153
ST3	992	DU-9098	KN-153
ST3s	992	DU-9098	KN-153
2006 DUCATI			
749	749		KN-153
749 Dark	749		KN-153
749R	749		KN-153
749S	749		KN-153
800SS	800	DU-9098	KN-153
999	999		KN-153
999R	999		KN-153
999S	999		KN-153
Monster 620	620	DU-9001	KN-153
Monster 620 Dark	620	DU-9001	KN-153
Monster S2R	803	DU-9001	KN-153
Monster S2R 1000	992	DU-9001	KN-153
Monster S2R Dark	803	DU-9001	KN-153
Monster S4R	996	DU-9001	KN-153
Multistrada 620	620	DU-1004	KN-153
Multistrada 620 Dark	620	DU-1004	KN-153
Multistrada 1000 DS	999	DU-1004	KN-153
Multistrada 1000s DS	999	DU-1004	KN-153
Paul Smart 1000 LE	992	DU-1006	KN-153
Sport 1000	992	DU-1006	KN-153
ST3	992	DU-9098	KN-153
2005 DUCATI			
749	749		KN-153
749 Dark	749		KN-153
749R	749		KN-153

*Indicates 2 filters required ♦ - Intake kit available - see page 80 Applications updated daily at knfilters.com

Vehicle	Engine Type	Air Filter	Oil Filter
2005 DUCATI			
749S	749		KN-153
800SS	803	DU-9098	KN-153
999	999		KN-153
999R	999		KN-153
999S	999		KN-153
Monster 620	620	DU-9001	KN-153
Monster 620 Dark	620	DU-9001	KN-153
Monster 620 Dark i.e.	620		KN-153
Monster 620 Dark MD	620	DU-9001	KN-153
Monster 620 i.e.	620		KN-153
Monster S2R	803	DU-9001	KN-153
Monster S2R Dark	803	DU-9001	KN-153
Monster S4R	996	DU-9001	KN-153
Multistrada 620	618	DU-1004	KN-153
Multistrada 620 Dark	618	DU-1004	KN-153
Multistrada 1000 DS	999	DU-1004	KN-153
Multistrada 1000s DS	999	DU-1004	KN-153
ST3	992	DU-9098	KN-153
ST4s	992	DU-9098	KN-153
2004 DUCATI			
749	749		KN-153
749R	749		KN-153
749S	749		KN-153
998 Matrix	998		KN-153
999	999		KN-153
999R	999		KN-153
999S	999		KN-153
Monster 620 Dark	618	DU-9001	KN-153
Monster 620 Dark i.e.	620		KN-153
Monster 620 Dark MD	620	DU-9001	KN-153
Monster 620 i.e.	620		KN-153
Monster 800 i.e.	800	DU-9001	KN-153
Monster 1000 i.e.	1000	DU-9001	KN-153
Monster 1000S i.e.	1000	DU-9001	KN-153
Monster S4R	916	DU-9001	KN-153
Multistrada 1000 DS	1000	DU-1004	KN-153
ST3	992	DU-9098	KN-153
ST4s	992	DU-9098	KN-153
2003 DUCATI			
620 Sport	620	DU-9098	KN-153
749	749		KN-153
749S	749		KN-153
800SS	800	DU-9098	KN-153
998	998		KN-153
999	999		KN-153
999S	999		KN-153
Monster 620	618	DU-9001	KN-153
Monster 620 Dark	618	DU-9001	KN-153
Monster 620 i.e.	620		KN-153
Monster 620s	620	DU-6202	KN-153
Monster 800 i.e.	800		KN-153
Monster 800s i.e.	800	DU-9001	KN-153
Monster 1000 i.e.	1000	DU-9001	KN-153
Multistrada 1000 DS	1000	DU-1004	KN-153
ST4s	992	DU-9098	KN-153
2002 DUCATI			
748	748		KN-153
748R	748		KN-153
748S	748		KN-153
750SS i.e.	750	DU-9098	KN-153
900SS i.e.	900	DU-0900	KN-153
998	998		KN-153
998R	998		KN-153
998S	998		KN-153
MH900e	900		KN-153
Monster 620	620	DU-9001	KN-153
Monster 620s	620	DU-6202	KN-153
Monster 750 Dark i.e.	750	DU-9001	KN-153
Monster 750 i.e.	750	DU-9001	KN-153
Monster 750s i.e.	750	DU-9001	KN-153
Monster 900	904	DU-9098	KN-153
Monster 900 Dark i.e.	900	DU-9098	KN-153
Monster 900 i.e.	904	DU-9098	KN-153
Monster S4	916	DU-9001	KN-153
ST2	944	DU-9098	KN-153
ST4s	992	DU-9098	KN-153
2001 DUCATI			
748	748		KN-153
748R	748		KN-153
748S	748		KN-153
750 Sport	750		KN-153
750SS i.e.	750	DU-9098	KN-153
900SS i.e.	900	DU-9098	KN-153
996	996		KN-153
996R	996		KN-153
996S	996		KN-153
M600 Monster	600	DU-0900	KN-153
M750 Monster	750	DU-9098	KN-153
Monster 620 Dark MD	620	DU-9001	KN-153
Monster 900	904	DU-9098	KN-153
Monster 900 i.e.	904	DU-9098	KN-153
Monster M900 Cromo	900	DU-0900	KN-153
Monster S4	916	DU-9001	KN-153
ST2	944	DU-9098	KN-153
ST4	992	DU-9098	KN-153
ST4s	992	DU-9098	KN-153
2000 DUCATI			
748	748		KN-153
748R	748		KN-153
748S	748		KN-153
750SS i.e.	750	DU-9098	KN-153
900SS i.e.	900	DU-9098	KN-153
996	996		KN-153
996 SPS	996		KN-153
996S	996		KN-153
M750 Monster	750	DU-9098	KN-153
Monster 750 Dark	750	DU-9098	KN-153
Monster 900	904	DU-9098	KN-153
Monster 900 i.e.	904	DU-9098	KN-153
Monster M900 Dark	900	DU-9098	KN-153
Monster M900 S	900	DU-9098	KN-153
ST2	944	DU-9098	KN-153
ST4	916	DU-9098	KN-153
1999 DUCATI			
748	748		KN-153
748 Biposto	748		KN-153
748 SPS	748		KN-153
750SS	742	DU-9098	KN-153
900SS	904	DU-9098	KN-153
996	996		KN-153
996 Biposto	996		KN-153
996 SPS	996		KN-153
M750 Monster	750	DU-9098	KN-153
Monster 750 Dark	750	DU-9098	KN-153

Vehicle	Engine Type	Air Filter	Oil Filter
1999 DUCATI			
Monster 900	904	DU-9098	KN-153
Monster M900 City	900	DU-9098	KN-153
ST2	944	DU-9098	KN-153
ST4	916	DU-9098	KN-153
1998 DUCATI			
748	748		KN-153
748 Biposto	748		KN-153
748 SP	748		KN-153
900SS	904	DU-0900	KN-153
900SS FE	900	DU-0900	KN-153
916 Biposto	916		KN-153
916 SP	916		KN-153
916 Strada	916		KN-153
M600 Monster	600	DU-0900	KN-153
M750 Monster	750	DU-0900	KN-153
Monster 900	904	DU-0900	KN-153
ST2	944	DU-9098	KN-153
1997 DUCATI			
748	748		KN-153
748 Biposto	748		KN-153
748 SP	748		KN-153
900SS	904	DU-0900	KN-153
916 Biposto	916		KN-153
916 SP	916		KN-153
916 Strada	916		KN-153
M750 Monster	750	DU-0900	KN-153
Monster 900	904	DU-0900	KN-153
1996 DUCATI			
750SS	742	DU-0900	KN-153
900 SuperLight	904	DU-0900	KN-153
900SS	904	DU-0900	KN-153
916 Biposto	916		KN-153
916 Strada	916		KN-153
Monster 900	904	DU-0900	KN-153
1995 DUCATI			
900SS	904	DU-0900	KN-153
916 SP	916		KN-153
Monster 900	904	DU-0900	KN-153
1994 DUCATI			
900SS	904	DU-0900	KN-153
Monster 900	904	DU-0900	KN-153
1993 DUCATI			
750SS	742	DU-0900	KN-153
888 Strada	888		KN-153
900SS	904	DU-0900	KN-153
1992 DUCATI			
750SS	742	DU-0900	KN-153
851 Strada	851		KN-153
900SS	904	DU-0900	KN-153
907 i.e.	907		KN-153
1991 DUCATI			
851 Strada	851		KN-153
900SS	904	DU-0900	KN-153
1988 DUCATI			
750 Paso	750	DU-0900	KN-153
1987 DUCATI			
750 Paso	750	DU-0900	KN-153

Vehicle	Engine Type	Air Filter	Oil Filter
1984 DUCATI			
900 S2	900		KN-153
1981 DUCATI			
900 S2	900		KN-153
1979 DUCATI			
900 S2	900		KN-153
1978 DUCATI			
Desmo	900	DU-0202	
1998 EAGLE			
Talon	2.0L L4 F/I	33-2072	HP-2004
Talon TSi	2.0L L4 F/I	33-2072 ♦	HP-1010
1997 EAGLE			
Talon	2.0L L4 F/I	33-2072	HP-2004
Talon TSi	2.0L L4 F/I	33-2072 ♦	HP-1010
Vision	3.5L V6 F/I	33-2066-1	HP-2004
1996 EAGLE			
Talon	2.0L L4 F/I	33-2072	HP-2004
Talon TSi	2.0L L4 F/I	33-2072 ♦	HP-1010
Vision	3.5L V6 F/I	33-2066-1	HP-2004
1995 EAGLE			
Summit	1.5L L4 F/I	33-2074	HP-1010
Talon	2.0L L4 F/I	33-2072	HP-2004
Talon TSi	2.0L L4 F/I	33-2072 ♦	HP-1010
1994 EAGLE			
Summit	1.8L L4 F/I	33-2074	HP-1010
Talon	1.8L L4 F/I	E-2875	HP-1010
Talon	2.0L L4 F/I	E-2875	HP-1010
1993 EAGLE			
Talon	1.8L L4 F/I		HP-1005
Talon	2.0L L4 F/I	E-2875	HP-1010
		E-2875 ♦	HP-1010
1992 EAGLE			
Talon	2.0L L4 F/I	E-2875	HP-1005
		E-2875 ♦	HP-1005
1991 EAGLE			
Talon	2.0L L4 F/I	E-2875	HP-1005
		E-2875 ♦	HP-1005
1990 EAGLE			
Talon	2.0L L4 F/I	E-2875	HP-1005
		E-2875 ♦	HP-1005
2005 FERRARI			
360	3.6L V8 F/I	33-2854*	
2004 FERRARI			
360	3.6L V8 F/I	33-2854*	
456 M GT	5.5L V12 F/I	33-2816*	
2003 FERRARI			
360	3.6L V8 F/I	33-2854*	
456 M GT	5.5L V12 F/I	33-2816*	
2002 FERRARI			
360	3.6L V8 F/I	33-2854*	
456 M GT	5.5L V12 F/I	33-2816*	
550 Maranello	5.5L V12 F/I	33-2816*	
2001 FERRARI			
360	3.6L V8 F/I	33-2854*	
456 M	5.5L V12 F/I	33-2816*	
550 Maranello	5.5L V12 F/I	33-2816*	

*Indicates 2 filters required ♦ - Intake kit available - see page 80 Applications updated daily at knfilters.com

Vehicle	Engine Type	Air Filter	Oil Filter
2000 FERRARI			
360	3.6L V8 F/I	33-2854*	
456 M	5.5L V12 F/I	33-2816*	
550 Maranello	5.5L V12 F/I	33-2816*	
F355	3.5L V8 F/I	33-2816*	
1999 FERRARI			
360	3.6L V8 F/I	33-2854*	
550 Maranello	5.5L V12 F/I	33-2816*	
F355	3.5L V8 F/I	33-2816*	
F355 Spider	3.5L V8 F/I	33-2816*	
1998 FERRARI			
550 Maranello	5.5L V12 F/I	33-2816*	
F355 F1	3.5L V8 F/I	33-2816*	
F355 Spider	3.5L V8 F/I	33-2816*	
1997 FERRARI			
456 GT	5.5L V12 F/I	33-2816	
550 Maranello	5.5L V12 F/I	33-2816*	
F355 GTS	3.5L V8 F/I	33-2816*	
F355 Spider	3.5L V8 F/I	33-2816*	
1996 FERRARI			
F355 GTS	3.5L V8 F/I	33-2816*	
F355 Spider	3.5L V8 F/I	33-2816*	
1995 FERRARI			
348 TS	3.4L V8 F/I	33-2656	
456 GT	5.5L V12 F/I	33-2816*	
F355 Berlinetta	3.5L V8 F/I	33-2816*	
F355 GTS	3.5L V8 F/I	33-2816*	
1992 FERRARI			
348 TB	3.4L V8 F/I	33-2656	
1991 FERRARI			
348 TS	3.4L V8 F/I	33-2656	
Testarossa	4.9L H12 F/I	33-2799	
1990 FERRARI			
348 TS	3.4L V8 F/I	33-2656	
Testarossa	4.9L H12 F/I	33-2799	
1989 FERRARI			
328 GTS	3.2L V8 F/I		HP-3001
Mondial t	3.4L V8 F/I	33-2656	
Testarossa	4.9L H12 F/I	33-2799	
Testarossa	5.0L H12 F/I	33-2799	
1988 FERRARI			
328 GTS	3.2L V8 F/I		HP-3001
Mondial 3.2	3.2L V8 F/I	33-2662	
Testarossa	4.9L H12 F/I	33-2799	
Testarossa	5.0L H12 F/I	33-2799	
1987 FERRARI			
328 GTS	3.2L V8 F/I		HP-3001
Testarossa	4.9L H12 F/I	33-2799	
Testarossa	5.0L H12 F/I	33-2799	
1986 FERRARI			
328 GTS	3.2L V8 F/I		HP-3001
Mondial 3.2	3.2L V8 F/I	33-2662	HP-3001
1985 FERRARI			
308 GTS	3.0L V8 F/I	33-2518	HP-3001
Mondial	3.0L V8 F/I	33-2662	HP-3001
Mondial 8	3.0L V8 F/I	33-2662	HP-3001
1984 FERRARI			
308 GTS	3.0L V8 F/I	33-2518	HP-3001
1984 FERRARI			
Mondial	3.0L V8 F/I		HP-3001
Mondial 8	3.0L V8 F/I		HP-3001
1983 FERRARI			
308 GTS	3.0L V8 F/I	33-2518*	HP-3001
Mondial	3.0L V8 F/I	33-2019*	HP-3001
Mondial 8	3.0L V8 F/I	33-2019*	HP-3001
1982 FERRARI			
308 GTSi	3.0L V8 F/I	33-2019*	HP-3001
1981 FERRARI			
308 GTSi	3.0L V8 F/I	33-2019*	HP-3001
1980 FERRARI			
308 GTS	3.0L V8 CARB	E-2930	HP-3001
1978 FERRARI			
308 GTS	2.9L V8 CARB	E-2930	HP-3001
308 GTS	3.0L V8 CARB	E-2930	HP-3001
1976 FERRARI			
308 GTB	3.0L V8 CARB	E-2930	HP-3001
1975 FERRARI			
308 GT4	3.0L V8 CARB	E-2930	HP-3001
1973 FERRARI			
Dino 246 GTS	148 V6 CARB	E-9240	HP-3001
2013 FIAT			
500	1.4L L4 F/I	33-2471	
500	1.4L L4 F/I - Non-US, exc. Turbo	33-2842	
500 Turbo	1.4L L4 F/I	33-2471	
500L	1.4L L4 F/I - Non-US, exc. Turbo	33-2842	
Punto	1.4L L4 F/I - 8v	33-2931 ♦	
Punto	1.4L L4 F/I - Turbo	33-2935 ♦	
Punto Evo	0.9L L2 F/I	33-2981	
2012 FIAT			
500	0.9L L2 F/I - Turbo	33-2981	
500	1.2L L4 F/I	33-2931	
500	1.3L L4 DSL	33-2984	
500	1.4L L4 F/I - Non-US, exc. Turbo	33-2842 ♦	
500	1.4L L4 F/I - US, exc. Turbo	33-2471	
500L	0.9L L2 F/I - Turbo	33-2981	
500L	1.3L L4 DSL	33-2984	
500L	1.4L L4 F/I - Non-US, exc. Turbo	33-2842	
Bravo	1.4L L4 F/I - exc. Turbo	33-2842 ♦	
Bravo	1.4L L4 F/I - Turbo	E-2995 ♦	
Bravo	2.0L L4 DSL	E-2995	
Freemont	3.6L V6 F/I	33-2470	
Punto Evo	1.4L L4 F/I - 16v	33-2842 ♦	
Punto Evo	1.4L L4 F/I - 8v	33-2931 ♦	
Punto Evo	1.4L L4 F/I - Turbo	33-2935 ♦	
Punto Evo	1.6L L4 DSL	E-2995	
2011 FIAT			
500	0.9L L2 F/I	33-2981	
500	1.2L L4 F/I	33-2931 ♦	
500	1.3L L4 DSL - OEM 51775324	33-2932	
500	1.3L L4 DSL - OEM 51873070	33-2984	
500	1.4L L4 F/I		HP-1010
500	1.4L L4 F/I - exc. Turbo	33-2842 ♦	HP-1010
Bravo	1.4L L4 F/I - Turbo	E-2995 ♦	

*Indicates 2 filters required ♦ - Intake kit available - see page 80 Applications updated daily at knfilters.com

AIR & OIL FILTERS

Vehicle	Engine Type	Air Filter	Oil Filter
2011 FIAT			
Bravo	1.6L L4 DSL	E-2995	
Bravo	2.0L L4 DSL	E-2995	
Freemont	3.6L V6 F/I	33-2470	
Linea	1.3L L4 DSL - OEM 51775324	33-2932	
Linea	1.3L L4 DSL - OEM 51873070	33-2984	
Punto Evo	1.3L L4 DSL - OEM 51775324	33-2932	
Punto Evo	1.3L L4 DSL - OEM 51873070	33-2984	
Punto Evo	1.4L L4 F/I - 16v	33-2842 ♦	
Punto Evo	1.4L L4 F/I - 8v	33-2931 ♦	
Punto Evo	1.4L L4 F/I - Turbo	33-2935 ♦	
Punto Evo	1.6L L4 DSL	E-2995	
2010 FIAT			
500	1.3L L4 DSL - OEM 51775324	33-2932	
500	1.4L L4 F/I		HP-1010
500	1.4L L4 F/I - exc. Turbo	33-2842 ♦	HP-1010
Bravo	1.4L L4 F/I - Turbo	E-2995 ♦	
Grande Punto	1.6L L4 DSL	E-2995	
Linea	1.3L L4 DSL - OEM 51775324	33-2932	
Panda II	1.3L L4 DSL - OEM 51775324	33-2932	
Punto Evo	1.3L L4 DSL - OEM 51775324	33-2932	
Punto Evo	1.4L L4 F/I - 8v	33-2931 ♦	
Punto Evo	1.4L L4 F/I - Turbo	33-2935 ♦	
2009 FIAT			
500	1.3L L4 DSL - OEM 51775324	33-2932	
500	1.4L L4 F/I		HP-1010
Grande Punto	1.3L L4 DSL - OEM 51775324	33-2932	
Grande Punto	1.4L L4 F/I - Turbo	33-2935 ♦	
Linea	1.3L L4 DSL - OEM 51775324	33-2932	
Linea	1.4L L4 F/I - exc. Turbo	33-2931	
2008 FIAT			
Bravo	1.4L L4 F/I - Turbo	E-2995 ♦	
Grande Punto	1.4L L4 F/I - Turbo	33-2935 ♦	
Sedici	1.9L L4 DSL	33-2399	
2007 FIAT			
Grande Punto	1.3L L4 DSL - OEM 51775324	33-2932	
Grande Punto	1.4L L4 F/I - Turbo	33-2935 ♦	
Palio	1.1L L4 F/I	33-2793	
Palio	1.6L L4 F/I	33-2793	
Panda II	1.2L L4 F/I	33-2870 ♦	
2006 FIAT			
Palio	1.2L L4 F/I	33-2793	
Palio	1.6L L4 F/I	33-2793	
Stilo	2.4L L5 F/I	33-2846 ♦	
2005 FIAT			
Palio	1.9L L4 DSL	33-2793	
Punto	1.8L L4 F/I	E-2862 ♦	
Seicento	0.9L L4 F/I	33-2682	
Seicento	1.1L L4 F/I	33-2586 ♦	
2004 FIAT			
Ducato	2.8L L4 DSL	E-9231-1	
Palio	1.9L L4 DSL	33-2793	
Punto	1.8L L4 F/I	E-2862 ♦	
Stilo	1.4L L4 F/I	33-2842 ♦	
2003 FIAT			
Palio	1.2L L4 F/I	33-2793	
Palio	1.6L L4 F/I	33-2793	
Punto	1.8L L4 F/I	E-2862 ♦	
2002 FIAT			
Multipla	1.6L L4 F/I	33-2224	
Palio	1.2L L4 F/I	33-2793	
Punto	1.8L L4 F/I	E-2862 ♦	
2001 FIAT			
Punto	1.2L L4 F/I - 16v	33-2197 ♦	
Punto	1.2L L4 F/I - 60BHP, 8v, Series II	E-2863 ♦	
2000 FIAT			
Punto	1.2L L4 F/I - 58/60BHP	33-2586 ♦	
Punto	1.8L L4 F/I	E-2862 ♦	
1999 FIAT			
Marea	2.0L L5 F/I	33-2748-1 ♦	
1998 FIAT			
Panda	1.1L L4 F/I	33-2544	
1997 FIAT			
Punto	1.7L L4 DSL	33-2632	
1995 FIAT			
Coupe	2.0L L4 F/I	33-2689 ♦	
1994 FIAT			
Punto	1.2L L4 F/I - 75	33-2729 ♦	
Punto	1.4L L4 F/I	33-2730 ♦	
1993 FIAT			
Uno	1.0L L4 F/I	33-2544	
Uno	1.1L L4 F/I	33-2544	
Uno	1.4L L4 F/I - exc. Turbo	33-2586 ♦	
Uno	1.4L L4 F/I - Turbo	33-2525 ♦	
1992 FIAT			
Panda	0.7L L4 F/I	33-2544	
Uno	0.9L L4 CARB	33-2544	
Uno	1.0L L4 F/I	33-2544	
Uno	1.1L L4 F/I	33-2544	
1990 FIAT			
Uno	0.9L L4 CARB	33-2544	
1985 FIAT			
Regata	1.9L L4 DSL	33-2001	
1982 FIAT			
124	2.0L L4 CARB	33-2001	
124	2.0L L4 F/I	33-2001	
X1/9	1.5L L4 CARB - Non-US	E-9122	
X1/9	1.5L L4 F/I - US	E-2350	HP-2004
1981 FIAT			
124	2.0L L4 CARB	33-2001	
124	2.0L L4 F/I	33-2001	HP-2004
X1/9	1.5L L4 CARB - Non-US	E-9122	
X1/9	1.5L L4 F/I - US	E-2350	HP-2004
1980 FIAT			
124	2.0L L4 CARB	33-2001	HP-2004
124	2.0L L4 F/I	33-2001	HP-2004
X1/9	1.5L L4 CARB - Non-US	E-9122	
X1/9	1.5L L4 CARB - US	E-2350	HP-2004
X1/9	1.5L L4 F/I - US		HP-2004

*Indicates 2 filters required ♦ - Intake kit available - see page 80 Applications updated daily at knfilters.com

Partial Listing - Complete List of Vehicles and Applications at knfilters.com

Vehicle	Engine Type	Air Filter	Oil Filter
1979 FIAT			
124	2.0L L4 CARB	33-2001	
128	1.3L L4 CARB - Sport	E-2570	
X1/9	1.5L L4 CARB - Non-US	E-9122	
X1/9	1.5L L4 CARB - US	E-2350	HP-2004
1978 FIAT			
124	1.8L L4 CARB	E-2670	
X1/9	1.3L L4 CARB	E-2710	HP-2004
1977 FIAT			
124	1.8L L4 CARB	E-2670	
127	1.0L L4 CARB	E-2570	
X1/9	1.3L L4 CARB	E-2710	HP-2004
1976 FIAT			
124	1.8L L4 CARB	E-2670	
1975 FIAT			
X1/9	1.3L L4 CARB	E-2710	HP-2004
1974 FIAT			
124	1.8L L4 CARB	E-2670	
X1/9	1.3L L4 CARB	E-2710	HP-2004
1972 FIAT			
124	1.5L L4 CARB	E-2670	
127	0.9L L4 CARB	E-2570	
128	1.1L L4 CARB	E-2570	HP-2004
850	0.8L L4 CARB	E-2540	
1971 FIAT			
850	0.9L L4 CARB	E-2540	
1970 FIAT			
130	3.2L V6 CARB - OEM 4371573	E-2710	
1968 FIAT			
1500	1.5L L4 CARB	E-2550	
1967 FIAT			
850	55 L4 CARB	E-2540	
1500	90 L4 CARB	E-2550	
2013 FORD			
C-Max	2.0L L4 F/I		HP-1002
C-Max II	1.6L L4 DSL	E-2993 ♦	
C-Max II	1.6L L4 F/I	E-2993 ♦	
C-Max II	2.0L L4 DSL	E-2993 ♦	
E150	4.6L V8 F/I	E-0945	HP-2010
E150	5.4L V8 F/I	E-0945	HP-2010
E250	5.4L V8 F/I	E-0945	HP-2010
E350 Super Duty	5.4L V8 F/I	E-0945	HP-2010
E350 Super Duty	6.8L V10 F/I	E-0945	HP-2010
E450 Super Duty	6.8L V10 F/I	E-0945	HP-2010
Edge	2.0L L4 F/I	33-2395	HP-1002
Edge	3.5L V6 F/I	33-2395 ♦	HP-2011
Edge	3.7L V6 F/I	33-2395 ♦	HP-2011
Escape	1.6L L4 F/I	E-2993	HP-1002
Escape	2.0L L4 F/I	E-2993	HP-1002
Escape	2.5L L4 F/I		HP-1002
Expedition	5.4L V8 F/I	33-2385	HP-2010
Explorer	2.0L L4 F/I	33-2395	HP-1002
Explorer	3.5L V6 F/I	33-2395 ♦	HP-2011
Explorer Sport	3.5L V6 F/I	33-2395	HP-2011
F150	3.5L V6 F/I	33-2385 ♦	HP-2011
F150	3.7L V6 F/I	33-2385	HP-2011
F150	5.0L V8 F/I	33-2385 ♦	HP-2011
F150	6.2L V8 F/I	33-2385	HP-2010

Vehicle	Engine Type	Air Filter	Oil Filter
2013 FORD			
F250 Super Duty	6.2L V8 F/I	33-2385	HP-2010
F350 Super Duty	6.2L V8 F/I	33-2385	HP-2010
F450 Super Duty	6.2L V8 F/I		HP-2010
F550 Super Duty	6.8L V10 F/I	33-2385	HP-2010
F150 SVT Raptor	6.2L V8 F/I	33-2385	HP-2010
Fiesta	1.6L L4 F/I	33-2955 ♦	HP-1002
Fiesta VI	1.4L L4 DSL	33-2955	
Fiesta VI	1.4L L4 F/I	33-2955	
Fiesta VI	1.6L L4 DSL	33-2955	
Fiesta VI	1.6L L4 F/I	33-2955	
Flex	3.5L V6 F/I	33-2395	HP-2011
Focus	2.0L L4 F/I	E-2993 ♦	HP-1002
Focus III	1.0L L3 F/I	E-2993 ♦	
Focus III	1.6L L4 DSL	E-2993 ♦	
Focus III	1.6L L4 F/I	E-2993 ♦	
Focus III	2.0L L4 DSL	E-2993 ♦	
Focus III	2.0L L4 F/I	E-2993 ♦	
Fusion	2.0L L4 F/I		HP-1002
Fusion	2.5L L4 F/I		HP-1002
Galaxy II	1.6L L4 DSL	33-2393	
Galaxy II	1.6L L4 F/I	33-2393	
Galaxy II	2.0L L4 DSL	33-2393	
Galaxy II	2.0L L4 F/I	33-2393	
Mondeo IV	1.6L L4 DSL	33-2393	
Mondeo IV	1.6L L4 F/I	33-2393	
Mondeo IV	2.0L L4 DSL	33-2393	
Mondeo IV	2.0L L4 F/I	33-2393	
Mustang	3.7L V6 F/I	33-2431 ♦	HP-2011
Mustang	5.4L V8 F/I		HP-2010
Mustang Boss 302	5.0L V8 F/I	33-2431	HP-2011
Mustang GT	5.0L V8 F/I	33-2431 ♦	HP-2011
Mustang Shelby GT500	5.8L V8 F/I	E-1993 ♦	HP-2010
S-Max	1.6L L4 DSL	33-2393	
S-Max	1.6L L4 F/I	33-2393	
S-Max	2.0L L4 DSL	33-2393	
S-Max	2.0L L4 F/I	33-2393	
Taurus	2.0L L4 F/I	33-2395	HP-2011
Taurus	3.5L V6 F/I	33-2395	HP-2011
Taurus SHO	3.5L V6 F/I	33-2395 ♦	HP-2011
Transit Connect	2.0L L4 F/I		HP-1002
2012 FORD			
E150	4.6L V8 F/I	E-0945	HP-2010
E150	5.4L V8 F/I	E-0945	HP-2010
E250	4.6L V8 F/I	E-0945	HP-2010
E250	5.4L V8 F/I	E-0945	HP-2010
E350 Super Duty	5.4L V8 F/I	E-0945 ♦	HP-2010
E350 Super Duty	6.8L V10 F/I	E-0945 ♦	HP-2010
E450 Super Duty	5.4L V8 F/I	E-0945 ♦	HP-2010
E450 Super Duty	6.8L V10 F/I	E-0945 ♦	HP-2010
Edge	2.0L L4 F/I	33-2395	HP-1002
Edge	3.5L V6 F/I	33-2395 ♦	HP-2011
Edge	3.7L V6 F/I	33-2395 ♦	HP-2011
Escape	2.5L L4 F/I	33-2187	HP-1002
Escape	3.0L V6 F/I	E-1990	HP-2011
Escape Hybrid	2.5L L4 F/I	33-2347	HP-1002
Expedition	5.4L V8 F/I	33-2385 ♦	HP-2010
Explorer	2.0L L4 F/I	33-2395	HP-1002
Explorer	3.5L V6 F/I	33-2395 ♦	HP-2011
F150	3.5L V6 F/I	33-2385 ♦	HP-2011
F150	3.7L V6 F/I	33-2385	HP-2011
F150	5.0L V8 F/I	33-2385 ♦	HP-2011
F150	6.2L V8 F/I	33-2385 ♦	HP-2010

*Indicates 2 filters required ♦ - Intake kit available - see page 80 Applications updated daily at knfilters.com

AIR & OIL FILTERS

Vehicle	Engine Type	Air Filter	Oil Filter
2012 FORD			
F250 Super Duty	6.2L V8 F/I	33-2385 ♦	HP-2010
F250 Super Duty	6.7L V8 DSL		HP-4005
F350 Super Duty	6.2L V8 F/I	33-2385 ♦	HP-2010
F350 Super Duty	6.7L V8 DSL		HP-4005
F450 Super Duty	6.7L V8 DSL		HP-4005
F450 Super Duty	6.8L V10 F/I	33-2385	HP-2010
F550 Super Duty	6.7L V8 DSL		HP-4005
F550 Super Duty	6.8L V10 F/I	33-2385	HP-2010
F150 SVT Raptor	6.2L V8 F/I	33-2385 ♦	HP-2010
Fiesta	1.6L L4 F/I	33-2955 ♦	HP-1002
Fiesta VI	1.25L L4 F/I	33-2955 ♦	
Fiesta VI	1.4L L4 DSL	33-2955	
Fiesta VI	1.4L L4 F/I	33-2955	
Fiesta VI	1.6L L4 DSL	33-2955	
Flex	3.5L V6 F/I	33-2395	HP-2011
		33-2395 ♦	HP-2011
Focus	2.0L L4 F/I	E-2993 ♦	HP-1002
Focus III	1.0L L3 F/I	E-2993 ♦	
Focus III	1.6L L4 DSL	E-2993 ♦	
Focus III	1.6L L4 F/I	E-2993 ♦	
Focus III	2.0L L4 DSL	E-2993 ♦	
Focus III	2.0L L4 F/I	E-2993 ♦	
Fusion	1.4L L4 F/I	33-2853	
Fusion	1.6L L4 F/I	33-2853	
Fusion	2.5L L4 F/I	33-2357 ♦	HP-1002
Fusion	3.0L V6 F/I	33-2340	HP-2011
Fusion	3.5L V6 F/I	33-2395	HP-2011
Galaxy II	1.6L L4 DSL	33-2393	
Galaxy II	1.6L L4 F/I	33-2393	
Galaxy II	2.0L L4 DSL	33-2393	
Galaxy II	2.0L L4 F/I	33-2393	
Mondeo IV	1.6L L4 DSL	33-2393	
Mondeo IV	1.6L L4 F/I	33-2393	
Mondeo IV	2.0L L4 DSL	33-2393	
Mondeo IV	2.0L L4 F/I	33-2393	
Mustang	3.7L V6 F/I	33-2431 ♦	HP-2011
Mustang Boss 302	5.0L V8 F/I	33-2431	HP-2011
Mustang GT	5.0L V8 F/I	33-2431 ♦	HP-2011
Mustang Shelby GT500	5.4L V8 F/I	E-1993 ♦	HP-2010
S-Max	1.6L L4 DSL	33-2393	
S-Max	1.6L L4 F/I	33-2393	
S-Max	2.0L L4 DSL	33-2393	
S-Max	2.0L L4 F/I	33-2393	
Taurus	3.5L V6 F/I	33-2395 ♦	HP-2011
Taurus SHO	3.5L V6 F/I	33-2395 ♦	HP-2011
Transit Connect	2.0L L4 F/I	33-2436	HP-1002
2011 FORD			
Crown Victoria	4.6L V8 F/I	33-2272	
		33-2272 ♦	
Crown Victoria	4.6L V8 F/I - exc. Police Package	33-2272	HP-2010
Crown Victoria	4.6L V8 F/I - Police Package. after 11/13/08	33-2272	HP-1002
E150	4.6L V8 F/I	E-0945	HP-2010
E150	5.4L V8 F/I	E-0945	HP-2010
E250	4.6L V8 F/I	E-0945	HP-2010
E250	5.4L V8 F/I	E-0945	HP-2010
E350 Super Duty	5.4L V8 F/I	E-0945 ♦	HP-2010
E350 Super Duty	6.8L V10 F/I	E-0945 ♦	HP-2010
E450 Super Duty	5.4L V8 F/I		HP-2010
E450 Super Duty	6.8L V10 F/I	E-0945 ♦	HP-2010
Edge	3.5L V6 F/I	33-2395 ♦	HP-2011
Edge	3.7L V6 F/I	33-2395 ♦	HP-2011

Vehicle	Engine Type	Air Filter	Oil Filter
2011 FORD			
Escape	2.5L L4 F/I	33-2187	HP-1002
Escape	3.0L V6 F/I	E-1990	HP-2011
Escape Hybrid	2.5L L4 F/I	33-2347	HP-1002
Expedition	5.4L V8 F/I	33-2385 ♦	HP-2010
Explorer	2.0L L4 F/I		HP-1002
Explorer	3.5L V6 F/I	33-2395 ♦	HP-2011
F150	3.5L V6 F/I	33-2385 ♦	HP-2011
F150	3.7L V6 F/I	33-2385	HP-2011
F150	4.6L V8 F/I	33-2385	
F150	5.0L V8 F/I	33-2385 ♦	HP-2011
F150	5.4L V8 F/I	33-2385	
F150	6.2L V8 F/I	33-2385 ♦	HP-2010
F250 Super Duty	6.2L V8 F/I	33-2385 ♦	HP-2010
F250 Super Duty	6.7L V8 DSL		HP-4005
F250 Super Duty	6.8L V10 F/I	33-2385	HP-2010
F350 Super Duty	6.2L V8 F/I	33-2385 ♦	HP-2010
F350 Super Duty	6.7L V8 DSL		HP-4005
F350 Super Duty	6.8L V10 F/I	33-2385	HP-2010
F450 Super Duty	6.2L V8 F/I	33-2385	HP-2010
F450 Super Duty	6.7L V8 DSL		HP-4005
F450 Super Duty	6.8L V10 F/I	33-2385	HP-2010
F550 Super Duty	6.2L V8 F/I	33-2385	HP-2010
F550 Super Duty	6.7L V8 DSL		HP-4005
F550 Super Duty	6.8L V10 F/I	33-2385	HP-2010
F150 SVT Raptor	6.2L V8 F/I	33-2385 ♦	HP-2010
Fiesta	1.6L L4 F/I	33-2955 ♦	HP-1002
Fiesta VI	1.25L L4 F/I	33-2955 ♦	
Fiesta VI	1.4L L4 F/I	33-2955 ♦	
Fiesta VI	1.6L L4 DSL	33-2955	
Fiesta VI	1.6L L4 F/I	33-2955 ♦	
Flex	3.5L V6 F/I	33-2395	HP-2011
		33-2395 ♦	HP-2011
Focus	2.0L L4 F/I		HP-1002
Focus	2.0L L4 F/I - US	33-2401 ♦	HP-1002
Focus III	1.6L L4 DSL	E-2993 ♦	
Focus III	1.6L L4 F/I	E-2993 ♦	
Focus III	2.0L L4 DSL	E-2993 ♦	
Fusion	1.4L L4 F/I	33-2853	
Fusion	1.6L L4 F/I	33-2853	
Fusion	2.5L L4 F/I	33-2357 ♦	HP-1002
Fusion	3.0L V6 F/I	33-2340	HP-2011
Fusion	3.5L V6 F/I	33-2395	HP-2011
Galaxy II	1.6L L4 DSL	33-2393	
Galaxy II	1.6L L4 F/I	33-2393	
Galaxy II	2.0L L4 DSL	33-2393	
Galaxy II	2.0L L4 F/I	33-2393	
Ka	1.3L L4 DSL	33-2932	
Mondeo IV	1.6L L4 DSL	33-2393	
Mondeo IV	1.6L L4 F/I	33-2393	
Mondeo IV	2.0L L4 DSL	33-2393	
Mondeo IV	2.0L L4 F/I	33-2393	
Mustang	3.7L V6 F/I	33-2431 ♦	HP-2011
Mustang GT	5.0L V8 F/I	33-2431 ♦	HP-2011
Mustang Shelby GT500	5.4L V8 F/I	E-1993 ♦	HP-2010
Ranger	2.3L L4 F/I	33-2106-1	HP-1002
Ranger	4.0L V6 F/I	33-2106-1 ♦	HP-2010
S-Max	2.0L L4 DSL	33-2393	
S-Max	2.0L L4 F/I	33-2393	
Taurus	3.5L V6 F/I	33-2395 ♦	HP-2011
Taurus SHO	3.5L V6 F/I	33-2395 ♦	HP-2011
Transit Connect	2.0L L4 F/I	33-2436	HP-1002

*Indicates 2 filters required ♦ - Intake kit available - see page 80 Applications updated daily at knfilters.com

Partial Listing - Complete List of Vehicles and Applications at knfilters.com

Vehicle	Engine Type	Air Filter	Oil Filter
2010 FORD			
Crown Victoria	4.6L V8 F/I	33-2272	
		33-2272 ♦	
Crown Victoria	4.6L V8 F/I - exc. Police Package	33-2272	HP-2010
Crown Victoria	4.6L V8 F/I - Police Package	33-2272	HP-1002
E150	4.6L V8 F/I	E-0945	HP-2010
E150	5.4L V8 F/I	E-0945	HP-2010
E250	4.6L V8 F/I	E-0945	HP-2010
E250	5.4L V8 F/I	E-0945	HP-2010
E350 Super Duty	5.4L V8 F/I	E-0945 ♦	HP-2010
E350 Super Duty	6.0L V8 DSL	33-2341	
E350 Super Duty	6.8L V10 F/I	E-0945 ♦	HP-2010
E450 Super Duty	5.4L V8 F/I		HP-2010
E450 Super Duty	6.8L V10 F/I	E-0945 ♦	HP-2010
Ecosport	2.0L L4 F/I		HP-1002
Edge	3.5L V6 F/I	33-2395 ♦	HP-2011
Escape	2.5L L4 F/I	33-2187	HP-1002
Escape	3.0L V6 F/I	E-1990	HP-2011
Escape Hybrid	2.5L L4 F/I	33-2347	HP-1002
Expedition	5.4L V8 F/I	33-2385 ♦	HP-2010
Explorer	4.0L V6 F/I	33-2366	HP-2010
Explorer	4.6L V8 F/I	33-2353	HP-2010
Explorer Sport Trac	4.0L V6 F/I	33-2366	HP-2010
Explorer Sport Trac	4.6L V8 F/I	33-2353	HP-2010
F150	4.6L V8 F/I	33-2385	HP-2010
		33-2385 ♦	HP-2010
F150	5.4L V8 F/I	33-2385 ♦	HP-2010
F250 Super Duty	5.4L V8 F/I	33-2385 ♦	HP-2010
F250 Super Duty	6.8L V10 F/I	33-2385	HP-2010
F350 Super Duty	5.4L V8 F/I	33-2385 ♦	HP-2010
F350 Super Duty	6.8L V10 F/I	33-2385	HP-2010
F450 Super Duty	6.8L V10 F/I	33-2385	HP-2010
F550 Super Duty	6.8L V10 F/I	33-2385	HP-2010
F150 SVT Raptor	5.4L V8 F/I	33-2385 ♦	HP-2010
F150 SVT Raptor	6.2L V8 F/I	33-2385 ♦	HP-2010
Fiesta VI	1.25L L4 F/I	33-2955 ♦	
Fiesta VI	1.4L L4 DSL	33-2840	
Fiesta VI	1.4L L4 F/I	33-2955 ♦	
Fiesta VI	1.6L L4 DSL	33-2955	
Fiesta VI	1.6L L4 F/I	33-2955 ♦	
Flex	3.5L V6 F/I	33-2395	HP-2011
		33-2395 ♦	HP-2011
Focus	2.0L L4 F/I		HP-1002
Focus	2.0L L4 F/I - US	33-2401 ♦	HP-1002
Focus II	1.4L L4 F/I	E-2993 ♦	
Focus II	1.6L L4 DSL	E-2993 ♦	
Focus II	1.6L L4 F/I	E-2993 ♦	
Focus II	1.8L L4 F/I	E-2993 ♦	
Focus II	2.0L L4 F/I	E-2993 ♦	
Focus II	2.5L L5 F/I - RS	E-2993 ♦	
Focus III	1.6L L4 DSL	E-2993 ♦	
Focus III	1.6L L4 F/I	E-2993 ♦	
Focus III	2.0L L4 DSL	E-2993 ♦	
Fusion	1.4L L4 F/I	33-2853	
Fusion	1.6L L4 F/I	33-2853	
Fusion	2.5L L4 F/I	33-2357 ♦	HP-1002
Fusion	3.0L V6 F/I	33-2340	HP-2011
Fusion	3.5L V6 F/I	33-2395	HP-2011
Fusion Hybrid	2.5L L4 F/I		HP-1002
Ka	1.3L L4 DSL	33-2932	
Mondeo IV	2.0L L4 DSL	33-2393	
Mondeo IV	2.0L L4 F/I	33-2393 ♦	
Mondeo IV	2.3L L4 F/I	33-2393	
Mustang	4.0L V6 F/I	33-2298 ♦	HP-2010

Vehicle	Engine Type	Air Filter	Oil Filter
2010 FORD			
Mustang GT	4.6L V8 F/I	33-2431 ♦	HP-2010
Mustang Shelby GT500	5.4L V8 F/I	E-1993 ♦	HP-2010
Ranger	2.3L L4 F/I	33-2106-1	HP-1002
Ranger	4.0L V6 F/I	33-2106-1 ♦	HP-2010
S-Max	1.6L L4 F/I	33-2393	
S-Max	2.0L L4 DSL	33-2393	
S-Max	2.0L L4 F/I	33-2393 ♦	
Taurus	3.5L V6 F/I	33-2395 ♦	HP-2011
Taurus SHO	3.5L V6 F/I	33-2395	HP-2011
Transit Connect	2.0L L4 F/I	33-2436	HP-1002
2009 FORD			
Crown Victoria	4.6L V8 F/I	33-2272	
		33-2272 ♦	
Crown Victoria	4.6L V8 F/I - Exc. Police Package after 11/13/08	33-2272	HP-2010
Crown Victoria	4.6L V8 F/I - Police Package. after 11/13/08	33-2272	HP-1002
E150	4.6L V8 F/I	E-0945	HP-2010
E150	5.4L V8 F/I	E-0945	HP-2010
E250	4.6L V8 F/I	E-0945	HP-2010
E250	5.4L V8 F/I	E-0945	HP-2010
E350 Super Duty	5.4L V8 F/I	E-0945 ♦	HP-2010
E350 Super Duty	6.0L V8 DSL	33-2341	
E350 Super Duty	6.8L V10 F/I	E-0945 ♦	HP-2010
E450 Super Duty	6.0L V8 DSL	33-2341	
E450 Super Duty	6.8L V10 F/I	E-0945 ♦	HP-2010
Edge	3.5L V6 F/I	33-2395 ♦	
Edge	3.5L V6 F/I - Built After 1-15-09	33-2395	HP-2011
Edge	3.5L V6 F/I - Built Before 1-15-09	33-2395	HP-2009
Escape	2.5L L4 F/I	33-2187	
Escape	2.5L L4 F/I - Cartridge	33-2187	HP-7013
Escape	2.5L L4 F/I - Spin On	33-2187	HP-1002
Escape	3.0L V6 F/I	E-1990	HP-2011
Escape Hybrid	2.5L L4 F/I	33-2347	
Escape Hybrid	2.5L L4 F/I - Cartridge	33-2347	HP-7013
Escape Hybrid	2.5L L4 F/I - Spin On	33-2347	HP-1002
Expedition	5.4L V8 F/I	33-2385 ♦	HP-2010
Explorer	4.0L V6 F/I	33-2366	HP-2010
Explorer	4.6L V8 F/I	33-2353	HP-2010
Explorer Sport Trac	4.0L V6 F/I	33-2366	HP-2010
Explorer Sport Trac	4.6L V8 F/I	33-2353	HP-2010
F150	4.6L V8 F/I	33-2385	
		33-2385 ♦	
F150	4.6L V8 F/I - 22mm Thread	33-2385	HP-2010
F150	4.6L V8 F/I - 3/4 thread	33-2385	HP-2009
F150	5.4L V8 F/I	33-2385 ♦	HP-2010
F250 Super Duty	5.4L V8 F/I	33-2385 ♦	HP-2010
F250 Super Duty	6.4L V8 DSL	E-0785 ♦	
F250 Super Duty	6.8L V10 F/I	33-2385	HP-2010
F350	5.4L V8 F/I	33-2385	HP-2010
F350 Super Duty	5.4L V8 F/I	33-2385 ♦	HP-2010
F350 Super Duty	6.4L V8 DSL	E-0785 ♦	
F350 Super Duty	6.8L V10 F/I	33-2385	HP-2010
F450	6.8L V10 F/I	33-2385	
F450 Super Duty	6.4L V8 DSL	E-0785 ♦	
F450 Super Duty	6.8L V10 F/I	33-2385	
F550 Super Duty	6.4L V8 DSL	E-0785 ♦	
F550 Super Duty	6.8L V10 F/I	33-2385	HP-2010
Fiesta VI	1.4L L4 DSL	33-2840	
Fiesta VI	1.6L L4 DSL	33-2955	
Fiesta VI	1.6L L4 F/I	33-2955 ♦	

*Indicates 2 filters required ♦ - Intake kit available - see page 80 Applications updated daily at knfilters.com

AIR & OIL FILTERS

Vehicle	Engine Type	Air Filter	Oil Filter
2009 FORD			
Flex	3.5L V6 F/I	33-2395 ♦	
Flex	3.5L V6 F/I - Built After 1-15-09	33-2395	HP-2011
Flex	3.5L V6 F/I - Built Before 1-15-09	33-2395	HP-2009
Focus	2.0L L4 F/I		HP-1002
Focus	2.0L L4 F/I - US	33-2401 ♦	HP-1002
Focus II	1.4L L4 F/I	E-2993 ♦	
Focus II	1.6L L4 DSL	E-2993 ♦	
Focus II	1.6L L4 F/I	E-2993 ♦	
Focus II	1.8L L4 F/I	E-2993 ♦	
Focus II	2.0L L4 DSL	E-2993 ♦	
Focus II	2.0L L4 F/I	E-2993 ♦	
Focus II	2.5L L5 F/I - RS	E-2993 ♦	
Focus II	2.5L L5 F/I - ST	33-2873 ♦	
Fusion	1.4L L4 F/I	33-2853	
Fusion	1.6L L4 F/I	33-2853	
Fusion	2.3L L4 F/I	33-2357 ♦	HP-7013
Fusion	3.0L V6 F/I	33-2340 ♦	HP-2010
Mondeo IV	1.6L L4 F/I	33-2393 ♦	
Mondeo IV	2.0L L4 DSL	33-2393	
Mondeo IV	2.0L L4 F/I	33-2393 ♦	
Mondeo IV	2.3L L4 F/I	33-2393 ♦	
Mustang	4.0L V6 F/I	33-2298 ♦	HP-2010
Mustang Bullitt	4.6L V8 F/I	E-1997	HP-2010
Mustang GT	4.6L V8 F/I	33-2298 ♦	HP-2010
Mustang Shelby	5.4L V8 F/I	33-2365 ♦	HP-2010
Ranger	2.3L L4 F/I	33-2106-1	HP-1002
Ranger	4.0L V6 F/I	33-2106-1 ♦	HP-2010
S-Max	2.3L L4 F/I	33-2393 ♦	
Taurus	3.5L V6 F/I	33-2395	
Taurus	3.5L V6 F/I - Built After 1-15-09	33-2395	HP-2011
Taurus	3.5L V6 F/I - Built Before 1-15-09	33-2395	HP-2009
Taurus X	3.5L V6 F/I	33-2395	HP-2009
2008 FORD			
Crown Victoria	4.6L V8 F/I	33-2272 ♦	HP-2010
E150	4.6L V8 F/I	E-0945	HP-2010
E150	5.4L V8 F/I	E-0945	HP-2010
E250	4.6L V8 F/I	E-0945	HP-2010
E250	5.4L V8 F/I	E-0945	HP-2010
E350 Super Duty	5.4L V8 F/I	E-0945 ♦	HP-2010
E350 Super Duty	6.8L V10 F/I	E-0945 ♦	HP-2010
E450 Super Duty	5.4L V8 F/I		HP-2010
E450 Super Duty	6.8L V10 F/I	E-0945 ♦	HP-2010
Edge	3.5L V6 F/I	33-2395 ♦	HP-2009
Escape	2.3L L4 F/I	33-2187	
Escape	2.3L L4 F/I - Cartridge	33-2187	HP-7013
Escape	2.3L L4 F/I - Spin On	33-2187	HP-1002
Escape	3.0L V6 F/I	33-2187	HP-2010
Escape Hybrid	2.3L L4 F/I	33-2347	HP-7013
Expedition	5.4L V8 F/I	33-2385 ♦	HP-2010
Explorer	4.0L V6 F/I	33-2366	HP-2010
Explorer	4.6L V8 F/I	33-2353 ♦	HP-2010
Explorer Sport Trac	4.0L V6 F/I	33-2366	HP-2010
Explorer Sport Trac	4.6L V8 F/I	33-2353	HP-2010
F150	4.2L V6 F/I	E-0945 ♦	HP-2009
F150	4.6L V8 F/I	E-0945 ♦	
F150	4.6L V8 F/I - 22mm Thread	E-0945	HP-2010
F150	4.6L V8 F/I - 3/4 thread	E-0945	HP-2009
F150	5.4L V8 F/I	33-2287 ♦	HP-2010
F250 Super Duty	5.4L V8 F/I	33-2385 ♦	HP-2010
F250 Super Duty	6.8L V10 F/I	33-2385	HP-2010

Vehicle	Engine Type	Air Filter	Oil Filter
2008 FORD			
F350	5.4L V8 F/I	33-2385	HP-2010
F350 Super Duty	5.4L V8 F/I	33-2385 ♦	HP-2010
F350 Super Duty	6.8L V10 F/I	33-2385	HP-2010
F450	6.8L V10 F/I	33-2385	HP-2010
F450 Super Duty	6.8L V10 F/I	33-2385	HP-2010
F550 Super Duty	6.8L V10 F/I	33-2385	HP-2010
Falcon	4.0L L6 F/I - Turbo	33-2950	
Fiesta	1.6L L4 F/I		HP-2009
Fiesta Ikon	1.6L L4 F/I		HP-2009
Fiesta V	1.6L L4 DSL	33-2883	
Fiesta V	1.6L L4 F/I	33-2853	
Fiesta V	2.0L L4 F/I	33-2880 ♦	
Fiesta VI	1.25L L4 F/I	33-2955 ♦	
Fiesta VI	1.4L L4 DSL	33-2840 ♦	
Fiesta VI	1.4L L4 F/I	33-2955 ♦	
Fiesta VI	1.6L L4 DSL	33-2955	
Fiesta VI	1.6L L4 F/I	33-2955 ♦	
Focus	2.0L L4 F/I		HP-1002
Focus	2.0L L4 F/I - US, exc. PZEV	33-2401 ♦	HP-1002
Focus	2.3L L4 F/I		HP-1002
Focus II	1.4L L4 F/I	E-2993 ♦	
Focus II	1.6L L4 DSL	E-2993 ♦	
Focus II	1.6L L4 F/I	E-2993 ♦	
Focus II	1.8L L4 DSL	E-2993 ♦	
Focus II	1.8L L4 F/I	E-2993 ♦	
Focus II	2.0L L4 DSL	E-2993 ♦	
Focus II	2.0L L4 F/I	E-2993 ♦	
Focus II	2.5L L5 F/I	33-2873 ♦	
Fusion	1.4L L4 F/I	33-2853	
Fusion	1.6L L4 F/I	33-2853	
Fusion	2.3L L4 F/I	33-2357 ♦	HP-7013
Fusion	3.0L V6 F/I	33-2340 ♦	HP-2010
Mondeo IV	1.8L L4 DSL	33-2393	
Mondeo IV	1.8L L4 F/I	33-2393 ♦	
Mondeo IV	2.0L L4 DSL	33-2393	
Mondeo IV	2.0L L4 F/I	33-2393 ♦	
Mustang	4.0L V6 F/I	33-2298 ♦	HP-2010
Mustang Bullitt	4.6L V8 F/I	E-1997	HP-2010
Mustang GT	4.6L V8 F/I	33-2298 ♦	HP-2010
Mustang Shelby	5.4L V8 F/I	33-2365 ♦	HP-2010
Ranger	2.3L L4 F/I	33-2106-1	HP-1002
Ranger	2.5L L4 DSL	E-2296	
Ranger	3.0L L6 DSL	E-2296	
Ranger	3.0L V6 F/I	33-2106-1 ♦	HP-2009
Ranger	4.0L V6 F/I	33-2106-1 ♦	HP-2010
S-Max	2.3L L4 F/I	33-2393 ♦	
Taurus	3.5L V6 F/I	33-2395	HP-2009
Taurus X	3.5L V6 F/I	33-2395	HP-2009
Transit	2.4L L4 DSL	33-2861	
2007 FORD			
Crown Victoria	4.6L V8 F/I	33-2272 ♦	HP-2010
E150	4.6L V8 F/I	E-0945	HP-2010
E150	5.4L V8 F/I	E-0945	HP-2010
E250	4.6L V8 F/I	E-0945	HP-2010
E250	5.4L V8 F/I	E-0945	HP-2010
E350 Super Duty	5.4L V8 F/I	E-0945 ♦	HP-2010
E350 Super Duty	6.8L V10 F/I	E-0945 ♦	HP-2010
E450 Cutaway	6.8L V10 F/I - Class C	E-0945 ♦	
E450 Super Duty	6.8L V10 F/I	E-0945 ♦	HP-2010
Edge	3.5L V6 F/I	33-2395 ♦	HP-2009
Escape	2.3L L4 F/I	33-2187	
Escape	2.3L L4 F/I - Cartridge	33-2187	HP-7013
Escape	2.3L L4 F/I - Spin On	33-2187	HP-1002

*Indicates 2 filters required ♦ - Intake kit available - see page 80 Applications updated daily at knfilters.com

Partial Listing - Complete List of Vehicles and Applications at knfilters.com

Vehicle	Engine Type	Air Filter	Oil Filter
2007 FORD			
Escape	3.0L V6 F/I	33-2187	HP-2010
Escape Hybrid	2.3L L4 F/I	33-2347	HP-7013
Expedition	5.4L V8 F/I	33-2385 ♦	HP-2010
Explorer	4.0L V6 F/I	33-2366	HP-2010
Explorer	4.6L V8 F/I	33-2353 ♦	HP-2010
Explorer Sport Trac	4.0L V6 F/I	33-2366	HP-2010
Explorer Sport Trac	4.6L V8 F/I	33-2353	HP-2010
F150	4.2L V6 F/I	E-0945 ♦	HP-2009
F150	4.6L V8 F/I	E-0945 ♦	
F150	4.6L V8 F/I - 22mm Thread	E-0945	HP-2010
F150	4.6L V8 F/I - 3/4 thread	E-0945	HP-2009
F150	5.4L V8 F/I	33-2287 ♦	HP-2010
F250 Custom Chassis	6.8L V10 F/I - Class A	33-2313	
F250 Super Duty	5.4L V8 F/I	33-2287 ♦	HP-2010
F250 Super Duty	6.8L V10 F/I	33-2313	HP-2010
F350	5.4L V8 F/I	33-2287	HP-2010
F350 Cutaway	5.4L V8 F/I - Class C	33-2287	
F350 Cutaway	6.0L V8 DSL - Class C	E-0772 ♦	
F350 Cutaway	6.8L V10 F/I - Class C	33-2313	
F350 Super Duty	5.4L V8 F/I	33-2287 ♦	HP-2010
F350 Super Duty	6.8L V10 F/I	33-2313	HP-2010
F450	6.8L V10 F/I	33-2313	HP-2010
F450 Cutaway	6.0L V8 DSL - Class C	E-0772	
F450 Cutaway	6.8L V10 F/I - Class C	33-2313	
F450 Super Duty	6.8L V10 F/I	33-2313	HP-2010
F550 Cutaway	6.8L V10 F/I - Class C	33-2313	
F550 Super Duty	6.8L V10 F/I	33-2313	HP-2010
Fairmont	5.4L V8 F/I	33-2852	HP-2010
Falcon	4.0L V6 F/I	33-2852	
Falcon	4.0L V6 F/I - DOHC	33-2852	HP-3001
Falcon	4.0L V6 F/I - SOHC	33-2852	HP-2010
Falcon	5.4L V8 F/I	33-2852	HP-2010
Fiesta	1.25L L4 F/I	33-2853	
Fiesta	1.6L L4 F/I		HP-2009
Fiesta Ikon	1.6L L4 F/I		HP-2009
Fiesta V	1.4L L4 DSL	33-2840 ♦	
Fiesta V	1.4L L4 F/I	33-2853 ♦	
Fiesta V	1.6L L4 DSL	33-2883	
Fiesta V	1.6L L4 F/I	33-2853 ♦	
Fiesta V	2.0L L4 F/I	33-2880 ♦	
Five Hundred	3.0L V6 F/I	33-2308	HP-2010
Focus	2.0L L4 F/I		HP-1002
Focus	2.3L L4 F/I		HP-1002
Focus C-Max	1.6L L4 DSL - to 5/07	33-2874	
Focus C-Max	1.6L L4 F/I - to 5/07	33-2877	
Focus C-Max	1.8L L4 DSL - to 5/07	33-2886	
Focus C-Max	1.8L L4 F/I - to 5/07	33-2877	
Focus C-Max	2.0L L4 DSL	33-2886	
Focus C-Max	2.0L L4 F/I	33-2877 ♦	
Focus II	1.4L L4 F/I - from 8/07	E-2993 ♦	
Focus II	1.4L L4 F/I - to 7/07	33-2877 ♦	
Focus II	1.6L L4 DSL - from 8/07	E-2993 ♦	
Focus II	1.6L L4 DSL - to 7/07	33-2874 ♦	
Focus II	1.6L L4 F/I - from 8/07	E-2993 ♦	
Focus II	1.6L L4 F/I - to 7/07	33-2877 ♦	
Focus II	1.8L L4 DSL - from 8/07	E-2993 ♦	
Focus II	1.8L L4 DSL - to 7/07	33-2886 ♦	
Focus II	1.8L L4 F/I - from 8/07	E-2993 ♦	
Focus II	1.8L L4 F/I - to 7/07	33-2877 ♦	
Focus II	2.0L L4 DSL - from 8/07	E-2993 ♦	
Focus II	2.0L L4 DSL - to 7/07	33-2886 ♦	
2007 FORD			
Focus II	2.0L L4 F/I - from 8/07	E-2993 ♦	
Focus II	2.0L L4 F/I - to 7/07	33-2877 ♦	
Focus II	2.5L L5 F/I	33-2873 ♦	
Freestar	3.9L V6 F/I	33-2321	HP-2009
Freestar	4.2L V6 F/I	33-2321	HP-2009
Freestyle	3.0L V6 F/I	33-2308	HP-2010
Fusion	1.25L L4 F/I	33-2853	
Fusion	1.4L L4 DSL	33-2840	
Fusion	1.4L L4 F/I	33-2853	
Fusion	1.6L L4 DSL	33-2883	
Fusion	1.6L L4 F/I	33-2853	
Fusion	2.3L L4 F/I	33-2357 ♦	HP-7013
Fusion	3.0L V6 F/I	33-2340 ♦	HP-2010
Ka	1.6L L4 F/I	33-2862 ♦	HP-2009
Mondeo III	2.0L L4 DSL	33-2393 ♦	
Mondeo III	2.2L L4 DSL	33-2210 ♦	
Mondeo III	3.0L V6 F/I	33-2210 ♦	
Mondeo IV	1.6L L4 F/I	33-2393 ♦	
Mondeo IV	1.8L L4 DSL	33-2393	
Mondeo IV	1.8L L4 F/I	33-2393 ♦	
Mondeo IV	2.0L L4 F/I	33-2393 ♦	
Mondeo IV	2.3L L4 F/I	33-2393 ♦	
Mustang	4.0L V6 F/I	33-2298 ♦	HP-2010
Mustang GT	4.6L V8 F/I	33-2298 ♦	HP-2010
Mustang Shelby	5.4L V8 F/I	33-2365 ♦	HP-2010
Ranger	2.3L L4 F/I	33-2106-1	HP-1002
Ranger	2.5L L4 DSL	E-2296	
Ranger	3.0L L6 DSL	E-2296	
Ranger	3.0L V6 F/I	33-2106-1 ♦	HP-2009
Ranger	4.0L V6 F/I	33-2106-1 ♦	HP-2010
S-Max	2.3L L4 F/I	33-2393 ♦	
Taurus	3.0L V6 F/I	33-2150	HP-2009
2006 FORD			
Crown Victoria	4.6L V8 F/I	33-2272 ♦	HP-2010
E150	4.6L V8 F/I	E-0945	HP-2010
E150	5.4L V8 F/I	E-0945	HP-2010
E250	4.6L V8 F/I	E-0945	HP-2010
E250	5.4L V8 F/I	E-0945	HP-2010
E350 Cutaway	5.4L V8 F/I - Class C	E-0945 ♦	
E350 Super Duty	5.4L V8 F/I	E-0945 ♦	HP-2010
E350 Super Duty	6.8L V10 F/I	E-0945 ♦	HP-2010
E450 Cutaway	6.8L V10 F/I - Class C	E-0945 ♦	
E450 Super Duty	6.8L V10 F/I	E-0945 ♦	HP-2010
Ecosport	2.0L L4 F/I		HP-1012
Escape	2.3L L4 F/I	33-2187	
Escape	2.3L L4 F/I - Cartridge	33-2187	HP-7013
Escape	2.3L L4 F/I - Spin On	33-2187	HP-1002
Escape	3.0L V6 F/I	33-2187	HP-2010
Escape Hybrid	2.3L L4 F/I	33-2347	HP-7013
Expedition	5.4L V8 F/I	33-2287 ♦	HP-2010
Explorer	4.0L V6 F/I	33-2366	HP-2010
Explorer	4.6L V8 F/I	33-2353 ♦	HP-2010
Explorer Sport Trac	4.0L V6 F/I	33-2366	HP-2010
F150	4.2L V6 F/I	E-0945 ♦	HP-2009
F150	4.6L V8 F/I	E-0945 ♦	
F150	4.6L V8 F/I - 22mm Thread	E-0945	HP-2010
F150	4.6L V8 F/I - 3/4 thread	E-0945	HP-2009
F150	5.4L V8 F/I	33-2287 ♦	HP-2010
F250 Custom Chassis	6.8L V10 F/I - Class A	33-2313	
F250 Super Duty	5.4L V8 F/I	33-2287 ♦	HP-2010
F250 Super Duty	6.8L V10 F/I	33-2313 ♦	HP-2010
F350	5.4L V8 F/I	33-2287 ♦	HP-2010
F350 Cutaway	5.4L V8 F/I - Class C	33-2287	

AIR & OIL FILTERS

Vehicle	Engine Type	Air Filter	Oil Filter
2006 FORD			
F350 Cutaway	6.0L V8 DSL - Class C	E-0772 ♦	
F350 Cutaway	6.8L V10 F/I - Class C	33-2313	
F350 Super Duty	5.4L V8 F/I	33-2287 ♦	HP-2010
F350 Super Duty	6.8L V10 F/I	33-2313 ♦	HP-2010
F450	6.8L V10 F/I		HP-2010
F450 Cutaway	6.0L V8 DSL - Class C	E-0772	
F450 Cutaway	6.8L V10 F/I - Class C	33-2313	
F450 Super Duty	6.8L V10 F/I		HP-2010
F550 Cutaway	6.8L V10 F/I - Class C	33-2313	
F550 Super Duty	6.8L V10 F/I		HP-2010
Falcon	4.0L V6 F/I	33-2852	
Falcon	5.4L V8 F/I	33-2852	HP-2010
Fiesta	1.6L L4 F/I		HP-2009
Fiesta Ikon	1.6L L4 F/I		HP-2009
Fiesta V	1.3L L4 F/I	33-2853	
Fiesta V	1.4L L4 DSL	33-2840 ♦	
Fiesta V	1.6L L4 DSL	33-2883	
Fiesta V	1.6L L4 F/I	33-2853 ♦	
Fiesta V	2.0L L4 F/I	33-2880 ♦	
Five Hundred	3.0L V6 F/I	33-2308	HP-2010
Focus	2.0L L4 F/I		HP-1002
Focus	2.3L L4 F/I		HP-1002
Focus C-Max	1.6L L4 DSL	33-2874	
Focus C-Max	1.6L L4 F/I	33-2877	
Focus C-Max	1.8L L4 DSL	33-2886	
Focus C-Max	1.8L L4 F/I	33-2877 ♦	
Focus C-Max	2.0L L4 DSL	33-2886	
Focus C-Max	2.0L L4 F/I	33-2877 ♦	
Focus II	1.4L L4 F/I	33-2877 ♦	
Focus II	1.6L L4 DSL	33-2874 ♦	
Focus II	1.6L L4 F/I	33-2877 ♦	
Focus II	1.8L L4 DSL	33-2886	
Focus II	1.8L L4 F/I	33-2877 ♦	
Focus II	2.0L L4 DSL	33-2886 ♦	
Focus II	2.0L L4 F/I	33-2877 ♦	
Focus II	2.5L L5 F/I	33-2873 ♦	
Freestar	3.9L V6 F/I	33-2321	HP-2009
Freestar	4.2L V6 F/I	33-2321	HP-2009
Freestyle	3.0L V6 F/I	33-2308	HP-2010
Fusion	1.4L L4 DSL	33-2840	
Fusion	1.4L L4 F/I	33-2853	
Fusion	1.6L L4 DSL	33-2883	
Fusion	1.6L L4 F/I	33-2853	
Fusion	2.3L L4 F/I	33-2357 ♦	HP-7013
Fusion	3.0L V6 F/I	33-2340 ♦	HP-2010
Ka	1.6L L4 F/I	33-2862 ♦	HP-2009
Mondeo III	2.2L L4 DSL	33-2210 ♦	
Mustang	4.0L V6 F/I	33-2298 ♦	HP-2010
Mustang GT	4.6L V8 F/I	33-2298 ♦	HP-2010
Ranger	2.3L L4 F/I	33-2106-1	HP-1002
Ranger	2.5L L4 DSL - from 7/06	E-2296	
Ranger	2.5L L4 DSL - to 6/06	33-2167	
Ranger	3.0L L6 DSL	E-2296	
Ranger	3.0L V6 F/I	33-2106-1 ♦	HP-2009
Ranger	4.0L V6 F/I	33-2106-1 ♦	HP-2010
S-Max	1.8L L4 DSL	33-2393	
Taurus	3.0L V6 F/I	33-2150	HP-2009
2005 FORD			
Crown Victoria	4.6L V8 F/I	33-2272 ♦	HP-2010
E150	4.6L V8 F/I	E-0945	HP-2010
E150	5.4L V8 F/I	E-0945	HP-2010
E150 Club Wagon	4.6L V8 F/I	E-0945	HP-2010
E150 Club Wagon	5.4L V8 F/I	E-0945	HP-2010

Vehicle	Engine Type	Air Filter	Oil Filter
2005 FORD			
E250	4.6L V8 F/I	E-0945	HP-2010
E250	5.4L V8 F/I	E-0945	HP-2010
E250 Super Duty	5.4L V8 F/I	E-0945	HP-2010
E350 Club Wagon	5.4L V8 F/I	E-0945 ♦	HP-2010
E350 Club Wagon	6.8L V10 F/I	E-0945 ♦	HP-2010
E350 Super Duty	5.4L V8 F/I	E-0945 ♦	HP-2010
E350 Super Duty	6.8L V10 F/I	E-0945 ♦	HP-2010
E450 Super Duty	6.8L V10 F/I	E-0945 ♦	HP-2010
Ecosport	2.0L L4 F/I		HP-1012
Escape	2.3L L4 F/I	33-2187	
Escape	2.3L L4 F/I - Spin On	33-2187	HP-1002
Escape	3.0L V6 F/I	33-2187	HP-2010
Escape Hybrid	2.3L L4 F/I	33-2347	HP-7013
Excursion	5.4L V8 F/I		HP-2010
Excursion	5.4L V8 F/I - w/Panel Filter	33-2287 ♦	HP-2010
Excursion	5.4L V8 F/I - w/Round Filter	E-0945 ♦	HP-2010
Excursion	6.8L V10 F/I	E-0945 ♦	HP-2010
Expedition	5.4L V8 F/I	33-2287 ♦	HP-2010
Explorer	4.0L V6 F/I	33-2207	HP-2010
Explorer	4.6L V8 F/I	33-2207 ♦	HP-2010
Explorer Sport Trac	4.0L V6 F/I	33-2106-1	HP-2010
F150	4.2L V6 F/I	E-0945 ♦	HP-2009
F150	4.6L V8 F/I	E-0945 ♦	
F150	4.6L V8 F/I - 22mm Thread	E-0945	HP-2010
F150	4.6L V8 F/I - 3/4 thread	E-0945	HP-2009
F150	5.4L V8 F/I	33-2287 ♦	HP-2010
F250 Harley Davidson Super Duty	6.8L V10 F/I		HP-2010
F250 Super Duty	5.4L V8 F/I	33-2287 ♦	HP-2010
F250 Super Duty	6.8L V10 F/I	33-2313 ♦	HP-2010
F350	5.4L V8 F/I	33-2287 ♦	HP-2010
F350 Harley Davidson Super Duty	6.8L V10 F/I		HP-2010
F350 Super Duty	5.4L V8 F/I	33-2287 ♦	HP-2010
F350 Super Duty	6.8L V10 F/I	33-2313 ♦	HP-2010
F450	6.8L V10 F/I		HP-2010
F450 Super Duty	6.8L V10 F/I		HP-2010
F550 Super Duty	6.8L V10 F/I		HP-2010
Falcon	4.0L V6 F/I	33-2852	
Falcon	5.4L V8 F/I - SOHC	33-2852	
Fiesta	1.6L L4 F/I		HP-2009
Fiesta Ikon	1.6L L4 F/I		HP-2009
Fiesta V	1.4L L4 DSL	33-2840 ♦	
Fiesta V	1.4L L4 F/I	33-2853 ♦	
Fiesta V	1.6L L4 F/I	33-2853 ♦	HP-1012
Fiesta V	2.0L L4 F/I	33-2880 ♦	
Five Hundred	3.0L V6 F/I	33-2308	HP-2010
Focus	2.0L L4 F/I		HP-1002
Focus	2.3L L4 F/I		HP-1002
Focus C-Max	1.6L L4 DSL	33-2874	
Focus C-Max	1.6L L4 F/I	33-2877	
Focus C-Max	1.8L L4 DSL	33-2886	
Focus C-Max	1.8L L4 F/I	33-2877 ♦	
Focus C-Max	2.0L L4 DSL	33-2886	
Focus C-Max	2.0L L4 F/I	33-2877 ♦	
Focus II	1.4L L4 F/I	33-2877 ♦	
Focus II	1.6L L4 DSL	33-2874 ♦	
Focus II	1.6L L4 F/I	33-2877 ♦	
Focus II	1.8L L4 DSL	33-2886	
Focus II	1.8L L4 F/I	33-2877 ♦	
Focus II	2.0L L4 DSL	33-2886 ♦	
Focus II	2.0L L4 F/I	33-2877 ♦	

*Indicates 2 filters required ♦ - Intake kit available - see page 80 Applications updated daily at knfilters.com

Partial Listing - Complete List of Vehicles and Applications at knfilters.com

Vehicle	Engine Type	Air Filter	Oil Filter
2005 FORD			
Focus II	2.5L L5 F/I	33-2873 ♦	
Freestar	3.9L V6 F/I	33-2321	HP-2009
Freestar	4.2L V6 F/I	33-2321	HP-2009
Freestyle	3.0L V6 F/I	33-2308	HP-2010
Maverick	3.0L L4 F/I	33-2187	
Mondeo III	2.5L V6 F/I	33-2210 ♦	HP-2010
Mustang	4.0L V6 F/I	33-2298 ♦	HP-2010
Mustang GT	4.6L V8 F/I	33-2298 ♦	HP-2010
Ranger	2.3L L4 F/I	33-2106-1	HP-2009
Ranger	2.5L L4 DSL	33-2167	
Ranger	3.0L V6 F/I	33-2106-1 ♦	HP-2009
Ranger	4.0L V6 F/I	33-2106-1 ♦	HP-2010
Street KA	1.6L L4 F/I	33-2862 ♦	
Taurus	3.0L V6 F/I	33-2150	
Taurus	3.0L V6 F/I - DOHC	33-2150	HP-2010
Taurus	3.0L V6 F/I - OHV	33-2150	HP-2009
Thunderbird	3.9L V8 F/I	33-2266 ♦	HP-1014
2004 FORD			
Crown Victoria	4.6L V8 F/I	33-2272 ♦	HP-2010
E150	4.6L V8 F/I	E-0945	HP-2010
E150	5.4L V8 F/I	E-0945	HP-2010
E150 Club Wagon	4.6L V8 F/I	E-0945	HP-2010
E150 Club Wagon	5.4L V8 F/I	E-0945	HP-2010
E250	4.6L V8 F/I	E-0945	HP-2010
E250	5.4L V8 F/I	E-0945	HP-2010
E250 Super Duty	5.4L V8 F/I	E-0945	HP-2010
E350 Club Wagon	5.4L V8 F/I	E-0945 ♦	HP-2010
E350 Super Duty	5.4L V8 F/I	E-0945 ♦	HP-2010
E350 Super Duty	6.8L V10 F/I	E-0945 ♦	HP-2010
E450 Motorhome	6.8L V10 F/I - Class C	E-0945 ♦	
E450 Super Duty	6.8L V10 F/I	E-0945 ♦	HP-2010
E550 Motorhome	6.8L V10 F/I - Class C	E-0945 ♦	
Ecosport	2.0L L4 F/I		HP-1012
Escape	2.0L L4 F/I	33-2187	HP-1012
Escape	3.0L V6 F/I	33-2187	HP-2010
Excursion	5.4L V8 F/I	E-0945 ♦	HP-2010
Excursion	6.8L V10 F/I	E-0945 ♦	HP-2010
Expedition	4.6L V8 F/I	E-0945 ♦	HP-2010
Expedition	5.4L V8 F/I	E-0945 ♦	HP-2010
Explorer	4.0L V6 F/I	33-2207	HP-2010
Explorer	4.6L V8 F/I	33-2207 ♦	HP-2010
Explorer Sport	4.0L V6 F/I	33-2106-1	HP-2010
Explorer Sport Trac	4.0L V6 F/I	33-2106-1 ♦	HP-2010
F150	4.6L V8 F/I	E-0945 ♦	
F150	4.6L V8 F/I - 22mm Thread	E-0945	HP-2010
F150	4.6L V8 F/I - 3/4 thread	E-0945	HP-2009
F150	5.4L V8 F/I	33-2287 ♦	HP-2010
F150 Heritage	4.2L V6 F/I	E-0945 ♦	HP-2009
F150 Heritage	4.6L V8 F/I	E-0945 ♦	HP-2010
F150 Heritage	5.4L V8 F/I	E-0945	HP-2010
F150 Lightning	5.4L V8 F/I	33-2140-1 ♦	HP-2010
F250 Harley Davidson Super Duty	6.8L V10 F/I		HP-2010
F250 Super Duty	5.4L V8 F/I	E-0945 ♦	HP-2010
F250 Super Duty	6.8L V10 F/I	E-0945 ♦	HP-2010
F350	5.4L V8 F/I	E-0945 ♦	HP-2010
F350 Harley Davidson Super Duty	6.8L V10 F/I		HP-2010
F350 Super Duty	5.4L V8 F/I	E-0945 ♦	HP-2010
F350 Super Duty	6.8L V10 F/I	E-0945 ♦	HP-2010
F450	6.8L V10 F/I	E-0945	HP-2010
F450 Super Duty	6.8L V10 F/I	E-0945	HP-2010
F550 Super Duty	6.8L V10 F/I	E-0945	HP-2010

Vehicle	Engine Type	Air Filter	Oil Filter
2004 FORD			
Falcon	4.0L V6 F/I	33-2852	
Falcon	5.4L V8 F/I - DOHC	E-0945	
Falcon	5.4L V8 F/I - SOHC	33-2852	
Fiesta Ikon	1.6L L4 F/I		HP-2009
Focus	1.4L L4 F/I	33-2819 ♦	
Focus	1.6L L4 F/I	33-2819 ♦	
Focus	1.8L L4 DSL	33-2819 ♦	
Focus	1.8L L4 F/I	33-2819 ♦	
Focus	2.0L L4 F/I - DOHC		HP-1012
Focus	2.0L L4 F/I - Non-US	33-2819 ♦	
Focus	2.0L L4 F/I - SOHC		HP-2009
Focus	2.3L L4 F/I		HP-1002
Focus C-Max	1.6L L4 DSL	33-2874	
Focus C-Max	1.6L L4 F/I	33-2877	
Focus C-Max	1.8L L4 DSL	33-2886	
Focus C-Max	1.8L L4 F/I	33-2877 ♦	
Focus C-Max	2.0L L4 DSL	33-2886	
Focus C-Max	2.0L L4 F/I	33-2877 ♦	
Focus II	1.4L L4 F/I	33-2877 ♦	
Focus II	1.6L L4 DSL	33-2874 ♦	
Focus II	1.6L L4 F/I	33-2877 ♦	
Focus II	1.8L L4 F/I	33-2877 ♦	
Focus II	2.0L L4 DSL	33-2886 ♦	
Focus II	2.0L L4 F/I	33-2877 ♦	
Focus RS	2.0L L4 F/I	33-2266 ♦	
Focus ST170	2.0L L4 F/I	33-2819 ♦	
Focus SVT	2.0L L4 F/I	33-2819 ♦	HP-1012
Freestar	3.9L V6 F/I		HP-2009
Freestar	4.2L V6 F/I		HP-2009
Mondeo III	2.0L L4 DSL	33-2210 ♦	
Mondeo III	2.0L L4 F/I	33-2210 ♦	
Mondeo III	2.5L V6 F/I	33-2210 ♦	HP-2010
Mondeo III	3.0L V6 F/I	33-2210 ♦	
Motorhome	5.4L V8 F/I - Class C	E-0945	
Mustang	3.8L V6 F/I	E-0940 ♦	HP-2009
Mustang	3.9L V6 F/I	E-0940	HP-2009
Mustang GT	4.6L V8 F/I	E-0945 ♦	HP-2010
Mustang Mach 1	4.6L V8 F/I	E-0945 ♦	HP-2010
Mustang SVT Cobra	4.6L V8 F/I	E-0945 ♦	HP-2010
Ranger	2.3L L4 F/I	33-2106-1	HP-2009
Ranger	2.5L L4 DSL	33-2167	
Ranger	3.0L V6 F/I	33-2106-1 ♦	HP-2009
Ranger	4.0L V6 F/I	33-2106-1 ♦	HP-2010
Street KA	1.6L L4 F/I	33-2862 ♦	
Taurus	3.0L V6 F/I - DOHC	33-2150	HP-2010
Taurus	3.0L V6 F/I - OHV	33-2150	HP-2009
Thunderbird	3.9L V8 F/I	33-2266 ♦	HP-1014
2003 FORD			
Crown Victoria	4.6L V8 F/I	33-2272 ♦	HP-2010
E150	4.2L V6 F/I	E-0945	HP-2009
E150	4.6L V8 F/I	E-0945	HP-2010
E150	5.4L V8 F/I	E-0945	HP-2010
E150 Club Wagon	4.2L V6 F/I	E-0945	HP-2009
E150 Club Wagon	4.6L V8 F/I	E-0945	HP-2010
E150 Club Wagon	5.4L V8 F/I	E-0945	HP-2010
E250	4.6L V8 F/I	E-0945	HP-2010
E250	5.4L V8 F/I	E-0945	HP-2010
E350 Club Wagon	5.4L V8 F/I	E-0945 ♦	HP-2010
E350 Club Wagon	6.8L V10 F/I	E-0945 ♦	HP-2010
E350 Club Wagon	7.3L V8 DSL	33-2127*	HP-6001
E350 Van	5.4L V8 F/I	E-0945 ♦	HP-2010
E350 Van	6.8L V10 F/I	E-0945 ♦	HP-2010
E350 Van	7.3L V8 DSL	33-2127*	HP-6001

*Indicates 2 filters required ♦ - Intake kit available - see page 80 Applications updated daily at knfilters.com

Vehicle	Engine Type	Air Filter	Oil Filter
2003 FORD			
E450 Motorhome	6.8L V10 F/I - Class C	E-0945 ♦	
E450 Super Duty	6.8L V10 F/I	E-0945 ♦	HP-2010
E450 Super Duty	7.3L V8 DSL	33-2127*	HP-6001
E450 Super Duty Stripped Chassis	6.8L V10 F/I	E-0945	HP-2010
E450 Super Duty Stripped Chassis	7.3L V8 DSL	33-2127*	HP-6001
E550 Motorhome	6.8L V10 F/I - Class C	E-0945 ♦	
E550 Super Duty	7.3L V8 DSL	33-2127*	HP-6001
Escape	2.0L L4 F/I	33-2187	HP-1012
Escape	3.0L V6 F/I	33-2187	HP-2010
Escort ZX2	2.0L L4 F/I	E-0995 ♦	HP-1012
Excursion	5.4L V8 F/I	E-0945 ♦	HP-2010
Excursion	6.8L V10 F/I	E-0945 ♦	HP-2010
Excursion	7.3L V8 DSL	33-2248 ♦	HP-6001
Expedition	4.6L V8 F/I	E-0945 ♦	HP-2010
Expedition	5.4L V8 F/I	E-0945 ♦	HP-2010
Explorer	4.0L V6 F/I	33-2207 ♦	HP-2010
Explorer	4.6L V8 F/I	33-2207 ♦	HP-2010
Explorer Sport	4.0L V6 F/I	33-2106-1 ♦	HP-2010
Explorer Sport Trac	4.0L V6 F/I	33-2106-1 ♦	HP-2010
F150	4.2L V6 F/I	E-0945 ♦	HP-2009
F150	4.6L V8 F/I	E-0945 ♦	HP-2010
F150	5.4L V8 F/I	E-0945 ♦	HP-2010
F150 Harley Davidson	5.4L V8 F/I	33-2140-1 ♦	HP-2010
F150 Lightning	5.4L V8 F/I	33-2140-1 ♦	HP-2010
F250 Super Duty	5.4L V8 F/I	E-0945 ♦	HP-2010
F250 Super Duty	6.8L V10 F/I	E-0945 ♦	HP-2010
F250 Super Duty	7.3L V8 DSL	33-2248 ♦	HP-6001
F350 Super Duty	5.4L V8 F/I	E-0945 ♦	HP-2010
F350 Super Duty	6.8L V10 F/I	E-0945 ♦	HP-2010
F350 Super Duty	7.3L V8 DSL	33-2248 ♦	HP-6001
F450	6.8L V10 F/I	E-0945	HP-2010
F450 Super Duty	6.8L V10 F/I	E-0945	HP-2010
F450 Super Duty	7.3L V8 DSL	33-2248	HP-6001
F550 Super Duty	6.8L V10 F/I	E-0945	HP-2010
F550 Super Duty	7.3L V8 DSL	33-2248	HP-6001
Fairmont	5.4L V8 F/I	33-2852	HP-2010
Falcon	4.0L V6 F/I	33-2852	
Falcon	5.4L V8 F/I - DOHC	E-0945	
Falcon	5.4L V8 F/I - SOHC	33-2852	
Focus	1.4L L4 F/I	33-2819 ♦	
Focus	1.6L L4 F/I	33-2819 ♦	
Focus	1.8L L4 DSL	33-2819 ♦	
Focus	1.8L L4 F/I	33-2819 ♦	
Focus	2.0L L4 F/I	33-2819	
		33-2819 ♦	
		33-2819 ♦	
Focus	2.0L L4 F/I - DOHC	33-2819	HP-1012
Focus	2.0L L4 F/I - SOHC	33-2819	HP-2009
Focus	2.3L L4 F/I		HP-1002
Focus C-Max	1.6L L4 DSL	33-2874	
Focus C-Max	1.6L L4 F/I	33-2877	
Focus C-Max	1.8L L4 DSL	33-2886	
Focus C-Max	1.8L L4 F/I	33-2877 ♦	
Focus RS	2.0L L4 F/I	33-2266 ♦	
Focus ST170	2.0L L4 F/I	33-2819 ♦	
Focus SVT	2.0L L4 F/I	33-2819 ♦	HP-1012
Maverick	3.0L L4 F/I	33-2187	
Mondeo III	2.0L L4 DSL	33-2210 ♦	
Mondeo III	2.0L L4 F/I	33-2210 ♦	
Mondeo III	2.5L V6 F/I	33-2210 ♦	HP-2010
Motorhome	5.4L V8 F/I - Class C	E-0945	

Vehicle	Engine Type	Air Filter	Oil Filter
2003 FORD			
Mustang	3.8L V6 F/I	E-0940 ♦	HP-2009
Mustang GT	4.6L V8 F/I	E-0945 ♦	HP-2010
Mustang Mach 1	4.6L V8 F/I	E-0945 ♦	HP-2010
Mustang SVT Cobra	4.6L V8 F/I	E-0945 ♦	HP-2010
Puma	1.7L L4 F/I	33-2804 ♦	
Ranger	2.3L L4 F/I	33-2106-1 ♦	HP-2009
Ranger	2.5L L4 DSL	33-2167	
Ranger	3.0L V6 F/I	33-2106-1 ♦	HP-2009
Ranger	4.0L V6 F/I	33-2106-1 ♦	HP-2010
Street KA	1.6L L4 F/I	33-2862 ♦	
Taurus	3.0L V6 F/I - DOHC	33-2150	HP-2010
Taurus	3.0L V6 F/I - OHV	33-2150	HP-2009
Thunderbird	3.9L V8 F/I	33-2266 ♦	HP-1014
Windstar	3.8L V6 F/I	E-0995	HP-2009
2002 FORD			
Crown Victoria	4.6L V8 F/I	33-2272 ♦	HP-2010
E150 Econoline	4.2L V6 F/I	E-0945	HP-2009
E150 Econoline	4.6L V8 F/I	E-0945	HP-2010
E150 Econoline	5.4L V8 F/I	E-0945	HP-2010
E150 Econoline Club Wagon	4.2L V6 F/I	E-0945	HP-2009
E150 Econoline Club Wagon	4.6L V8 F/I	E-0945	HP-2010
E150 Econoline Club Wagon	5.4L V8 F/I	E-0945	HP-2010
E250 Econoline	4.2L V6 F/I	E-0945	HP-2009
E250 Econoline	5.4L V8 F/I	E-0945	HP-2010
E350 Econoline	5.4L V8 F/I	E-0945 ♦	HP-2010
E350 Econoline	6.8L V10 F/I	E-0945 ♦	HP-2010
E350 Econoline	7.3L V8 DSL	33-2127*	HP-6001
E350 Econoline Club Wagon	5.4L V8 F/I	E-0945 ♦	HP-2010
E350 Econoline Club Wagon	6.8L V10 F/I	E-0945 ♦	HP-2010
E350 Econoline Club Wagon	7.3L V8 DSL	33-2127*	HP-6001
E450 Econoline Super Duty	6.8L V10 F/I	E-0945 ♦	HP-2010
E450 Econoline Super Duty	7.3L V8 DSL	33-2127*	HP-6001
E450 Econoline Super Duty Stripped	6.8L V10 F/I	E-0945	HP-2010
E450 Econoline Super Duty Stripped	7.3L V8 DSL	33-2127*	HP-6001
E450 Motorhome	6.8L V10 F/I - Class C	E-0945 ♦	
E550 Motorhome	6.8L V10 F/I - Class C	E-0945 ♦	
Escape	2.0L L4 F/I	33-2187	HP-1012
Escape	3.0L V6 F/I	33-2187	HP-2010
Escort	2.0L L4 F/I	E-0995	HP-2009
Escort ZX2	2.0L L4 F/I	E-0995 ♦	HP-1012
Excursion	5.4L V8 F/I	E-0945 ♦	HP-2010
Excursion	6.8L V10 F/I	E-0945 ♦	HP-2010
Excursion	7.3L V8 DSL	33-2248 ♦	HP-6001
Expedition	4.6L V8 F/I	E-0945 ♦	HP-2010
Expedition	5.4L V8 F/I	E-0945 ♦	HP-2010
Explorer	4.0L V6 F/I	33-2207 ♦	HP-2010
Explorer	4.6L V8 F/I	33-2207 ♦	HP-2010
Explorer Sport	4.0L V6 F/I	33-2106-1 ♦	HP-2010
Explorer Sport Trac	4.0L V6 F/I	33-2106-1 ♦	HP-2010
F150	4.2L V6 F/I	E-0945 ♦	HP-2009
F150	4.6L V8 F/I	E-0945 ♦	HP-2010
F150	5.4L V8 F/I	E-0945 ♦	HP-2010
F150 Harley Davidson	5.4L V8 F/I	33-2140-1 ♦	HP-2010
F150 Lightning	5.4L V8 F/I	33-2140-1 ♦	HP-2010
F250 Super Duty	5.4L V8 F/I	E-0945 ♦	HP-2010

*Indicates 2 filters required ♦ - Intake kit available - see page 80 Applications updated daily at knfilters.com

2002 FORD

Vehicle	Engine Type	Air Filter	Oil Filter
F250 Super Duty	6.8L V10 F/I	E-0945 ♦	HP-2010
F250 Super Duty	7.3L V8 DSL	33-2248 ♦	HP-6001
F350 Super Duty	5.4L V8 F/I	E-0945 ♦	HP-2010
F350 Super Duty	6.8L V10 F/I	E-0945 ♦	HP-2010
F350 Super Duty	7.3L V8 DSL	33-2248 ♦	HP-6001
F450	6.8L V10 F/I	E-0945	HP-2010
F450 Super Duty	6.8L V10 F/I	E-0945	HP-2010
F450 Super Duty	7.3L V8 DSL	33-2248	HP-6001
F550 Super Duty	6.8L V10 F/I	E-0945	HP-2010
F550 Super Duty	7.3L V8 DSL	33-2248	HP-6001
Fairmont	4.0L V6 F/I - Turbo	33-2852	
Fairmont	5.4L V8 F/I	33-2852	HP-3001
Falcon	4.0L V6 F/I - from 10/02	33-2852	
Fiesta V	1.3L L4 F/I	33-2853 ♦	HP-1002
Focus	1.4L L4 F/I	33-2819 ♦	
Focus	1.6L L4 F/I	33-2819 ♦	
Focus	1.8L L4 DSL	33-2819 ♦	
Focus	1.8L L4 F/I	33-2819 ♦	
Focus	2.0L L4 F/I	33-2819	
		33-2819 ♦	
		33-2819 ♦	
Focus	2.0L L4 F/I - DOHC	33-2819	HP-1012
Focus	2.0L L4 F/I - SOHC	33-2819	HP-2009
Focus RS	2.0L L4 F/I	33-2266 ♦	
Focus ST170	2.0L L4 F/I	33-2819 ♦	
Focus SVT	2.0L L4 F/I	33-2819 ♦	HP-1012
Mondeo III	2.5L V6 F/I	33-2210 ♦	HP-2010
Mondeo III	3.0L V6 F/I	33-2210 ♦	
Mustang	3.8L V6 F/I	E-0940 ♦	HP-2009
Mustang GT	4.6L V8 F/I	E-0945 ♦	HP-2010
Puma	1.7L L4 F/I	33-2804 ♦	
Ranger	2.3L L4 F/I	33-2106-1 ♦	HP-2009
Ranger	2.5L L4 DSL	33-2167	
Ranger	3.0L V6 F/I	33-2106-1 ♦	HP-2009
Ranger	4.0L V6 F/I	33-2106-1 ♦	HP-2010
Taurus	3.0L V6 F/I - DOHC	33-2150	HP-2010
Taurus	3.0L V6 F/I - OHV	33-2150	HP-2009
Thunderbird	3.9L V8 F/I	33-2266	HP-1014
Transit	2.0L L4 DSL	33-2861	
Windstar	3.8L V6 F/I	E-0995	HP-2009

2001 FORD

Vehicle	Engine Type	Air Filter	Oil Filter
Crown Victoria	4.6L V8 F/I	33-2272 ♦	HP-2010
E150 Econoline	4.2L V6 F/I	E-0945	HP-2009
E150 Econoline	4.6L V8 F/I	E-0945	HP-2010
E150 Econoline	5.4L V8 F/I	E-0945	HP-2010
E150 Econoline Club Wagon	4.2L V6 F/I	E-0945	HP-2009
E150 Econoline Club Wagon	4.6L V8 F/I	E-0945	HP-2010
E150 Econoline Club Wagon	5.4L V8 F/I	E-0945	HP-2010
E250 Econoline	4.2L V6 F/I	E-0945	HP-2009
E250 Econoline	5.4L V8 F/I	E-0945	HP-2010
E350 Econoline	5.4L V8 F/I	E-0945 ♦	HP-2010
E350 Econoline	6.8L V10 F/I	E-0945 ♦	HP-2010
E350 Econoline	7.3L V8 DSL	33-2127*	HP-6001
E350 Econoline Club Wagon	5.4L V8 F/I	E-0945 ♦	HP-2010
E350 Econoline Club Wagon	6.8L V10 F/I	E-0945 ♦	HP-2010
E350 Econoline Club Wagon	7.3L V8 DSL	33-2127*	HP-6001
E450 Econoline Super Duty	6.8L V10 F/I	E-0945 ♦	HP-2010

2001 FORD

Vehicle	Engine Type	Air Filter	Oil Filter
E450 Econoline Super Duty	7.3L V8 DSL	33-2127*	HP-6001
E450 Econoline Super Duty Stripped	6.8L V10 F/I	E-0945	HP-2010
E450 Econoline Super Duty Stripped	7.3L V8 DSL	33-2127*	HP-6001
E450 Motorhome	6.8L V10 F/I - Class C	E-0945 ♦	
E550 Motorhome	6.8L V10 F/I - Class C	E-0945 ♦	
Escape	2.0L L4 F/I	33-2187	HP-1012
Escape	3.0L V6 F/I	33-2187	HP-2010
Escort	2.0L L4 F/I	E-0995	HP-2009
Escort ZX2	2.0L L4 F/I	E-0995 ♦	HP-1012
Excursion	5.4L V8 F/I	E-0945 ♦	HP-2010
Excursion	6.8L V10 F/I	E-0945 ♦	HP-2010
Excursion	7.3L V8 DSL	33-2248 ♦	HP-6001
Expedition	4.6L V8 F/I	E-0945 ♦	HP-2010
Expedition	5.4L V8 F/I	E-0945 ♦	HP-2010
Explorer	4.0L V6 F/I	33-2106-1 ♦	
		33-2106-1 ♦	
Explorer	4.0L V6 F/I - 22mm Thread	33-2106-1	HP-2010
Explorer	4.0L V6 F/I - 3/4 thread	33-2106-1	HP-3001
Explorer	5.0L V8 F/I	33-2106-1	HP-2010
Explorer Sport	4.0L V6 F/I	33-2106-1 ♦	
Explorer Sport	4.0L V6 F/I - 22mm Thread	33-2106-1	HP-2010
Explorer Sport	4.0L V6 F/I - 3/4 thread	33-2106-1	HP-3001
Explorer Sport Trac	4.0L V6 F/I	33-2106-1 ♦	
Explorer Sport Trac	4.0L V6 F/I - 22mm Thread	33-2106-1	HP-2010
Explorer Sport Trac	4.0L V6 F/I - 3/4 thread	33-2106-1	HP-3001
F150	4.2L V6 F/I	E-0945 ♦	HP-2009
F150	4.6L V8 F/I	E-0945 ♦	HP-2010
F150	5.4L V8 F/I	E-0945 ♦	HP-2010
F150 Harley Davidson	5.4L V8 F/I	E-0945 ♦	HP-2010
F150 Lightning	5.4L V8 F/I	33-2140-1 ♦	HP-2010
F250 Super Duty	5.4L V8 F/I	E-0945 ♦	HP-2010
F250 Super Duty	6.8L V10 F/I	E-0945 ♦	HP-2010
F250 Super Duty	7.3L V8 DSL	33-2248 ♦	HP-6001
F350 Super Duty	5.4L V8 F/I	E-0945 ♦	HP-2010
F350 Super Duty	6.8L V10 F/I	E-0945 ♦	HP-2010
F350 Super Duty	7.3L V8 DSL	33-2248 ♦	HP-6001
F450	6.8L V10 F/I	E-0945	HP-2010
F450 Super Duty	6.8L V10 F/I	E-0945	HP-2010
F450 Super Duty	7.3L V8 DSL	33-2248	HP-6001
F550 Super Duty	6.8L V10 F/I	E-0945	HP-2010
F550 Super Duty	7.3L V8 DSL	33-2248	HP-6001
Falcon	5.6L V8 F/I	E-0945	HP-1009
Fiesta Ikon	1.6L L4 F/I		HP-2009
Fiesta IV	1.6L L4 F/I	33-2804 ♦	
Focus	1.4L L4 F/I	33-2819 ♦	
Focus	1.6L L4 F/I	33-2819 ♦	
Focus	1.8L L4 DSL	33-2819 ♦	
Focus	1.8L L4 F/I	33-2819 ♦	
Focus	2.0L L4 F/I	33-2819	
		33-2819 ♦	
		33-2819 ♦	
Focus	2.0L L4 F/I - DOHC	33-2819	HP-1012
Focus	2.0L L4 F/I - SOHC	33-2819	HP-2009
Motorhome	5.4L V8 F/I - Class C	E-0945	
Mustang	3.8L V6 F/I	E-0940 ♦	HP-2009
Mustang GT	4.6L V8 F/I	E-0945 ♦	HP-2010
Mustang GT Bullitt	4.6L V8 F/I	E-0945 ♦	HP-2010
Mustang SVT Cobra	4.6L V8 F/I	E-0945 ♦	HP-2010
Ranger	2.3L L4 F/I	33-2106-1 ♦	HP-2009

*Indicates 2 filters required ♦ - Intake kit available - see page 80 Applications updated daily at knfilters.com

AIR & OIL FILTERS

Vehicle	Engine Type	Air Filter	Oil Filter
2001 FORD			
Ranger	2.5L L4 DSL	33-2167	
Ranger	2.5L L4 F/I	33-2106-1 ♦	HP-2009
Ranger	3.0L V6 F/I	33-2106-1 ♦	HP-2009
Ranger	4.0L V6 F/I	33-2106-1 ♦	HP-2010
Taurus	3.0L V6 F/I - DOHC	33-2150	HP-2010
Taurus	3.0L V6 F/I - OHV	33-2150	HP-2009
Transit	2.0L L4 DSL	33-2861	
Windstar	3.8L V6 F/I	E-0995	HP-2009
2000 FORD			
Contour	2.0L L4 F/I	33-2132	HP-1012
Contour	2.5L V6 F/I	33-2115-1	HP-2010
Contour SVT	2.5L V6 F/I	E-0998	HP-2010
Cougar	2.5L V6 F/I	33-2115-1 ♦	
Crown Victoria	4.6L V8 F/I	33-2272 ♦	HP-2010
E150 Econoline	4.2L V6 F/I	E-0945	HP-2009
E150 Econoline	4.6L V8 F/I	E-0945	HP-2010
E150 Econoline	5.4L V8 F/I	E-0945	HP-2010
E150 Econoline Club Wagon	4.2L V6 F/I	E-0945	HP-2009
E150 Econoline Club Wagon	4.6L V8 F/I	E-0945	HP-2010
E150 Econoline Club Wagon	5.4L V8 F/I	E-0945	HP-2010
E250 Econoline	4.2L V6 F/I	E-0945	HP-2009
E250 Econoline	5.4L V8 F/I	E-0945	HP-2010
E350 Econoline	5.4L V8 F/I	E-0945 ♦	HP-2010
E350 Econoline	6.8L V10 F/I	E-0945 ♦	HP-2010
E350 Econoline	7.3L V8 DSL	33-2127*	HP-6001
E350 Econoline Club Wagon	5.4L V8 F/I	E-0945 ♦	HP-2010
E350 Econoline Club Wagon	6.8L V10 F/I	E-0945 ♦	HP-2010
E350 Econoline Club Wagon	7.3L V8 DSL	33-2127*	HP-6001
E450 Econoline Super Duty	6.8L V10 F/I	E-0945 ♦	HP-2010
E450 Econoline Super Duty	7.3L V8 DSL	33-2127*	HP-6001
E450 Econoline Super Duty Stripped	6.8L V10 F/I	E-0945	HP-2010
E450 Econoline Super Duty Stripped	7.3L V8 DSL	33-2127*	HP-6001
E450 Motorhome	6.8L V10 F/I - Class C	E-0945 ♦	
E550 Motorhome	6.8L V10 F/I - Class C	E-0945 ♦	
Escort	2.0L L4 F/I	E-0995	HP-2009
Escort Express	1.8L L4 DSL	33-2627	
Escort VI	1.8L L4 DSL	33-2627 ♦	
Escort VII	1.8L L4 F/I	33-2627 ♦	
Escort ZX2	2.0L L4 F/I	E-0995 ♦	HP-1012
Excursion	5.4L V8 F/I	E-0945 ♦	HP-2010
Excursion	6.8L V10 F/I	E-0945 ♦	HP-2010
Excursion	7.3L V8 DSL	33-2248 ♦	HP-6001
Expedition	4.6L V8 F/I	E-0945 ♦	HP-2010
Expedition	5.4L V8 F/I	E-0945 ♦	HP-2010
Explorer	4.0L V6 F/I	33-2106-1 ♦	HP-3001
		33-2106-1 ♦	HP-3001
Explorer	5.0L V8 F/I	33-2106-1	HP-2010
Explorer Sport	4.0L V6 F/I	33-2106-1	HP-3001
F150	4.2L V6 F/I	E-0945 ♦	HP-2009
F150	4.6L V8 F/I	E-0945 ♦	HP-2010
F150	5.4L V8 F/I	E-0945 ♦	HP-2010
F150 Harley Davidson	5.4L V8 F/I	E-0945 ♦	HP-2010
F150 Lightning	5.4L V8 F/I	33-2140-1 ♦	HP-2010
F250 Super Duty	5.4L V8 F/I	E-0945 ♦	HP-2010
F250 Super Duty	6.8L V10 F/I	E-0945 ♦	HP-2010

Vehicle	Engine Type	Air Filter	Oil Filter
2000 FORD			
F250 Super Duty	7.3L V8 DSL	33-2248 ♦	HP-6001
F350 Super Duty	5.4L V8 F/I	E-0945 ♦	HP-2010
F350 Super Duty	6.8L V10 F/I	E-0945 ♦	HP-2010
F350 Super Duty	7.3L V8 DSL	33-2248 ♦	HP-6001
F450 Super Duty	6.8L V10 F/I	E-0945	HP-2010
F450 Super Duty	7.3L V8 DSL	33-2248	HP-6001
F550 Super Duty	6.8L V10 F/I	E-0945	HP-2010
F550 Super Duty	7.3L V8 DSL	33-2248	HP-6001
Fiesta IV	1.6L L4 F/I	33-2804 ♦	
Focus	1.4L L4 F/I	33-2819 ♦	
Focus	1.6L L4 F/I	33-2819 ♦	
Focus	1.8L L4 DSL	33-2819 ♦	
Focus	1.8L L4 F/I	33-2819 ♦	
Focus	2.0L L4 F/I	33-2819	
		33-2819 ♦	
		33-2819 ♦	
Focus	2.0L L4 F/I - DOHC	33-2819	HP-1012
Focus	2.0L L4 F/I - SOHC	33-2819	HP-2009
Mondeo III	2.5L V6 F/I	33-2210 ♦	
Motorhome	5.4L V8 F/I - Class C	E-0945	
Mustang	3.8L V6 F/I	E-0940 ♦	HP-2009
Mustang GT	4.6L V8 F/I	E-0945 ♦	HP-2010
Mustang SVT Cobra	4.6L V8 F/I	E-0945 ♦	HP-2010
Mustang SVT Cobra R	5.4L V8 F/I		HP-2010
Ranger	2.5L L4 DSL	33-2167	
Ranger	2.5L L4 F/I	33-2106-1 ♦	HP-2009
Ranger	3.0L V6 F/I	33-2106-1 ♦	HP-2009
Ranger	4.0L V6 F/I	33-2106-1 ♦	HP-3001
Taurus	3.0L V6 F/I - DOHC	33-2150	HP-2010
Taurus	3.0L V6 F/I - OHV	33-2150	HP-2009
Windstar	3.0L V6 F/I	E-0995	HP-2009
Windstar	3.8L V6 F/I	E-0995	HP-2009
1999 FORD			
Contour	2.0L L4 F/I	33-2132	HP-1012
Contour	2.5L V6 F/I	33-2115-1	HP-2010
Contour SVT	2.5L V6 F/I	E-0998	HP-2010
Cougar	2.5L V6 F/I	33-2115-1 ♦	
Crown Victoria	4.6L V8 F/I	33-2272 ♦	HP-2010
E150 Econoline	4.2L V6 F/I	E-0945	HP-2009
E150 Econoline	4.6L V8 F/I	E-0945	HP-2010
E150 Econoline	5.4L V8 F/I	E-0945	HP-2010
E150 Econoline Club Wagon	4.2L V6 F/I	E-0945	HP-2009
E150 Econoline Club Wagon	4.6L V8 F/I	E-0945	HP-2010
E150 Econoline Club Wagon	5.4L V8 F/I	E-0945	HP-2010
E250 Econoline	4.2L V6 F/I	E-0945	HP-2009
E250 Econoline	5.4L V8 F/I	E-0945	HP-2010
E350 Econoline	5.4L V8 F/I	E-0945 ♦	HP-2010
E350 Econoline	6.8L V10 F/I	E-0945 ♦	HP-2010
E350 Econoline	7.3L V8 DSL	33-2127*	HP-6001
E350 Econoline Club Wagon	5.4L V8 F/I	E-0945 ♦	HP-2010
E350 Econoline Club Wagon	6.8L V10 F/I	E-0945 ♦	HP-2010
E350 Econoline Club Wagon	7.3L V8 DSL	33-2127*	HP-6001
E450 Econoline Super Duty	6.8L V10 F/I	E-0945 ♦	HP-2010
E450 Motorhome	6.8L V10 F/I - Class C	E-0945 ♦	
E550 Econoline Super Duty	6.8L V10 F/I	E-0945 ♦	HP-2010
E550 Motorhome	6.8L V10 F/I - Class C	E-0945 ♦	

*Indicates 2 filters required ♦ - Intake kit available - see page 80 Applications updated daily at knfilters.com

Partial Listing - Complete List of Vehicles and Applications at knfilters.com

Vehicle	Engine Type	Air Filter	Oil Filter
1999 FORD			
Econoline Super Duty	5.4L V8 F/I	E-0945	HP-2010
Econoline Super Duty	7.3L V8 DSL	33-2127*	HP-6001
Escort	1.6L L4 F/I	33-2627	
Escort	2.0L L4 F/I	E-0995	HP-2009
Escort Express	1.4L L4 F/I	33-2627 ♦	
Escort Express	1.8L L4 DSL	33-2627	
Escort VI	1.8L L4 DSL	33-2627 ♦	
Escort VII	1.3L L4 F/I	E-9091	
Escort VII	1.4L L4 F/I	33-2627 ♦	
Escort VII	1.6L L4 F/I	33-2627 ♦	
Escort VII	1.8L L4 DSL	33-2627	
Escort VII	1.8L L4 F/I	33-2627 ♦	
Escort ZX2	2.0L L4 F/I	E-0995	HP-1012
Expedition	4.6L V8 F/I	E-0945 ♦	HP-2010
Expedition	5.4L V8 F/I	E-0945 ♦	HP-2010
Explorer	4.0L V6 F/I	33-2106-1 ♦	HP-3001
		33-2106-1 ♦	HP-3001
Explorer	5.0L V8 F/I	33-2106-1	HP-2010
F150	4.2L V6 F/I	E-0945 ♦	HP-2009
F150	4.6L V8 F/I	E-0945 ♦	HP-2010
F150	5.4L V8 F/I	E-0945 ♦	HP-2010
F150 Lightning	5.4L V8 F/I	33-2140-1 ♦	HP-2010
F250	4.6L V8 F/I	E-0945 ♦	HP-2010
F250	5.4L V8 F/I	E-0945 ♦	HP-2010
F250 Super Duty	5.4L V8 F/I	E-0945 ♦	HP-2010
F250 Super Duty	6.8L V10 F/I	E-0945 ♦	HP-2010
F250 Super Duty	7.3L V8 DSL		HP-6001
F250 Super Duty	7.3L V8 DSL - from 12/98	33-2248 ♦	HP-6001
F250 Super Duty	7.3L V8 DSL - to 12/98	33-2123 ♦	HP-6001
F350 Super Duty	5.4L V8 F/I	E-0945 ♦	HP-2010
F350 Super Duty	6.8L V10 F/I	E-0945 ♦	HP-2010
F350 Super Duty	7.3L V8 DSL		HP-6001
F350 Super Duty	7.3L V8 DSL - from 12/98	33-2248 ♦	HP-6001
F350 Super Duty	7.3L V8 DSL - to 12/98	33-2123 ♦	HP-6001
F450	6.8L V10 F/I	E-0945	HP-2010
F450 Super Duty	6.8L V10 F/I	E-0945 ♦	HP-2010
F450 Super Duty	7.3L V8 DSL		HP-6001
F450 Super Duty	7.3L V8 DSL - from 12/98	33-2248 ♦	HP-6001
F450 Super Duty	7.3L V8 DSL - to 12/98	33-2123 ♦	HP-6001
F550 Super Duty	6.8L V10 F/I	E-0945 ♦	HP-2010
F550 Super Duty	7.3L V8 DSL		HP-6001
F550 Super Duty	7.3L V8 DSL - from 12/98	33-2248 ♦	HP-6001
F550 Super Duty	7.3L V8 DSL - to 12/98	33-2123 ♦	HP-6001
Focus	2.0L L4 F/I	33-2819 ♦	
Motorhome	5.4L V8 F/I - Class C	E-0945	
Mustang	3.8L V6 F/I	E-0940 ♦	HP-2009
Mustang GT	4.6L V8 F/I	E-0945 ♦	HP-2010
Mustang SVT Cobra	4.6L V8 F/I	E-0945 ♦	HP-2010
Ranger	2.5L L4 DSL	33-2167	
Ranger	2.5L L4 F/I	33-2106-1 ♦	HP-2009
Ranger	3.0L V6 F/I	33-2106-1 ♦	HP-2009
Ranger	4.0L V6 F/I	33-2106-1 ♦	HP-3001
Taurus	3.0L V6 F/I - DOHC	33-2107	HP-2010
Taurus	3.0L V6 F/I - OHV	33-2107	HP-2009
Taurus	3.4L V8 F/I	33-2150	HP-2009
Windstar	3.0L V6 F/I	E-0995	HP-2009
Windstar	3.8L V6 F/I	E-0995	HP-2009
1998 FORD			
Contour	2.0L L4 F/I	33-2132	HP-1012
Contour	2.5L V6 F/I	33-2115-1	HP-2010
Contour SVT	2.5L V6 F/I	E-0998	HP-2010

Vehicle	Engine Type	Air Filter	Oil Filter
1998 FORD			
Crown Victoria	4.6L V8 F/I	33-2272	HP-2010
E150 Econoline	4.2L V6 F/I	E-0945	HP-2009
E150 Econoline	4.6L V8 F/I	E-0945	HP-2010
E150 Econoline	5.4L V8 F/I	E-0945	HP-2010
E150 Econoline Club Wagon	4.2L V6 F/I	E-0945	HP-2009
E150 Econoline Club Wagon	4.6L V8 F/I	E-0945	HP-2010
E150 Econoline Club Wagon	5.4L V8 F/I	E-0945	HP-2010
E250 Econoline	4.2L V6 F/I	E-0945	HP-2009
E250 Econoline	5.4L V8 F/I	E-0945	HP-2010
E350 Econoline	5.4L V8 F/I	E-0945 ♦	HP-2010
E350 Econoline	6.8L V10 F/I	E-0945 ♦	HP-2010
E350 Econoline	7.3L V8 DSL	33-2127*	HP-6001
E350 Econoline Club Wagon	5.4L V8 F/I	E-0945 ♦	HP-2010
E350 Econoline Club Wagon	6.8L V10 F/I	E-0945 ♦	HP-2010
E350 Econoline Club Wagon	7.3L V8 DSL	33-2127*	HP-6001
E450 Econoline Super Duty	6.8L V10 F/I	E-0945 ♦	HP-2010
E450 Motorhome	6.8L V10 F/I - Class C	E-0945 ♦	
E550 Econoline Super Duty	6.8L V10 F/I	E-0945 ♦	HP-2010
E550 Motorhome	6.8L V10 F/I - Class C	E-0945 ♦	
Econoline Super Duty	6.8L V10 F/I	E-0945	HP-2010
Econoline Super Duty	7.3L V8 DSL	33-2127*	HP-6001
Escort	1.6L L4 F/I	33-2627	
Escort	2.0L L4 F/I	E-0995	HP-2009
Escort Express	1.4L L4 F/I	33-2627 ♦	
Escort Express	1.8L L4 DSL	33-2627	
Escort VI	1.8L L4 DSL	33-2627 ♦	
Escort VII	1.3L L4 F/I	E-9091	
Escort VII	1.4L L4 F/I	33-2627 ♦	
Escort VII	1.6L L4 F/I	33-2627 ♦	
Escort VII	1.8L L4 DSL	33-2627	
Escort VII	1.8L L4 F/I	33-2627 ♦	
Escort VII	2.0L L4 F/I	33-2627	
Escort ZX2	2.0L L4 F/I	E-0995	HP-1012
Expedition	4.6L V8 F/I	E-0945 ♦	HP-2010
Expedition	5.4L V8 F/I	E-0945 ♦	HP-2010
Explorer	4.0L V6 F/I		HP-3001
Explorer	4.0L V6 F/I - w/Panel Filter	33-2106-1 ♦	HP-3001
		33-2106-1 ♦	HP-3001
Explorer	4.0L V6 F/I - w/Round Filter	E-0996 ♦	HP-3001
		E-0996 ♦	HP-3001
Explorer	5.0L V8 F/I		HP-2010
Explorer	5.0L V8 F/I - w/Panel Filter	33-2106-1	HP-2010
Explorer	5.0L V8 F/I - w/Round Filter	E-0996	HP-2010
F150	4.2L V6 F/I	E-0945 ♦	HP-2009
F150	4.6L V8 F/I	E-0945 ♦	HP-2010
F150	5.4L V8 F/I	E-0945 ♦	HP-2010
F250	4.6L V8 F/I	E-0945 ♦	HP-2010
F250	5.4L V8 F/I	E-0945 ♦	HP-2010
Falcon	4.0L V6 F/I	33-2708	HP-3001
Motorhome	5.4L V8 F/I - Class C	E-0945	
Mustang	3.8L V6 F/I	E-0940	HP-2009
Mustang GT	4.6L V8 F/I	E-0945 ♦	HP-2010
Mustang SVT Cobra	4.6L V8 F/I	E-0945 ♦	HP-2010
Ranger	2.5L L4 F/I	33-2106-1 ♦	HP-2009

*Indicates 2 filters required ♦ - Intake kit available - see page 80 Applications updated daily at knfilters.com

Vehicle	Engine Type	Air Filter	Oil Filter
1998 FORD			
Ranger	3.0L V6 F/I	33-2106-1 ♦	HP-2009
Ranger	4.0L V6 F/I	33-2106-1 ♦	HP-3001
Scorpio II	2.5L L4 DSL	33-2013	
Taurus	3.0L V6 F/I - DOHC	33-2107	HP-2010
Taurus	3.0L V6 F/I - OHV	33-2107	HP-2009
Taurus	3.4L V8 F/I	33-2150	HP-2009
Windstar	3.0L V6 F/I		HP-2009
Windstar	3.8L V6 F/I	E-0995	HP-2009
1997 FORD			
Aerostar	3.0L V6 F/I	33-2024	HP-2009
Aerostar	4.0L V6 F/I	33-2024	HP-3001
Aspire	1.3L L4 F/I		HP-1008
Contour	2.0L L4 F/I	33-2132	HP-2004
Contour	2.5L V6 F/I	33-2115-1	HP-2010
Crown Victoria	4.6L V8 F/I	33-2272	HP-2010
E150 Econoline	4.2L V6 F/I	E-0945	HP-2009
E150 Econoline	4.6L V8 F/I	E-0945	HP-2010
E150 Econoline	5.4L V8 F/I	E-0945	HP-2010
E150 Econoline Club Wagon	4.2L V6 F/I	E-0945	HP-2009
E150 Econoline Club Wagon	4.6L V8 F/I	E-0945	HP-2010
E150 Econoline Club Wagon	5.4L V8 F/I	E-0945	HP-2010
E250 Econoline	5.4L V8 F/I	E-0945	HP-2010
E350 Econoline	5.4L V8 F/I	E-0945 ♦	HP-2010
E350 Econoline	6.8L V10 F/I	E-0945 ♦	HP-2010
E350 Econoline	7.3L V8 DSL	33-2127*	HP-6001
E350 Econoline Club Wagon	5.4L V8 F/I	E-0945 ♦	HP-2010
E350 Econoline Club Wagon	6.8L V10 F/I	E-0945 ♦	HP-2010
E350 Econoline Club Wagon	7.3L V8 DSL	33-2127*	HP-6001
E450 Econoline Super Duty	6.8L V10 F/I	E-0945 ♦	HP-2010
E450 Motorhome	6.8L V10 F/I - Class C	E-0945 ♦	
E550 Econoline Super Duty	6.8L V10 F/I	E-0945 ♦	HP-2010
E550 Motorhome	6.8L V10 F/I - Class C	E-0945 ♦	
Econoline Super Duty	5.4L V8 F/I	E-0945	HP-2010
Econoline Super Duty	7.3L V8 DSL	33-2127*	HP-6001
Escort	2.0L L4 F/I	E-0995	HP-2009
Escort Express	1.4L L4 F/I	33-2627 ♦	
Escort Express	1.8L L4 DSL	33-2627	
Escort VI	1.8L L4 DSL	33-2627 ♦	
Escort VII	1.3L L4 F/I	E-9091	
Escort VII	1.4L L4 F/I	33-2627 ♦	
Escort VII	1.6L L4 F/I	33-2627 ♦	
Escort VII	1.8L L4 DSL	33-2627	
Escort VII	1.8L L4 F/I	33-2627 ♦	
Escort VII	2.0L L4 F/I	33-2627	
Expedition	4.6L V8 F/I	E-0945 ♦	HP-2010
Expedition	5.4L V8 F/I	E-0945 ♦	HP-2010
Explorer	4.0L V6 F/I		HP-3001
Explorer	4.0L V6 F/I - w/Panel Filter	33-2106-1 ♦	HP-3001
		33-2106-1 ♦	HP-3001
Explorer	4.0L V6 F/I - w/Round Filter	E-0996 ♦	HP-3001
		E-0996 ♦	HP-3001
Explorer	5.0L V8 F/I		HP-2010
Explorer	5.0L V8 F/I - w/Panel Filter	33-2106-1 ♦	HP-2010
Explorer	5.0L V8 F/I - w/Round Filter	E-0996 ♦	HP-2010

Vehicle	Engine Type	Air Filter	Oil Filter
1997 FORD			
F53	7.5L V8 F/I	33-2023	HP-3001
F59	7.3L V8 DSL	E-1946	HP-6001
F150	4.2L V6 F/I	E-0945 ♦	HP-2009
F150	4.6L V8 F/I	E-0945 ♦	HP-2010
F150	5.4L V8 F/I	E-0945 ♦	HP-2010
F250	4.6L V8 F/I	E-0945 ♦	HP-2010
F250	5.4L V8 F/I	E-0945 ♦	HP-2010
F250	5.8L V8 F/I	33-2023	HP-2010
F250	7.3L V8 DSL	E-1946 ♦	HP-6001
F250	7.5L V8 F/I	33-2023 ♦	HP-3001
F350	5.8L V8 F/I	33-2023	HP-2010
F350	7.3L V8 DSL	E-1946 ♦	HP-6001
F350	7.5L V8 F/I	33-2023 ♦	HP-3001
F450	7.3L V8 DSL	E-1946	HP-6001
F450	7.3L V8 DSL - OEM FD4595	E-1946	FF-4595
F450	7.5L V8 F/I	33-2023	HP-3001
Motorhome	5.4L V8 F/I - Class C	E-0945	
Mustang	3.8L V6 F/I	E-0940	HP-2009
Mustang GT	4.6L V8 F/I	E-0945 ♦	HP-2010
Mustang SVT Cobra	4.6L V8 F/I	E-0945 ♦	HP-2010
Probe	2.0L L4 F/I - Non-US	33-2676	
Probe	2.0L L4 F/I - US	33-2049	HP-1006
Probe	2.5L V6 F/I - Non-US	33-2676	
Probe	2.5L V6 F/I - US	33-2049 ♦	HP-1010
Ranger	2.3L L4 F/I	E-0995 ♦	HP-3001
Ranger	3.0L V6 F/I	E-0995	HP-2009
Ranger	4.0L V6 F/I		HP-3001
Ranger	4.0L V6 F/I - w/Round Filter	E-0995 ♦	HP-3001
Taurus	3.0L V6 F/I	33-2107	HP-2009
Taurus	3.4L V8 F/I	33-2107	HP-2009
Taurus LX	3.0L V6 F/I	33-2107	HP-2010
Thunderbird	3.8L V6 F/I	33-2033 ♦	HP-2009
Thunderbird	4.6L V8 F/I	33-2033 ♦	HP-2010
Windstar	3.0L V6 F/I	33-2024	HP-2009
Windstar	3.8L V6 F/I	E-0995	HP-2009
1996 FORD			
Aerostar	3.0L V6 F/I	33-2024	HP-2009
Aerostar	4.0L V6 F/I	33-2024	HP-3001
Aspire	1.3L L4 F/I		HP-1008
Bronco	5.0L V8 F/I	33-2023 ♦	HP-3001
Bronco	5.8L V8 F/I	33-2023 ♦	HP-2010
Contour	2.0L L4 F/I	33-2132	HP-2004
Contour	2.5L V6 F/I	33-2115-1	HP-2010
Crown Victoria	4.6L V8 F/I	33-2272	HP-2010
E150 Econoline	4.9L L6 F/I	33-2023	HP-3001
E150 Econoline	5.8L V8 F/I	33-2023	
E150 Econoline	5.8L V8 F/I - w/o oil cooler	33-2023	HP-3001
E150 Econoline	5.8L V8 F/I - w/oil cooler	33-2023	HP-2010
E150 Econoline Club Wagon	4.9L L6 F/I	33-2023	HP-3001
E150 Econoline Club Wagon	5.0L V8 F/I	33-2023	HP-3001
E150 Econoline Club Wagon	5.8L V8 F/I	33-2023	
E150 Econoline Club Wagon	5.8L V8 F/I - w/o oil cooler	33-2023	HP-3001
E150 Econoline Club Wagon	5.8L V8 F/I - w/oil cooler	33-2023	HP-2010
E250 Econoline	4.9L L6 F/I	33-2023	HP-3001
E250 Econoline	5.8L V8 F/I	33-2023	
E250 Econoline	5.8L V8 F/I - w/o oil cooler	33-2023	HP-3001
E350 Econoline	5.8L V8 F/I	33-2023	

*Indicates 2 filters required ♦ - Intake kit available - see page 80 Applications updated daily at knfilters.com

Vehicle	Engine Type	Air Filter	Oil Filter
1996 FORD			
E350 Econoline	5.8L V8 F/I - w/o oil cooler	33-2023	HP-3001
E350 Econoline	5.8L V8 F/I - w/oil cooler	33-2023	HP-2010
E350 Econoline	7.3L V8 DSL	33-2127*	HP-6001
E350 Econoline	7.5L V8 F/I	33-2099	HP-3001
E350 Econoline Club Wagon	5.8L V8 F/I	33-2023	
E350 Econoline Club Wagon	5.8L V8 F/I - w/o oil cooler	33-2023	HP-3001
E350 Econoline Club Wagon	5.8L V8 F/I - w/oil cooler	33-2023	HP-2010
E350 Econoline Club Wagon	7.3L V8 DSL	33-2127*	HP-6001
E350 Econoline Club Wagon	7.5L V8 F/I	33-2099	HP-3001
Econoline Super Duty	7.5L V8 F/I		HP-3001
Escort	1.8L L4 F/I	33-2034	HP-1008
Escort	1.9L L4 F/I	33-2126	HP-2009
Escort Express	1.8L L4 DSL	33-2627	
Escort VI	1.8L L4 DSL	33-2627 ♦	
Escort VII	1.8L L4 DSL	33-2627	
Escort VII	1.8L L4 F/I	33-2627 ♦	
Escort VII	2.0L L4 F/I	33-2665 ♦	
Explorer	4.0L V6 F/I	E-0995 ♦	HP-3001
Explorer	5.0L V8 F/I	E-0996 ♦	HP-2010
F53	7.5L V8 F/I	33-2023	HP-3001
F150	4.9L L6 F/I	33-2023 ♦	HP-3001
F150	5.0L V8 F/I	33-2023 ♦	HP-3001
F150	5.8L V8 F/I	33-2023 ♦	HP-2010
F250	4.9L L6 F/I	33-2023 ♦	HP-3001
F250	5.0L V8 F/I	33-2023 ♦	HP-3001
F250	5.8L V8 F/I	33-2023 ♦	HP-2010
F250	7.3L V8 DSL	E-1946 ♦	HP-6001
F250	7.5L V8 F/I	33-2023 ♦	HP-3001
F350	4.9L L6 F/I	33-2023 ♦	HP-3001
F350	5.8L V8 F/I	33-2023 ♦	HP-2010
F350	7.3L V8 DSL	E-1946 ♦	HP-6001
F350	7.5L V8 F/I	33-2023 ♦	HP-3001
F450	7.3L V8 DSL	E-1946	HP-6001
F450	7.3L V8 DSL - OEM FD4595	E-1946	FF-4595
F450	7.5L V8 F/I	33-2023	HP-3001
Maverick	2.4L L4 F/I	33-2031-2	
Mondeo II	2.5L V6 F/I	33-2115-1 ♦	
Mustang	3.8L V6 F/I	E-0940	HP-2009
Mustang GT	4.6L V8 F/I	E-0945 ♦	HP-2010
Mustang SVT Cobra	4.6L V8 F/I	E-0945 ♦	HP-2010
Probe	2.0L L4 F/I - Non-US	33-2676	
Probe	2.0L L4 F/I - US	33-2049	HP-1006
Probe	2.5L V6 F/I - Non-US	33-2676	
Probe	2.5L V6 F/I - US	33-2049 ♦	HP-1010
Ranger	2.3L L4 F/I	E-0995 ♦	HP-3001
Ranger	3.0L V6 F/I	E-0995	HP-2009
Ranger	4.0L V6 F/I	E-0995 ♦	HP-3001
Taurus	3.0L V6 F/I	33-2107	HP-2009
Taurus	3.4L V8 F/I	33-2107	HP-2009
Taurus LX	3.0L V6 F/I	33-2107	HP-2010
Thunderbird	3.8L V6 F/I	33-2033 ♦	HP-2009
Thunderbird	4.6L V8 F/I	33-2033 ♦	HP-2010
Windstar	3.0L V6 F/I	33-2024	HP-2009
Windstar	3.8L V6 F/I	E-0995	HP-2009
1995 FORD			
Aerostar	3.0L V6 F/I	33-2024	HP-2009
Aerostar	4.0L V6 F/I	33-2024	HP-3001
Aspire	1.3L L4 F/I		HP-1004

Vehicle	Engine Type	Air Filter	Oil Filter
1995 FORD			
Bronco	5.0L V8 F/I	33-2023 ♦	HP-3001
Bronco	5.8L V8 F/I	33-2023 ♦	HP-2010
Contour	2.0L L4 F/I	33-2132	HP-2004
Contour	2.5L V6 F/I	33-2115-1	HP-2010
Crown Victoria	4.6L V8 F/I	33-2272	HP-2010
E150 Econoline	4.9L L6 F/I	33-2023	HP-3001
E150 Econoline	5.0L V8 F/I	33-2023	HP-3001
E150 Econoline	5.8L V8 F/I	33-2023	HP-3001
E150 Econoline Club Wagon	4.9L L6 F/I	33-2023	HP-3001
E150 Econoline Club Wagon	5.0L V8 F/I	33-2023	HP-3001
E150 Econoline Club Wagon	5.8L V8 F/I	33-2023	HP-3001
E250 Econoline	4.9L L6 F/I	33-2023	HP-3001
E250 Econoline	5.8L V8 F/I	33-2023	HP-3001
E350 Econoline	5.8L V8 F/I	33-2023	HP-3001
E350 Econoline	7.3L V8 DSL	33-2127*	HP-6001
E350 Econoline	7.5L V8 F/I	33-2023	HP-3001
E350 Econoline Club Wagon	5.8L V8 F/I	33-2023	HP-3001
E350 Econoline Club Wagon	7.3L V8 DSL	33-2127*	HP-6001
E350 Econoline Club Wagon	7.5L V8 F/I	33-2023	HP-3001
Escort	1.8L L4 F/I	33-2034 ♦	HP-1008
Escort	1.9L L4 F/I	33-2126	HP-2009
Escort Express	1.8L L4 DSL	33-2627	
Escort VI	1.8L L4 DSL	33-2627 ♦	
Escort VI	1.8L L4 F/I	33-2627 ♦	
Escort VI	2.0L L4 F/I - 220BHP	33-2665 ♦	
Escort VII	1.8L L4 DSL	33-2627	
Escort VII	1.8L L4 F/I	33-2627 ♦	
Explorer	4.0L V6 F/I	E-0995 ♦	HP-3001
F53	7.5L V8 F/I	33-2023	HP-3001
F59	7.3L V8 DSL	E-1946	HP-6001
F150	4.9L L6 F/I	33-2023 ♦	HP-3001
F150	5.0L V8 F/I	33-2023 ♦	HP-3001
F150	5.8L V8 F/I	33-2023 ♦	HP-2010
F150 Lightning	5.8L V8 F/I	33-2023 ♦	HP-2010
F250	4.9L L6 F/I	33-2023 ♦	HP-3001
F250	5.0L V8 F/I	33-2023 ♦	HP-3001
F250	5.8L V8 F/I	33-2023 ♦	HP-2010
F250	7.3L V8 DSL	E-1946 ♦	HP-6001
F250	7.5L V8 F/I	33-2023 ♦	HP-3001
F350	5.8L V8 F/I	33-2023 ♦	HP-2010
F350	7.3L V8 DSL	E-1946 ♦	HP-6001
F350	7.5L V8 F/I	33-2023 ♦	HP-3001
F450	7.3L V8 DSL	E-1946	HP-6001
F450	7.3L V8 DSL - OEM FD4595	E-1946	FF-4595
F450	7.5L V8 F/I	33-2023	HP-3001
Maverick	2.4L L4 F/I	33-2031-2	
Mustang	3.8L V6 F/I	E-0940	HP-2009
Mustang	5.0L V8 F/I	E-0940 ♦	HP-3001
Mustang	5.8L V8 F/I	E-0945	
Mustang SVT Cobra	5.0L V8 F/I	E-0940 ♦	HP-2004
Probe	2.0L L4 F/I - Non-US	33-2676	
Probe	2.0L L4 F/I - US	33-2049	HP-1006
Probe	2.5L V6 F/I - Non-US	33-2676	
Probe	2.5L V6 F/I - US	33-2049 ♦	HP-1010
Ranger	2.3L L4 F/I	E-0995 ♦	HP-3001
Ranger	3.0L V6 F/I	E-0995	HP-2009
Ranger	4.0L V6 F/I	E-0995 ♦	HP-3001
Taurus	3.0L V6 F/I	33-2024	HP-2009
Taurus	3.8L V6 F/I	33-2024	HP-2009

*Indicates 2 filters required ♦ - Intake kit available - see page 80 Applications updated daily at knfilters.com

Vehicle	Engine Type	Air Filter	Oil Filter
1995 FORD			
Taurus SHO	3.0L V6 F/I	33-2040	HP-2009
Taurus SHO	3.2L V6 F/I	33-2040	HP-2009
Thunderbird	3.8L V6 F/I	33-2033	HP-2009
		33-2033 ♦	HP-2009
Thunderbird	4.6L V8 F/I	33-2033 ♦	HP-2010
Windstar	3.8L V6 F/I		HP-2009
1994 FORD			
Aerostar	3.0L V6 F/I	33-2024	HP-2009
Aerostar	4.0L V6 F/I	33-2024	HP-3001
Aspire	1.3L L4 F/I		HP-1004
Bronco	5.0L V8 F/I	33-2023 ♦	HP-3001
Bronco	5.8L V8 F/I	33-2023 ♦	HP-2010
Crown Victoria	4.6L V8 F/I	33-2272	HP-2010
E150 Econoline	5.0L V8 F/I	33-2023	HP-3001
E150 Econoline	5.8L V8 F/I	33-2023	HP-3001
E150 Econoline Club Wagon	5.0L V8 F/I	33-2023	HP-3001
E150 Econoline Club Wagon	5.8L V8 F/I	33-2023	HP-3001
E350 Econoline	5.8L V8 F/I	33-2023	HP-3001
E350 Econoline	7.3L V8 DSL	E-1461	HP-4002
E350 Econoline	7.5L V8 F/I	33-2023	HP-3001
E350 Econoline Club Wagon	5.8L V8 F/I	33-2023	HP-3001
E350 Econoline Club Wagon	7.3L V8 DSL	E-1461	HP-4002
E350 Econoline Club Wagon	7.5L V8 F/I	33-2023	HP-3001
Escort	1.8L L4 F/I	33-2034 ♦	HP-1008
Escort	1.9L L4 EFI	33-2126	HP-2009
Escort Express	1.8L L4 DSL	33-2627	
Escort VI	1.8L L4 DSL	33-2627 ♦	
Escort VI	1.8L L4 F/I	33-2627 ♦	
Escort VI	2.0L L4 F/I - 150BHP	33-2627 ♦	
Escort VI	2.0L L4 F/I - 220BHP	33-2665 ♦	
Explorer	4.0L V6 F/I	33-2024	HP-3001
F53	7.5L V8 F/I	33-2023	HP-3001
F150	4.9L L6 F/I	33-2023 ♦	HP-3001
F150	5.0L V8 F/I	33-2023 ♦	HP-3001
F150	5.8L V8 F/I	33-2023 ♦	HP-2010
F150 Lightning	5.8L V8 F/I	33-2023 ♦	HP-2010
F250	4.9L L6 F/I	33-2023 ♦	HP-3001
F250	5.0L V8 F/I	33-2023 ♦	HP-3001
F250	5.8L V8 F/I	33-2023 ♦	HP-2010
F250	7.3L V8 DSL - VIN F	E-1946 ♦	HP-6001
F250	7.3L V8 DSL - VIN K	33-2088	HP-4002
F250	7.3L V8 DSL - VIN M	E-1460	HP-4002
F250	7.5L V8 F/I	33-2023 ♦	HP-3001
F350	5.8L V8 F/I	33-2023 ♦	HP-2010
F350	7.3L V8 DSL - VIN F	E-1946 ♦	HP-6001
F350	7.3L V8 DSL - VIN K	33-2088	HP-4002
F350	7.3L V8 DSL - VIN M	E-1460	HP-4002
F350	7.5L V8 F/I	33-2023 ♦	HP-3001
F450	7.3L V8 DSL	E-1460	HP-4002
F450	7.3L V8 DSL - OEM FD4595	E-1460	FF-4595
F450	7.5L V8 F/I	33-2023	HP-3001
Falcon	3.9L V6 F/I	33-2708	HP-3001
Falcon	4.0L V6 MPI	33-2708	HP-3001
Granada	2.9L V6 F/I - 24v, Cosworth	33-2013 ♦	
		33-2664 ♦	
Maverick	2.4L L4 F/I	33-2031-2	
Mustang	3.8L V6 F/I	E-0940	HP-2009
Mustang	5.0L V8 F/I	E-0940 ♦	HP-3001

Vehicle	Engine Type	Air Filter	Oil Filter
1994 FORD			
Mustang SVT Cobra	5.0L V8 F/I	E-0940 ♦	HP-2004
Probe	2.0L L4 F/I - Non-US, from 3/94	33-2676	
Probe	2.0L L4 F/I - US	33-2049	HP-1006
Probe	2.5L V6 F/I - Non-US, from 3/94	33-2676	
Probe	2.5L V6 F/I - US	33-2049 ♦	HP-1010
Ranger	2.3L L4 F/I	33-2024	HP-3001
Ranger	3.0L V6 F/I	33-2024	HP-2009
Ranger	4.0L V6 F/I	33-2024	HP-3001
Scorpio	2.4L V6 F/I	33-2013	
Taurus	3.0L V6 F/I	33-2024	HP-2009
Taurus	3.8L V6 F/I	33-2024	HP-2009
Taurus SHO	3.0L V6 F/I	33-2040	HP-2009
Taurus SHO	3.2L V6 F/I	33-2040	HP-2009
Tempo	2.3L L4 F/I	33-2107	HP-2004
Thunderbird	3.8L V6 F/I	33-2033	HP-2009
		33-2033 ♦	HP-2009
Thunderbird	4.6L V8 F/I	33-2033 ♦	HP-2010
Transit 92	2.5L L4 DSL - Exc., 80BHP	33-2512	
1993 FORD			
Aerostar	3.0L V6 F/I	33-2024	HP-2009
Aerostar	4.0L V6 F/I	33-2024	HP-3001
Bronco	5.0L V8 F/I	33-2023 ♦	HP-3001
Bronco	5.8L V8 F/I	33-2023 ♦	HP-3001
Crown Victoria	4.6L V8 F/I	33-2272	HP-2010
E150 Econoline	4.9L L6 F/I	33-2023	HP-3001
E150 Econoline	5.0L V8 F/I	33-2023	HP-3001
E150 Econoline	5.8L V8 F/I	33-2023	HP-3001
E150 Econoline Club Wagon	4.9L L6 F/I	33-2023	HP-3001
E150 Econoline Club Wagon	5.0L V8 F/I	33-2023	HP-3001
E150 Econoline Club Wagon	5.8L V8 F/I	33-2023	HP-3001
E350 Econoline	7.3L V8 DSL	E-1461	HP-4002
E350 Econoline	7.5L V8 F/I	33-2023	HP-3001
E350 Econoline Club Wagon	7.3L V8 DSL	E-1461	HP-4002
E350 Econoline Club Wagon	7.5L V8 F/I	33-2023	HP-3001
Escort	1.8L L4 F/I	33-2034	HP-1008
Escort	1.9L L4 EFI	33-2126	HP-2009
Escort Express	1.8L L4 DSL	33-2627	
Escort GT	1.8L L4 F/I	33-2034 ♦	HP-1008
Escort VI	1.8L L4 DSL	33-2627 ♦	
Escort VI	1.8L L4 F/I	33-2627 ♦	
Escort VI	2.0L L4 F/I - 220BHP	33-2665 ♦	
Explorer	4.0L V6 F/I	33-2024	HP-3001
F150	4.9L L6 F/I	33-2023 ♦	HP-3001
F150	5.0L V8 F/I	33-2023 ♦	HP-3001
F150	5.8L V8 F/I	33-2023 ♦	HP-3001
F150 Lightning	5.8L V8 F/I	33-2023 ♦	HP-3001
F250	4.9L L6 F/I	33-2023	HP-3001
F250	5.0L V8 F/I	33-2023	HP-3001
F250	5.8L V8 F/I	33-2023 ♦	HP-3001
F250	7.3L V8 DSL		HP-4002
F250	7.3L V8 DSL - exc. Turbo	E-1460	HP-4002
F250	7.3L V8 DSL - Turbo	33-2088	HP-4002
F250	7.5L V8 F/I	33-2023 ♦	HP-3001
F350	5.8L V8 F/I	33-2023 ♦	HP-3001
F350	7.3L V8 DSL		HP-4002
F350	7.3L V8 DSL - exc. Turbo	E-1460	HP-4002
F350	7.3L V8 DSL - Turbo	33-2088	HP-4002

*Indicates 2 filters required ♦ - Intake kit available - see page 80 Applications updated daily at knfilters.com

Vehicle	Engine Type	Air Filter	Oil Filter
1993 FORD			
F350	7.5L V8 F/I	33-2023 ♦	HP-3001
F450	7.3L V8 DSL		HP-4002
F450	7.3L V8 DSL - exc. Turbo	E-1460	HP-4002
F450	7.3L V8 DSL - Turbo	33-2088	HP-4002
F450	7.5L V8 F/I	33-2023	HP-3001
Festiva	1.3L L4 F/I		HP-1004
Maverick	2.4L L4 F/I	33-2031-2	
Mustang	2.3L L4 F/I	33-2044	HP-3001
Mustang	5.0L V8 F/I	33-2015 ♦	HP-3001
Probe	2.0L L4 F/I	33-2049	HP-1006
Probe	2.5L V6 F/I	33-2049 ♦	HP-1010
Ranger	2.3L L4 F/I	33-2024	HP-3001
Ranger	3.0L V6 F/I	33-2024	HP-2009
Ranger	4.0L V6 F/I	33-2024	HP-3001
Taurus	3.0L V6 F/I	33-2024	HP-2009
Taurus	3.8L V6 F/I	33-2024	HP-2009
Taurus SHO	3.0L V6 F/I	33-2040	HP-2009
Taurus SHO	3.2L V6 F/I	33-2040	HP-2009
Tempo	2.3L L4 F/I	33-2107	HP-2004
Tempo	3.0L V6 F/I		HP-2009
Thunderbird	3.8L V6 F/I	33-2033	HP-2009
		33-2033 ♦	HP-2009
Thunderbird	5.0L V8 F/I	33-2033 ♦	HP-3001
1992 FORD			
Aerostar	3.0L V6 F/I	33-2024	HP-2009
Bronco	4.9L L6 F/I	33-2023 ♦	HP-3001
Bronco	5.0L V8 F/I	33-2023 ♦	HP-3001
Bronco	5.8L V8 F/I	33-2023 ♦	HP-3001
Crown Victoria	4.6L V8 F/I	33-2272	HP-2010
E150 Econoline	5.0L V8 F/I	33-2023	HP-3001
E150 Econoline	5.8L V8 F/I	33-2023	HP-3001
E150 Econoline Club Wagon	5.0L V8 F/I	33-2023	HP-3001
E150 Econoline Club Wagon	5.8L V8 F/I	33-2023	HP-3001
E350 Econoline	7.3L V8 DSL	E-1461	HP-4002
E350 Econoline	7.5L V8 F/I	33-2023	HP-3001
E350 Econoline Club Wagon	5.8L V8 F/I	33-2023	HP-3001
E350 Econoline Club Wagon	7.3L V8 DSL	E-1461	HP-4002
E350 Econoline Club Wagon	7.5L V8 F/I	33-2023	HP-3001
Escort	1.9L L4 EFI	33-2126	HP-2009
Escort GT	1.8L L4 F/I	33-2034 ♦	HP-1008
Explorer	4.0L V6 F/I	33-2024	HP-3001
F53	7.5L V8 F/I	33-2023	HP-3001
F150	4.9L L6 F/I	33-2023 ♦	HP-3001
F150	5.0L V8 F/I	33-2023 ♦	HP-3001
F150	5.8L V8 F/I	33-2023 ♦	HP-3001
F250	4.9L L6 F/I	33-2023	HP-3001
F250	5.0L V8 F/I	33-2023	HP-3001
F250	5.8L V8 F/I	33-2023 ♦	HP-3001
F250	7.3L V8 DSL	E-1460	HP-4002
F250	7.5L V8 F/I	33-2023 ♦	HP-3001
F350	5.8L V8 F/I	33-2023 ♦	HP-3001
F350	7.3L V8 DSL	E-1460	HP-4002
F350	7.5L V8 F/I	33-2023 ♦	HP-3001
F450	7.3L V8 DSL	E-1460	HP-4002
Festiva	1.3L L4 F/I		HP-1004
Mustang	2.3L L4 F/I	33-2044	HP-3001
Mustang	5.0L V8 F/I	33-2015 ♦	HP-3001
Probe	2.2L L4 F/I	33-2026	HP-1010
Probe	3.0L V6 F/I	33-2026	HP-2009

Vehicle	Engine Type	Air Filter	Oil Filter
1992 FORD			
Ranger	2.3L L4 F/I	33-2024	HP-3001
Ranger	2.9L V6 F/I	33-2024	HP-3001
Ranger	3.0L V6 F/I	33-2024	HP-2009
Ranger	4.0L V6 F/I	33-2024	HP-3001
Scorpio	2.9L V6 F/I - 12v	33-2013 ♦	
Sierra	2.0L L4 F/I - 220BHP	33-2532 ♦	
Sierra	2.0L L4 F/I - Exc., 220BHP	33-2013 ♦	
Sierra	2.9L V6 F/I	33-2013 ♦	
Taurus	3.0L V6 F/I	33-2024	HP-2009
Taurus	3.8L V6 F/I	33-2024	HP-2009
Taurus SHO	3.0L V6 F/I	33-2040	HP-2009
Tempo	2.3L L4 F/I	33-2107	HP-2004
Tempo	3.0L V6 F/I		HP-2009
Thunderbird	3.8L V6 F/I	33-2033	HP-2009
		33-2033 ♦	HP-2009
Thunderbird	5.0L V8 F/I	33-2033 ♦	HP-3001
1991 FORD			
Aerostar	3.0L V6 F/I	33-2024	HP-2009
Bronco	5.0L V8 F/I	33-2023 ♦	HP-3001
Bronco	5.8L V8 F/I	33-2023 ♦	HP-3001
E150 Econoline	5.0L V8 F/I	33-2023	HP-3001
E150 Econoline Club Wagon	5.0L V8 F/I	33-2023	HP-3001
E350 Econoline	7.3L V8 DSL	E-1460	HP-4002
E350 Econoline	7.5L V8 F/I	33-2023	HP-3001
E350 Econoline Club Wagon	5.8L V8 F/I	33-2023	HP-3001
E350 Econoline Club Wagon	7.3L V8 DSL	E-1460	HP-4002
E350 Econoline Club Wagon	7.5L V8 F/I	33-2023	HP-3001
Escort	1.8L L4 F/I	33-2034 ♦	HP-1008
Escort	1.9L L4 EFI	33-2126	HP-2009
Escort Express	1.8L L4 DSL	33-2627	
Escort V	1.8L L4 DSL	33-2627	
Escort V	1.8L L4 F/I	33-2627 ♦	
Explorer	4.0L V6 F/I	33-2024	HP-3001
F53	7.5L V8 F/I	33-2023	HP-3001
F150	4.9L L6 F/I	33-2023 ♦	HP-3001
F150	5.0L V8 F/I	33-2023 ♦	HP-3001
F150	5.8L V8 F/I	33-2023 ♦	HP-3001
F250	4.9L L6 F/I	33-2023 ♦	HP-3001
F250	5.0L V8 F/I	33-2023	HP-3001
F250	5.8L V8 F/I	33-2023 ♦	HP-3001
F250	7.3L V8 DSL	E-1460	HP-4002
F250	7.5L V8 F/I	33-2023 ♦	HP-3001
F350	5.8L V8 F/I	33-2023 ♦	HP-3001
F350	7.3L V8 DSL	E-1460	HP-4002
F350	7.5L V8 F/I	33-2023 ♦	HP-3001
F450	7.3L V8 DSL	E-1460	HP-4002
F450	7.5L V8 F/I	33-2023	HP-3001
Festiva	1.3L L4 F/I		HP-1004
LTD Crown Victoria	5.0L V8 F/I	33-2195	HP-3001
LTD Crown Victoria	5.8L V8 CARB	E-1290	HP-2004
Mustang	2.3L L4 F/I	33-2044	HP-3001
Mustang	5.0L V8 F/I	33-2015 ♦	HP-3001
Probe	2.2L L4 F/I	33-2026	HP-1010
Ranger	2.3L L4 F/I	33-2024	HP-3001
Ranger	2.9L V6 F/I	33-2024	HP-3001
Ranger	3.0L V6 F/I	33-2024	HP-2009
Ranger	4.0L V6 F/I	33-2024	HP-3001
Scorpio	2.9L V6 F/I - 12v	33-2013 ♦	
Sierra	2.9L V6 F/I	33-2013 ♦	
Taurus	3.0L V6 F/I	33-2024	HP-2009

*Indicates 2 filters required ♦ - Intake kit available - see page 80 Applications updated daily at knfilters.com

Vehicle	Engine Type	Air Filter	Oil Filter
1991 FORD			
Taurus SHO	3.0L V6 F/I	33-2040	HP-2009
Tempo	2.3L L4 F/I	33-2044	HP-3001
Thunderbird	3.8L V6 F/I	33-2033	HP-2009
		33-2033 ♦	HP-2009
Thunderbird	5.0L V8 F/I	33-2033 ♦	HP-3001
1990 FORD			
Bronco	4.9L L6 F/I	33-2023 ♦	HP-3001
Bronco	5.0L V8 F/I	33-2023 ♦	HP-3001
Bronco	5.8L V8 F/I	33-2023 ♦	HP-3001
Bronco II	2.9L V6 F/I	33-2024	HP-3001
E150 Econoline	5.0L V8 F/I	33-2023	HP-3001
E150 Econoline Club Wagon	5.0L V8 F/I	33-2023	HP-3001
E250 Econoline Club Wagon	5.8L V8 F/I	33-2023	HP-3001
E350 Econoline	5.8L V8 F/I	33-2023	HP-3001
E350 Econoline	7.3L V8 DSL	E-1460	HP-4002
E350 Econoline	7.5L V8 F/I	33-2023	HP-3001
E350 Econoline Club Wagon	5.8L V8 F/I	33-2023	HP-3001
E350 Econoline Club Wagon	7.3L V8 DSL	E-1460	HP-4002
E350 Econoline Club Wagon	7.5L V8 F/I	33-2023	HP-3001
Escort	1.9L L4 F/I	33-2087	HP-2009
F150	4.9L L6 F/I	33-2023 ♦	HP-3001
F150	5.0L V8 F/I	33-2023 ♦	HP-3001
F150	5.8L V8 F/I	33-2023 ♦	HP-3001
F250	4.9L L6 F/I	33-2023 ♦	HP-3001
F250	5.0L V8 F/I	33-2023	HP-3001
F250	5.8L V8 F/I	33-2023 ♦	HP-3001
F250	7.3L V8 DSL	E-1460	HP-4002
F250	7.5L V8 F/I	33-2023 ♦	HP-3001
F350	5.8L V8 F/I	33-2023 ♦	HP-3001
F350	7.3L V8 DSL	E-1460	HP-4002
F350	7.5L V8 F/I	33-2023 ♦	HP-3001
F450	7.3L V8 DSL	E-1460	HP-4002
F450	7.5L V8 F/I	33-2023	HP-3001
Falcon	4.0L V6 MPI	33-2708	HP-3001
Festiva	1.3L L4 CARB		HP-1004
Festiva	1.3L L4 F/I		HP-1004
LTD Crown Victoria	5.0L V8 F/I	33-2195	HP-3001
LTD Crown Victoria	5.8L V8 CARB	E-1290	HP-2004
Motorhome	7.5L V8 F/I - Class C	33-2023	
Mustang	2.3L L4 F/I	33-2044	HP-3001
Mustang	5.0L V8 F/I	33-2015 ♦	HP-3001
Orion III	1.4L L4 F/I	E-9091 ♦	
Probe	2.2L L4 F/I		HP-1010
Probe	2.2L L4 F/I - Cruise control	33-2024	HP-1010
Probe	2.2L L4 F/I - exc. cruise control	33-2026	HP-1010
Probe	3.0L V6 F/I	33-2026	HP-2009
Ranger	2.3L L4 F/I	33-2024	HP-3001
Ranger	2.9L V6 F/I	33-2024	HP-3001
Ranger	4.0L V6 F/I	33-2024	HP-3001
Scorpio	2.0L L4 F/I	33-2013	
Scorpio	2.4L V6 F/I	33-2013	
Scorpio	2.5L L4 DSL - 69BHP	E-3740	
Scorpio	2.5L L4 DSL - Exc., 69BHP	33-2013	
Scorpio	2.9L V6 F/I	33-2013	
Sierra	2.9L V6 F/I	33-2013 ♦	
Taurus	3.0L V6 F/I	33-2024	HP-2009
Taurus SHO	3.0L V6 F/I	33-2040	HP-2009
Tempo	2.3L L4 F/I	33-2044	HP-3001

Vehicle	Engine Type	Air Filter	Oil Filter
1990 FORD			
Thunderbird	3.8L V6 F/I	33-2033	HP-2009
1989 FORD			
Aerostar	3.0L V6 F/I	33-2024	HP-2009
Bronco	4.9L L6 F/I	33-2023 ♦	HP-3001
Bronco	5.0L V8 F/I	33-2023 ♦	HP-3001
Bronco	5.8L V8 F/I	33-2023 ♦	HP-3001
Bronco II	2.9L V6 F/I	33-2024	HP-3001
Country Squire	5.0L V8 F/I	33-2012	HP-3001
E150 Econoline	5.0L V8 F/I	33-2023	HP-3001
E150 Econoline Club Wagon	5.0L V8 F/I	33-2023	HP-3001
E350 Econoline	5.8L V8 F/I	33-2023	HP-3001
E350 Econoline	7.3L V8 DSL	E-1460	HP-4002
E350 Econoline	7.5L V8 F/I	33-2023	HP-3001
E350 Econoline Club Wagon	4.9L L6 F/I	33-2023	HP-3001
E350 Econoline Club Wagon	5.8L V8 F/I	33-2023	HP-3001
E350 Econoline Club Wagon	7.3L V8 DSL	E-1460	HP-4002
E350 Econoline Club Wagon	7.5L V8 F/I	33-2023	HP-3001
Escort GT	1.9L L4 F/I	33-2087	HP-2009
F53	7.5L V8 F/I	33-2023 ♦	HP-3001
F59	7.3L V8 DSL	E-1460	HP-4002
F150	4.9L L6 F/I	33-2023 ♦	HP-3001
F150	5.0L V8 F/I	33-2023 ♦	HP-3001
F150	5.8L V8 F/I	33-2023 ♦	HP-3001
F250	4.9L L6 F/I	33-2023 ♦	HP-3001
F250	5.0L V8 F/I	33-2023 ♦	HP-3001
F250	5.8L V8 F/I	33-2023 ♦	HP-3001
F250	7.3L V8 DSL	E-1460	HP-4002
F250	7.5L V8 F/I	33-2023 ♦	HP-3001
F350	5.8L V8 F/I	33-2023 ♦	HP-3001
F350	7.3L V8 DSL	E-1460	HP-4002
F350	7.5L V8 F/I	33-2023 ♦	HP-3001
Falcon	4.0L L6 MPI	33-2708	HP-3001
LTD Crown Victoria	5.0L V8 F/I	33-2195	HP-3001
LTD Crown Victoria	5.8L V8 CARB	E-1290	HP-2004
Motorhome	7.5L V8 F/I - Class C	33-2023	
Mustang	2.3L L4 F/I	33-2044	HP-3001
Mustang	5.0L V8 F/I	33-2015 ♦	HP-3001
Probe	2.2L L4 F/I	33-2026	HP-1010
Ranger	2.3L L4 F/I	33-2024	HP-3001
Ranger	2.9L V6 F/I	33-2024	HP-3001
Taurus	3.0L V6 F/I	33-2024	HP-2009
Taurus SHO	3.0L V6 F/I	33-2040	HP-2009
Tempo	2.3L L4 F/I	33-2044	HP-3001
Thunderbird	3.8L V6 F/I	33-2033	HP-2009
1988 FORD			
Aerostar	3.0L V6 F/I	33-2024	HP-2009
Bronco	4.9L L6 F/I	33-2023 ♦	HP-3001
Bronco	5.0L V8 F/I	33-2023 ♦	HP-3001
Bronco	5.8L V8 F/I	33-2023 ♦	HP-3001
Bronco II	2.9L V6 F/I	33-2024	HP-3001
E150 Econoline Club Wagon	5.0L V8 F/I	33-2023	HP-3001
E150 Econoline Club Wagon	5.8L V8 F/I	33-2023	HP-3001
E350 Econoline	7.5L V8 F/I	33-2023	HP-3001
E350 Econoline Club Wagon	5.8L V8 F/I	33-2023	HP-3001
E350 Econoline Club Wagon	7.3L V8 DSL	E-1460	HP-4002

*Indicates 2 filters required ♦ - Intake kit available - see page 80 Applications updated daily at knfilters.com

Vehicle	Engine Type	Air Filter	Oil Filter
1988 FORD			
E350 Econoline Club Wagon	7.5L V8 F/I	33-2023	HP-3001
Escort	1.9L L4 F/I	33-2087	HP-2009
Escort Express	1.6L L4 DSL	33-2514	
Escort IV	1.6L L4 CARB	E-9090	
Escort IV	1.6L L4 DSL	33-2514	
Escort IV	1.6L L4 F/I - 102BHP	33-2595 ♦	
Escort IV	1.6L L4 F/I - Exc., 102BHP	33-2001 ♦	
F Super Duty	7.3L V8 DSL	E-1460	HP-4002
F150	4.9L L6 F/I	33-2023 ♦	HP-3001
F150	5.0L V8 F/I	33-2023 ♦	HP-3001
F150	5.8L V8 F/I	33-2023 ♦	HP-3001
F250	4.9L L6 F/I	33-2023 ♦	HP-3001
F250	5.0L V8 F/I	33-2023 ♦	HP-3001
F250	5.8L V8 F/I	33-2023 ♦	HP-3001
F250	7.3L V8 DSL	E-1460	HP-4002
F250	7.5L V8 F/I	33-2023 ♦	HP-3001
F350	7.3L V8 DSL	E-1460	HP-4002
F350	7.5L V8 F/I	33-2023 ♦	HP-3001
LTD Crown Victoria	5.0L V8 F/I	33-2195	HP-3001
Mustang	2.3L L4 F/I	33-2044	HP-3001
Mustang	5.0L V8 F/I	33-2015 ♦	HP-3001
P-100	1.8L L4 DSL	33-2013	
Ranger	2.0L L4 CARB	E-1088	HP-3001
Ranger	2.3L L4 F/I	33-2002	HP-3001
Ranger	2.9L V6 F/I	33-2024	HP-3001
Thunderbird	2.3L L4 F/I	E-1931	HP-2004
Thunderbird	3.8L V6 F/I	33-2015	HP-2009
Thunderbird	5.0L V8 F/I	33-2015	HP-3001
1987 FORD			
Bronco	4.9L L6 F/I	33-2023	HP-3001
Bronco	5.0L V8 F/I	33-2023	HP-3001
Bronco	5.8L V8 CARB	E-1570	HP-3001
Bronco II	2.9L V6 F/I	33-2002	HP-3001
E150 Econoline Club Wagon	5.0L V8 F/I	33-2023	HP-3001
E350 Econoline	7.5L V8 CARB	E-1570	HP-3001
E350 Econoline	7.5L V8 F/I	33-2023	HP-3001
E350 Econoline Club Wagon	7.5L V8 CARB	E-1570	HP-3001
Escort	1.9L L4 F/I	33-2087	HP-2009
EXP	1.9L L4 F/I	33-2002	HP-2009
F150	4.9L L6 F/I	33-2023	HP-3001
F150	5.0L V8 F/I	33-2023	HP-3001
F150	5.8L V8 CARB	E-1570	HP-3001
F250	4.9L L6 F/I	33-2023	HP-3001
F250	5.0L V8 F/I	33-2023	HP-3001
F250	5.8L V8 CARB	E-1570	HP-3001
F250	6.9L V8 DSL	E-1460	HP-4002
F250	7.5L V8 CARB	E-1570	HP-3001
F350	5.8L V8 CARB	E-1570	HP-3001
F350	6.9L V8 DSL	E-1460	HP-4002
F350	7.5L V8 CARB	E-1570	HP-3001
LTD Crown Victoria	5.0L V8 F/I	33-2195	HP-3001
Mustang	2.3L L4 F/I	33-2044	HP-3001
Mustang	5.0L V8 F/I	33-2015 ♦	HP-3001
Ranger	2.0L L4 CARB	E-1088	HP-3001
Ranger	2.3L L4 F/I	33-2002	HP-3001
Ranger	2.9L V6 F/I	33-2002	HP-3001
Sierra	2.0L L4 F/I - 204BHP	33-2532 ♦	
Sierra	2.0L L4 F/I - Exc., 204BHP	33-2013 ♦	
Sierra	2.8L V6 F/I	33-2510	
Thunderbird	2.3L L4 F/I	E-1931	HP-2004
1987 FORD			
Thunderbird	5.0L V8 F/I	33-2015	HP-3001
1986 FORD			
Bronco	4.9L L6 CARB	E-1350	HP-3001
Bronco	5.0L V8 F/I	33-2012	HP-3001
Bronco	5.8L V8 CARB	E-1570	HP-3001
Bronco II	2.9L V6 F/I	33-2002	HP-3001
E150 Econoline	5.0L V8 F/I	33-2012	HP-3001
E150 Econoline Club Wagon	5.0L V8 F/I	33-2012	HP-3001
E250 Econoline	4.9L L6 CARB	E-1040	HP-3001
E250 Econoline Club Wagon	4.9L L6 CARB	E-1040	HP-3001
E350 Econoline	6.9L V8 DSL	E-1460	HP-4002
E350 Econoline	7.5L V8 CARB	E-1570	HP-3001
E350 Econoline Club Wagon	5.8L V8 CARB	E-1570	HP-3001
E350 Econoline Club Wagon	6.9L V8 DSL	E-1460	HP-4002
E350 Econoline Club Wagon	7.5L V8 CARB	E-1570	HP-3001
Escort	1.9L L4 CARB	E-1958	HP-2009
Escort	1.9L L4 F/I	33-2087	HP-2009
EXP	1.9L L4 CARB	E-1958	HP-2009
EXP	1.9L L4 F/I	33-2002	HP-2009
F150	4.9L L6 CARB	E-1350	HP-3001
F150	5.0L V8 F/I	33-2012	HP-3001
F150	5.8L V8 CARB	E-1570	HP-3001
F250	5.0L V8 F/I	33-2012	HP-3001
F250	5.8L V8 CARB	E-1570	HP-3001
F250	6.9L V8 DSL	E-1460	HP-4002
F250	7.5L V8 CARB	E-1570	HP-3001
F350	6.9L V8 DSL	E-1460	HP-4002
F350	7.5L V8 CARB	E-1570	HP-3001
Granada	2.8L V6 EFI - 4WD	33-2013	
Granada	2.9L V6 F/I - 4WD	33-2013	
LTD	5.0L V8 F/I	33-2195	HP-3001
Mustang	2.3L L4 CARB	E-1200	HP-3001
Mustang	2.3L L4 F/I	E-1931	HP-2004
Mustang	3.8L V6 F/I	E-1325	HP-3001
Mustang	5.0L V8 F/I	33-2015 ♦	HP-3001
Ranger	2.0L L4 CARB	E-1088	HP-3001
Ranger	2.3L L4 F/I	33-2002	HP-3001
Ranger	2.9L V6 F/I	33-2002	HP-3001
Sierra	2.0L L4 F/I	33-2013	
Sierra	2.8L V6 F/I	33-2510	
Thunderbird	2.3L L4 F/I	E-1931	HP-2004
Thunderbird	5.0L V8 F/I	33-2015	HP-3001
1985 FORD			
Bronco	4.9L L6 CARB	E-1350	HP-3001
Bronco	5.0L V8 F/I	33-2012	HP-3001
Bronco	5.8L V8 2 BBL.	E-1290	HP-3001
Bronco	5.8L V8 4 BBL.	E-1570	HP-3001
Bronco II	2.8L V6 CARB	E-1280	HP-3001
E350 Econoline	7.5L V8 CARB	E-1570	HP-3001
E350 Econoline Club Wagon	7.5L V8 CARB	E-1570	HP-3001
Escort	1.6L L4 CARB	E-1958	
F150	4.9L L6 CARB	E-1350	HP-3001
F150	5.0L V8 CARB	E-1290	HP-3001
F150	5.0L V8 F/I	33-2012	HP-3001
F150	5.8L V8 2 BBL.	E-1290	HP-3001
F150	5.8L V8 4 BBL.	E-1570	HP-3001
F250	4.9L L6 CARB	E-1350	HP-3001
F250	5.0L V8 CARB	E-1290	HP-3001

*Indicates 2 filters required ♦ - Intake kit available - see page 80 Applications updated daily at knfilters.com

AIR & OIL FILTERS

Vehicle	Engine Type	Air Filter	Oil Filter
1985 FORD			
F250	5.0L V8 F/I	33-2012	HP-3001
F250	5.8L V8 2 BBL.	E-1290	HP-3001
F250	5.8L V8 4 BBL.	E-1570	HP-3001
F250	6.9L V8 DSL	E-1460	HP-4002
F250	7.5L V8 CARB	E-1570	HP-3001
F350	6.9L V8 DSL	E-1460	HP-4002
F350	7.5L V8 CARB	E-1570	HP-3001
Granada	2.8L V6 F/I	33-2013	
LTD	5.0L V8 CARB	E-1570	
LTD	5.0L V8 F/I	E-1290	HP-3001
Mustang	2.3L L4 CARB	E-1200	HP-3001
Mustang	2.3L L4 F/I	E-1931	HP-2004
Mustang	3.8L V6 F/I	E-1325	HP-3001
Mustang	5.0L V8 CARB	E-1535	HP-3001
Ranger	2.0L L4 CARB	E-1088	HP-3001
Ranger	2.3L L4 F/I	33-2002	HP-3001
Ranger	2.8L V6 CARB	E-1280	HP-3001
Scorpio	2.8L V6 F/I	33-2013	
Sierra	2.8L V6 F/I	33-2510	
Thunderbird	2.3L L4 F/I	E-1931	HP-2004
1984 FORD			
Bronco	5.0L V8 CARB	E-1290	HP-3001
Bronco	5.8L V8 2 BBL.	E-1290	HP-3001
Bronco	5.8L V8 4 BBL.	E-1570	HP-3001
Bronco II	2.8L V6 CARB	E-1280	HP-3001
E350 Econoline	7.5L V8 CARB	E-1570	HP-3001
E350 Econoline Club Wagon	7.5L V8 CARB	E-1570	HP-3001
Escort	1.6L L4 CARB	E-1958	HP-2009
F150	4.9L L6 CARB	E-1350	HP-3001
F150	5.0L V8 CARB	E-1290	HP-3001
F150	5.8L V8 CARB	E-1290	HP-3001
F150	6.9L V8 DSL	E-1460	HP-4002
F250	5.8L V8 2 BBL.	E-1290	HP-3001
F250	5.8L V8 4 BBL.	E-1570	HP-3001
F250	6.9L V8 DSL	E-1460	HP-4002
F250	7.5L V8 CARB	E-1570	HP-3001
F350	6.9L V8 DSL	E-1460	HP-4002
F350	7.5L V8 CARB	E-1570	HP-3001
Mustang	2.3L L4 CARB	E-1200	HP-3001
Mustang	2.3L L4 F/I	E-1931	HP-2004
Mustang	3.8L V6 F/I	E-1325	HP-3001
Mustang	5.0L V8 CARB	E-1535	HP-2004
Mustang	5.0L V8 F/I	E-1535	HP-3001
Ranger	2.3L L4 CARB	E-1088	HP-3001
Ranger	2.8L V6 CARB	E-1280	HP-3001
Thunderbird	2.3L L4 F/I	E-1931	HP-2004
Thunderbird	5.0L V8 F/I	E-1290	HP-3001
1983 FORD			
Bronco	4.9L L6 CARB	E-1350	HP-3001
Bronco	5.0L V8 CARB	E-1290	HP-3001
E350 Econoline Club Wagon	7.5L V8 CARB	E-1570	HP-3001
F100	4.9L L6 CARB	E-1350	HP-3001
F100	5.0L V8 CARB	E-1290	HP-3001
F150	4.9L L6 CARB	E-1350	HP-3001
F150	5.0L V8 CARB	E-1290	HP-3001
F150	5.8L V8 CARB	E-1290	HP-3001
F250	5.8L V8 CARB	E-1290	HP-3001
F250	6.9L V8 DSL	E-1460	HP-4002
F250	7.5L V8 CARB	E-1570	HP-3001
Mustang	2.3L L4 CARB	E-1200	HP-3001
Mustang	2.3L L4 F/I	E-1931	HP-2004
1983 FORD			
Mustang	3.8L V6 CARB	E-1325	HP-3001
Mustang	5.0L V8 CARB	E-1535	HP-3001
Ranger	2.2L L4 DSL	E-0990	HP-2007
Ranger	2.3L L4 CARB	E-1088	HP-3001
Ranger	2.8L V6 CARB	E-1280	HP-3001
Sierra	2.8L V6 F/I	33-2510	
1982 FORD			
Bronco	5.8L V8 CARB	E-1290	HP-3001
Escort	1.6L L4 CARB	E-1958	HP-2009
Escort III	1.6L L4 CARB - 79BHP	E-1280	
Escort III	1.6L L4 CARB - 97BHP	E-9090	
Escort III	1.6L L4 F/I	33-2001	
F100	3.8L V6 CARB	E-1325	HP-3001
F100	4.9L L6 CARB	E-1350	HP-3001
F150	4.9L L6 CARB	E-1350	HP-3001
F150	5.0L V8 CARB	E-1290	HP-3001
F150	5.8L V8 CARB	E-1290	HP-3001
F250	5.8L V8 CARB	E-1290	HP-3001
F250	6.6L V8 CARB	E-1290	HP-3001
F350	6.6L V8 CARB	E-1290	HP-3001
Mustang	5.0L V8 CARB	E-1290	HP-3001
1981 FORD			
Bronco	5.8L V8 CARB	E-1290	HP-3001
Escort	1.6L L4 CARB	E-1958	HP-2009
F100	4.9L L6 CARB	E-1040	HP-3001
F150	4.9L L6 CARB	E-1040	HP-3001
F150	5.0L V8 CARB	E-1290	HP-3001
Granada	4.2L V8 CARB	E-1180	HP-3001
Mustang	2.3L L4 CARB - exc. Turbo	E-1200	HP-3001
Mustang	2.3L L4 CARB - Turbo	E-1200	HP-2004
1980 FORD			
Bronco	351 V8 CARB	E-1290	HP-3001
F100	300 L6 CARB	E-1040	HP-3001
F100	302 V8 CARB	E-1290	HP-3001
F150	300 L6 CARB	E-1040	HP-3001
F150	302 V8 CARB	E-1290	HP-3001
F150	351 V8 CARB	E-1290	HP-3001
F250	351 V8 CARB	E-1290	HP-3001
Fiesta	1.6L L4 CARB	E-1280	HP-2009
Granada	2.8L V6 F/I	33-2013	
Mustang	200 L6 CARB	E-1350	HP-3001
Mustang	255 V8 CARB	E-1180	HP-3001
Pinto	140 L4 CARB	E-1200	HP-3001
Taunus	2.0L V6 CARB	E-4790	
1979 FORD			
Bronco	351 V8 CARB	E-1290	HP-3001
Bronco	400 V8 CARB	E-1290	HP-3001
F100	300 L6 CARB	E-1040	HP-3001
F100	302 V8 CARB	E-1290	HP-3001
F100	351 V8 CARB	E-1290	HP-3001
F150	300 L6 CARB	E-1040	HP-3001
F150	302 V8 CARB	E-1290	HP-3001
F150	351 V8 CARB	E-1290	HP-3001
F150	400 V8 CARB	E-1290	HP-3001
F150	460 V8 CARB	E-1570	HP-3001
F250	300 L6 CARB	E-1040	HP-3001
F250	351 V8 CARB	E-1290	HP-3001
F250	400 V8 CARB	E-1290	HP-3001
F250	460 V8 CARB	E-1570	HP-3001
F350	400 V8 CARB	E-1290	HP-3001
F350	460 V8 CARB	E-1570	HP-3001

*Indicates 2 filters required ♦ - Intake kit available - see page 80 Applications updated daily at knfilters.com

Partial Listing - Complete List of Vehicles and Applications at knfilters.com

Vehicle	Engine Type	Air Filter	Oil Filter
1979 FORD			
Fairmont	302 V8 CARB - Long Filter		HP-3001
Granada	2.8L V6 F/I	33-2013	
LTD II	351 V8 CARB	E-1290	HP-3001
Mustang	140 L4 CARB		HP-3001
Mustang	302 V8 CARB	E-1180	HP-3001
Pinto	140 L4 CARB	E-1200	HP-3001
Ranchero	351 V8 CARB	E-1290	HP-3001
1978 FORD			
Bronco	351 V8 CARB	E-1290	HP-3001
Bronco	400 V8 CARB	E-1290	HP-3001
Cortina	2.3L V6 CARB	E-4790	
E350 Econoline Club Wagon	460 V8 CARB	E-1570	HP-3001
F100	300 L6 CARB	E-1040	HP-3001
F100	302 V8 CARB	E-1290	HP-3001
F100	351 V8 CARB	E-1290	HP-3001
F150	300 L6 CARB	E-1040	HP-3001
F150	302 V8 CARB	E-1290	HP-3001
F150	351 V8 CARB	E-1290	HP-3001
F150	400 V8 CARB	E-1290	HP-3001
F150	460 V8 CARB	E-1570	HP-3001
F250	351 V8 CARB	E-1290	HP-3001
F250	400 V8 CARB	E-1290	HP-3001
F250	460 V8 CARB	E-1570	HP-3001
F350	460 V8 CARB	E-1570	HP-3001
Mustang II	140 L4 CARB		HP-3001
Mustang II	171 V6 CARB		HP-2004
Mustang II	302 V8 CARB	E-1180	HP-2004
Pinto	140 L4 CARB		HP-3001
Thunderbird	351 V8 CARB	E-1290	HP-3001
1977 FORD			
Bronco	302 V8 CARB	E-1040	HP-3001
F100	300 L6 CARB	E-1040	HP-3001
F100	302 V8 CARB	E-1290	HP-3001
F100	351 V8 CARB	E-1290	HP-3001
F150	300 L6 CARB	E-1200	HP-3001
F150	302 V8 CARB	E-1290	HP-3001
F150	351 V8 CARB	E-1290	HP-3001
F150	400 V8 CARB	E-1290	HP-3001
F150	460 V8 CARB	E-1570	HP-3001
F250	351 V8 CARB	E-1290	HP-3001
F250	400 V8 CARB	E-1290	HP-3001
F250	460 V8 CARB	E-1570	HP-3001
Mustang II	302 V8 CARB	E-1180	
Mustang II	302 V8 CARB - Long Filter	E-1180	HP-3001
Mustang II	302 V8 CARB - short filter	E-1180	HP-2004
Thunderbird	302 V8 CARB	E-1180	HP-3001
1976 FORD			
Bronco	302 V8 CARB	E-1040	HP-3001
E250 Econoline	460 V8 CARB	E-1570	HP-3001
E250 Econoline Club Wagon	460 V8 CARB	E-1570	HP-3001
F100	300 L6 CARB	E-1200	HP-3001
F100	302 V8 CARB	E-1290	HP-3001
F100	360 V8 CARB	E-1570	HP-3001
F100	390 V8 CARB	E-1570	HP-3001
F150	300 L6 CARB	E-1200	HP-3001
F150	360 V8 CARB	E-1570	HP-3001
F150	390 V8 CARB	E-1570	HP-3001
F150	460 V8 CARB	E-1570	HP-3001
F250	300 L6 CARB	E-1200	HP-3001
F250	360 V8 CARB	E-1570	HP-3001
F250	390 V8 CARB	E-1570	HP-3001
F250	460 V8 CARB	E-1570	HP-3001
F350	390 V8 CARB	E-1570	HP-3001
LTD	460 V8 CARB - VIN A	E-1580	HP-3001
LTD	460 V8 CARB - VIN C	E-1570	HP-3001
Mustang II	140 L4 CARB		HP-3001
Mustang II	171 V6 CARB		HP-2004
Mustang II	302 V8 CARB	E-1550	
Mustang II	302 V8 CARB - Long Filter	E-1550	HP-3001
Mustang II	302 V8 CARB - short filter	E-1550	HP-2004
Pinto	140 L4 CARB		HP-3001
Ranchero	400 V8 CARB	E-1300	HP-3001
Thunderbird	460 V8 CARB	E-1580	HP-3001
Torino	351 V8 CARB	E-1300	HP-3001
1975 FORD			
Bronco	302 V8 CARB	E-1040	HP-3001
Courier	110 L4 CARB	E-2890	
F100	300 L6 CARB	E-1200	HP-3001
F100	360 V8 CARB	E-1570	HP-3001
F100	390 V8 CARB	E-1570	HP-3001
F150	300 L6 CARB	E-1200	HP-3001
F150	302 V8 CARB	E-1290	HP-3001
F150	360 V8 CARB	E-1570	HP-3001
F150	390 V8 CARB	E-1570	HP-3001
F250	360 V8 CARB	E-1570	HP-3001
F250	390 V8 CARB	E-1570	HP-3001
Falcon	302 V8 CARB	E-1570	HP-3001
Gran Torino	351 V8 CARB	E-1580	HP-3001
LTD	400 V8 CARB	E-1580	HP-3001
Mustang II	302 V8 CARB	E-1550	
Mustang II	302 V8 CARB - Long Filter	E-1550	HP-3001
Mustang II	302 V8 CARB - short filter	E-1550	HP-2004
Pinto	140 L4 CARB	E-1200	HP-3001
1974 FORD			
Bronco	302 V8 CARB	E-1040	
Bronco	302 V8 CARB - exc. cart. type	E-1040	HP-3001
Capri	2.3L V6 CARB	E-4790	
Capri	2.6L V6 CARB	E-4790	
Capri	3.0L V6 CARB	E-2640	
Capri II	2.3L V6 CARB	E-4790	
Courier	110 L4 CARB	E-2890	
F100 Pickup	302 V8 CARB	E-1290	HP-3001
F100 Pickup	360 V8 CARB	E-1570	HP-3001
F250 Pickup	360 V8 CARB	E-1570	HP-3001
F250 Pickup	390 V8 CARB	E-1570	HP-3001
F250 Pickup	460 V8 CARB	E-1570	HP-3001
F350 Pickup	460 V8 CARB	E-1570	HP-3001
Gran Torino	351 V8 CARB		HP-3001
Pinto	122 L4 CARB	E-1200	HP-3001
Pinto	140 L4 CARB	E-1200	HP-3001
Ranchero	351 V8 4 BBL.	E-1580	HP-3001
Torino	351 V8 2 BBL.	E-1300	HP-3001
Torino	351 V8 4 BBL.		HP-3001
Torino	351 V8 4 BBL. - exc. Police Package	E-1580	HP-3001
Torino	351 V8 4 BBL. - Police Package	E-1570	HP-3001
1973 FORD			
Bronco	302 V8 CARB	E-1040	

Vehicle	Engine Type	Air Filter	Oil Filter
1973 FORD			
Bronco	302 V8 CARB - exc. cart. type	E-1040	HP-3001
Capri	1.6L L4 CARB - 88BHP	33-2509	
Courier	110 L4 CARB	E-2890	
F100 Pickup	302 V8 CARB	E-1290	HP-3001
F100 Pickup	360 V8 CARB	E-1570	HP-3001
F100 Pickup	390 V8 CARB	E-1570	HP-3001
F250 Pickup	390 V8 CARB	E-1570	HP-3001
F350 Pickup	460 V8 CARB	E-1570	HP-3001
Gran Torino	351 V8 CARB		HP-3001
Maverick	302 V8 CARB	E-1300	HP-3001
Mustang	302 V8 CARB	E-1325	HP-3001
Mustang	351 V8 CARB		HP-3001
Mustang	351 V8 CARB - exc. Police Package	E-1580	HP-3001
Mustang	351 V8 CARB - Police Package	E-1570	HP-3001
Pinto	122 L4 CARB	E-1210	HP-3001
Ranchero	351 V8 4 BBL.	E-1580	HP-3001
Ranchero	429 V8 CARB	E-1580	HP-3001
1972 FORD			
Bronco	302 V8 CARB	E-1040	
Bronco	302 V8 CARB - exc. cart. type	E-1040	HP-3001
Capri	3.0L V6 CARB	E-2640	
Courier	110 L4 CARB	E-2890	
F100 Pickup	302 V8 CARB	E-1570	HP-3001
F100 Pickup	360 V8 CARB	E-1570	HP-3001
F100 Pickup	390 V8 CARB	E-1570	HP-3001
F250 Pickup	360 V8 CARB	E-1570	HP-3001
F250 Pickup	390 V8 CARB	E-1570	HP-3001
Gran Torino	351 V8 CARB		HP-3001
LTD	400 V8 CARB	E-1570	HP-3001
Maverick	302 V8 CARB	E-1300	HP-3001
Mustang	302 V8 CARB	E-1300	HP-3001
Mustang	351 V8 CARB		HP-3001
Mustang	351 V8 CARB - w/o ram air	E-1300	HP-3001
Mustang	351 V8 CARB - w/ram air	E-1570	HP-3001
Pinto	122 L4 CARB	E-1210	HP-3001
Pinto	98 L4 CARB	E-1050	HP-2009
Ranchero	351 V8 2 BBL.	E-1300	HP-3001
Ranchero	351 V8 4 BBL.		HP-3001
Ranchero	351 V8 4 BBL. - w/o ram air	E-1570	HP-3001
Ranchero	351 V8 4 BBL. - w/ram air	E-1560	HP-3001
Thunderbird	429 V8 CARB	E-1570	HP-3001
Torino	351 V8 2 BBL.	E-1300	HP-3001
Torino	351 V8 4 BBL.		HP-3001
Torino	351 V8 4 BBL. - w/o ram air	E-1570	HP-3001
Torino	351 V8 4 BBL. - w/ram air	E-1560	HP-3001
1971 FORD			
Bronco	170 L6 CARB	E-1200	HP-3001
Bronco	302 V8 CARB	E-1040	
Bronco	302 V8 CARB - exc. cart. type	E-1040	HP-3001
F100 Pickup	302 V8 CARB	E-1570	HP-3001
F100 Pickup	360 V8 CARB	E-1570	HP-3001
F250 Pickup	360 V8 CARB	E-1570	HP-3001
F250 Pickup	390 V8 CARB	E-1570	HP-3001
Galaxie 500	351 V8 CARB	E-1570	HP-3001
Mustang	302 V8 CARB		HP-3001
Mustang	302 V8 CARB - w/o ram air	E-1560	HP-3001
Mustang	302 V8 CARB - w/ram air	E-1570	HP-3001
Mustang	351 V8 2 BBL.	E-1570	HP-3001
Mustang	351 V8 4 BBL.	E-1560	HP-3001
Mustang	429 V8 CARB		HP-3001
Mustang	429 V8 CARB - SCJ, w/o ram air, GPD Carb.	E-1560	HP-3001
Mustang	429 V8 CARB - w/ram air, w/ Rochester Carb.	E-1570	HP-3001
Pinto	122 L4 CARB	E-1210	HP-3001
Pinto	98 L4 CARB	E-1050	HP-2009
Ranchero	351 V8 CARB	E-1570	HP-3001
Thunderbird	429 V8 CARB	E-1570	HP-3001
Torino	351 V8 CARB	E-1570	HP-3001
1970 FORD			
Bronco	302 V8 CARB	E-1040	
Bronco	302 V8 CARB - exc. cart. type	E-1040	HP-3001
F100 Pickup	300 L6 CARB	E-1200	HP-3001
F100 Pickup	302 V8 CARB	E-1570	HP-3001
F100 Pickup	360 V8 CARB	E-1570	HP-3001
F100 Pickup	390 V8 CARB	E-1570	HP-3001
F250 Pickup	360 V8 CARB	E-1570	HP-3001
F250 Pickup	390 V8 CARB	E-1570	HP-3001
Galaxie 500	390 V8 CARB	E-1570	HP-3001
Galaxie 500	429 V8 CARB	E-1570	HP-3001
Maverick	200 L6 CARB	E-1200	HP-3001
Mustang	200 L6 CARB	E-1200	HP-3001
Mustang	250 L6 CARB	E-1350	HP-3001
Mustang	302 V8 2 BBL.	E-1570	HP-3001
Mustang	302 V8 4 BBL.	E-1560	HP-3001
Mustang	351 V8 CARB		HP-3001
Mustang	351 V8 CARB - w/o ram air	E-1570	HP-3001
Mustang	351 V8 CARB - w/ram air	E-1580	HP-3001
Mustang	428 V8 CARB	E-1560	HP-3001
Mustang	429 V8 CARB	E-1560	HP-3001
Thunderbird	429 V8 CARB	E-1570	HP-3001
Torino	302 V8 CARB	E-1570	HP-3001
Torino	351 V8 CARB		HP-3001
Torino	351 V8 CARB - w/o ram air	E-1570	HP-3001
Torino	351 V8 CARB - w/ram air	E-1580	HP-3001
Torino	429 V8 CARB - VIN C	E-1560	HP-3001
Torino	429 V8 CARB - VIN J	E-1570	HP-3001
Torino	429 V8 CARB - VIN N	E-1580	HP-3001
1969 FORD			
Bronco	170 L6 CARB	E-1200	HP-3001
Bronco	302 V8 CARB	E-1040	
Bronco	302 V8 CARB - exc. cart. type	E-1040	HP-3001
F100 Pickup	300 L6 CARB	E-1030	HP-3001
F100 Pickup	302 V8 CARB	E-1040	HP-3001
F100 Pickup	360 V8 CARB	E-1570	HP-3001
F100 Pickup	390 V8 CARB	E-1570	HP-3001
F250 Pickup	360 V8 CARB	E-1570	HP-3001
F250 Pickup	390 V8 CARB		HP-3001
F250 Pickup	390 V8 CARB - w/ Rochester Carb.	E-1570	HP-3001
F250 Pickup	390 V8 CARB - w/GPD Carb.	E-1560	HP-3001
Fairlane	302 V8 CARB	E-1570	HP-3001
Falcon	302 V8 CARB	E-1570	HP-3001
Falcon	302 V8 CARB - Cleveland, Australian	E-2740	HP-3001

Vehicle	Engine Type	Air Filter	Oil Filter
1969 FORD			
Falcon	302 V8 CARB - Windsor, Australian	E-1040	HP-3001
Galaxie 500	351 V8 CARB	E-1570	HP-3001
Galaxie 500	390 V8 CARB	E-1570	HP-3001
Galaxie 500	429 V8 CARB	E-1570	HP-3001
Mustang	200 L6 CARB	E-1030	HP-3001
Mustang	250 L6 CARB	E-1350	HP-3001
Mustang	302 V8 CARB	E-1570	HP-3001
Mustang	351 V8 CARB	E-1570	HP-3001
Mustang	390 V8 CARB	E-1570	HP-3001
Mustang	428 V8 CARB	E-1560	HP-3001
Mustang	429 V8 CARB	E-1560	HP-3001
Thunderbird	429 V8 CARB	E-1570	HP-3001
Torino	302 V8 CARB	E-1570	HP-3001
Torino	351 V8 CARB	E-1570	HP-3001
Torino	428 V8 CARB	E-1560	HP-3001
1968 FORD			
Bronco	289 V8 CARB	E-1040	
Bronco	289 V8 CARB - exc. cart. type	E-1040	HP-3001
Bronco	302 V8 CARB	E-1040	
Bronco	302 V8 CARB - exc. cart. type	E-1040	HP-3001
F100 Pickup	300 L6 CARB	E-1030	HP-3001
F100 Pickup	360 V8 CARB	E-1570	HP-3001
F100 Pickup	390 V8 CARB	E-1570	HP-3001
F250 Pickup	360 V8 CARB	E-1570	HP-3001
F250 Pickup	390 V8 CARB	E-1570	HP-3001
Fairlane	302 V8 CARB	E-1570	HP-3001
Galaxie 500	390 V8 CARB	E-1570	HP-3001
Galaxie 500	428 V8 CARB	E-1560	HP-3001
Mustang	200 L6 CARB	E-1030	HP-3001
Mustang	289 V8 CARB	E-1570	HP-3001
Mustang	302 V8 CARB	E-1570	HP-3001
Mustang	390 V8 CARB	E-1570	HP-3001
Mustang	427 V8 CARB	E-1560	HP-3001
Mustang	428 V8 CARB	E-1560	HP-3001
Thunderbird	429 V8 CARB	E-1570	HP-3001
1967 FORD			
Bronco	289 V8 CARB	E-1040	HP-3001
Cortina	1.3L L4 CARB	E-2330	
Cortina	1.3L L4 CARB - GT	E-2490	
Cortina Mk2	1.3L L4 CARB	E-2473	
F100 Pickup	240 L6 CARB	E-1080	
F100 Pickup	240 L6 CARB - exc. cart. type	E-1080	HP-3001
F100 Pickup	300 L6 CARB	E-1040	
F100 Pickup	300 L6 CARB - exc. cart. type	E-1040	HP-3001
F100 Pickup	352 V8 CARB	E-1110	
F100 Pickup	352 V8 CARB - 2WD	E-1110	HP-3001
F250 Pickup	240 L6 CARB	E-1080	
F250 Pickup	240 L6 CARB - exc. cart. type	E-1080	HP-3001
F250 Pickup	352 V8 CARB	E-1110	
F250 Pickup	352 V8 CARB - 2WD	E-1110	HP-3001
Fairlane	289 V8 CARB	E-1040	HP-3001
Fairlane	390 V8 CARB	E-1090	HP-3001
Fairlane	427 V8 CARB	E-1960	HP-3001
Galaxie	390 V8 CARB	E-1090	HP-3001
Galaxie	427 V8 CARB	E-1560	HP-3001
Galaxie 500	289 V8 CARB	E-1040	HP-3001
Galaxie 500	390 V8 CARB	E-1090	HP-3001
Galaxie 500	427 V8 CARB	E-1560	HP-3001
Mustang	200 L6 CARB	E-1080	HP-3001
Mustang	289 V8 CARB	E-1040	HP-3001
Mustang	390 V8 CARB	E-1560	HP-3001
Ranchero	289 V8 CARB	E-1040	HP-3001
1966 FORD			
Bronco	170 L6 CARB	E-1080	HP-3001
Cortina GT	1.5L L4 CARB	E-2640	
F100 Pickup	240 L6 CARB	E-1080	
F100 Pickup	240 L6 CARB - exc. cart. type	E-1080	HP-3001
F100 Pickup	300 L6 CARB	E-1040	
F100 Pickup	300 L6 CARB - exc. cart. type	E-1040	HP-3001
F100 Pickup	352 V8 CARB	E-1110	
F100 Pickup	352 V8 CARB - exc. cart. type	E-1110	HP-3001
F250 Pickup	300 L6 CARB	E-1040	
F250 Pickup	300 L6 CARB - exc. cart. type	E-1040	HP-3001
F250 Pickup	352 V8 CARB	E-1110	
F250 Pickup	352 V8 CARB - exc. cart. type	E-1110	HP-3001
Fairlane	289 V8 CARB	E-1040	HP-3001
Fairlane	390 V8 CARB	E-1090	HP-3001
Fairlane	427 V8 CARB	E-1960	HP-3001
Galaxie 500	289 V8 CARB	E-1040	HP-3001
Galaxie 500	352 V8 CARB	E-1090	HP-3001
Galaxie 500	390 V8 CARB	E-1090	HP-3001
Galaxie 500	427 V8 CARB	E-1560	HP-3001
Mustang	200 L6 CARB	E-1080	HP-3001
Mustang	289 V8 CARB	E-1090	HP-3001
Ranchero	289 V8 CARB	E-1040	HP-3001
Thunderbird	390 V8 CARB	E-1090	HP-3001
1965 FORD			
Cortina GT	1.5L L4 CARB	E-2640	
F100 Pickup	300 L6 CARB	E-1040	
F100 Pickup	300 L6 CARB - Spin On	E-1040	HP-3001
F100 Pickup	352 V8 CARB	E-1110	
F100 Pickup	352 V8 CARB - Spin On	E-1110	HP-3001
Fairlane	289 V8 2 BBL.	E-1040	HP-3001
Fairlane	289 V8 4 BBL.	E-1560	HP-3001
Falcon	289 V8 2 BBL.	E-2865	HP-3001
Falcon	289 V8 4 BBL.	E-1040	HP-3001
Falcon Sedan Delivery	289 V8 2 BBL.	E-2865	HP-3001
Falcon Sedan Delivery	289 V8 4 BBL.	E-1040	HP-3001
Galaxie	427 V8 CARB	E-1960	HP-3001
Galaxie 500	352 V8 CARB	E-1090	HP-3001
Galaxie 500	390 V8 CARB	E-1090	HP-3001
Galaxie 500	427 V8 CARB	E-1960	HP-3001
Mustang	170 L6 CARB	E-1080	HP-3001
Mustang	200 L6 CARB	E-1080	HP-3001
Mustang	289 V8 CARB		HP-3001
Mustang	289 V8 CARB - exc. Hi Perf.	E-1090	HP-3001
Mustang	289 V8 CARB - Hi Perf.	E-1560	HP-3001
Ranchero	289 V8 CARB	E-1040	HP-3001
Taunus	2.0L V6 CARB	E-4790	
Thunderbird	390 V8 CARB		HP-3001
Thunderbird	390 V8 CARB - Calif.	E-1080	HP-3001
Thunderbird	390 V8 CARB - exc. Calif	E-1090	HP-3001
1964 FORD			
F100 Pickup	292 V8 CARB	E-1040	HP-3001
Fairlane	289 V8 CARB	E-1040	HP-3001

*Indicates 2 filters required ♦ - Intake kit available - see page 80 Applications updated daily at knfilters.com

AIR & OIL FILTERS

Vehicle	Engine Type	Air Filter	Oil Filter
1964 FORD			
Fairlane	427 V8 CARB	E-1960	HP-3001
Falcon	170 L6 CARB	E-1080	HP-3001
Falcon	260 V8 CARB	E-1040	HP-3001
Falcon	289 V8 CARB	E-1040	HP-3001
Falcon Sedan Delivery	170 L6 CARB	E-1080	HP-3001
Falcon Sedan Delivery	260 V8 CARB	E-1040	HP-3001
Galaxie	352 V8 CARB	E-1110	HP-3001
Galaxie	390 V8 CARB	E-1960	HP-3001
Galaxie 500	352 V8 CARB	E-1110	HP-3001
Galaxie 500	390 V8 CARB	E-1960	HP-3001
Mustang	170 L6 CARB	E-1080	HP-3001
Mustang	260 V8 CARB	E-1080	HP-3001
Mustang	289 V8 CARB		HP-3001
Mustang	289 V8 CARB - exc. Hi Perf.	E-1080	HP-3001
Mustang	289 V8 CARB - Hi Perf.	E-1090	HP-3001
Thunderbird	390 V8 CARB	E-1110	HP-3001
Thunderbird	427 V8 CARB	E-1960	HP-3001
1963 FORD			
F100 Pickup	292 V8 CARB	E-1040	HP-3001
Falcon	260 V8 CARB	E-1040	HP-3001
Falcon Sedan Delivery	260 V8 CARB	E-1040	HP-3001
Galaxie	406 V8 CARB	E-1960	HP-3001
Galaxie 500	289 V8 CARB	E-1040	HP-3001
Galaxie 500	352 V8 CARB	E-1110	HP-3001
Galaxie 500	390 V8 CARB	E-1110	HP-3001
Galaxie 500	406 V8 CARB	E-1960	HP-3001
Thunderbird	390 V8 CARB	E-1110	HP-3001
Thunderbird	410 V8 CARB	E-1960	HP-3001
Thunderbird	427 V8 CARB	E-1960	HP-3001
1962 FORD			
F100 Pickup	223 L6 CARB	E-1080	HP-3001
Falcon	170 L6 CARB	E-1080	HP-3001
Galaxie	390 V8 CARB	E-1960	HP-3001
Galaxie	406 V8 CARB		HP-3001
Galaxie 500	390 V8 CARB	E-1960	HP-3001
Galaxie 500	406 V8 CARB		HP-3001
Thunderbird	390 V8 CARB		HP-3001
1961 FORD			
Galaxie	352 V8 CARB	E-1960	HP-3001
Thunderbird	390 V8 CARB		HP-3001
1960 FORD			
Thunderbird	352 V8 CARB		HP-3001
1959 FORD			
F Series	352 V8 CARB		HP-3001
1957 FORD			
Fairlane	312 V8 CARB		HP-3001
Thunderbird	312 V8 CARB		HP-3001
2007 GARELLI			
BT151 Mosquito	151	HA-1510	
2012 GAS GAS			
EC250 Six Days	250		KN-140
2005 GAS GAS			
EC300	300	GG-1203	
2003 GAS GAS			
EC300	300	GG-1203	

Vehicle	Engine Type	Air Filter	Oil Filter
1997 GEO			
Metro	1.0L L3 F/I	E-9209	HP-1002
Metro	1.3L L4 F/I	E-9209	HP-1002
Prizm	1.6L L4 F/I	33-2672	HP-1003
Prizm	1.8L L4 F/I	33-2672	HP-1003
Tracker	1.6L L4 F/I	33-2065	HP-1002
1996 GEO			
Metro	1.0L L3 F/I	E-9209	HP-1002
Metro	1.3L L4 F/I	E-9209	HP-1002
Prizm	1.6L L4 F/I	33-2672	HP-1003
Prizm	1.8L L4 F/I	33-2672	HP-1003
Tracker	1.6L L4 F/I	33-2065	HP-1002
1995 GEO			
Metro	1.0L L3 F/I	E-9209	HP-1002
Metro	1.3L L4 F/I	E-9209	HP-1002
Prizm	1.6L L4 F/I	33-2672	HP-1003
Prizm	1.8L L4 F/I	33-2672	HP-1003
Tracker	1.6L L4 F/I - VIN 6	33-2065	HP-1002
Tracker	1.6L L4 TBI - VIN U	33-2700	HP-1002
1994 GEO			
Metro	1.0L L3 F/I	E-9209	HP-1002
Prizm	1.6L L4 F/I	33-2672	HP-1003
Prizm	1.8L L4 F/I	33-2672	HP-1003
Tracker	1.6L L4 F/I - VIN 6	33-2065	HP-1002
Tracker	1.6L L4 F/I - VIN U	33-2700	HP-1002
1993 GEO			
Metro	1.0L L3 F/I	E-9209	HP-1002
Prizm	1.6L L4 F/I		HP-1003
Prizm	1.8L L4 F/I		HP-1003
Storm	1.6L L4 F/I	33-2050-1	
Storm	1.8L L4 F/I	33-2050-1	HP-1004
Tracker	1.6L L4 F/I	33-2700	HP-1002
1992 GEO			
Metro	1.0L L3 F/I	E-9209	HP-1002
Prizm	1.6L L4 F/I	33-2030	HP-1003
Prizm GSi	1.6L L4 F/I	33-2041-1	HP-1003
Storm	1.6L L4 F/I	33-2050-1	
Storm	1.8L L4 F/I	33-2050-1	HP-1004
Tracker	1.6L L4 F/I	33-2700	HP-1002
1991 GEO			
Metro	1.0L L3 F/I	E-9209	HP-1002
Prizm	1.6L L4 F/I	33-2030	HP-1003
Prizm GSi	1.6L L4 F/I	33-2041-1	HP-1003
Storm	1.6L L4 F/I	33-2050-1	HP-1004
Tracker	1.6L L4 F/I	33-2700	HP-1002
1990 GEO			
Metro	1.0L L3 F/I	E-9209	HP-1002
Prizm	1.6L L4 F/I	33-2030	HP-1003
Prizm GSi	1.6L L4 F/I	33-2041-1	HP-1003
Storm	1.6L L4 F/I	33-2050-1	HP-1004
Tracker	1.6L L4 F/I	33-2700	HP-1002
1989 GEO			
Metro	1.0L L3 F/I	E-9209	HP-1002
Tracker	1.6L L4 F/I	33-2700	HP-1002
2013 GMC			
Acadia	3.6L V6 F/I	33-2394	HP-2011
Savana 1500	5.3L V8 F/I	E-1986	HP-1017
Savana 3500	6.0L V8 F/I	E-1986	HP-1017
Sierra 1500	4.3L V6 F/I		HP-1001
Sierra 1500	4.8L V8 F/I	33-2129	HP-1017

*Indicates 2 filters required ♦ - Intake kit available - see page 80 Applications updated daily at knfilters.com

Partial Listing - Complete List of Vehicles and Applications at knfilters.com

Vehicle	Engine Type	Air Filter	Oil Filter
2013 GMC			
Sierra 1500	5.3L V8 F/I	33-2129♦	HP-1017
Sierra 1500	6.2L V8 F/I	33-2135	HP-1017
Sierra 1500 Hybrid	6.0L V8 F/I	33-2135	HP-1017
Sierra 2500 HD	6.0L V8 F/I	33-2135	HP-1017
Sierra 2500 HD	6.6L V8 DSL	33-2466	HP-3003
Sierra 3500 HD	6.0L V8 F/I	33-2135	HP-1017
Sierra 3500 HD	6.6L V8 DSL	33-2466	HP-3003
Sierra Denali	6.2L V8 F/I	33-2135♦	HP-1017
Terrain	2.4L L4 F/I	33-2439♦	HP-7000
Terrain	3.0L V6 F/I	33-2439	HP-2011
Terrain	3.6L V6 F/I	33-2439	HP-2011
Yukon	5.3L V8 F/I	33-2129♦	HP-1017
Yukon Denali	6.2L V8 F/I	33-2135♦	HP-1017
Yukon Denali Hybrid	6.0L V8 F/I	33-2135	HP-1017
Yukon Denali XL	6.2L V8 F/I	33-2135♦	HP-1017
Yukon Hybrid	6.0L V8 F/I	33-2135	HP-1017
Yukon XL 1500	5.3L V8 F/I	33-2129♦	HP-1017
Yukon XL 1500	6.2L V8 F/I	33-2135♦	HP-1017
Yukon XL 2500	6.0L V8 F/I	33-2135	HP-1017
2012 GMC			
Acadia	3.6L V6 F/I	33-2394	HP-2011
Canyon	2.9L L4 F/I	33-2408♦	HP-1007
Canyon	3.7L L5 F/I	33-2408♦	HP-2006
Canyon	5.3L V8 F/I	33-2408	HP-1017
Savana 1500	4.3L V6 F/I	E-1986	HP-1001
Savana 1500	5.3L V8 F/I	E-1986	HP-1017
Savana 2500	4.8L V8 F/I	E-1986	HP-1017
Savana 2500	6.0L V8 F/I	E-1986	HP-1017
Savana 2500	6.6L V8 DSL		HP-3003
Savana 3500	6.0L V8 F/I	E-1986	HP-1017
Sierra 1500	4.3L V6 F/I	33-2129	HP-1001
Sierra 1500	4.8L V8 F/I	33-2129♦	HP-1017
Sierra 1500	5.3L V8 F/I	33-2129♦	HP-1017
Sierra 1500	6.2L V8 F/I	33-2135♦	HP-1017
Sierra 1500 Hybrid	6.0L V8 F/I	33-2135	HP-1017
Sierra 2500 HD	6.0L V8 F/I	33-2135♦	HP-1017
Sierra 2500 HD	6.6L V8 DSL	33-2466♦	HP-3003
Sierra 3500 HD	6.0L V8 F/I	33-2135♦	HP-1017
Sierra 3500 HD	6.6L V8 DSL	33-2466♦	HP-3003
Sierra Denali	6.2L V8 F/I	33-2135	HP-1017
Terrain	2.4L L4 F/I	33-2439♦	HP-7000
Terrain	3.0L V6 F/I	33-2439	HP-2011
Yukon	5.3L V8 F/I	33-2129♦	HP-1017
Yukon Denali	6.2L V8 F/I	33-2135♦	HP-1017
Yukon Denali Hybrid	6.0L V8 F/I	33-2135	HP-1017
Yukon Denali XL	6.2L V8 F/I	33-2135♦	HP-1017
Yukon Hybrid	6.0L V8 F/I	33-2135	HP-1017
Yukon XL 1500	5.3L V8 F/I	33-2129♦	HP-1017
Yukon XL 1500	6.2L V8 F/I	33-2135♦	HP-1017
Yukon XL 2500	6.0L V8 F/I	33-2135	HP-1017
2011 GMC			
Acadia	3.6L V6 F/I	33-2394	HP-2011
Canyon	2.9L L4 F/I	33-2408♦	HP-1007
Canyon	3.7L L5 F/I	33-2408♦	HP-2006
Canyon	5.3L V8 F/I	33-2408	HP-1017
Savana 1500	4.3L V6 F/I	E-1986	HP-1001
Savana 1500	5.3L V8 F/I	E-1986	HP-1017
Savana 2500	4.8L V8 F/I	E-1986	HP-1017
Savana 2500	6.0L V8 F/I	E-1986	HP-1017
Savana 3500	6.0L V8 F/I	E-1986	HP-1017
Savana 3500	6.6L V8 DSL		HP-3003
Sierra 1500	4.3L V6 F/I	33-2129	HP-1001
Sierra 1500	4.8L V8 F/I	33-2129♦	HP-1017
Sierra 1500	5.3L V8 F/I	33-2129♦	HP-1017

Vehicle	Engine Type	Air Filter	Oil Filter
2011 GMC			
Sierra 1500	6.2L V8 F/I	33-2135♦	HP-1017
Sierra 1500 Hybrid	6.0L V8 F/I	33-2135	HP-1017
Sierra 2500 HD	6.0L V8 F/I	33-2135♦	HP-1017
Sierra 2500 HD	6.6L V8 DSL	33-2466♦	HP-3003
Sierra 3500 HD	6.0L V8 F/I	33-2135♦	HP-1017
Sierra 3500 HD	6.6L V8 DSL	33-2466♦	HP-3003
Sierra Denali	6.2L V8 F/I	33-2135♦	HP-1017
Terrain	2.4L L4 F/I	33-2439♦	HP-7000
Terrain	3.0L V6 F/I	33-2439	HP-2011
Yukon	5.3L V8 F/I	33-2129♦	HP-1017
Yukon Denali	6.2L V8 F/I	33-2135♦	HP-1017
Yukon Denali Hybrid	6.0L V8 F/I	33-2135	HP-1017
Yukon Denali XL	6.2L V8 F/I	33-2135♦	HP-1017
Yukon Hybrid	6.0L V8 F/I	33-2135	HP-1017
Yukon XL 1500	5.3L V8 F/I	33-2129♦	HP-1017
Yukon XL 1500	6.2L V8 F/I	33-2135♦	HP-1017
Yukon XL 2500	6.0L V8 F/I	33-2135	HP-1017
2010 GMC			
Acadia	3.6L V6 F/I	33-2394	HP-1017
Canyon	2.9L L4 F/I	33-2408♦	HP-1007
Canyon	3.7L L5 F/I	33-2408♦	HP-2006
Canyon	5.3L V8 F/I	33-2408	HP-1017
Savana 1500	4.3L V6 F/I	E-1986	HP-1001
Savana 1500	5.3L V8 F/I	E-1986	HP-1017
Savana 2500	4.8L V8 F/I	E-1986	HP-1017
Savana 2500	6.0L V8 F/I	E-1986	HP-1017
Savana 3500	6.0L V8 F/I	E-1986	HP-1017
Sierra 1500	4.3L V6 F/I	33-2129	HP-1001
Sierra 1500	4.8L V8 F/I	33-2129♦	HP-1017
Sierra 1500	5.3L V8 F/I	33-2129♦	HP-1017
Sierra 1500	6.2L V8 F/I	33-2135♦	HP-1017
Sierra 1500 Hybrid	6.0L V8 F/I	33-2135	HP-1017
Sierra 2500 HD	6.0L V8 F/I	33-2135♦	HP-1017
Sierra 2500 HD	6.6L V8 DSL	E-0781♦	HP-3003
Sierra 3500 HD	6.0L V8 F/I	33-2135	HP-1017
Sierra 3500 HD	6.6L V8 DSL	E-0781♦	HP-3003
Sierra Denali	6.2L V8 F/I	33-2135♦	HP-1017
Terrain	2.4L L4 F/I	33-2439♦	HP-7000
Terrain	3.0L V6 F/I	33-2439	HP-1017
Yukon	4.8L V8 F/I	33-2129♦	
Yukon	5.3L V8 F/I	33-2129♦	HP-1017
Yukon Denali	6.2L V8 F/I	33-2135♦	HP-1017
Yukon Denali Hybrid	6.0L V8 F/I	33-2135	HP-1017
Yukon Denali XL	6.2L V8 F/I	33-2135♦	HP-1017
Yukon Hybrid	6.0L V8 F/I	33-2135	HP-1017
Yukon XL 1500	5.3L V8 F/I	33-2129♦	HP-1017
Yukon XL 1500	6.2L V8 F/I	33-2135♦	HP-1017
Yukon XL 2500	6.0L V8 F/I	33-2135	HP-1017
2009 GMC			
Acadia	3.6L V6 F/I	33-2394	HP-1017
C5500 Topkick	6.6L V8 DSL		HP-3003
Canyon	2.9L L4 F/I	33-2408♦	HP-1007
Canyon	3.7L L5 F/I	33-2408♦	HP-2006
Canyon	5.3L V8 F/I	33-2408	HP-1017
Envoy	4.2L L6 F/I	E-1009♦	HP-2006
Envoy	5.3L V8 F/I	E-1009	HP-1017
Savana 1500	4.3L V6 F/I	E-1986	HP-1001
Savana 1500	5.3L V8 F/I	E-1986	HP-1017
Savana 2500	4.8L V8 F/I	E-1986	HP-1017
Savana 2500	6.0L V8 F/I	E-1986	HP-1017
Savana 2500	6.6L V8 DSL		HP-3003
Savana 3500	6.0L V8 F/I	E-1986	HP-1017
Sierra 1500	4.3L V6 F/I	33-2129	HP-1001

*Indicates 2 filters required ♦ - Intake kit available - see page 80 Applications updated daily at knfilters.com

AIR & OIL FILTERS

Vehicle	Engine Type	Air Filter	Oil Filter
2009 GMC			
Sierra 1500	4.8L V8 F/I	33-2129 ♦	HP-1017
Sierra 1500	5.3L V8 F/I	33-2129 ♦	HP-1017
Sierra 1500	6.0L V8 F/I	33-2135 ♦	HP-1017
Sierra 1500	6.2L V8 F/I		HP-1017
Sierra 1500 Hybrid	6.0L V8 F/I	33-2135	HP-1017
Sierra 2500 HD	6.0L V8 F/I	33-2135 ♦	HP-1017
Sierra 2500 HD	6.6L V8 DSL	E-0781 ♦	HP-3003
Sierra 3500 HD	6.0L V8 F/I	33-2135 ♦	HP-1017
Sierra 3500 HD	6.6L V8 DSL	E-0781 ♦	HP-3003
Sierra Denali	6.2L V8 F/I	33-2135 ♦	HP-1017
Yukon	4.8L V8 F/I	33-2129 ♦	HP-1017
Yukon	5.3L V8 F/I	33-2129 ♦	HP-1017
Yukon Denali	6.2L V8 F/I	33-2135 ♦	HP-1017
Yukon Denali XL	6.2L V8 F/I	33-2135 ♦	HP-1017
Yukon Hybrid	6.0L V8 F/I	33-2135	HP-1017
Yukon XL 1500	5.3L V8 F/I	33-2129 ♦	HP-1017
Yukon XL 1500	6.0L V8 F/I	33-2135 ♦	HP-1017
Yukon XL 1500	6.2L V8 F/I	33-2135	HP-1017
Yukon XL 2500	6.0L V8 F/I	33-2135	HP-1017
2008 GMC			
Acadia	3.6L V6 F/I	33-2394	HP-1017
C5500 Topkick	6.6L V8 DSL		HP-3003
Canyon	2.9L L4 F/I	33-2408 ♦	HP-1007
Canyon	3.7L L5 F/I	33-2408 ♦	HP-2006
Envoy	4.2L L6 F/I	E-1009 ♦	HP-2006
Envoy Denali	5.3L V8 F/I	E-1009	HP-1017
Savana 1500	4.3L V6 F/I	E-1986	HP-1001
Savana 1500	5.3L V8 F/I	E-1986	HP-1017
Savana 2500	4.8L V8 F/I	E-1986	HP-1017
Savana 2500	6.0L V8 F/I	E-1986	HP-1017
Savana 2500	6.6L V8 DSL		HP-3003
Savana 3500	6.0L V8 F/I	E-1986	HP-1017
Savana 3500	6.6L V8 DSL		HP-3003
Sierra 1500	4.3L V6 F/I	33-2129	HP-1001
Sierra 1500	4.8L V8 F/I	33-2129 ♦	HP-1017
Sierra 1500	5.3L V8 F/I	33-2129 ♦	HP-1017
Sierra 1500	6.0L V8 F/I	33-2135 ♦	HP-1017
Sierra 2500 HD	6.0L V8 F/I	33-2135 ♦	HP-1017
Sierra 2500 HD	6.6L V8 DSL	E-0781 ♦	HP-3003
Sierra 3500 HD	6.0L V8 F/I	33-2135 ♦	HP-1017
Sierra 3500 HD	6.6L V8 DSL	E-0781 ♦	HP-3003
Sierra Denali	6.2L V8 F/I	33-2135 ♦	HP-1017
Yukon	4.8L V8 F/I	33-2129 ♦	HP-1017
Yukon	5.3L V8 F/I	33-2129 ♦	HP-1017
Yukon Denali	6.2L V8 F/I	33-2135 ♦	HP-1017
Yukon Denali XL	6.2L V8 F/I	33-2135 ♦	HP-1017
Yukon Hybrid	6.0L V8 F/I	33-2135	HP-1017
Yukon XL 1500	5.3L V8 F/I	33-2129 ♦	HP-1017
Yukon XL 1500	6.0L V8 F/I	33-2135 ♦	HP-1017
Yukon XL 1500	6.2L V8 F/I	33-2135 ♦	HP-1017
Yukon XL 2500	6.0L V8 F/I	33-2135	HP-1017
2007 GMC			
Acadia	3.6L V6 F/I	33-2394	HP-1017
Canyon	2.9L L4 F/I	E-0773 ♦	HP-1007
Canyon	3.7L L5 F/I	E-0773 ♦	HP-2006
Envoy	4.2L L6 F/I	E-1009 ♦	HP-2006
Envoy Denali	5.3L V8 F/I	E-1009	HP-1017
Savana 1500	4.3L V6 F/I	E-1008	HP-1001
Savana 1500	5.3L V8 F/I	E-1008	HP-1017
Savana 2500	4.8L V8 F/I	E-1008	HP-1017
Savana 2500	6.0L V8 F/I	E-1008	HP-1017
Savana 3500	6.0L V8 F/I	E-1008	HP-1017
Savana 3500	6.6L V8 DSL	E-0783	HP-3003

Vehicle	Engine Type	Air Filter	Oil Filter
2007 GMC			
Sierra 1500	4.3L V6 F/I	33-2129	HP-1001
Sierra 1500	4.8L V8 F/I	33-2129 ♦	HP-1017
Sierra 1500	5.3L V8 F/I	33-2129 ♦	HP-1017
Sierra 1500	6.0L V8 F/I	33-2135 ♦	HP-1017
Sierra 1500 Classic	4.3L V6 F/I	33-2129 ♦	HP-1001
Sierra 1500 Classic	4.8L V8 F/I	33-2129 ♦	HP-1017
Sierra 1500 Classic	5.3L V8 F/I	33-2129 ♦	HP-1017
Sierra 1500 HD	6.0L V8 F/I	33-2135	HP-1017
Sierra 1500 HD Classic	6.0L V8 F/I	33-2135 ♦	HP-1017
Sierra 2500 HD	6.0L V8 F/I	33-2135 ♦	HP-1017
Sierra 2500 HD	6.6L V8 DSL	E-0781 ♦	HP-3003
Sierra 2500 HD Classic	6.0L V8 F/I	33-2135 ♦	HP-1017
Sierra 2500 HD Classic	6.6L V8 DSL	E-0781 ♦	HP-3003
Sierra 2500 HD Classic	8.1L V8 F/I	33-2135 ♦	HP-1011
Sierra 3500 Classic	6.0L V8 F/I	33-2135 ♦	HP-1017
Sierra 3500 Classic	6.6L V8 DSL	E-0781 ♦	HP-3003
Sierra 3500 Classic	8.1L V8 F/I	33-2135 ♦	HP-1011
Sierra 3500 HD	6.0L V8 F/I	33-2135 ♦	HP-1017
Sierra 3500 HD	6.6L V8 DSL	E-0781 ♦	HP-3003
Sierra Denali	6.2L V8 F/I	33-2135 ♦	HP-1017
Sierra Denali Classic	6.0L V8 F/I	33-2135 ♦	HP-1017
Yukon	4.8L V8 F/I	33-2129 ♦	HP-1017
Yukon	5.3L V8 F/I	33-2129 ♦	HP-1017
Yukon Denali	6.2L V8 F/I	33-2135 ♦	HP-1017
Yukon Denali XL	6.2L V8 F/I	33-2135 ♦	HP-1017
Yukon XL 1500	5.3L V8 F/I	33-2129 ♦	HP-1017
Yukon XL 1500	6.0L V8 F/I	33-2135 ♦	HP-1017
Yukon XL 1500	6.2L V8 F/I	33-2135 ♦	HP-1017
Yukon XL 2500	6.0L V8 F/I	33-2135 ♦	HP-1017
Yukon XL 2500	8.1L V8 F/I	33-2135	
2006 GMC			
Canyon	2.8L L4 F/I	E-0773 ♦	HP-1007
Canyon	3.5L L5 F/I	E-0773 ♦	HP-2006
Envoy	4.2L L6 F/I	E-1009 ♦	HP-2006
Envoy Denali	5.3L V8 F/I	E-1009	HP-1007
Savana 1500	4.3L V6 F/I	E-1008	HP-1001
Savana 1500	5.3L V8 F/I	E-1008	HP-1007
Savana 2500	4.8L V8 F/I	E-1008	HP-1007
Savana 2500	6.0L V8 F/I	E-1008	HP-1007
Savana 2500	6.6L V8 DSL	E-0783	HP-3003
Savana 3500	4.8L V8 F/I	E-1008	HP-1007
Savana 3500	6.0L V8 F/I	E-1008	HP-1007
Savana 3500	6.6L V8 DSL	E-0783	HP-3003
Sierra 1500	4.3L V6 F/I	33-2129 ♦	HP-1001
Sierra 1500	4.8L V8 F/I	33-2129 ♦	HP-1007
Sierra 1500	5.3L V8 F/I	33-2129 ♦	HP-1007
Sierra 1500	6.0L V8 F/I	33-2135 ♦	HP-1007
Sierra 1500 HD	6.0L V8 F/I	33-2135 ♦	HP-1007
Sierra 2500 HD	6.0L V8 F/I	33-2135 ♦	HP-1007
Sierra 2500 HD	6.6L V8 DSL	E-0781 ♦	HP-3003
Sierra 2500 HD	8.1L V8 F/I	33-2135 ♦	HP-1011
Sierra 3500	6.0L V8 F/I	33-2135 ♦	HP-1007
Sierra 3500	6.6L V8 DSL	E-0781 ♦	HP-3003
Sierra 3500	8.1L V8 F/I	33-2135 ♦	HP-1011
Sierra Denali	6.0L V8 F/I	33-2135 ♦	HP-1007
Topkick CK4500	6.6L V8 DSL		HP-3003
Topkick CK5500	6.6L V8 DSL		HP-3003
Yukon	4.8L V8 F/I	33-2129 ♦	HP-1007
Yukon	5.3L V8 F/I	33-2129 ♦	HP-1007
Yukon Denali	6.0L V8 F/I	33-2135 ♦	HP-1007

*Indicates 2 filters required ♦ - Intake kit available - see page 80 Applications updated daily at knfilters.com

Partial Listing - Complete List of Vehicles and Applications at knfilters.com

Vehicle	Engine Type	Air Filter	Oil Filter
2006 GMC			
Yukon Denali XL	6.0L V8 F/I	33-2135 ♦	HP-1007
Yukon XL 1500	5.3L V8 F/I	33-2129 ♦	HP-1007
Yukon XL 2500	6.0L V8 F/I	33-2135 ♦	HP-1007
Yukon XL 2500	8.1L V8 F/I	33-2135 ♦	HP-1011
2005 GMC			
Canyon	2.8L L4 F/I	E-0773 ♦	HP-1007
Canyon	3.5L L5 F/I	E-0773 ♦	HP-2006
Envoy	4.2L L6 F/I	E-1009 ♦	HP-2006
Envoy	5.3L V8 F/I	E-1009 ♦	HP-1007
Jimmy	4.3L V6 F/I	33-2042	HP-2001
Safari Van	4.3L V6 F/I	33-2225	HP-1001
Savana 1500	4.3L V6 F/I	E-1008	HP-1001
Savana 1500	5.3L V8 F/I	E-1008	HP-1007
Savana 2500	4.8L V8 F/I	E-1008	HP-1007
Savana 2500	5.3L V8 F/I	E-1008	HP-1007
Savana 2500	6.0L V8 F/I	E-1008	HP-1007
Savana 3500	6.0L V8 F/I	E-1008	HP-1007
Sierra 1500	4.3L V6 F/I	33-2129 ♦	HP-1001
Sierra 1500	4.8L V8 F/I	33-2129 ♦	HP-1007
Sierra 1500	5.3L V8 F/I	33-2129 ♦	HP-1007
Sierra 1500 HD	6.0L V8 F/I	33-2135 ♦	HP-1007
Sierra 2500 HD	6.0L V8 F/I	33-2135 ♦	HP-1007
Sierra 2500 HD	6.6L V8 DSL		HP-3003
Sierra 2500 HD	6.6L V8 DSL - w/Panel Filter	33-2135 ♦	HP-3003
Sierra 2500 HD	6.6L V8 DSL - w/Round Filter	E-0781 ♦	HP-3003
Sierra 2500 HD	8.1L V8 F/I	33-2135 ♦	HP-1011
Sierra 3500	6.0L V8 F/I	33-2135 ♦	HP-1007
Sierra 3500	6.6L V8 DSL		HP-3003
Sierra 3500	6.6L V8 DSL - w/Panel Filter	33-2135 ♦	HP-3003
Sierra 3500	6.6L V8 DSL - w/Round Filter	E-0781 ♦	HP-3003
Sierra 3500	8.1L V8 F/I	33-2135 ♦	HP-1011
Sierra Denali	6.0L V8 F/I	33-2135 ♦	HP-1007
Topkick CK4500	6.6L V8 DSL		HP-3003
Topkick CK5500	6.6L V8 DSL		HP-3003
Yukon	4.8L V8 F/I	33-2129 ♦	HP-1007
Yukon	5.3L V8 F/I	33-2129 ♦	HP-1007
Yukon Denali	6.0L V8 F/I	33-2135 ♦	HP-1007
Yukon Denali XL	6.0L V8 F/I	33-2135 ♦	HP-1007
Yukon XL 1500	5.3L V8 F/I	33-2129 ♦	HP-1007
Yukon XL 2500	6.0L V8 F/I	33-2135 ♦	HP-1007
Yukon XL 2500	8.1L V8 F/I	33-2135 ♦	HP-1011
2004 GMC			
Canyon	2.8L L4 F/I	E-0773 ♦	HP-1007
Canyon	3.5L L5 F/I	E-0773 ♦	HP-2006
Envoy	4.2L L6 F/I	E-1009 ♦	HP-2006
Envoy	5.3L V8 F/I	E-1009 ♦	HP-1007
Jimmy	4.3L V6 F/I	33-2042	HP-2001
Safari Van	4.3L V6 F/I	33-2225	HP-1001
Savana 1500	4.3L V6 F/I	E-1008	HP-1001
Savana 1500	5.3L V8 F/I	E-1008	HP-1007
Savana 2500	4.8L V8 F/I	E-1008	HP-1007
Savana 2500	5.3L V8 F/I	E-1008	HP-1007
Savana 2500	6.0L V8 F/I	E-1008	HP-1007
Savana 3500	6.0L V8 F/I	E-1008	HP-1007
Sierra 1500	4.3L V6 F/I	33-2129 ♦	HP-1001
Sierra 1500	4.8L V8 F/I	33-2129 ♦	HP-1007
Sierra 1500	5.3L V8 F/I	33-2129 ♦	HP-1007
Sierra 2500	6.0L V8 F/I	33-2135 ♦	HP-1007
Sierra 2500 HD	6.0L V8 F/I	33-2135 ♦	HP-1007
Sierra 2500 HD	6.6L V8 DSL	33-2135 ♦	HP-3003

Vehicle	Engine Type	Air Filter	Oil Filter
2004 GMC			
Sierra 2500 HD	8.1L V8 F/I	33-2135 ♦	HP-1011
Sierra 3500	6.0L V8 F/I	33-2135 ♦	HP-1007
Sierra 3500	6.6L V8 DSL	33-2135 ♦	HP-3003
Sierra 3500	8.1L V8 F/I	33-2135 ♦	HP-1011
Sierra Denali	6.0L V8 F/I	33-2135 ♦	HP-1007
Sonoma	4.3L V6 F/I	33-2042 ♦	HP-2001
Topkick CK4500	6.6L V8 DSL		HP-3003
Topkick CK5500	6.6L V8 DSL		HP-3003
Yukon	4.8L V8 F/I	33-2129 ♦	HP-1007
Yukon	5.3L V8 F/I	33-2129 ♦	HP-1007
Yukon Denali	6.0L V8 F/I	33-2135 ♦	HP-1007
Yukon Denali XL	6.0L V8 F/I	33-2135 ♦	HP-1007
Yukon XL 1500	5.3L V8 F/I	33-2129 ♦	HP-1007
Yukon XL 2500	6.0L V8 F/I	33-2135 ♦	HP-1007
Yukon XL 2500	8.1L V8 F/I	33-2135 ♦	HP-1011
2003 GMC			
Envoy	4.2L L6 F/I	E-1009 ♦	HP-2006
Envoy	5.3L V8 F/I	E-1009 ♦	HP-1007
Jimmy	4.3L V6 F/I	33-2042	
Jimmy	4.3L V6 F/I - 2WD	33-2042	HP-1001
Jimmy	4.3L V6 F/I - 4WD	33-2042	HP-2001
Safari Van	4.3L V6 F/I	33-2225	HP-1001
Savana 1500	4.3L V6 F/I	E-1008	HP-1001
Savana 1500	5.3L V8 F/I	E-1008	HP-1007
Savana 2500	4.8L V8 F/I	E-1008	HP-1007
Savana 2500	5.3L V8 F/I	E-1008	HP-1007
Savana 2500	6.0L V8 F/I	E-1008	HP-1007
Savana 3500	6.0L V8 F/I	E-1008	HP-1007
Sierra 1500	4.3L V6 F/I	33-2129 ♦	HP-1001
Sierra 1500	4.8L V8 F/I	33-2129 ♦	HP-1007
Sierra 1500	5.3L V8 F/I	33-2129 ♦	HP-1007
Sierra 1500 HD	6.0L V8 F/I	33-2135 ♦	HP-1007
Sierra 2500	6.0L V8 F/I	33-2135 ♦	HP-1007
Sierra 2500 HD	6.0L V8 F/I	33-2135 ♦	HP-1007
Sierra 2500 HD	6.6L V8 DSL	33-2135 ♦	HP-3003
Sierra 2500 HD	8.1L V8 F/I	33-2135 ♦	HP-1011
Sierra 3500	6.0L V8 F/I	33-2135 ♦	HP-1007
Sierra 3500	6.6L V8 DSL	33-2135 ♦	HP-3003
Sierra 3500	8.1L V8 F/I	33-2135 ♦	HP-1011
Sierra Denali	6.0L V8 F/I	33-2135 ♦	HP-1007
Sonoma	2.2L L4 F/I	33-2042 ♦	HP-1001
Sonoma	4.3L V6 F/I	33-2042 ♦	
Sonoma	4.3L V6 F/I - 2WD	33-2042	HP-1001
Sonoma	4.3L V6 F/I - 4WD	33-2042	HP-2001
Yukon	4.8L V8 F/I	33-2129 ♦	HP-1007
Yukon	5.3L V8 F/I	33-2129 ♦	HP-1007
Yukon Denali	6.0L V8 F/I	33-2135 ♦	HP-1007
Yukon Denali XL	6.0L V8 F/I	33-2135 ♦	HP-1007
Yukon XL 1500	5.3L V8 F/I	33-2129 ♦	HP-1007
Yukon XL 2500	6.0L V8 F/I	33-2135 ♦	HP-1007
Yukon XL 2500	8.1L V8 F/I	33-2135 ♦	HP-1011
2002 GMC			
C3500	6.5L V8 DSL		HP-3002
Envoy	4.2L L6 F/I	E-1009 ♦	HP-2006
Jimmy	4.3L V6 F/I	33-2042	
Jimmy	4.3L V6 F/I - 2WD	33-2042	HP-1001
Jimmy	4.3L V6 F/I - 4WD	33-2042	HP-2001
Safari Van	4.3L V6 F/I	33-2225	HP-1001
Savana 1500	4.3L V6 F/I	E-1008	HP-1001
Savana 1500	5.0L V8 F/I	E-1008	HP-3002
Savana 1500	5.7L V8 F/I	E-1008	HP-3002
Savana 2500	4.3L V6 F/I	E-1008	HP-1001
Savana 2500	5.7L V8 F/I	E-1008	HP-3002

*Indicates 2 filters required ♦ - Intake kit available - see page 80 Applications updated daily at knfilters.com

AIR & OIL FILTERS

Vehicle	Engine Type	Air Filter	Oil Filter
2002 GMC			
Savana 3500	5.7L V8 F/I	E-1008	HP-3002
Savana 3500	8.1L V8 F/I	E-1008	HP-1011
Sierra 1500	4.3L V6 F/I	33-2129 ♦	HP-1001
Sierra 1500	4.8L V8 F/I	33-2129 ♦	HP-2006
Sierra 1500	5.3L V8 F/I	33-2129 ♦	HP-2006
Sierra 1500 HD	6.0L V8 F/I	33-2135 ♦	HP-2006
Sierra 2500	6.0L V8 F/I	33-2135 ♦	HP-2006
Sierra 2500 HD	6.0L V8 F/I	33-2135 ♦	HP-2006
Sierra 2500 HD	6.6L V8 DSL	33-2135 ♦	HP-3003
Sierra 2500 HD	8.1L V8 F/I	33-2135 ♦	HP-1011
Sierra 3500	6.0L V8 F/I	33-2135 ♦	HP-2006
Sierra 3500	6.6L V8 DSL	33-2135 ♦	HP-3003
Sierra 3500	8.1L V8 F/I	33-2135 ♦	HP-1011
Sierra Denali	6.0L V8 F/I	33-2135 ♦	HP-2006
Sonoma	2.2L L4 F/I	33-2042 ♦	HP-1001
Sonoma	4.3L V6 F/I	33-2042 ♦	HP-1001
Yukon	4.8L V8 F/I	33-2129 ♦	HP-2006
Yukon	5.3L V8 F/I	33-2129 ♦	HP-2006
Yukon Denali	6.0L V8 F/I	33-2135 ♦	HP-2006
Yukon Denali XL	6.0L V8 F/I	33-2135 ♦	HP-2006
Yukon XL 1500	5.3L V8 F/I	33-2129 ♦	HP-2006
Yukon XL 2500	6.0L V8 F/I	33-2135 ♦	HP-2006
Yukon XL 2500	8.1L V8 F/I	33-2135 ♦	HP-1011
2001 GMC			
C3500	6.5L V8 DSL		HP-3002
Jimmy	4.3L V6 F/I	33-2042 ♦	
Jimmy	4.3L V6 F/I - 2WD	33-2042	HP-1001
Jimmy	4.3L V6 F/I - 4WD	33-2042	HP-2001
Safari Van	4.3L V6 F/I	33-2225	HP-1001
Savana 1500	5.0L V8 F/I	E-1008	HP-3002
Savana 1500	5.7L V8 F/I	E-1008	HP-3002
Savana 2500	5.0L V8 F/I	E-1008	HP-3002
Savana 2500	5.7L V8 F/I	E-1008	HP-3002
Savana 3500	5.7L V8 F/I	E-1008	HP-3002
Sierra 1500	4.3L V6 F/I	33-2129 ♦	HP-1001
Sierra 1500	4.8L V8 F/I	33-2129 ♦	HP-2006
Sierra 1500	5.3L V8 F/I	33-2129 ♦	HP-2006
Sierra 1500 HD	6.0L V8 F/I	33-2135 ♦	HP-2006
Sierra 2500	6.0L V8 F/I	33-2135 ♦	HP-2006
Sierra 2500 HD	6.0L V8 F/I	33-2135 ♦	HP-2006
Sierra 2500 HD	6.6L V8 DSL	33-2135 ♦	HP-3003
Sierra 2500 HD	8.1L V8 F/I	33-2135 ♦	HP-1011
Sierra 3500	6.0L V8 F/I	33-2135 ♦	HP-2006
Sierra 3500	6.6L V8 DSL	33-2135 ♦	HP-3003
Sierra 3500	8.1L V8 F/I	33-2135 ♦	HP-1011
Sierra C3	6.0L V8 F/I	33-2135 ♦	HP-2006
Sonoma	2.2L L4 F/I	33-2042 ♦	HP-1001
Sonoma	4.3L V6 F/I	33-2042 ♦	
Sonoma	4.3L V6 F/I - 2WD	33-2042	HP-1001
Sonoma	4.3L V6 F/I - 4WD	33-2042	HP-2001
Yukon	4.8L V8 F/I	33-2129 ♦	HP-2006
Yukon	5.3L V8 F/I	33-2129 ♦	HP-2006
Yukon Denali	6.0L V8 F/I	33-2135 ♦	HP-2006
Yukon Denali XL	6.0L V8 F/I	33-2135 ♦	HP-2006
Yukon XL 1500	5.3L V8 F/I	33-2129 ♦	HP-2006
Yukon XL 2500	6.0L V8 F/I	33-2135 ♦	HP-2006
Yukon XL 2500	8.1L V8 F/I	33-2135 ♦	HP-1011
2000 GMC			
C2500	5.7L V8 F/I	E-1796 ♦	HP-3002
C2500	6.5L V8 DSL	E-1796	HP-3002
C2500	7.4L V8 F/I	E-1796 ♦	HP-3002
C3500	5.7L V8 F/I	E-1796 ♦	HP-3002
C3500	6.5L V8 DSL	E-1796	HP-3002
C3500	7.4L V8 F/I	E-1796 ♦	HP-3002
Jimmy	4.3L V6 F/I	33-2042 ♦	HP-1001
K2500	5.7L V8 F/I	E-1796 ♦	HP-2001
K2500	6.5L V8 DSL	E-1796	HP-3002
K2500	7.4L V8 F/I	E-1796 ♦	HP-1011
K3500	5.7L V8 F/I	E-1796 ♦	HP-2001
K3500	6.5L V8 DSL	E-1796	HP-3002
K3500	7.4L V8 F/I	E-1796 ♦	HP-1011
Safari Van	4.3L V6 F/I	33-2225	HP-1001
Savana 1500	5.0L V8 F/I	33-2111	HP-3002
Savana 1500	5.7L V8 F/I	33-2111	HP-3002
Savana 2500	5.7L V8 F/I	33-2111	HP-3002
Savana 3500	5.7L V8 F/I	33-2111	HP-3002
Sierra 1500	4.3L V6 F/I	33-2129 ♦	HP-1001
Sierra 1500	4.8L V8 F/I	33-2129 ♦	HP-2006
Sierra 1500	5.3L V8 F/I	33-2129 ♦	HP-2006
Sierra 2500	5.3L V8 F/I	33-2129 ♦	HP-2006
Sierra 2500	6.0L V8 F/I	33-2135 ♦	HP-2006
Sonoma	2.2L L4 F/I	33-2042 ♦	HP-1001
Sonoma	4.3L V6 F/I	33-2042 ♦	HP-1001
Yukon	4.8L V8 F/I	33-2129 ♦	HP-2006
Yukon	5.3L V8 F/I	33-2129 ♦	HP-2006
Yukon Denali	5.7L V8 F/I	E-1796 ♦	HP-2001
Yukon XL 1500	5.3L V8 F/I	33-2129 ♦	HP-2006
Yukon XL 2500	6.0L V8 F/I	33-2135 ♦	HP-2006
1999 GMC			
C1500	5.0L V8 F/I	E-1796 ♦	HP-3002
C1500	5.7L V8 F/I	E-1796 ♦	HP-3002
C1500 Suburban	5.7L V8 F/I	E-1796 ♦	HP-3002
C1500 Suburban	6.5L V8 DSL	E-1796	HP-3002
C2500	5.7L V8 F/I	E-1796 ♦	HP-3002
C2500 Suburban	5.7L V8 F/I	E-1796 ♦	HP-3002
C2500 Suburban	6.5L V8 DSL	E-1796	HP-3002
C2500 Suburban	7.4L V8 F/I	E-1796 ♦	HP-3002
C3500	5.7L V8 F/I	E-1796 ♦	HP-3002
C3500	6.5L V8 DSL	E-1796	HP-3002
C3500	7.4L V8 F/I	E-1796 ♦	HP-3002
Jimmy	4.3L V6 F/I	33-2042 ♦	HP-2001
K1500	5.0L V8 F/I	E-1796 ♦	HP-2001
K1500	5.7L V8 F/I	E-1796 ♦	HP-2001
K1500 Suburban	5.7L V8 F/I	E-1796 ♦	HP-2001
K1500 Suburban	6.5L V8 DSL	E-1796	HP-3002
K2500	5.7L V8 F/I	E-1796 ♦	HP-2001
K2500	6.5L V8 DSL	E-1796	HP-3002
K2500	7.4L V8 F/I	E-1796 ♦	HP-1011
K2500 Suburban	5.7L V8 F/I	E-1796 ♦	HP-2001
K2500 Suburban	6.5L V8 DSL	E-1796	HP-3002
K2500 Suburban	7.4L V8 F/I	E-1796 ♦	HP-1011
K3500	5.7L V8 F/I	E-1796 ♦	HP-2001
K3500	6.5L V8 DSL	E-1796	HP-3002
K3500	7.4L V8 F/I	E-1796 ♦	HP-1011
Safari Van	4.3L V6 F/I	33-2225	HP-2001
Savana 1500	5.7L V8 F/I	33-2111	HP-3002
Savana 3500	5.7L V8 F/I	33-2111	HP-3002
Savana 3500	6.5L V8 DSL	33-2111	HP-3002
Savana 3500	7.4L V8 F/I	33-2111	HP-1011
Sierra 1500	4.3L V6 F/I	33-2129 ♦	HP-2001
Sierra 1500	4.8L V8 F/I	33-2129 ♦	HP-2006
Sierra 1500	5.3L V8 F/I	33-2129 ♦	HP-2006
Sierra 2500	5.3L V8 F/I	33-2129 ♦	HP-2006
Sierra 2500	6.0L V8 F/I	33-2135 ♦	HP-2006
Sonoma	2.2L L4 F/I	33-2042 ♦	HP-1001
Sonoma	4.3L V6 F/I	33-2042 ♦	HP-2001

*Indicates 2 filters required ♦ - Intake kit available - see page 80 Applications updated daily at knfilters.com

Partial Listing - Complete List of Vehicles and Applications at knfilters.com

Vehicle	Engine Type	Air Filter	Oil Filter
1999 GMC			
Yukon	5.7L V8 F/I	E-1796 ♦	
Yukon	5.7L V8 F/I - 2WD	E-1796	HP-3002
Yukon	5.7L V8 F/I - 4WD	E-1796	HP-2001
Yukon Denali	5.7L V8 F/I	E-1796 ♦	HP-2001
Yukon Denali	6.5L V8 DSL	E-1796	HP-3002
1998 GMC			
C1500	4.3L V6 F/I	E-1796 ♦	HP-2001
C1500	5.0L V8 F/I	E-1796 ♦	HP-3002
C1500	5.7L V8 F/I	E-1796 ♦	HP-3002
C1500	6.5L V8 DSL	E-1796	HP-3002
C1500 Suburban	5.7L V8 F/I	E-1796 ♦	HP-3002
C1500 Suburban	6.5L V8 DSL	E-1796	HP-3002
C2500	5.7L V8 F/I	E-1796 ♦	HP-3002
C2500	6.5L V8 DSL	E-1796	HP-3002
C2500	7.4L V8 F/I	E-1796 ♦	HP-3002
C2500 Suburban	5.7L V8 F/I	E-1796 ♦	HP-3002
C2500 Suburban	6.5L V8 DSL	E-1796	HP-3002
C2500 Suburban	7.4L V8 F/I	E-1796 ♦	HP-3002
C3500	6.5L V8 DSL	E-1796	HP-3002
C3500	7.4L V8 F/I	E-1796 ♦	HP-3002
Jimmy	4.3L V6 F/I	33-2042 ♦	HP-2001
K1500	4.3L V6 F/I	E-1796	HP-2001
K1500	5.0L V8 F/I	E-1796 ♦	HP-2001
K1500	5.7L V8 F/I	E-1796 ♦	HP-2001
K1500	6.5L V8 DSL	E-1796	HP-3002
K1500 Suburban	5.7L V8 F/I	E-1796 ♦	HP-2001
K1500 Suburban	6.5L V8 DSL	E-1796	HP-3002
K2500	5.7L V8 F/I	E-1796 ♦	HP-2001
K2500	6.5L V8 DSL	E-1796	HP-3002
K2500	7.4L V8 F/I	E-1796 ♦	HP-3002
K2500 Suburban	5.7L V8 F/I	E-1796 ♦	HP-2001
K2500 Suburban	6.5L V8 DSL	E-1796	HP-3002
K2500 Suburban	7.4L V8 F/I	E-1796 ♦	HP-3002
K3500	6.5L V8 DSL	E-1796	HP-3002
K3500	7.4L V8 F/I	E-1796 ♦	HP-3002
Safari Van	4.3L V6 F/I	33-2225	HP-2001
Savana 1500	5.7L V8 F/I	33-2111	HP-3002
Sonoma	2.2L L4 F/I	33-2042 ♦	HP-1001
Sonoma	4.3L V6 F/I	33-2042 ♦	HP-2001
Yukon	5.7L V8 F/I	E-1796 ♦	
Yukon	5.7L V8 F/I - 2WD	E-1796	HP-3002
Yukon	5.7L V8 F/I - 4WD	E-1796	HP-2001
1997 GMC			
C1500	4.3L V6 F/I	E-1796 ♦	HP-2001
C1500	5.0L V8 F/I	E-1796 ♦	HP-3002
C1500	5.7L V8 F/I	E-1796 ♦	HP-3002
C1500	6.5L V8 DSL	E-1796	HP-3002
C1500 Suburban	5.7L V8 F/I	E-1796 ♦	HP-3002
C1500 Suburban	6.5L V8 DSL	E-1796	HP-3002
C2500	5.7L V8 F/I	E-1796 ♦	HP-3002
C2500	6.5L V8 DSL	E-1796	HP-3002
C2500	7.4L V8 F/I	E-1796 ♦	HP-3002
C2500 Suburban	5.7L V8 F/I	E-1796 ♦	HP-3002
C2500 Suburban	6.5L V8 DSL	E-1796	HP-3002
C2500 Suburban	7.4L V8 F/I	E-1796 ♦	HP-3002
C3500	5.7L V8 F/I	E-1796 ♦	HP-3002
C3500	6.5L V8 DSL	E-1796	HP-3002
C3500	7.4L V8 F/I	E-1796 ♦	HP-3002
Jimmy	4.3L V6 F/I		HP-2001
K1500	4.3L V6 F/I	E-1796 ♦	HP-2001
K1500	5.0L V8 F/I	E-1796 ♦	HP-2001
K1500	5.7L V8 F/I	E-1796 ♦	HP-2001
K1500	6.5L V8 DSL	E-1796	HP-3002
1997 GMC			
K1500 Suburban	5.7L V8 F/I	E-1796 ♦	HP-2001
K1500 Suburban	6.5L V8 DSL	E-1796	HP-3002
K2500	5.7L V8 F/I	E-1796 ♦	HP-2001
K2500	6.5L V8 DSL	E-1796	HP-3002
K2500	7.4L V8 F/I	E-1796 ♦	HP-3002
K2500 Suburban	5.7L V8 F/I	E-1796 ♦	HP-2001
K2500 Suburban	6.5L V8 DSL	E-1796	HP-3002
K2500 Suburban	7.4L V8 F/I	E-1796 ♦	HP-3002
K3500	5.7L V8 F/I	E-1796 ♦	HP-2001
K3500	6.5L V8 DSL	E-1796	HP-3002
K3500	7.4L V8 F/I	E-1796 ♦	HP-3002
Safari Van	4.3L V6 F/I	33-2225	HP-2001
Savana 1500	5.7L V8 F/I	33-2111	HP-3002
Savana 3500	5.7L V8 F/I	33-2111	HP-3002
Sonoma	2.2L L4 F/I	33-2042 ♦	HP-1001
Sonoma	4.3L V6 F/I	33-2042 ♦	HP-2001
Yukon	5.7L V8 F/I	E-1796 ♦	
Yukon	5.7L V8 F/I - 2WD	E-1796	HP-3002
Yukon	5.7L V8 F/I - 4WD	E-1796	HP-2001
Yukon	6.5L V8 DSL	E-1796	HP-3002
1996 GMC			
C1500	4.3L V6 F/I	E-1796 ♦	HP-2001
C1500	5.0L V8 F/I	E-1796 ♦	HP-3002
C1500	5.7L V8 F/I	E-1796 ♦	HP-3002
C1500	6.5L V8 DSL	33-2062-1	HP-3002
C1500 Suburban	5.7L V8 F/I	E-1796 ♦	HP-3002
C1500 Suburban	6.5L V8 DSL	33-2062-1	HP-3002
C2500	5.0L V8 F/I	E-1796 ♦	HP-3002
C2500	5.7L V8 F/I	E-1796 ♦	HP-3002
C2500	6.5L V8 DSL	33-2062-1	HP-3002
C2500	7.4L V8 F/I	E-1796 ♦	HP-3002
C2500 Suburban	5.7L V8 F/I	E-1796 ♦	HP-3002
C2500 Suburban	6.5L V8 DSL	33-2062-1	HP-3002
C2500 Suburban	7.4L V8 F/I	E-1796 ♦	HP-3002
C3500	6.5L V8 DSL	33-2062-1	HP-3002
C3500	7.4L V8 F/I	E-1796 ♦	HP-3002
Jimmy	4.3L V6 F/I	33-2042 ♦	HP-2001
K1500	4.3L V6 F/I	E-1796 ♦	HP-2001
K1500	5.0L V8 F/I	E-1796 ♦	HP-2001
K1500	5.7L V8 F/I	E-1796 ♦	HP-2001
K1500	6.5L V8 DSL	33-2062-1	HP-3002
K1500 Suburban	5.7L V8 F/I	E-1796 ♦	HP-2001
K1500 Suburban	6.5L V8 DSL	33-2062-1	HP-3002
K2500	5.7L V8 F/I	E-1796 ♦	HP-2001
K2500	6.5L V8 DSL	33-2062-1	HP-3002
K2500	7.4L V8 F/I	E-1796 ♦	HP-3002
K2500 Suburban	5.7L V8 F/I	E-1796 ♦	HP-2001
K2500 Suburban	6.5L V8 DSL	33-2062-1	HP-3002
K2500 Suburban	7.4L V8 F/I	E-1796 ♦	HP-3002
K3500	6.5L V8 DSL	33-2062-1	HP-3002
K3500	7.4L V8 F/I	E-1796 ♦	HP-3002
Safari Van	4.3L V6 F/I	33-2225	HP-2001
Savana 1500	5.7L V8 CPI	33-2111	HP-3002
Savana 2500	5.7L V8 CPI	33-2111	HP-3002
Sonoma	2.2L L4 F/I	33-2042 ♦	HP-1001
Sonoma	4.3L V6 F/I	33-2042 ♦	HP-2001
Yukon	5.7L V8 F/I	E-1796 ♦	
Yukon	5.7L V8 F/I - 2WD	E-1796	HP-3002
Yukon	5.7L V8 F/I - 4WD	E-1796	HP-2001
Yukon	6.5L V8 DSL	33-2062-1	HP-3002
1995 GMC			
C1500	4.3L V6 F/I	E-1150	HP-2001
C1500	5.0L V8 F/I	E-1500 ♦	HP-3002

*Indicates 2 filters required ♦ - Intake kit available - see page 80 Applications updated daily at knfilters.com

AIR & OIL FILTERS

Vehicle	Engine Type	Air Filter	Oil Filter
1995 GMC			
C1500	5.7L V8 F/I	E-1500 ♦	HP-3002
C1500	6.5L V8 DSL	33-2062-1	HP-3002
C1500 Suburban	5.7L V8 F/I	E-1500 ♦	HP-3002
C1500 Suburban	6.5L V8 DSL	33-2062-1	HP-3002
C2500	5.7L V8 F/I	E-1500 ♦	HP-3002
C2500	6.5L V8 DSL	33-2062-1	HP-3002
C2500	7.4L V8 F/I	E-1500 ♦	HP-3002
C2500 Suburban	5.7L V8 F/I	E-1500 ♦	HP-3002
C2500 Suburban	6.5L V8 DSL	33-2062-1	HP-3002
C2500 Suburban	7.4L V8 F/I	E-1500 ♦	HP-3002
C3500	5.7L V8 F/I	E-1500 ♦	HP-3002
C3500	6.5L V8 DSL	33-2062-1	HP-3002
C3500	7.4L V8 F/I	E-1500 ♦	HP-3002
G2500	5.7L V8 F/I	E-1150	HP-3002
Jimmy	4.3L V6 CPI	33-2042 ♦	HP-2001
K1500	4.3L V6 F/I	E-1150	HP-2001
K1500	5.0L V8 F/I	E-1500 ♦	HP-2001
K1500	5.7L V8 F/I	E-1500 ♦	HP-2001
K1500	6.5L V8 DSL	33-2062-1	HP-3002
K1500 Suburban	5.7L V8 F/I	E-1500 ♦	HP-2001
K1500 Suburban	6.5L V8 DSL	33-2062-1	HP-3002
K2500	5.7L V8 F/I	E-1500 ♦	HP-2001
K2500	6.5L V8 DSL	33-2062-1	HP-3002
K2500	7.4L V8 F/I	E-1500 ♦	HP-3002
K2500 Suburban	5.7L V8 F/I	E-1500 ♦	HP-2001
K2500 Suburban	6.5L V8 DSL	33-2062-1	HP-3002
K2500 Suburban	7.4L V8 F/I	E-1500 ♦	HP-3002
K3500	6.5L V8 DSL	33-2062-1	HP-3002
K3500	7.4L V8 F/I	E-1500 ♦	HP-3002
Safari Van	4.3L V6 CPI	33-2042	HP-2001
Sonoma	2.2L L4 F/I	33-2042 ♦	HP-1001
Sonoma	4.3L V6 CPI	33-2042 ♦	HP-2001
Sonoma	4.3L V6 TBI	E-1065 ♦	HP-2001
Yukon	5.7L V8 F/I	E-1500 ♦	
Yukon	5.7L V8 F/I - 2WD	E-1500	HP-3002
Yukon	5.7L V8 F/I - 4WD	E-1500	HP-2001
Yukon	6.5L V8 DSL	33-2062-1	HP-3002
1994 GMC			
C1500	4.3L V6 F/I	E-1150	HP-2001
C1500	5.0L V8 F/I	E-1500 ♦	HP-3002
C1500	5.7L V8 F/I	E-1500 ♦	HP-3002
C1500 Suburban	5.7L V8 F/I	E-1500 ♦	HP-3002
C2500	5.7L V8 F/I	E-1500 ♦	HP-3002
C2500	6.5L V8 DSL - exc. Turbo	E-1690	HP-3002
C2500	6.5L V8 DSL - Turbo	33-2062-1	HP-3002
C2500	7.4L V8 F/I	E-1500 ♦	HP-3002
C2500 Suburban	5.7L V8 F/I	E-1500 ♦	HP-3002
C2500 Suburban	6.5L V8 DSL	33-2062-1	HP-3002
C2500 Suburban	7.4L V8 F/I	E-1500 ♦	HP-3002
C3500	5.7L V8 F/I	E-1500 ♦	HP-3002
C3500	6.5L V8 DSL	33-2062-1	HP-3002
C3500	7.4L V8 F/I	E-1500 ♦	HP-3002
G1500	5.0L V8 F/I	E-1150	HP-3002
G2500	5.7L V8 F/I	E-1150	HP-3002
G3500	7.4L V8 F/I	E-1500	HP-3002
Jimmy	4.3L V6 CPI	33-2042	HP-2001
Jimmy	4.3L V6 TBI	E-1065 ♦	HP-2001
K1500	4.3L V6 F/I	E-1150	HP-2001
K1500	5.0L V8 F/I	E-1500 ♦	HP-2001
K1500	5.7L V8 F/I	E-1500 ♦	HP-2001
K1500	6.5L V8 DSL - exc. Turbo	E-1690	HP-3002
K1500	6.5L V8 DSL - Turbo	33-2062-1	HP-3002

Vehicle	Engine Type	Air Filter	Oil Filter
1994 GMC			
K1500 Suburban	5.7L V8 F/I	E-1500 ♦	HP-2001
K2500	5.7L V8 F/I	E-1500 ♦	HP-2001
K2500	6.5L V8 DSL - exc. Turbo	E-1690	HP-3002
K2500	6.5L V8 DSL - Turbo	33-2062-1	HP-3002
K2500	7.4L V8 F/I	E-1500 ♦	HP-3002
K2500 Suburban	5.7L V8 F/I	E-1500 ♦	HP-2001
K2500 Suburban	6.5L V8 DSL	33-2062-1	HP-3002
K2500 Suburban	7.4L V8 F/I	E-1500 ♦	HP-3002
K3500	6.5L V8 DSL	33-2062-1	HP-3002
K3500	7.4L V8 F/I	E-1500 ♦	HP-3002
Safari Van	4.3L V6 CPI	33-2042	HP-2001
Safari Van	4.3L V6 TBI	E-1065	HP-2001
Sonoma	2.2L L4 F/I	33-2042 ♦	HP-1001
Sonoma	4.3L V6 CPI	33-2042 ♦	HP-2001
Sonoma	4.3L V6 TBI	E-1065 ♦	HP-2001
Yukon	5.7L V8 F/I	E-1500 ♦	
Yukon	5.7L V8 F/I - 2WD	E-1500	HP-3002
Yukon	5.7L V8 F/I - 4WD	E-1500	HP-2001
1993 GMC			
C1500	4.3L V6 F/I	E-1150	HP-2001
C1500	5.0L V8 F/I	E-1500 ♦	HP-3002
C1500	5.7L V8 F/I	E-1500 ♦	HP-3002
C1500	6.2L V8 DSL	E-1690	HP-3002
C1500 Suburban	5.7L V8 F/I	E-1500 ♦	HP-3002
C2500	5.7L V8 F/I	E-1500 ♦	HP-3002
C2500 Suburban	5.7L V8 F/I	E-1500 ♦	HP-3002
C2500 Suburban	7.4L V8 F/I	E-1500 ♦	HP-3002
C3500	6.5L V8 DSL	33-2062-1	HP-3002
C3500	7.4L V8 F/I	E-1500 ♦	HP-3002
Jimmy	4.3L V6 CPI	33-2042	HP-2001
Jimmy	4.3L V6 TBI	E-1065 ♦	HP-2001
K1500	4.3L V6 F/I	E-1150	HP-2001
K1500	5.0L V8 F/I	E-1500 ♦	HP-2001
K1500	5.7L V8 F/I	E-1500 ♦	HP-2001
K1500	6.2L V8 DSL	E-1690	HP-3002
K1500 Suburban	5.7L V8 F/I	E-1500 ♦	HP-2001
K2500	5.7L V8 F/I	E-1500 ♦	HP-2001
K2500	6.5L V8 DSL	33-2062-1	HP-3002
K2500	7.4L V8 F/I	E-1500 ♦	HP-3002
K2500 Suburban	5.7L V8 F/I	E-1500 ♦	HP-3002
K2500 Suburban	7.4L V8 F/I	E-1500 ♦	HP-3002
K3500	6.5L V8 DSL	33-2062-1	HP-3002
Safari Van	4.3L V6 CPI	E-1065	HP-2001
Safari Van	4.3L V6 TBI	33-2042	HP-2001
Sonoma	2.5L L4 F/I	E-1015	HP-1001
Sonoma	2.8L V6 F/I	E-1065	HP-2001
Sonoma	4.3L V6 CPI	33-2042	HP-2001
Sonoma	4.3L V6 TBI	E-1065 ♦	HP-2001
Typhoon Truck	4.3L V6 F/I	33-2042	HP-2001
Yukon	5.7L V8 F/I	E-1500 ♦	
Yukon	5.7L V8 F/I - 2WD	E-1500	HP-3002
Yukon	5.7L V8 F/I - 4WD	E-1500	HP-2001
1992 GMC			
C1500	4.3L V6 F/I	E-1150	HP-2001
C1500	5.0L V8 F/I	E-1500 ♦	HP-3002
C1500	5.7L V8 F/I	E-1500 ♦	HP-3002
C1500 Suburban	5.7L V8 F/I	E-1500 ♦	HP-3002
C2500	5.7L V8 F/I	E-1500 ♦	HP-3002
C2500 Suburban	5.7L V8 F/I	E-1500 ♦	HP-3002
C3500	5.7L V8 F/I	E-1500 ♦	HP-3002
G2500	5.7L V8 F/I	E-1150	HP-3002
Jimmy	4.3L V6 CPI	33-2042	HP-2001

*Indicates 2 filters required ♦ - Intake kit available - see page 80 Applications updated daily at knfilters.com

Partial Listing - Complete List of Vehicles and Applications at knfilters.com

Vehicle	Engine Type	Air Filter	Oil Filter
1992 GMC			
Jimmy	4.3L V6 TBI	E-1065 ♦	HP-2001
K1500	4.3L V6 F/I	E-1150	HP-2001
K1500	5.0L V8 F/I	E-1500 ♦	HP-2001
K1500	5.7L V8 F/I	E-1500 ♦	HP-2001
K1500 Suburban	5.7L V8 F/I	E-1500 ♦	HP-2001
K2500	5.7L V8 F/I	E-1500 ♦	HP-2001
K2500	6.5L V8 DSL	33-2062-1	HP-3002
K2500	7.4L V8 F/I	E-1500 ♦	HP-3002
K2500 Suburban	5.7L V8 F/I	E-1500 ♦	HP-2001
K2500 Suburban	7.4L V8 F/I	E-1500 ♦	HP-3002
K3500	7.4L V8 F/I	E-1500 ♦	HP-3002
Safari Van	4.3L V6 CPI	33-2042	HP-2001
Safari Van	4.3L V6 TBI	E-1065	HP-2001
Sonoma	2.8L V6 F/I	E-1065	HP-2001
Sonoma	4.3L V6 CPI	33-2042	HP-2001
Sonoma	4.3L V6 TBI	E-1065 ♦	HP-2001
Typhoon Truck	4.3L V6 F/I	33-2042	HP-2001
Yukon	5.7L V8 F/I	E-1500 ♦	
Yukon	5.7L V8 F/I - 2WD	E-1500	HP-3002
Yukon	5.7L V8 F/I - 4WD	E-1500	HP-2001
1991 GMC			
C1500	4.3L V6 F/I	E-1150	HP-2001
C1500	5.0L V8 F/I	E-1500 ♦	HP-3002
C1500	5.7L V8 F/I	E-1500 ♦	HP-3002
C2500	5.7L V8 F/I	E-1500 ♦	HP-3002
C2500	7.4L V8 F/I		HP-3002
C3500	7.4L V8 F/I		HP-3002
C3500	7.4L V8 F/I - 3-7/16 in tall filter	E-1500 ♦	HP-3002
C3500	7.4L V8 F/I - 5-1/2 in tall filter	E-1420 ♦	HP-3002
G3500	5.7L V8 F/I	E-1150	HP-3002
Jimmy	5.7L V8 F/I	E-1500 ♦	HP-3002
K1500	5.0L V8 F/I	E-1500 ♦	HP-2001
K1500	5.7L V8 F/I	E-1500 ♦	HP-2001
K1500	6.2L V8 DSL	E-1690	HP-3002
K2500	5.7L V8 F/I	E-1500 ♦	HP-2001
S15 Jimmy	4.3L V6 TBI	E-1065 ♦	HP-2001
Sonoma	2.5L L4 F/I	E-1015	HP-1001
Sonoma	2.8L V6 F/I	E-1065	HP-2001
Sonoma	4.3L V6 TBI	E-1065 ♦	HP-2001
Syclone	4.3L V6 F/I	33-2042	HP-2001
1990 GMC			
C1500	4.3L V6 F/I	E-1150	HP-2001
C1500	5.0L V8 F/I	E-1500 ♦	HP-3002
C1500	5.7L V8 F/I	E-1500 ♦	HP-3002
C2500	5.7L V8 F/I	E-1500 ♦	HP-3002
G1500	5.7L V8 F/I	E-1150	HP-3002
Jimmy	5.7L V8 F/I	E-1500 ♦	HP-3002
K1500	4.3L V6 F/I	E-1150	HP-2001
K1500	5.0L V8 F/I	E-1500 ♦	HP-2001
K1500	5.7L V8 F/I	E-1500 ♦	HP-2001
K2500	5.7L V8 F/I	E-1500 ♦	HP-2001
R1500 Suburban	5.7L V8 F/I	E-1500 ♦	HP-3002
S15 Jimmy	4.3L V6 TBI	E-1065 ♦	HP-2001
S15 Pickup	2.5L L4 F/I	E-1015	HP-1001
S15 Pickup	4.3L V6 TBI	E-1065 ♦	HP-2001
V1500 Suburban	5.7L V8 F/I	E-1500 ♦	HP-3002
1989 GMC			
C1500	4.3L V6 F/I	E-1150	HP-2001
C1500	5.0L V8 F/I	E-1500 ♦	HP-3002
C1500	5.7L V8 F/I	E-1500 ♦	HP-3002
C2500	5.7L V8 F/I	E-1500 ♦	HP-3002

Vehicle	Engine Type	Air Filter	Oil Filter
1989 GMC			
C3500	7.4L V8 F/I		HP-3002
C3500	7.4L V8 F/I - 3-7/16 in tall filter	E-1500 ♦	HP-3002
C3500	7.4L V8 F/I - 5-1/2 in tall filter	E-1420 ♦	HP-3002
Jimmy	5.7L V8 F/I	E-1500 ♦	HP-2001
K1500	5.0L V8 F/I	E-1500 ♦	HP-2001
K1500	5.7L V8 F/I	E-1500 ♦	HP-2001
K2500	5.7L V8 F/I	E-1500 ♦	HP-3002
R1500 Suburban	5.7L V8 F/I	E-1500 ♦	HP-3002
S15 Jimmy	4.3L V6 TBI	E-1065 ♦	HP-2001
S15 Pickup	2.8L V6 F/I	E-1065	
S15 Pickup	2.8L V6 F/I - 2WD	E-1065	HP-2001
S15 Pickup	2.8L V6 F/I - 4WD	E-1065	HP-1001
S15 Pickup	4.3L V6 TBI	E-1065 ♦	HP-2001
V1500 Suburban	5.7L V8 F/I	E-1500 ♦	HP-3002
1988 GMC			
C1500	5.0L V8 F/I	E-1500 ♦	HP-3002
C1500	5.7L V8 F/I	E-1500 ♦	HP-3002
C2500	5.7L V8 F/I	E-1500 ♦	HP-3002
C2500	6.2L V8 DSL	E-1690	HP-3002
C3500	7.4L V8 F/I		HP-3002
C3500	7.4L V8 F/I - 3-7/16 in tall filter	E-1500 ♦	HP-3002
G2500	5.7L V8 F/I	E-1150	HP-3002
K1500	5.0L V8 F/I	E-1500 ♦	HP-2001
K1500	5.7L V8 F/I	E-1500 ♦	HP-2001
K2500	5.7L V8 F/I	E-1500 ♦	HP-2001
K3500	7.4L V8 F/I		HP-3002
K3500	7.4L V8 F/I - 3-7/16 in tall filter	E-1500 ♦	HP-3002
K3500	7.4L V8 F/I - 5-1/2 in tall filter	E-1420 ♦	HP-3002
R1500 Suburban	5.7L V8 F/I	E-1500 ♦	HP-3002
S15 Jimmy	2.8L V6 F/I	E-1065	
S15 Jimmy	2.8L V6 F/I - 4WD	E-1065	HP-1001
S15 Jimmy	4.3L V6 F/I	E-1065 ♦	HP-2001
S15 Pickup	2.8L V6 F/I	E-1065	
S15 Pickup	4.3L V6 F/I	E-1065 ♦	HP-2001
V1500 Suburban	5.7L V8 F/I	E-1500 ♦	HP-3002
1987 GMC			
Caballero	5.0L V8 CARB	E-1500	HP-2002
G1500	5.0L V8 F/I	E-1150	HP-3002
G1500	5.7L V8 F/I	E-1150	HP-3002
Jimmy	5.7L V8 F/I	E-1500	HP-3002
R1500	5.0L V8 F/I	E-1500	HP-3002
R1500	5.7L V8 F/I	E-1500	HP-3002
R1500 Suburban	5.0L V8 F/I	E-1500	HP-3002
R1500 Suburban	5.7L V8 F/I	E-1500	HP-3002
R2500	7.4L V8 F/I		HP-3002
R2500	7.4L V8 F/I - 3-7/16 in tall filter	E-1500	HP-3002
R2500 Suburban	7.4L V8 F/I		HP-3002
R2500 Suburban	7.4L V8 F/I - 3-7/16 in tall filter	E-1500	HP-3002
R3500	7.4L V8 CARB		HP-3002
R3500	7.4L V8 CARB - 3-7/16 in tall filter	E-1500	HP-3002
R3500	7.4L V8 F/I		HP-3002
R3500	7.4L V8 F/I - 3-7/16 in tall filter	E-1500	HP-3002
S15 Jimmy	2.8L V6 F/I	E-1065	
S15 Pickup	2.8L V6 F/I	E-1065	
S15 Pickup	2.8L V6 F/I - 2WD	E-1065	HP-2001
S15 Pickup	2.8L V6 F/I - 4WD	E-1065	HP-1001
V1500	5.0L V8 F/I	E-1500	HP-3002
V1500	5.7L V8 F/I	E-1500	HP-3002

*Indicates 2 filters required ♦ - Intake kit available - see page 80 Applications updated daily at knfilters.com

AIR & OIL FILTERS

Vehicle	Engine Type	Air Filter	Oil Filter
1987 GMC			
V1500 Suburban	5.7L V8 F/I	E-1500	HP-3002
1986 GMC			
C1500	4.3L V6 CARB	E-1500	HP-2001
C1500	5.0L V8 CARB		HP-3002
C1500	5.0L V8 CARB - 3-7/16 in tall filter	E-1500	HP-3002
C1500	5.0L V8 CARB - 5-1/2 in tall filter	E-1420	HP-3002
C1500	5.7L V8 CARB	E-1420	HP-3002
C1500 Suburban	5.0L V8 CARB	E-1420	HP-3002
C1500 Suburban	5.7L V8 CARB	E-1420	HP-3002
C2500	5.7L V8 CARB	E-1420	HP-3002
C2500 Suburban	5.7L V8 CARB	E-1420	HP-3002
C2500 Suburban	7.4L V8 CARB		HP-3002
C2500 Suburban	7.4L V8 CARB - 3-7/16 in tall filter	E-1500	HP-3002
C2500 Suburban	7.4L V8 CARB - 5-1/2 in tall filter	E-1420	HP-3002
C3500	7.4L V8 CARB	E-1420	HP-3002
Jimmy	5.7L V8 CARB	E-1420	HP-3002
K1500	5.0L V8 CARB		HP-3002
K1500	5.0L V8 CARB - 3-7/16 in tall filter	E-1500	HP-3002
K1500	5.0L V8 CARB - 5-1/2 in tall filter	E-1420	HP-3002
K1500	5.7L V8 CARB	E-1420	HP-3002
K1500 Suburban	5.7L V8 CARB	E-1420	HP-3002
K2500	5.7L V8 CARB	E-1420	HP-3002
K2500 Suburban	5.7L V8 CARB	E-1420	HP-3002
S15 Pickup	2.8L V6 F/I	E-1065	HP-1001
1985 GMC			
C1500	5.0L V8 CARB		HP-3002
C1500	5.0L V8 CARB - 3-7/16 in tall filter	E-1500	HP-3002
C1500	5.0L V8 CARB - 5-1/2 in tall filter	E-1420	HP-3002
C1500	5.7L V8 CARB		HP-3002
C1500	5.7L V8 CARB - 3-7/16 in tall filter	E-1500	HP-3002
C1500	5.7L V8 CARB - 5-1/2 in tall filter	E-1420	HP-3002
C1500 Suburban	5.0L V8 CARB	E-1420	HP-3002
C1500 Suburban	5.7L V8 CARB	E-1420	HP-3002
C2500	5.7L V8 CARB		HP-3002
C2500 Suburban	5.7L V8 CARB	E-1420	HP-3002
C2500 Suburban	7.4L V8 CARB		HP-3002
C2500 Suburban	7.4L V8 CARB - 3-7/16 in tall filter	E-1500	HP-3002
C3500	7.4L V8 CARB		HP-3002
C3500	7.4L V8 CARB - 3-7/16 in tall filter	E-1500	HP-3002
C3500	7.4L V8 CARB - 5-1/2 in tall filter	E-1420	HP-3002
Caballero	5.0L V8 CARB	E-1500	HP-2002
K1500	5.0L V8 CARB		HP-3002
K1500	5.0L V8 CARB - 3-7/16 in tall filter	E-1500	HP-3002
K1500	5.0L V8 CARB - 5-1/2 in tall filter	E-1420	HP-3002
K1500	5.7L V8 CARB		HP-3002
K1500	5.7L V8 CARB - 3-7/16 in tall filter	E-1500	HP-3002
K1500	5.7L V8 CARB - 5-1/2 in tall filter	E-1420	HP-3002
K1500 Suburban	5.0L V8 CARB	E-1420	HP-3002
K1500 Suburban	5.7L V8 CARB	E-1420	HP-3002
K2500	5.7L V8 CARB		HP-3002
K2500	5.7L V8 CARB - 3-7/16 in tall filter	E-1500	HP-3002
K2500	5.7L V8 CARB - 5-1/2 in tall filter	E-1420	HP-3002
1985 GMC			
K2500 Suburban	5.7L V8 CARB	E-1420	HP-3002
S15 Jimmy	2.8L V6 CARB	E-1035	
S15 Pickup	2.8L V6 CARB	E-1035	
S15 Pickup	2.8L V6 CARB - 2WD	E-1035	HP-2001
S15 Pickup	2.8L V6 CARB - 4WD	E-1035	HP-1001
1984 GMC			
C1500	4.1L L6 CARB	E-1030	HP-2002
C1500	5.0L V8 CARB	E-1420	HP-3002
C1500	5.7L V8 CARB		HP-3002
C1500	5.7L V8 CARB - 3-7/16 in tall filter	E-1500	HP-3002
C1500	5.7L V8 CARB - 5-1/2 in tall filter	E-1420	HP-3002
C1500 Suburban	5.0L V8 CARB	E-1420	HP-3002
C1500 Suburban	5.7L V8 CARB	E-1420	HP-3002
Jimmy	5.7L V8 CARB		HP-3002
K1500	5.7L V8 CARB		HP-3002
K1500	5.7L V8 CARB - 3-7/16 in tall filter	E-1500	HP-3002
K1500	5.7L V8 CARB - 5-1/2 in tall filter	E-1420	HP-3002
K1500 Suburban	5.7L V8 CARB	E-1420	HP-3002
K2500	5.7L V8 CARB		HP-3002
K2500	5.7L V8 CARB - 3-7/16 in tall filter	E-1500	HP-3002
K2500	5.7L V8 CARB - 5-1/2 in tall filter	E-1420	HP-3002
K2500 Suburban	5.7L V8 CARB	E-1420	HP-3002
K3500	7.4L V8 CARB		HP-3002
K3500	7.4L V8 CARB - 3-7/16 in tall filter	E-1500	HP-3002
S15 Pickup	2.8L V6 CARB	E-1035	HP-1001
1983 GMC			
C1500	5.7L V8 CARB - 2qt. spin on		HP-6002
C1500	5.7L V8 CARB - 3-7/16 in tall filter	E-1500	
C1500	5.7L V8 CARB - 5-1/2 in tall filter	E-1420	
C1500	5.7L V8 CARB - w/o 2qt. spin on		HP-3002
C1500 Suburban	5.7L V8 CARB	E-1420	HP-3002
K1500	5.7L V8 CARB - 3-7/16 in tall filter	E-1500	
K1500	5.7L V8 CARB - w/o 2qt. spin on		HP-3002
K1500 Suburban	5.7L V8 CARB	E-1420	HP-3002
1982 GMC			
C1500	5.0L V8 CARB	E-1420	HP-3002
C1500	6.2L V8 DSL	E-1690	HP-3002
C1500 Suburban	5.0L V8 CARB	E-1420	HP-3002
C1500 Suburban	6.2L V8 DSL	E-1690	HP-3002
K1500	5.7L V8 CARB - w/o 2qt. spin on		HP-3002
K1500 Suburban	5.7L V8 CARB - w/o 2qt. spin on		HP-3002
1981 GMC			
C1500	5.7L V8 CARB	E-1420	
C1500	5.7L V8 CARB - 2qt. spin on	E-1420	HP-6002
C1500	5.7L V8 CARB - w/o 2qt. spin on	E-1420	HP-3002
C1500	5.7L V8 DSL	E-1690	HP-2006
C1500 Suburban	5.7L V8 CARB	E-1420	HP-3002
C1500 Suburban	5.7L V8 DSL	E-1690	HP-2006
1980 GMC			
C1500	305 V8 CARB	E-1150	HP-3002
C1500	350 V8 CARB		HP-3002

*Indicates 2 filters required ♦ - Intake kit available - see page 80 Applications updated daily at knfilters.com

Partial Listing - Complete List of Vehicles and Applications at knfilters.com

Vehicle	Engine Type	Air Filter	Oil Filter
1980 GMC			
C1500	350 V8 CARB - 3-7/16 in tall filter	E-1500	HP-3002
C1500	350 V8 DSL	E-1690	HP-2006
C1500 Suburban	305 V8 CARB	E-1150	HP-3002
C1500 Suburban	350 V8 CARB		HP-3002
C1500 Suburban	350 V8 CARB - 3-7/16 in tall filter	E-1500	HP-3002
C1500 Suburban	350 V8 DSL	E-1690	HP-2006
K1500	350 V8 CARB		HP-3002
K1500	350 V8 CARB - 3-7/16 in tall filter	E-1500	HP-3002
K1500	350 V8 CARB - 5-1/2 in tall filter	E-1420	HP-3002
K1500 Suburban	350 V8 CARB		HP-3002
K1500 Suburban	350 V8 CARB - 3-7/16 in tall filter	E-1500	HP-3002
K1500 Suburban	350 V8 CARB - 5-1/2 in tall filter	E-1420	HP-3002
1979 GMC			
C1500	350 V8 CARB	E-1450	
C1500	350 V8 CARB - 2qt. spin on	E-1450	HP-6002
C1500	350 V8 CARB - w/o 2qt. spin on	E-1450	HP-3002
C1500	350 V8 DSL	E-1690	HP-2006
C1500 Suburban	350 V8 CARB	E-1500	
C1500 Suburban	350 V8 CARB - w/o 2qt. spin on	E-1500	HP-3002
C1500 Suburban	350 V8 DSL	E-1690	HP-2006
Jimmy	350 V8 CARB	E-1500	
Jimmy	350 V8 CARB - w/o 2qt. spin on	E-1500	HP-3002
K1500	350 V8 CARB	E-1450	
K1500	350 V8 CARB - 2qt. spin on	E-1450	HP-6002
K1500	350 V8 CARB - w/o 2qt. spin on	E-1450	HP-3002
K1500 Suburban	350 V8 CARB	E-1500	
K1500 Suburban	350 V8 CARB - w/o 2qt. spin on	E-1500	HP-3002
K2500	350 V8 CARB	E-1450	
K2500	350 V8 CARB - 2qt. spin on	E-1450	HP-6002
K2500	350 V8 CARB - w/o 2qt. spin on	E-1450	HP-3002
K2500 Suburban	350 V8 CARB	E-1500	
K2500 Suburban	350 V8 CARB - w/o 2qt. spin on	E-1500	HP-3002
1978 GMC			
C15	350 V8 CARB	E-1500	HP-3002
C15	350 V8 DSL	E-1690	HP-2003
C15 Suburban	350 V8 CARB	E-1500	HP-3002
C15 Suburban	350 V8 DSL	E-1690	HP-2003
Jimmy	350 V8 CARB	E-1500	HP-3002
K15	350 V8 CARB	E-1500	HP-3002
K15	400 V8 CARB	E-1500	HP-3002
K15 Suburban	350 V8 CARB	E-1500	HP-3002
K15 Suburban	400 V8 CARB	E-1500	HP-3002
K25	454 V8 CARB	E-1500	
K25	454 V8 CARB - 2qt. spin on	E-1500	HP-6002
K25	454 V8 CARB - w/o 2qt. spin on	E-1500	HP-3002
1977 GMC			
C15	350 V8 CARB	E-1500	
C15	350 V8 CARB - 2qt. spin on	E-1500	HP-6002
C15	350 V8 CARB - w/o 2qt. spin on	E-1500	HP-3002
C15 Suburban	350 V8 CARB	E-1500	
C15 Suburban	350 V8 CARB - w/o 2qt. spin on	E-1500	HP-3002
K15	350 V8 CARB	E-1500	
K15	350 V8 CARB - 2qt. spin on	E-1500	HP-6002
K15	350 V8 CARB - w/o 2qt. spin on	E-1500	HP-3002
K15 Suburban	350 V8 CARB	E-1500	
K15 Suburban	350 V8 CARB - w/o 2qt. spin on	E-1500	HP-3002
1976 GMC			
C15	350 V8 CARB	E-1500	
C15	350 V8 CARB - w/o 2qt. spin on	E-1500	HP-3002
C15 Suburban	350 V8 CARB	E-1500	
C15 Suburban	350 V8 CARB - w/o 2qt. spin on	E-1500	HP-3002
K15	350 V8 CARB - w/o 2qt. spin on		HP-3002
K15 Suburban	350 V8 CARB - w/o 2qt. spin on		HP-3002
Motorhome	350 V8 4 BBL. - Class A, 1/4 inch taller than stock	E-3679	
Motorhome	455 V8 4 BBL. - Class C	E-1650	
1975 GMC			
C15	350 V8 2 BBL. - w/o 2qt. spin on		HP-3002
C15	350 V8 4 BBL.	E-1500	
C15	350 V8 4 BBL. - w/o 2qt. spin on	E-1500	HP-3002
C15	454 V8 CARB	E-1500	
C15	454 V8 CARB - w/o 2qt. spin on	E-1500	HP-3002
C15 Suburban	350 V8 2 BBL. - w/o 2qt. spin on		HP-3002
C15 Suburban	350 V8 4 BBL.	E-1500	
C15 Suburban	350 V8 4 BBL. - w/o 2qt. spin on	E-1500	HP-3002
C15 Suburban	454 V8 CARB	E-1500	
C15 Suburban	454 V8 CARB - w/o 2qt. spin on	E-1500	HP-3002
1974 GMC			
K35/K3500 Pickup	454 V8 CARB	E-1500	
K35/K3500 Pickup	454 V8 CARB - w/o 2qt. spin on	E-1500	HP-3002
1973 GMC			
C15/C1500 Pickup	350 V8 CARB	E-1500	
C15/C1500 Pickup	350 V8 CARB - 2qt. spin on	E-1500	HP-6002
C15/C1500 Pickup	350 V8 CARB - w/o 2qt. spin on	E-1500	HP-3002
1972 GMC			
C15/C1500 Pickup	350 V8 2 BBL.	E-1450	HP-3002
C15/C1500 Pickup	350 V8 4 BBL.	E-1500	HP-3002
C15/C1500 Pickup	402 V8 CARB	E-1450	HP-3002
C25/C2500 Pickup	350 V8 CARB	E-1500	HP-3002
C25/C2500 Pickup	402 V8 CARB	E-1500	HP-3002
K15/K1500 Pickup	350 V8 2 BBL.	E-1450	HP-3002
K15/K1500 Pickup	350 V8 4 BBL.	E-1500	HP-3002
K25/K2500 Pickup	350 V8 2 BBL.	E-1450	HP-3002
K25/K2500 Pickup	350 V8 4 BBL.	E-1500	HP-3002
1971 GMC			
C15/C1500 Pickup	350 V8 2 BBL.	E-1450	
C15/C1500 Pickup	350 V8 2 BBL. - w/o 2qt. spin on	E-1450	HP-3002
C15/C1500 Pickup	350 V8 4 BBL.	E-1500	
C15/C1500 Pickup	350 V8 4 BBL. - w/o 2qt. spin on	E-1500	HP-3002

AIR & OIL FILTERS

Vehicle	Engine Type	Air Filter	Oil Filter
1971 GMC			
Sprint Truck	454 V8 CARB		HP-3002
1970 GMC			
C15/C1500 Pickup	307 V8 CARB	E-1150	HP-2002
C15/C1500 Pickup	350 V8 CARB	E-1450	
C15/C1500 Pickup	350 V8 CARB - 2qt. spin on	E-1450	HP-6002
C15/C1500 Pickup	350 V8 CARB - w/o 2qt. spin on	E-1450	HP-3002
1969 GMC			
K15/K1500 Pickup	396 V8 CARB	E-1650	HP-3002
2013 HARLEY DAVIDSON			
FLD Dyna Switchback	103 CI	HD-9608	KN-171B
		HD-9608	KN-171C
FLHR Road King	103 CI	HD-1508	KN-171B
		HD-1508	KN-171C
FLHRC Road King Classic	103 CI	HD-1508	KN-171B
		HD-1508	KN-171C
FLHTC Electra Glide Classic	103 CI	HD-1508	KN-171B
		HD-1508	KN-171C
FLHTCUSE CVO Ultra Classic Electra Glide	110 CI	HD-0910	KN-171B
		HD-0910	KN-171C
FLHTK Electra Glide Ultra Limited	103 CI	HD-1508	
FLHX Street Glide	103 CI	HD-1508	KN-171B
		HD-1508	KN-171C
FLS Softail Slim	103 CI	HD-1611	
FLSTC Heritage Softail Classic	103 CI	HD-1499	KN-171B
		HD-1499	KN-171C
FLSTF Fat Boy	103 CI	HD-1499	KN-171B
		HD-1499	KN-171C
FLSTFB Softail Fat Boy Lo	103 CI	HD-1499	KN-171B
		HD-1499	KN-171C
FLTRX Road Glide Custom	103 CI	HD-1508	KN-171B
		HD-1508	KN-171C
FXDB Dyna Street Bob	96 CI	HD-9608	KN-171B
		HD-9608	KN-171C
FXDC Dyna Super Glide Custom	96 CI	HD-9608	KN-171B
		HD-9608	KN-171C
FXDF Fat Bob	103 CI	HD-9608	KN-171B
		HD-9608	KN-171C
FXDWG Dyna Wide Glide	103 CI	HD-9608	KN-171B
		HD-9608	KN-171C
VRSCDX Night Rod Special	76 CI	HD-1102	
VRSCF V-Rod Muscle	76 CI	HD-1102	
XL883L SuperLow	54 CI	HD-8834	KN-170
		HD-8834	KN-170C
2013 HARLEY DAVIDSON			
XL883N Iron	54 CI	HD-8834	KN-170
		HD-8834	KN-170C
XL1200C Sportster Custom	74 CI	HD-8834	KN-170
		HD-8834	KN-170C
XL1200X Forty-Eight	74 CI	HD-8834	KN-170
		HD-8834	KN-170C
2012 HARLEY DAVIDSON			
FLD Dyna Switchback	103 CI	HD-9608	KN-171B
		HD-9608	KN-171C
FLHR Road King	103 CI	HD-1508	KN-171B
		HD-1508	KN-171C
FLHRC Road King Classic	103 CI	HD-1508	KN-171B
		HD-1508	KN-171C
FLHTC Electra Glide Classic	103 CI	HD-1508	KN-171B
		HD-1508	KN-171C
FLHTCU Ultra Classic Electra Glide	103 CI	HD-1508	KN-171B
		HD-1508	KN-171C
FLHTCUSE CVO Ultra Classic Electra Glide	110 CI	HD-0910	KN-171B
		HD-0910	KN-171C
FLHTCUTG Tri-Glide Ultra Classic	103 CI	HD-1508	KN-171B
		HD-1508	KN-171C
FLHTK Electra Glide Ultra Limited	103 CI	HD-1508	KN-171B
		HD-1508	KN-171C
FLHX Street Glide	103 CI	HD-1508	KN-171B
		HD-1508	KN-171C
FLHXSE CVO Street Glide	110 CI	HD-0910	KN-171B
		HD-0910	KN-171C
FLS Softail Slim	103 CI	HD-1611	
FLSTC Heritage Softail Classic	103 CI	HD-1499	KN-171B
		HD-1499	KN-171C
FLSTF Fat Boy	103 CI	HD-1499	KN-171B
		HD-1499	KN-171C
FLSTFB Softail Fat Boy Lo	103 CI	HD-1499	KN-171B
		HD-1499	KN-171C
FLSTN Softail Deluxe	103 CI	HD-1499	KN-171B
		HD-1499	KN-171C
FLSTSE CVO Softail Convertible	110 CI	HD-0910	KN-171B
		HD-0910	KN-171C
FLTRU Road Glide Ultra	103 CI	HD-1508	KN-171B
		HD-1508	KN-171C
FLTRX Road Glide Custom	103 CI	HD-1508	KN-171B

*Indicates 2 filters required ♦ - Intake kit available - see page 80 Applications updated daily at knfilters.com

Partial Listing - Complete List of Vehicles and Applications at knfilters.com

2012 HARLEY DAVIDSON

Vehicle	Engine Type	Air Filter	Oil Filter
FLTRX Road Glide Custom	103 CI	HD-1508	KN-171C
FLTRXSE CVO Road Glide Custom	96 CI		KN-171B
			KN-171C
FXDB Dyna Street Bob	96 CI	HD-9608	KN-171B
		HD-9608	KN-171C
FXDC Dyna Super Glide Custom	96 CI	HD-9608	KN-171B
		HD-9608	KN-171C
FXDF Fat Bob	103 CI	HD-9608	KN-171B
		HD-9608	KN-171C
FXDWG Dyna Wide Glide	103 CI	HD-9608	KN-171B
		HD-9608	KN-171C
FXS Blackline	103 CI	HD-1611	KN-171B
		HD-1611	KN-171C
VRSCDX 10th Anniversary Edition	76 CI	HD-1102	
VRSCDX Night Rod Special	76 CI	HD-1102	
VRSCF V-Rod Muscle	76 CI	HD-1102	
XL883L SuperLow	54 CI	HD-8834	KN-170
		HD-8834	KN-170C
XL883N Iron	54 CI	HD-8834	KN-170
		HD-8834	KN-170C
XL883R Sportster Roadster	54 CI		KN-170
			KN-170C
XL1200C Sportster Custom	74 CI	HD-8834	KN-170
		HD-8834	KN-170C
XL1200N Sportster Nightster	74 CI	HD-8834	KN-170
		HD-8834	KN-170C
XL1200X Forty-Eight	74 CI	HD-8834	KN-170
		HD-8834	KN-170C
XR1200X Sportster	74 CI	HD-1208	KN-170
		HD-1208	KN-170C

2011 HARLEY DAVIDSON

Vehicle	Engine Type	Air Filter	Oil Filter
FLHR Road King	96 CI	HD-1508	KN-171B
		HD-1508	KN-171C
FLHRC Road King Classic	103 CI	HD-1508	KN-171B
		HD-1508	KN-171C
FLHTC Electra Glide Classic	96 CI	HD-1508	KN-171B
		HD-1508	KN-171C
FLHTCU Ultra Classic Electra Glide	96 CI	HD-1508	KN-171B
		HD-1508	KN-171C
FLHTCUSE CVO Ultra Classic Electra Glide	110 CI	HD-0910	KN-171B
		HD-0910	KN-171C

2011 HARLEY DAVIDSON

Vehicle	Engine Type	Air Filter	Oil Filter
FLHTCUTG Tri-Glide Ultra Classic	96 CI	HD-1508	KN-171B
		HD-1508	KN-171C
FLHTK Electra Glide Ultra Limited	103 CI	HD-1508	KN-171B
		HD-1508	KN-171C
FLHX Street Glide	96 CI	HD-1508	KN-171B
		HD-1508	KN-171C
FLHXSE CVO Street Glide	110 CI	HD-0910	KN-171B
		HD-0910	KN-171C
FLHXXX Street Glide Trike	103 CI	HD-1508	KN-171B
		HD-1508	KN-171C
FLSTC Heritage Softail Classic	96 CI	HD-1499	KN-171B
		HD-1499	KN-171C
FLSTF Fat Boy	96 CI	HD-1499	KN-171B
		HD-1499	KN-171C
FLSTFB Softail Fat Boy Lo	96 CI	HD-1499	KN-171B
		HD-1499	KN-171C
FLSTN Softail Deluxe	96 CI	HD-1499	KN-171B
		HD-1499	KN-171C
FLSTSB Softail Cross Bones	96 CI	HD-1611	KN-171B
		HD-1611	KN-171C
FLSTSE CVO Softail Convertible	110 CI	HD-0910	KN-171B
		HD-0910	KN-171C
FLTRU Road Glide Ultra	103 CI	HD-1508	KN-171B
		HD-1508	KN-171C
FLTRUSE CVO Road Glide Ultra	110 CI	HD-0910	KN-171B
		HD-0910	KN-171C
FLTRX Road Glide Custom	96 CI	HD-1508	KN-171B
		HD-1508	KN-171C
FXCWC Rocker C	96 CI	HD-1499	KN-171B
		HD-1499	KN-171C
FXDB Dyna Street Bob	96 CI	HD-9608	KN-171B
		HD-9608	KN-171C
FXDC Dyna Super Glide Custom	96 CI	HD-9608	KN-171B
		HD-9608	KN-171C
FXDF Fat Bob	96 CI	HD-9608	KN-171B
		HD-9608	KN-171C
FXDFSE2 CVO Dyno Fat Bob	96 CI		KN-171B
			KN-171C
FXDWG Dyna Wide Glide	96 CI	HD-9608	KN-171B
		HD-9608	KN-171C
FXS Blackline	103 CI	HD-1611	KN-171B

*Indicates 2 filters required ♦ - Intake kit available - see page 80 Applications updated daily at knfilters.com

HARLEY DAVIDSON AIR & OIL FILTERS

2011 HARLEY DAVIDSON

Vehicle	Engine Type	Air Filter	Oil Filter
FXS Blackline	103 CI	HD-1611	KN-171C
VRSCDX Night Rod Special	76 CI	HD-1102	
VRSCF V-Rod Muscle	76 CI	HD-1102	
XL883L SuperLow	54 CI	HD-8834	KN-170
		HD-8834	KN-170C
XL883N Iron	54 CI	HD-8834	KN-170
		HD-8834	KN-170C
XL1200C Sportster Custom	74 CI	HD-8834	KN-170
		HD-8834	KN-170C
XL1200L Sportster Low	74 CI	HD-8834	KN-170
		HD-8834	KN-170C
XL1200N Sportster Nightster	74 CI	HD-8834	KN-170
		HD-8834	KN-170C
XL1200X Forty-Eight	74 CI	HD-8834	KN-170
		HD-8834	KN-170C
XR1200X Sportster	74 CI	HD-1208	KN-170
		HD-1208	KN-170C

2010 HARLEY DAVIDSON

Vehicle	Engine Type	Air Filter	Oil Filter
FLHP Road King Police	103 CI	HD-1508	
FLHR Road King	96 CI	HD-1508	KN-171B
		HD-1508	KN-171C
FLHRC Road King Classic	96 CI	HD-1508	KN-171B
		HD-1508	KN-171C
FLHT Electra Glide Standard	96 CI	HD-1508	
FLHTC Electra Glide Classic	96 CI	HD-1508	KN-171B
		HD-1508	KN-171C
FLHTCU Ultra Classic Electra Glide	96 CI	HD-1508	KN-171B
		HD-1508	KN-171C
FLHTCUSE5 CVO Ultra Classic Electra Glide	110 CI	HD-1508	KN-171B
		HD-1508	KN-171C
FLHTCUTG Tri-Glide Ultra Classic	96 CI	HD-1508	KN-171B
		HD-1508	KN-171C
FLHTK Electra Glide Ultra Limited	103 CI	HD-1508	KN-171B
		HD-1508	KN-171C
FLHTP Electra Glide Police	103 CI	HD-1508	
FLHX Street Glide	96 CI	HD-1508	KN-171B
		HD-1508	KN-171C
FLHXSE CVO Street Glide	110 CI	HD-0910	KN-171B
		HD-0910	KN-171C
FLHXXX Street Glide Trike	103 CI	HD-1508	KN-171B
		HD-1508	KN-171C

2010 HARLEY DAVIDSON

Vehicle	Engine Type	Air Filter	Oil Filter
FLSTC Heritage Softail Classic	96 CI	HD-1499	KN-171B
		HD-1499	KN-171C
FLSTF Fat Boy	96 CI	HD-1499	KN-171B
		HD-1499	KN-171C
FLSTFB Softail Fat Boy Lo	96 CI	HD-1499	KN-171B
		HD-1499	KN-171C
FLSTN Softail Deluxe	96 CI	HD-1499	KN-171B
		HD-1499	KN-171C
FLSTSB Softail Cross Bones	96 CI	HD-1611	KN-171B
		HD-1611	KN-171C
FLSTSE CVO Softail Convertible	110 CI	HD-0910	KN-171B
		HD-0910	KN-171C
FLTR Road Glide	96 CI	HD-1508	KN-171B
		HD-1508	KN-171C
FLTRX Road Glide Custom	96 CI	HD-1508	KN-171B
		HD-1508	KN-171C
FXCWC Rocker C	96 CI	HD-1499	KN-171B
		HD-1499	KN-171C
FXD Dyna Super Glide	96 CI	HD-9608	
FXDB Dyna Street Bob	96 CI	HD-9608	KN-171B
		HD-9608	KN-171C
FXDC Dyna Super Glide Custom	96 CI	HD-9608	KN-171B
		HD-9608	KN-171C
FXDF Fat Bob	96 CI	HD-9608	KN-171B
		HD-9608	KN-171C
FXDFSE2 CVO Dyno Fat Bob	96 CI		KN-171B
			KN-171C
FXDL Dyna Low Rider	96 CI - Japan	HD-9608	
FXDWG Dyna Wide Glide	96 CI	HD-9608	KN-171B
		HD-9608	KN-171C
FXSTC Softail Custom	96 CI	HD-1499	KN-171B
		HD-1499	KN-171C
VRSCAW V-Rod	69 CI	HD-1102	
VRSCDX Night Rod Special	76 CI	HD-1102	KN-174C
VRSCF V-Rod Muscle	76 CI	HD-1102	KN-174C
XL883C Sportster Custom	54 CI	HD-8834	KN-170
		HD-8834	KN-170C
XL883L Sportster Low	54 CI	HD-8834	KN-170
		HD-8834	KN-170C
XL883N Iron	54 CI	HD-8834	KN-170
		HD-8834	KN-170C

*Indicates 2 filters required ♦ - Intake kit available - see page 80 Applications updated daily at knfilters.com

Partial Listing - Complete List of Vehicles and Applications at knfilters.com

2010 HARLEY DAVIDSON

Vehicle	Engine Type	Air Filter	Oil Filter
XL1200C Sportster Custom	74 CI	HD-8834	KN-170
		HD-8834	KN-170C
XL1200L Sportster Low	74 CI	HD-8834	KN-170
		HD-8834	KN-170C
XL1200N Sportster Nightster	74 CI	HD-8834	KN-170
		HD-8834	KN-170C
XL1200X Forty-Eight	74 CI		KN-170
			KN-170C
XR1200X Sportster	74 CI	HD-1208	KN-170
		HD-1208	KN-170C

2009 HARLEY DAVIDSON

Vehicle	Engine Type	Air Filter	Oil Filter
FLHP Road King Police	103 CI	HD-1508	KN-171B
		HD-1508	KN-171C
FLHR Road King	96 CI	HD-1508	KN-171B
		HD-1508	KN-171C
FLHRC Road King Classic	96 CI	HD-1508	KN-171B
		HD-1508	KN-171C
FLHT Electra Glide Standard	96 CI	HD-1508	KN-171B
		HD-1508	KN-171C
FLHTC Electra Glide Classic	96 CI	HD-1508	KN-171B
		HD-1508	KN-171C
FLHTCI Electra Glide Classic F/I	88 CI		KN-171B
			KN-171C
FLHTCU Ultra Classic Electra Glide	96 CI	HD-1508	KN-171B
		HD-1508	KN-171C
FLHTCUSE4 CVO Ultra Classic Electra Glide	110 CI	HD-1508	KN-171B
		HD-1508	KN-171C
FLHTCUTG Tri-Glide Ultra Classic	96 CI	HD-1508	KN-171B
		HD-1508	KN-171C
FLHTI Electra Glide Standard F/I	88 CI		KN-171B
			KN-171C
FLHTP Electra Glide Police	103 CI	HD-1508	KN-171B
		HD-1508	KN-171C
FLHX Street Glide	96 CI	HD-1508	KN-171B
		HD-1508	KN-171C
FLSTC Heritage Softail Classic	96 CI	HD-1499	KN-171B
		HD-1499	KN-171C
FLSTF Fat Boy	96 CI	HD-1499	KN-171B
		HD-1499	KN-171C
FLSTN Softail Deluxe	96 CI	HD-1499	KN-171B
FLSTN Softail Deluxe	96 CI	HD-1499	KN-171C
FLSTSB Softail Cross Bones	96 CI		KN-171B
			KN-171C
FLSTSB Softail Cross Bones	96 CI - Non-US	HD-1499	KN-171B
FLSTSB Softail Cross Bones	96 CI - US	HD-1611	KN-171B
FLTR Road Glide	96 CI	HD-1508	KN-171B
		HD-1508	KN-171C
FLTRSE3 CVO Road Glide	110 CI	HD-0910	KN-171B
		HD-0910	KN-171C
FXCW Rocker	96 CI	HD-1499	KN-171B
		HD-1499	KN-171C
FXCWC Rocker C	96 CI	HD-1499	KN-171B
		HD-1499	KN-171C
FXD Dyna Super Glide	96 CI	HD-9608	KN-171B
		HD-9608	KN-171C
FXDB Dyna Street Bob	96 CI	HD-9608	KN-171B
		HD-9608	KN-171C
FXDC Dyna Super Glide Custom	96 CI	HD-9608	KN-171B
		HD-9608	KN-171C
FXDF Fat Bob	96 CI	HD-9608	KN-171B
		HD-9608	KN-171C
FXDFSE CVO Fat Bob	110 CI		KN-171B
			KN-171C
FXDL Dyna Low Rider	96 CI	HD-9608	KN-171B
		HD-9608	KN-171C
FXSTB Night Train	96 CI	HD-1499	KN-171B
		HD-1499	KN-171C
FXSTC Softail Custom	96 CI	HD-1499	KN-171B
		HD-1499	KN-171C
FXSTSSE3 CVO Softail Springer	110 CI		KN-171B
			KN-171C
VRSCAW V-Rod	69 CI	HD-1102	KN-174C
VRSCDX Night Rod Special	76 CI	HD-1102	KN-174C
VRSCF V-Rod Muscle	76 CI	HD-1102	KN-174C
XL883C Sportster Custom	54 CI	HD-8834	KN-170
		HD-8834	KN-170C
XL883L Sportster Low	54 CI	HD-8834	KN-170
		HD-8834	KN-170C
XL883N Iron	54 CI		KN-170
			KN-170C
XL1200C Sportster Custom	74 CI	HD-8834	KN-170
		HD-8834	KN-170C

HARLEY DAVIDSON AIR & OIL FILTERS

Vehicle	Engine Type	Air Filter	Oil Filter
2009 HARLEY DAVIDSON			
XL1200L Sportster Low	74 CI	HD-8834	KN-170
		HD-8834	KN-170C
XL1200N Sportster Nightster	74 CI	HD-8834	KN-170
		HD-8834	KN-170C
XR1200	74 CI	HD-1208	KN-170
		HD-1208	KN-170C
2008 HARLEY DAVIDSON			
FLHR Road King	96 CI	HD-1508	KN-171B
		HD-1508	KN-171C
FLHRC Road King Classic	96 CI	HD-1508	KN-171B
		HD-1508	KN-171C
FLHRSE4 Screamin Eagle Road King	110 CI	HD-1508	KN-171B
		HD-1508	KN-171C
FLHT Electra Glide Standard	96 CI	HD-1508	KN-171B
		HD-1508	KN-171C
FLHTC Electra Glide Classic	96 CI	HD-1508	KN-171B
		HD-1508	KN-171C
FLHTCI Electra Glide Classic F/I	88 CI		KN-171B
			KN-171C
FLHTCU Ultra Classic Electra Glide	96 CI	HD-1508	KN-171B
		HD-1508	KN-171C
FLHTCUSE3 Screamin Eagle Ultra Classic Electra Gl	110 CI	HD-1508	KN-171B
		HD-1508	KN-171C
FLHTI Electra Glide Standard F/I	88 CI		KN-171B
			KN-171C
FLHX Street Glide	96 CI	HD-1508	KN-171B
		HD-1508	KN-171C
FLSTC Heritage Softail Classic	96 CI	HD-1499	KN-171B
		HD-1499	KN-171C
FLSTF Fat Boy	96 CI	HD-1499	KN-171B
		HD-1499	KN-171C
FLSTN Softail Deluxe	96 CI	HD-1499	KN-171B
		HD-1499	KN-171C
FLSTSB Softail Cross Bones	96 CI		KN-171B
			KN-171C
FLSTSB Softail Cross Bones	96 CI - Non-US	HD-1499	KN-171B
FLSTSB Softail Cross Bones	96 CI - US	HD-1611	KN-171B
FLTR Road Glide	96 CI	HD-1508	KN-171B
		HD-1508	KN-171C
FXCW Rocker	96 CI	HD-1499	KN-171B
		HD-1499	KN-171C
2008 HARLEY DAVIDSON			
FXCWC Rocker C	96 CI	HD-1499	KN-171B
		HD-1499	KN-171C
FXD Dyna Super Glide	96 CI	HD-9608	KN-171B
		HD-9608	KN-171C
FXDB Dyna Street Bob	96 CI	HD-9608	KN-171B
		HD-9608	KN-171C
FXDC Dyna Super Glide Custom	96 CI	HD-9608	KN-171B
		HD-9608	KN-171C
FXDF Fat Bob	96 CI	HD-9608	KN-171B
		HD-9608	KN-171C
FXDL Dyna Low Rider	96 CI	HD-9608	KN-171B
		HD-9608	KN-171C
FXDSE2 Screamin Eagle Dyna	110 CI		KN-171B
			KN-171C
FXDSE2 Screamin Eagle Dyna	110 CI - US	HD-0800	KN-171B
FXDWG Dyna Wide Glide	96 CI	HD-9608	KN-171B
		HD-9608	KN-171C
FXSTB Night Train	96 CI	HD-1499	KN-171B
		HD-1499	KN-171C
FXSTC Softail Custom	96 CI	HD-1499	KN-171B
		HD-1499	KN-171C
FXSTSSE2 Screamin Eagle Softail Springer	110 CI		KN-171B
			KN-171C
VRSCAW V-Rod	69 CI	HD-1102	KN-174C
VRSCD Night Rod	76 CI	HD-1102	KN-174C
VRSCDX Night Rod Special	76 CI	HD-1102	KN-174C
XL883 Sportster	54 CI	HD-8834	KN-170
		HD-8834	KN-170C
XL883C Sportster Custom	54 CI	HD-8834	KN-170
		HD-8834	KN-170C
XL883L Sportster Low	54 CI	HD-8834	KN-170
		HD-8834	KN-170C
XL1200C Sportster Custom	74 CI	HD-8834	KN-170
		HD-8834	KN-170C
XL1200L Sportster Low	74 CI	HD-8834	KN-170
		HD-8834	KN-170C
XL1200N Sportster Nightster	74 CI	HD-8834	KN-170
		HD-8834	KN-170C
XL1200R Sportster Roadster	74 CI	HD-8834	KN-170
		HD-8834	KN-170C
XR1200	74 CI	HD-1208	KN-170

*Indicates 2 filters required ♦ - Intake kit available - see page 80 Applications updated daily at knfilters.com

Partial Listing - Complete List of Vehicles and Applications at knfilters.com

Vehicle	Engine Type	Air Filter	Oil Filter
2008 HARLEY DAVIDSON			
XR1200	74 CI	HD-1208	KN-170C
2007 HARLEY DAVIDSON			
FLHR Road King	96 CI	HD-1499	KN-171B
		HD-1499	KN-171C
FLHRC Road King Classic	96 CI	HD-1499	KN-171B
		HD-1499	KN-171C
FLHRS Road King Custom	96 CI	HD-1499	KN-171B
		HD-1499	KN-171C
FLHRSE3 Screamin Eagle Road King	110 CI		KN-171B
			KN-171C
FLHRSE3 Screamin Eagle Road King	110 CI - Replaces air filter part# 2944299A/B/C/D	HD-0800	KN-171B
FLHT Electra Glide Standard	96 CI	HD-1499	KN-171B
		HD-1499	KN-171C
FLHTC Electra Glide Classic	96 CI	HD-1499	KN-171B
		HD-1499	KN-171C
FLHTCI Electra Glide Classic F/I	88 CI		KN-171B
			KN-171C
FLHTCU Ultra Classic Electra Glide	96 CI	HD-1499	KN-171B
		HD-1499	KN-171C
FLHTCUSE2 Screamin Eagle Ultra Classic Electra Gli	110 CI		KN-171B
			KN-171C
FLHTCUSE2 Screamin Eagle Ultra Classic Electra Gli	110 CI - Replaces air filter part# 2944299A/B/C/D	HD-0800	KN-171B
FLHTI Electra Glide Standard F/I	88 CI		KN-171B
			KN-171C
FLHX Street Glide	96 CI	HD-1499	KN-171B
		HD-1499	KN-171C
FLSTC Heritage Softail Classic	96 CI	HD-1499	KN-171B
		HD-1499	KN-171C
FLSTF Fat Boy	96 CI	HD-1499	KN-171B
		HD-1499	KN-171C
FLSTN Softail Deluxe	96 CI	HD-1499	KN-171B
		HD-1499	KN-171C
FLSTSC Softail Springer	96 CI	HD-1499	KN-171B
		HD-1499	KN-171C
FLTR Road Glide	96 CI	HD-1499	KN-171B
		HD-1499	KN-171C
FXD Dyna Super Glide	96 CI	HD-1499	KN-171B
		HD-1499	KN-171C
FXDB Dyna Street Bob	96 CI	HD-1499	KN-171B

Vehicle	Engine Type	Air Filter	Oil Filter
2007 HARLEY DAVIDSON			
FXDB Dyna Street Bob	96 CI	HD-1499	KN-171C
FXDC Dyna Super Glide Custom	96 CI	HD-1499	KN-171B
		HD-1499	KN-171C
FXDL Dyna Low Rider	96 CI	HD-1499	KN-171B
		HD-1499	KN-171C
FXDSE Screamin Eagle Dyna	110 CI		KN-171B
			KN-171C
FXDSE Screamin Eagle Dyna	110 CI - Replaces air filter part# 2944299A/B/C/D	HD-0800	KN-171B
FXDWG Dyna Wide Glide	96 CI	HD-1499	KN-171B
		HD-1499	KN-171C
FXST Softail Standard	96 CI	HD-1499	KN-171B
		HD-1499	KN-171C
FXSTB Night Train	96 CI	HD-1499	KN-171B
		HD-1499	KN-171C
FXSTC Softail Custom	96 CI	HD-1499	KN-171B
		HD-1499	KN-171C
FXSTD Softail Deuce	96 CI	HD-1499	KN-171B
		HD-1499	KN-171C
FXSTSSE Screamin Eagle Softail Springer	110 CI		KN-171B
			KN-171C
FXSTSSE Screamin Eagle Softail Springer	110 CI - Replaces air filter part# 2944299A/B/C/D	HD-0800	KN-171B
VRSCAW V-Rod	69 CI	HD-1102	KN-174C
VRSCD Night Rod	69 CI	HD-1102	KN-174C
VRSCDX Night Rod Special	69 CI	HD-1102	KN-174C
VRSCR Street Rod	69 CI	HD-1102	KN-174C
VRSCX V-Rod	76 CI	HD-1102	KN-174C
XL50 50th Anniversary Sportster	74 CI	HD-8834	KN-170
		HD-8834	KN-170C
XL883 Sportster	54 CI	HD-8834	KN-170
		HD-8834	KN-170C
XL883C Sportster Custom	54 CI	HD-8834	KN-170
		HD-8834	KN-170C
XL883L Sportster Low	54 CI	HD-8834	KN-170
		HD-8834	KN-170C
XL883R Sportster	54 CI	HD-8834	KN-170
		HD-8834	KN-170C
XL1200C Sportster Custom	74 CI	HD-8834	KN-170
		HD-8834	KN-170C
XL1200L Sportster Low	74 CI	HD-8834	KN-170
		HD-8834	KN-170C

2007 HARLEY DAVIDSON

Vehicle	Engine Type	Air Filter	Oil Filter
XL1200N Sportster Nightster	74 CI	HD-8834	KN-170
		HD-8834	KN-170C
XL1200R Sportster Roadster	74 CI	HD-8834	KN-170
		HD-8834	KN-170C

2006 HARLEY DAVIDSON

Vehicle	Engine Type	Air Filter	Oil Filter
FLHR Road King	88 CI	HD-1499	KN-171B
		HD-1499	KN-171C
FLHRCI Road King Classic F/I	88 CI	HD-1499	KN-171B
		HD-1499	KN-171C
FLHRI Road King F/I	88 CI	HD-1499	KN-171B
		HD-1499	KN-171C
FLHRS Road King Custom	88 CI	HD-1499	KN-171B
		HD-1499	KN-171C
FLHRSI Road King Custom F/I	88 CI	HD-1499	KN-171B
		HD-1499	KN-171C
FLHT Electra Glide Standard	88 CI	HD-1499	KN-171B
		HD-1499	KN-171C
FLHTCI Electra Glide Classic F/I	88 CI	HD-1499	KN-171B
		HD-1499	KN-171C
FLHTCUI Electra Glide Ultra Classic F/I	88 CI	HD-1499	KN-171B
		HD-1499	KN-171C
FLHTI Electra Glide Standard F/I	88 CI	HD-1499	KN-171B
		HD-1499	KN-171C
FLHX Street Glide	88 CI	HD-1499	KN-171B
		HD-1499	KN-171C
FLHXI Street Glide F/I	88 CI	HD-1499	KN-171B
		HD-1499	KN-171C
FLST Heritage Softail	88 CI	HD-1499	KN-171B
		HD-1499	KN-171C
FLSTCI Heritage Softail Classic F/I	88 CI	HD-1499	KN-171B
		HD-1499	KN-171C
FLSTF Fat Boy	88 CI	HD-1499	KN-171B
		HD-1499	KN-171C
FLSTF Fat Boy	96 CI		KN-171B
			KN-171C
FLSTFI Fat Boy F/I	88 CI	HD-1499	KN-171B
		HD-1499	KN-171C
FLSTI Heritage Softail F/I	88 CI	HD-1499	KN-171B
		HD-1499	KN-171C
FLSTN Softail Deluxe	88 CI	HD-1499	KN-171B
		HD-1499	KN-171C
FLSTNI Softail Deluxe F/I	88 CI	HD-1499	KN-171B
		HD-1499	KN-171C
FLSTSC Softail Springer Classic	88 CI	HD-1499	KN-171B

2006 HARLEY DAVIDSON

Vehicle	Engine Type	Air Filter	Oil Filter
FLSTSC Softail Springer Classic	88 CI	HD-1499	KN-171C
FLSTSCI Softail Springer Classic F/I	88 CI	HD-1499	KN-171B
		HD-1499	KN-171C
FLTR Road Glide	88 CI		KN-171B
			KN-171C
FLTRI Road Glide F/I	88 CI	HD-1499	KN-171B
		HD-1499	KN-171C
FXDBI Street Bob F/I	88 CI	HD-1499	KN-171B
		HD-1499	KN-171C
FXDCI Dyna Super Glide Custom F/I	88 CI	HD-1499	KN-171B
		HD-1499	KN-171C
FXDI Dyna Super Glide F/I	88 CI	HD-1499	KN-171B
		HD-1499	KN-171C
FXDI35 35th Anniv. Super Glide F/I	88 CI	HD-1499	KN-171B
		HD-1499	KN-171C
FXDL Dyna Low Rider	88 CI	HD-1499	KN-171B
		HD-1499	KN-171C
FXDLI Dyna Low Rider F/I	88 CI	HD-1499	KN-171B
		HD-1499	KN-171C
FXDWG Dyna Wide Glide	88 CI	HD-1499	KN-171B
		HD-1499	KN-171C
FXDWGI Dyna Wide Glide F/I	88 CI	HD-1499	KN-171B
		HD-1499	KN-171C
FXST Softail Standard	88 CI	HD-1499	KN-171B
		HD-1499	KN-171C
FXSTB Night Train	88 CI	HD-1499	KN-171B
		HD-1499	KN-171C
FXSTBI Night Train F/I	88 CI	HD-1499	KN-171B
		HD-1499	KN-171C
FXSTD Softail Deuce	88 CI	HD-1499	KN-171B
		HD-1499	KN-171C
FXSTDI Softail Deuce F/I	88 CI	HD-1499	KN-171B
		HD-1499	KN-171C
FXSTI Softail Standard F/I	88 CI	HD-1499	KN-171B
		HD-1499	KN-171C
FXSTS Springer Softail	88 CI	HD-1499	KN-171B
		HD-1499	KN-171C
FXSTSI Springer Softail F/I	88 CI	HD-1499	KN-171B
		HD-1499	KN-171C
VRSCA V-Rod	69 CI	HD-1102	KN-174C
VRSCD Night Rod	69 CI	HD-1102	KN-174C

*Indicates 2 filters required ♦ - Intake kit available - see page 80 Applications updated daily at knfilters.com

Partial Listing - Complete List of Vehicles and Applications at knfilters.com

2006 HARLEY DAVIDSON

Vehicle	Engine Type	Air Filter	Oil Filter
VRSCR Street Rod	69 CI	HD-1102	KN-174C
VRSCSE2 Screamin Eagle V-Rod	76 CI	HD-1102	KN-174C
XL883 Sportster	54 CI	HD-8834	KN-170
		HD-8834	KN-170C
XL883C Sportster Custom	54 CI	HD-8834	KN-170
		HD-8834	KN-170C
XL883L Sportster Low	54 CI	HD-8834	KN-170
		HD-8834	KN-170C
XL883R Sportster	54 CI	HD-8834	KN-170
		HD-8834	KN-170C
XL1200C Sportster Custom	74 CI	HD-8834	KN-170
		HD-8834	KN-170C
XL1200L Sportster Low	74 CI	HD-8834	KN-170
		HD-8834	KN-170C
XL1200R Sportster Roadster	74 CI	HD-8834	KN-170
		HD-8834	KN-170C
XLH883 Sportster	54 CI		KN-170
			KN-170C
XLH883 Sportster Custom	54 CI		KN-170
			KN-170C
XLH883L Sportster Low	54 CI		KN-170
			KN-170C
XLH883R Sportster R	54 CI		KN-170
			KN-170C

2005 HARLEY DAVIDSON

Vehicle	Engine Type	Air Filter	Oil Filter
FLHR Road King	88 CI	HD-1499	KN-171B
		HD-1499	KN-171C
FLHRCI Road King Classic F/I	88 CI	HD-1499	KN-171B
		HD-1499	KN-171C
FLHRI Road King F/I	88 CI	HD-1499	KN-171B
		HD-1499	KN-171C
FLHRS Road King Custom	88 CI	HD-1499	KN-171B
		HD-1499	KN-171C
FLHRSI Road King Custom F/I	88 CI	HD-1499	KN-171B
		HD-1499	KN-171C
FLHT Electra Glide Standard	88 CI	HD-1499	KN-171B
		HD-1499	KN-171C
FLHTC Electra Glide Classic	88 CI	HD-1499	KN-171B
		HD-1499	KN-171C
FLHTCI Electra Glide Classic F/I	88 CI	HD-1499	KN-171B
		HD-1499	KN-171C
FLHTCSE2 Screamin Eagle Electra Glide 2	103 CI		KN-171B

2005 HARLEY DAVIDSON

Vehicle	Engine Type	Air Filter	Oil Filter
FLHTCSE2 Screamin Eagle Electra Glide 2	103 CI		KN-171C
FLHTCSE2 Screamin Eagle Electra Glide 2	103 CI - Replaces air filter part# 2944299A/B/C/D	HD-0800	KN-171B
FLHTCSE2 Screamin Eagle Electra Glide 2	103 CI - Replaces air filter part# 2946199	HD-1499	KN-171B
FLHTCUI Electra Glide Ultra Classic F/I	88 CI	HD-1499	KN-171B
		HD-1499	KN-171C
FLHTI Electra Glide Standard F/I	88 CI	HD-1499	KN-171B
		HD-1499	KN-171C
FLSTCI Heritage Softail Classic F/I	88 CI	HD-1499	KN-171B
		HD-1499	KN-171C
FLSTF Fat Boy	88 CI	HD-1499	KN-171B
		HD-1499	KN-171C
FLSTF Fat Boy	96 CI		KN-171B
			KN-171C
FLSTFI Fat Boy F/I	88 CI	HD-1499	KN-171B
		HD-1499	KN-171C
FLSTFI Fat Boy F/I 15th Anniv.	95 CI	HD-0800	KN-171B
		HD-0800	KN-171C
FLSTFSE Screamin Eagle Fat Boy	103 CI	HD-0800	KN-171B
		HD-0800	KN-171C
FLSTN Softail Deluxe	88 CI	HD-1499	KN-171B
		HD-1499	KN-171C
FLSTNI Softail Deluxe F/I	88 CI	HD-1499	KN-171B
		HD-1499	KN-171C
FLSTSC Softail Springer Classic	88 CI	HD-1499	KN-171B
		HD-1499	KN-171C
FLSTSCI Softail Springer Classic F/I	88 CI	HD-1499	KN-171B
		HD-1499	KN-171C
FLTR Road Glide	88 CI		KN-171B
			KN-171C
FLTRI Road Glide F/I	88 CI	HD-1499	KN-171B
		HD-1499	KN-171C
FXDCI Dyna Super Glide Custom F/I	88 CI	HD-1499	KN-171B
		HD-1499	KN-171C
FXDI Dyna Super Glide F/I	88 CI	HD-1499	KN-171B
		HD-1499	KN-171C
FXDL Dyna Low Rider	88 CI	HD-1499	KN-171B
		HD-1499	KN-171C
FXDLI Dyna Low Rider F/I	88 CI	HD-1499	KN-171B
		HD-1499	KN-171C
FXDWG Dyna Wide Glide	88 CI	HD-1499	KN-171B
		HD-1499	KN-171C

*Indicates 2 filters required ♦ - Intake kit available - see page 80 Applications updated daily at knfilters.com

HARLEY DAVIDSON AIR & OIL FILTERS

2005 HARLEY DAVIDSON

Vehicle	Engine Type	Air Filter	Oil Filter
FXDWGI Dyna Wide Glide F/I	88 CI	HD-1499	KN-171B
		HD-1499	KN-171C
FXDXI Dyna Super Glide Sport F/I	88 CI	HD-1499	KN-171B
		HD-1499	KN-171C
FXST Softail Standard	88 CI	HD-1499	KN-171B
		HD-1499	KN-171C
FXSTB Night Train	88 CI	HD-1499	KN-171B
		HD-1499	KN-171C
FXSTBI Night Train F/I	88 CI	HD-1499	KN-171B
		HD-1499	KN-171C
FXSTD Softail Deuce	88 CI	HD-1499	KN-171B
		HD-1499	KN-171C
FXSTDI Softail Deuce F/I	88 CI	HD-1499	KN-171B
		HD-1499	KN-171C
FXSTI Softail Standard F/I	88 CI	HD-1499	KN-171B
		HD-1499	KN-171C
FXSTS Springer Softail	88 CI	HD-1499	KN-171B
		HD-1499	KN-171C
FXSTSI Springer Softail F/I	88 CI	HD-1499	KN-171B
		HD-1499	KN-171C
VRSCA V-Rod	69 CI	HD-1102	KN-174C
VRSCB V-Rod	69 CI	HD-1102	KN-174C
VRSCSE Screamin Eagle V-Rod	76 CI	HD-1102	KN-174C
XL883 Sportster	54 CI	HD-8834	KN-170
		HD-8834	KN-170C
XL883C Sportster Custom	54 CI	HD-8834	KN-170
		HD-8834	KN-170C
XL883L Sportster Low	54 CI	HD-8834	KN-170
		HD-8834	KN-170C
XL883R Sportster	54 CI	HD-8834	KN-170
		HD-8834	KN-170C
XL1200C Sportster Custom	74 CI	HD-8834	KN-170
		HD-8834	KN-170C
XL1200R Sportster Roadster	74 CI	HD-8834	KN-170
		HD-8834	KN-170C
XLH883 Sportster	54 CI		KN-170
			KN-170C
XLH883 Sportster Custom	54 CI		KN-170
			KN-170C
XLH883L Sportster Low	54 CI		KN-170
			KN-170C

2004 HARLEY DAVIDSON

Vehicle	Engine Type	Air Filter	Oil Filter
FLHR Road King	88 CI	HD-1499	KN-171B
		HD-1499	KN-171C
FLHRCI Road King Classic F/I	88 CI	HD-1499	KN-171B
		HD-1499	KN-171C
FLHRI Road King F/I	88 CI	HD-1499	KN-171B
		HD-1499	KN-171C
FLHRS Road King Custom	88 CI	HD-1499	KN-171B
		HD-1499	KN-171C
FLHRSI Road King Custom F/I	88 CI	HD-1499	KN-171B
		HD-1499	KN-171C
FLHT Electra Glide Standard	88 CI	HD-1499	KN-171B
		HD-1499	KN-171C
FLHTC Electra Glide Classic	88 CI	HD-1499	KN-171B
		HD-1499	KN-171C
FLHTCI Electra Glide Classic F/I	88 CI	HD-1499	KN-171B
		HD-1499	KN-171C
FLHTCSE Screamin Eagle Electra Glide	103 CI		KN-171B
			KN-171C
FLHTCUI Electra Glide Ultra Classic F/I	88 CI	HD-1499	KN-171B
		HD-1499	KN-171C
FLHTI Electra Glide Standard F/I	88 CI	HD-1499	KN-171B
		HD-1499	KN-171C
FLSTC Heritage Softail Classic	88 CI	HD-1499	KN-171B
		HD-1499	KN-171C
FLSTCI Heritage Softail Classic F/I	88 CI	HD-1499	KN-171B
		HD-1499	KN-171C
FLSTF Fat Boy	88 CI	HD-1499	KN-171B
		HD-1499	KN-171C
FLSTF Fat Boy	96 CI		KN-171B
			KN-171C
FLSTFI Fat Boy F/I	88 CI	HD-1499	KN-171B
		HD-1499	KN-171C
FLTR Road Glide	88 CI		KN-171B
			KN-171C
FLTRI Road Glide F/I	88 CI	HD-1499	KN-171B
		HD-1499	KN-171C
FXDI Dyna Super Glide F/I	88 CI	HD-1499	KN-171B
		HD-1499	KN-171C
FXDL Dyna Low Rider	88 CI	HD-1499	KN-171B
		HD-1499	KN-171C
FXDLI Dyna Low Rider F/I	88 CI	HD-1499	KN-171B
		HD-1499	KN-171C

2004 HARLEY DAVIDSON

Vehicle	Engine Type	Air Filter	Oil Filter
FXDWG Dyna Wide Glide	88 CI	HD-1499	KN-171B
		HD-1499	KN-171C
FXDWGI Dyna Wide Glide F/I	88 CI	HD-1499	KN-171B
		HD-1499	KN-171C
FXDX Dyna Super Glide Sport	88 CI	HD-1499	KN-171B
		HD-1499	KN-171C
FXDXI Dyna Super Glide Sport F/I	88 CI	HD-1499	KN-171B
		HD-1499	KN-171C
FXST Softail Standard	88 CI	HD-1499	KN-171B
		HD-1499	KN-171C
FXSTB Night Train	88 CI	HD-1499	KN-171B
		HD-1499	KN-171C
FXSTBI Night Train F/I	88 CI	HD-1499	KN-171B
		HD-1499	KN-171C
FXSTD Softail Deuce	88 CI	HD-1499	KN-171B
		HD-1499	KN-171C
FXSTDI Softail Deuce F/I	88 CI	HD-1499	KN-171B
		HD-1499	KN-171C
FXSTDSE2 Screamin Eagle Softail Duce 2	95 CI		KN-171B
			KN-171C
FXSTI Softail Standard F/I	88 CI	HD-1499	KN-171B
		HD-1499	KN-171C
FXSTS Springer Softail	88 CI	HD-1499	KN-171B
		HD-1499	KN-171C
FXSTSI Springer Softail F/I	88 CI	HD-1499	KN-171B
		HD-1499	KN-171C
VRSCA V-Rod	69 CI	HD-1102	KN-174C
VRSCB V-Rod	69 CI	HD-1102	KN-174C
XL883 Sportster	54 CI	HD-8834	KN-170
		HD-8834	KN-170C
XL883C Sportster Custom	54 CI	HD-8834	KN-170
		HD-8834	KN-170C
XL883L Sportster Low	54 CI		KN-170
			KN-170C
XL883R Sportster	54 CI		KN-170
			KN-170C
XL1200C Sportster Custom	74 CI	HD-8834	KN-170
		HD-8834	KN-170C
XL1200R Sportster Roadster	74 CI	HD-8834	KN-170
		HD-8834	KN-170C
XLH883 Sportster	54 CI		KN-170

2004 HARLEY DAVIDSON

Vehicle	Engine Type	Air Filter	Oil Filter
XLH883 Sportster	54 CI		KN-170C
XLH883 Sportster Custom	54 CI		KN-170
			KN-170C

2003 HARLEY DAVIDSON

Vehicle	Engine Type	Air Filter	Oil Filter
FLHR Road King	88 CI	HD-1499	KN-171B
		HD-1499	KN-171C
FLHRCI Road King Classic F/I	88 CI	HD-1499	KN-171B
		HD-1499	KN-171C
FLHRI Road King F/I	88 CI	HD-1499	KN-171B
		HD-1499	KN-171C
FLHT Electra Glide Standard	88 CI	HD-1499	KN-171B
		HD-1499	KN-171C
FLHTC Electra Glide Classic	88 CI	HD-1499	KN-171B
		HD-1499	KN-171C
FLHTCI Electra Glide Classic F/I	88 CI	HD-1499	KN-171B
		HD-1499	KN-171C
FLHTCSE Screamin Eagle Electra Glide	103 CI		KN-171B
			KN-171C
FLHTCUI Electra Glide Ultra Classic F/I	88 CI	HD-1499	KN-171B
		HD-1499	KN-171C
FLHTI Electra Glide Standard F/I	88 CI	HD-1499	KN-171B
		HD-1499	KN-171C
FLHTSEI Screamin Eagle Road King F/I	103 CI		KN-171B
			KN-171C
FLSTC Heritage Softail Classic	88 CI	HD-1499	KN-171B
		HD-1499	KN-171C
FLSTCI Heritage Softail Classic F/I	88 CI	HD-1499	KN-171B
		HD-1499	KN-171C
FLSTF Fat Boy	88 CI	HD-1499	KN-171B
		HD-1499	KN-171C
FLSTF Fat Boy	96 CI		KN-171B
			KN-171C
FLSTFI Fat Boy F/I	88 CI	HD-1499	KN-171B
		HD-1499	KN-171C
FLSTS Heritage Springer	88 CI	HD-1499	KN-171B
		HD-1499	KN-171C
FLSTSI Heritage Springer F/I	88 CI	HD-1499	KN-171B
		HD-1499	KN-171C
FLTR Road Glide	88 CI		KN-171B
			KN-171C
FLTRI Road Glide F/I	88 CI	HD-1499	KN-171B
		HD-1499	KN-171C

*Indicates 2 filters required ♦ - Intake kit available - see page 80 Applications updated daily at knfilters.com

Vehicle	Engine Type	Air Filter	Oil Filter
2003 HARLEY DAVIDSON			
FXD Dyna Super Glide	88 CI	HD-1499	KN-171B
		HD-1499	KN-171C
FXDL Dyna Low Rider	88 CI	HD-1499	KN-171B
		HD-1499	KN-171C
FXDWG Dyna Wide Glide	88 CI	HD-1499	KN-171B
		HD-1499	KN-171C
FXDX Dyna Super Glide Sport	88 CI	HD-1499	KN-171B
		HD-1499	KN-171C
FXDXT Dyna Super Glide T-Sport	88 CI	HD-1499	KN-171B
		HD-1499	KN-171C
FXST Softail Standard	88 CI	HD-1499	KN-171B
		HD-1499	KN-171C
FXSTB Night Train	88 CI	HD-1499	KN-171B
		HD-1499	KN-171C
FXSTBI Night Train F/I	88 CI	HD-1499	KN-171B
		HD-1499	KN-171C
FXSTD Softail Deuce	88 CI	HD-1499	KN-171B
		HD-1499	KN-171C
FXSTDI Softail Deuce F/I	88 CI	HD-1499	KN-171B
		HD-1499	KN-171C
FXSTDSE Screamin Eagle Softail Deuce	95 CI		KN-171B
			KN-171C
FXSTI Softail Standard F/I	88 CI	HD-1499	KN-171B
		HD-1499	KN-171C
FXSTS Springer Softail	88 CI	HD-1499	KN-171B
		HD-1499	KN-171C
FXSTSI Springer Softail F/I	88 CI	HD-1499	KN-171B
		HD-1499	KN-171C
VRSCA V-Rod	69 CI	HD-1102	KN-174C
XL53C Sportster Custom	54 CI		KN-170
			KN-170C
XL883C Sportster Custom	54 CI	HD-1388	KN-170
		HD-1388	KN-170C
XL883R Sportster	54 CI	HD-1388	KN-170
		HD-1388	KN-170C
XL1200C Sportster Custom	74 CI	HD-1388	KN-170
		HD-1388	KN-170C
XL1200S Sportster Sport	74 CI	HD-1388	KN-170
		HD-1388	KN-170C

Vehicle	Engine Type	Air Filter	Oil Filter
2003 HARLEY DAVIDSON			
XLH883 Sportster	54 CI	HD-1388	KN-170
		HD-1388	KN-170C
XLH883 Sportster Custom	54 CI		KN-170
			KN-170C
XLH883 Sportster Hugger	54 CI	HD-1388	KN-170
		HD-1388	KN-170C
2002 HARLEY DAVIDSON			
FLHR Road King	88 CI	HD-1499	KN-171B
		HD-1499	KN-171C
FLHRCI Road King Classic F/I	88 CI	HD-1499	KN-171B
		HD-1499	KN-171C
FLHRI Road King F/I	88 CI		KN-171B
			KN-171C
FLHT Electra Glide Standard	88 CI	HD-1499	KN-171B
		HD-1499	KN-171C
FLHTC Electra Glide Classic	88 CI	HD-1499	KN-171B
		HD-1499	KN-171C
FLHTCI Electra Glide Classic F/I	88 CI	HD-1499	KN-171B
		HD-1499	KN-171C
FLHTCUI Electra Glide Ultra Classic F/I	88 CI	HD-1499	KN-171B
		HD-1499	KN-171C
FLSTC Heritage Softail Classic	88 CI	HD-1499	KN-171B
		HD-1499	KN-171C
FLSTCI Heritage Softail Classic F/I	88 CI	HD-1499	KN-171B
		HD-1499	KN-171C
FLSTF Fat Boy	88 CI	HD-1499	KN-171B
		HD-1499	KN-171C
FLSTFI Fat Boy F/I	88 CI	HD-1499	KN-171B
		HD-1499	KN-171C
FLSTS Heritage Springer	88 CI	HD-1499	KN-171B
		HD-1499	KN-171C
FLSTSI Heritage Springer F/I	88 CI	HD-1499	KN-171B
		HD-1499	KN-171C
FLTR Road Glide	88 CI	HD-1499	KN-171B
		HD-1499	KN-171C
FLTRI Road Glide F/I	88 CI	HD-1499	KN-171B
		HD-1499	KN-171C
FXD Dyna Super Glide	88 CI	HD-1499	KN-171B
		HD-1499	KN-171C
FXDL Dyna Low Rider	88 CI	HD-1499	KN-171B
		HD-1499	KN-171C
FXDWG Dyna Wide Glide	88 CI	HD-1499	KN-171B

2002 HARLEY DAVIDSON

Vehicle	Engine Type	Air Filter	Oil Filter
FXDWG Dyna Wide Glide	88 CI	HD-1499	KN-171C
FXDX Dyna Super Glide Sport	88 CI	HD-1499	KN-171B
		HD-1499	KN-171C
FXDXT Dyna Super Glide T-Sport	88 CI	HD-1499	KN-171B
		HD-1499	KN-171C
FXST Softail Standard	88 CI	HD-1499	KN-171B
		HD-1499	KN-171C
FXSTB Night Train	88 CI	HD-1499	KN-171B
		HD-1499	KN-171C
FXSTBI Night Train F/I	88 CI	HD-1499	KN-171B
		HD-1499	KN-171C
FXSTD Softail Deuce	88 CI	HD-1499	KN-171B
		HD-1499	KN-171C
FXSTDI Softail Deuce F/I	88 CI	HD-1499	KN-171B
		HD-1499	KN-171C
FXSTI Softail Standard F/I	88 CI	HD-1499	KN-171B
		HD-1499	KN-171C
FXSTS Springer Softail	88 CI	HD-1499	KN-171B
		HD-1499	KN-171C
FXSTSI Springer Softail F/I	88 CI	HD-1499	KN-171B
		HD-1499	KN-171C
VRSCA V-Rod	69 CI	HD-1102	KN-174C
XL53C Sportster Custom	54 CI		KN-170
			KN-170C
XL883R Sportster	54 CI	HD-1388	KN-170
		HD-1388	KN-170C
XL1200C Sportster Custom	74 CI	HD-1388	KN-170
		HD-1388	KN-170C
XL1200S Sportster Sport	74 CI	HD-1388	KN-170
		HD-1388	KN-170C
XLH883 Sportster	54 CI	HD-1388	KN-170
		HD-1388	KN-170C
XLH883 Sportster Custom	54 CI	HD-1388	KN-170
		HD-1388	KN-170C
XLH883 Sportster Hugger	54 CI	HD-1388	KN-170
		HD-1388	KN-170C
XLH1200 Sportster	74 CI	HD-1388	KN-170
		HD-1388	KN-170C

2001 HARLEY DAVIDSON

Vehicle	Engine Type	Air Filter	Oil Filter
FLHR Road King	88 CI	HD-1499	KN-171B
		HD-1499	KN-171C
FLHRCI Road King Classic F/I	88 CI	HD-8899	KN-171B

2001 HARLEY DAVIDSON

Vehicle	Engine Type	Air Filter	Oil Filter
FLHRCI Road King Classic F/I	88 CI	HD-8899	KN-171C
FLHRI Electra Glide Road King F/I	88 CI	HD-8899	KN-171B
		HD-8899	KN-171C
FLHRI Road King F/I	88 CI		KN-171B
			KN-171C
FLHT Electra Glide	82 CI		KN-171B
			KN-171C
FLHT Electra Glide Standard	88 CI	HD-1499	KN-171B
		HD-1499	KN-171C
FLHTC Electra Glide Classic	88 CI	HD-1499	KN-171B
		HD-1499	KN-171C
FLHTCI Electra Glide Classic F/I	88 CI	HD-8899	KN-171B
		HD-8899	KN-171C
FLHTCUI Electra Glide Ultra Classic F/I	88 CI	HD-8899	KN-171B
		HD-8899	KN-171C
FLSTC Heritage Softail Classic	88 CI	HD-1499	KN-171B
		HD-1499	KN-171C
FLSTCI Heritage Softail Classic F/I	88 CI	HD-8899	KN-171B
		HD-8899	KN-171C
FLSTF Fat Boy	88 CI	HD-1499	KN-171B
		HD-1499	KN-171C
FLSTFI Fat Boy F/I	88 CI	HD-1499	KN-171B
		HD-1499	KN-171C
FLSTS Heritage Springer	88 CI	HD-1499	KN-171B
		HD-1499	KN-171C
FLSTSI Heritage Springer F/I	88 CI	HD-1499	KN-171B
		HD-1499	KN-171C
FLTR Road Glide	88 CI	HD-1499	KN-171B
		HD-1499	KN-171C
FLTRI Road Glide F/I	88 CI	HD-8899	KN-171B
		HD-8899	KN-171C
FLTRSEI2 Screamin Eagle Road Glide	95 CI	HD-0800	KN-171B
		HD-0800	KN-171C
FXD Dyna Super Glide	88 CI	HD-1499	KN-171B
		HD-1499	KN-171C
FXDL Dyna Low Rider	88 CI	HD-1499	KN-171B
		HD-1499	KN-171C
FXDWG Dyna Wide Glide	88 CI	HD-1499	KN-171B
		HD-1499	KN-171C
FXDWG3	88 CI	HD-1499	KN-171B
		HD-1499	KN-171C
FXDX Dyna Super Glide Sport	88 CI	HD-1499	KN-171B

*Indicates 2 filters required ♦ - Intake kit available - see page 80 Applications updated daily at knfilters.com

HARLEY DAVIDSON AIR & OIL FILTERS

Vehicle	Engine Type	Air Filter	Oil Filter
2001 HARLEY DAVIDSON			
FXDX Dyna Super Glide Sport	88 CI	HD-1499	KN-171C
FXDXT Dyna Super Glide T-Sport	88 CI	HD-1499	KN-171B
		HD-1499	KN-171C
FXST Softail Standard	88 CI	HD-1499	KN-171B
		HD-1499	KN-171C
FXSTB Night Train	88 CI	HD-1499	KN-171B
		HD-1499	KN-171C
FXSTBI Night Train F/I	88 CI	HD-1499	KN-171B
		HD-1499	KN-171C
FXSTD Softail Deuce	88 CI	HD-1499	KN-171B
		HD-1499	KN-171C
FXSTDI Softail Deuce F/I	88 CI	HD-1499	KN-171B
		HD-1499	KN-171C
FXSTI Softail Standard F/I	88 CI	HD-1499	KN-171B
		HD-1499	KN-171C
FXSTS Springer Softail	88 CI	HD-1499	KN-171B
		HD-1499	KN-171C
FXSTSI Springer Softail F/I	88 CI	HD-1499	KN-171B
		HD-1499	KN-171C
XL1200C Sportster Custom	74 CI	HD-1388	KN-170
		HD-1388	KN-170C
XL1200S Sportster Sport	74 CI	HD-1388	KN-170
		HD-1388	KN-170C
XLH883 Sportster	54 CI	HD-1388	KN-170
		HD-1388	KN-170C
XLH883 Sportster Custom	54 CI	HD-1388	KN-170
		HD-1388	KN-170C
XLH883 Sportster Hugger	54 CI	HD-1388	KN-170
		HD-1388	KN-170C
XLH1200 Sportster	74 CI	HD-1388	KN-170
		HD-1388	KN-170C
2000 HARLEY DAVIDSON			
FLHR Road King	88 CI	HD-1499	KN-171B
		HD-1499	KN-171C
FLHRCI Road King Classic F/I	88 CI	HD-8899	KN-171B
		HD-8899	KN-171C
FLHRI Electra Glide Road King F/I	88 CI	HD-8899	KN-171B
		HD-8899	KN-171C
FLHT Electra Glide	82 CI		KN-171B
			KN-171C
FLHT Electra Glide Standard	88 CI	HD-1499	KN-171B

Vehicle	Engine Type	Air Filter	Oil Filter
2000 HARLEY DAVIDSON			
FLHT Electra Glide Standard	88 CI	HD-1499	KN-171C
FLHTC Electra Glide Classic	88 CI	HD-1499	KN-171B
		HD-1499	KN-171C
FLHTCI Electra Glide Classic F/I	88 CI	HD-8899	KN-171B
		HD-8899	KN-171C
FLHTCUI Electra Glide Ultra Classic F/I	88 CI	HD-8899	KN-171B
		HD-8899	KN-171C
FLSTC Heritage Softail Classic	88 CI	HD-1499	KN-171B
		HD-1499	KN-171C
FLSTF Fat Boy	88 CI	HD-1499	KN-171B
		HD-1499	KN-171C
FLSTS Heritage Springer	88 CI	HD-1499	KN-171B
		HD-1499	KN-171C
FLTR Road Glide	88 CI	HD-1499	KN-171B
		HD-1499	KN-171C
FLTRI Road Glide F/I	88 CI	HD-8899	KN-171B
		HD-8899	KN-171C
FXD Dyna Super Glide	88 CI	HD-1499	KN-171B
		HD-1499	KN-171C
FXDL Dyna Low Rider	88 CI	HD-1499	KN-171B
		HD-1499	KN-171C
FXDS Dyna Convertible	88 CI	HD-1499	KN-171B
		HD-1499	KN-171C
FXDWG Dyna Wide Glide	88 CI	HD-1499	KN-171B
		HD-1499	KN-171C
FXDX Dyna Super Glide Sport	88 CI	HD-1499	KN-171B
		HD-1499	KN-171C
FXST Softail Standard	88 CI	HD-1499	KN-171B
		HD-1499	KN-171C
FXSTB Night Train	88 CI	HD-1499	KN-171B
		HD-1499	KN-171C
FXSTC Softail Custom	82 CI		KN-171B
			KN-171C
FXSTD Softail Deuce	88 CI	HD-1499	KN-171B
		HD-1499	KN-171C
FXSTS Springer Softail	88 CI	HD-1499	KN-171B
		HD-1499	KN-171C
XL53C Sportster Custom	54 CI	HD-1388	KN-170
		HD-1388	KN-170C
XL1200C Sportster Custom	74 CI	HD-1388	KN-170

*Indicates 2 filters required ♦ - Intake kit available - see page 80 Applications updated daily at knfilters.com

Partial Listing - Complete List of Vehicles and Applications at knfilters.com

2000 HARLEY DAVIDSON

Vehicle	Engine Type	Air Filter	Oil Filter
XL1200C Sportster Custom	74 CI	HD-1388	KN-170C
XL1200S Sportster Sport	74 CI	HD-1388	KN-170
		HD-1388	KN-170C
XLH883 Sportster	54 CI	HD-1388	KN-170
		HD-1388	KN-170C
XLH883 Sportster Custom	54 CI	HD-1388	KN-170
		HD-1388	KN-170C
XLH883 Sportster Hugger	54 CI	HD-1388	KN-170
		HD-1388	KN-170C
XLH883R Sportster Flat Track	54 CI	HD-1388	KN-170
		HD-1388	KN-170C
XLH1200 Sportster	74 CI	HD-1388	KN-170
		HD-1388	KN-170C

1999 HARLEY DAVIDSON

Vehicle	Engine Type	Air Filter	Oil Filter
FLHR Road King	88 CI	HD-1499	KN-171B
		HD-1499	KN-171C
FLHRCI Road King Classic F/I	88 CI	HD-8899	KN-171B
		HD-8899	KN-171C
FLHT Electra Glide	82 CI		KN-170
			KN-170C
FLHT Electra Glide Standard	88 CI	HD-1499	KN-171B
		HD-1499	KN-171C
FLHTC Electra Glide Classic	88 CI	HD-1499	KN-171B
		HD-1499	KN-171C
FLHTCI Electra Glide Classic F/I	88 CI	HD-8899	KN-171B
		HD-8899	KN-171C
FLHTCUI Electra Glide Ultra Classic F/I	88 CI	HD-8899	KN-171B
		HD-8899	KN-171C
FLSTC Heritage Softail Classic	82 CI	HD-1390	KN-170
		HD-1390	KN-170C
FLSTC Softail - Non-US	82 CI	HD-1396	
FLSTF Fat Boy	82 CI	HD-1390	KN-170
		HD-1390	KN-170C
FLSTF Softail - Non-US	82 CI	HD-1396	
FLSTS Heritage Springer	82 CI	HD-1390	KN-170
		HD-1390	KN-170C
FLSTS Softail - Non-US	82 CI	HD-1396	
FLTR Road Glide	88 CI	HD-1499	KN-171B
		HD-1499	KN-171C
FLTRI Road Glide F/I	88 CI	HD-8899	KN-171B
		HD-8899	KN-171C
FXD Dyna Super Glide	88 CI	HD-1499	KN-171B

1999 HARLEY DAVIDSON

Vehicle	Engine Type	Air Filter	Oil Filter
FXD Dyna Super Glide	88 CI	HD-1499	KN-171C
FXDL Dyna Low Rider	88 CI	HD-1499	KN-171B
		HD-1499	KN-171C
FXDS Dyna Convertible	88 CI	HD-1499	KN-171B
		HD-1499	KN-171C
FXDWG Dyna Wide Glide	88 CI	HD-1499	KN-171B
		HD-1499	KN-171C
FXDX Dyna Super Glide Sport	88 CI	HD-1499	KN-171B
		HD-1499	KN-171C
FXST Softail - Non-US	82 CI	HD-1396	
FXST Softail Standard	82 CI	HD-1390	
FXSTB Night Train	82 CI	HD-1390	KN-170
		HD-1390	KN-170C
FXSTC Softail Custom	82 CI	HD-1390	KN-170
		HD-1390	KN-170C
FXSTS Springer Softail	82 CI	HD-1390	KN-170
		HD-1390	KN-170C
XL53C Sportster Custom	54 CI		KN-170
			KN-170C
XL1200C Sportster Custom	74 CI	HD-1388	KN-170
		HD-1388	KN-170C
XL1200S Sportster Sport	74 CI	HD-1388	KN-170
		HD-1388	KN-170C
XLH883 Sportster	54 CI	HD-1388	KN-170
		HD-1388	KN-170C
XLH883 Sportster Custom	54 CI	HD-1388	KN-170
		HD-1388	KN-170C
XLH883 Sportster Hugger	54 CI	HD-1388	KN-170
		HD-1388	KN-170C
XLH1200 Sportster	74 CI	HD-1388	KN-170
		HD-1388	KN-170C

1998 HARLEY DAVIDSON

Vehicle	Engine Type	Air Filter	Oil Filter
FLHR Road King	82 CI		KN-170
			KN-170C
FLHRI Electra Glide Road King F/I	82 CI	HD-1395	
FLHT Electra Glide	82 CI		KN-170
			KN-170C
FLHT Electra Glide Standard	82 CI	HD-1390	KN-170
		HD-1390	KN-170C
FLHTC Electra Glide Classic	82 CI	HD-1390	KN-170

Vehicle	Engine Type	Air Filter	Oil Filter
1998 HARLEY DAVIDSON			
FLHTC Electra Glide Classic	82 CI	HD-1390	KN-170C
FLHTCI Electra Glide Classic F/I	82 CI	HD-1395	KN-170
		HD-1395	KN-170C
FLHTC-U Touring - Non-US	82 CI	HD-1396	
FLHTCUI Ultra Classic Electra Glide F/I	82 CI	HD-1395	KN-170
		HD-1395	KN-170C
FLSTC Heritage Softail Classic	82 CI	HD-1390	KN-170
		HD-1390	KN-170C
FLSTC Softail - Non-US	82 CI	HD-1396	
FLSTF Fat Boy	82 CI	HD-1390	KN-170
		HD-1390	KN-170C
FLSTF Softail - Non-US	82 CI	HD-1396	
FLSTN Heritage Softail Special	82 CI	HD-1390	KN-170
		HD-1390	KN-170C
FLSTS Heritage Springer	82 CI	HD-1390	KN-170
		HD-1390	KN-170C
FLSTS Softail - Non-US	82 CI	HD-1396	
FLTR Road Glide	82 CI	HD-1390	KN-170
		HD-1390	KN-170C
FLTRI Road Glide F/I	82 CI	HD-1395	KN-170
		HD-1395	KN-170C
FXD Dyna Super Glide	82 CI	HD-1390	KN-173C
FXDL Dyna Low Rider	82 CI	HD-1390	KN-173C
FXDS Dyna - Non-US	82 CI	HD-1396	
FXDS Dyna Convertible	82 CI	HD-1390	KN-173C
FXDWG Dyna - Non-US	82 CI	HD-1396	
FXDWG Dyna Wide Glide	82 CI	HD-1390	KN-173C
FXSTC Softail - Non-US	82 CI	HD-1396	
FXSTC Softail Custom	82 CI	HD-1390	KN-170
		HD-1390	KN-170C
FXSTS Springer Softail	82 CI	HD-1390	KN-170
		HD-1390	KN-170C
XL1200C Sportster Custom	74 CI	HD-1388	KN-170
		HD-1388	KN-170C
XL1200S Sportster Sport	74 CI	HD-1388	KN-170
		HD-1388	KN-170C
XLH883 Sportster	54 CI	HD-1388	KN-170
		HD-1388	KN-170C
XLH883 Sportster Hugger	54 CI	HD-1388	KN-170
1998 HARLEY DAVIDSON			
XLH883 Sportster Hugger	54 CI	HD-1388	KN-170C
XLH1200 Sportster	74 CI	HD-1388	KN-170
		HD-1388	KN-170C
1997 HARLEY DAVIDSON			
FLHR Road King	82 CI		KN-170
			KN-170C
FLHR Touring - Non-US	82 CI	HD-1396	
FLHRI Electra Glide Road King F/I	82 CI	HD-1395	
FLHT Electra Glide	82 CI		KN-170
			KN-170C
FLHT Electra Glide Standard	82 CI	HD-1390	KN-170
		HD-1390	KN-170C
FLHTC Electra Glide Classic	82 CI	HD-1390	KN-170
		HD-1390	KN-170C
FLHTCI Electra Glide Classic F/I	82 CI	HD-1395	KN-170
		HD-1395	KN-170C
FLHTCU Electra Glide Ultra Classic	82 CI	HD-1390	KN-170
		HD-1390	KN-170C
FLHTCUI Ultra Classic Electra Glide F/I	82 CI	HD-1395	KN-170
		HD-1395	KN-170C
FLSTC Heritage Softail Classic	82 CI	HD-1390	KN-170
		HD-1390	KN-170C
FLSTC Softail - Non-US	82 CI	HD-1396	
FLSTF Fat Boy	82 CI	HD-1390	KN-170
		HD-1390	KN-170C
FLSTF Softail - Non-US	82 CI	HD-1396	
FLSTN Heritage Softail Special	82 CI	HD-1390	KN-170
		HD-1390	KN-170C
FLSTS Heritage Springer	82 CI	HD-1390	KN-170
		HD-1390	KN-170C
FLSTS Softail - Non-US	82 CI	HD-1396	
FXD Dyna Super Glide	82 CI	HD-1390	KN-173C
FXDL Dyna Low Rider	82 CI	HD-1390	KN-173C
FXDS Dyna Convertible	82 CI	HD-1390	KN-173C
FXDWG Dyna - Non-US	82 CI	HD-1396	
FXDWG Dyna Wide Glide	82 CI	HD-1390	KN-173C
FXSTC Softail Custom	82 CI	HD-1390	KN-170
		HD-1390	KN-170C

*Indicates 2 filters required ♦ - Intake kit available - see page 80 Applications updated daily at knfilters.com

Partial Listing - Complete List of Vehicles and Applications at knfilters.com

1997 HARLEY DAVIDSON

Vehicle	Engine Type	Air Filter	Oil Filter
FXSTS Springer Softail	82 CI	HD-1390	KN-170
		HD-1390	KN-170C
FXSTSB Bad Boy	82 CI	HD-1390	
XL1200C Sportster Custom	74 CI	HD-1388	KN-170
		HD-1388	KN-170C
XL1200S Sportster Sport	74 CI	HD-1388	KN-170
		HD-1388	KN-170C
XLH883 Sportster	54 CI	HD-1388	KN-170
		HD-1388	KN-170C
XLH883 Sportster Hugger	54 CI	HD-1388	KN-170
		HD-1388	KN-170C
XLH1200 Sportster	74 CI	HD-1388	KN-170
		HD-1388	KN-170C

1996 HARLEY DAVIDSON

Vehicle	Engine Type	Air Filter	Oil Filter
FLHR Road King	82 CI		KN-170
			KN-170C
FLHR Touring - Non-US	82 CI	HD-1396	
FLHRI Electra Glide Road King F/I	82 CI	HD-1395	KN-171B
		HD-1395	KN-171C
FLHT Electra Glide	82 CI		KN-170
			KN-170C
FLHT Electra Glide Standard	82 CI	HD-1390	KN-170
		HD-1390	KN-170C
FLHT Touring - Non-US	82 CI	HD-1396	
FLHTC Electra Glide Classic	82 CI	HD-1390	KN-170
		HD-1390	KN-170C
FLHTCI Electra Glide Classic F/I	82 CI	HD-1395	KN-170
		HD-1395	KN-170C
FLHTCU Electra Glide Ultra Classic	82 CI	HD-1390	KN-170
		HD-1390	KN-170C
FLHTCUI Ultra Classic Electra Glide F/I	82 CI	HD-1395	KN-170
		HD-1395	KN-170C
FLSTC Heritage Softail Classic	82 CI	HD-1390	KN-170
		HD-1390	KN-170C
FLSTC Softail - Non-US	82 CI	HD-1396	
FLSTF Fat Boy	82 CI	HD-1390	KN-170
		HD-1390	KN-170C
FLSTF Softail - Non-US	82 CI	HD-1396	
FLSTN Heritage Softail Special	82 CI	HD-1390	KN-170
		HD-1390	KN-170C

1996 HARLEY DAVIDSON

Vehicle	Engine Type	Air Filter	Oil Filter
FXD Dyna Super Glide	82 CI	HD-1390	KN-173C
FXDL Dyna Low Rider	82 CI	HD-1390	KN-173C
FXDS Dyna Convertible	82 CI	HD-1390	KN-173C
FXDWG Dyna Wide Glide	82 CI	HD-1390	KN-173C
FXSTC Softail Custom	82 CI	HD-1390	KN-170
		HD-1390	KN-170C
FXSTS Springer Softail	82 CI	HD-1390	KN-170
		HD-1390	KN-170C
FXSTSB Bad Boy	82 CI	HD-1390	KN-170
		HD-1390	KN-170C
XL1200C Sportster Custom	74 CI	HD-1388	KN-170
		HD-1388	KN-170C
XL1200S Sportster Sport	74 CI	HD-1388	KN-170
		HD-1388	KN-170C
XLH883 Sportster	54 CI	HD-1388	KN-170
		HD-1388	KN-170C
XLH883 Sportster Hugger	54 CI	HD-1388	KN-170
		HD-1388	KN-170C
XLH1200 Sportster	74 CI	HD-1388	KN-170
		HD-1388	KN-170C

1995 HARLEY DAVIDSON

Vehicle	Engine Type	Air Filter	Oil Filter
FLHR Touring - Non-US	82 CI	HD-1396	
FLHT Electra Glide Standard	82 CI	HD-1390	KN-170
		HD-1390	KN-170C
FLHTC Electra Glide Classic	82 CI	HD-1390	KN-170
		HD-1390	KN-170C
FLHTCI Ultra Classic Electra Glide Annv.	82 CI	HD-1395	
FLHTCU Electra Glide Ultra Classic	82 CI	HD-1390	KN-170
		HD-1390	KN-170C
FLHTCUI Ultra Classic Electra Glide F/I	82 CI		KN-170
			KN-170C
FLSTC Heritage Softail Classic	82 CI	HD-1390	KN-170
		HD-1390	KN-170C
FLSTC Softail - Non-US	82 CI	HD-1396	
FLSTF Fat Boy	82 CI	HD-1390	KN-170
		HD-1390	KN-170C
FLSTF Softail - Non-US	82 CI	HD-1396	
FLSTN Heritage Softail Nostalgia	82 CI	HD-1390	

1995 HARLEY DAVIDSON

Vehicle	Engine Type	Air Filter	Oil Filter
FLSTN Heritage Softail Special	82 CI		KN-170
			KN-170C
FLTCU Ultra Tour Glide Classic	82 CI	HD-1390	KN-170
		HD-1390	KN-170C
FXD Dyna Super Glide	82 CI	HD-1390	
FXDL Dyna Low Rider	82 CI	HD-1390	KN-173C
FXDS Dyna - Non-US	82 CI	HD-1396	
FXDS Dyna Low Rider Conv.	82 CI	HD-1390	
FXDWG Dyna - Non-US	82 CI	HD-1396	
FXDWG Dyna Wide Glide	82 CI	HD-1390	KN-173C
FXSTC Softail Custom	82 CI	HD-1390	KN-170
		HD-1390	KN-170C
FXSTS Springer Softail	82 CI	HD-1390	KN-170
		HD-1390	KN-170C
FXSTSB Bad Boy	82 CI	HD-1390	
XLH883 Sportster	54 CI	HD-1388	KN-170
		HD-1388	KN-170C
XLH883 Sportster Deluxe	54 CI	HD-1388	KN-170
		HD-1388	KN-170C
XLH883 Sportster Hugger	54 CI	HD-1388	KN-170
		HD-1388	KN-170C
XLH1200 Sportster	74 CI	HD-1388	KN-170
		HD-1388	KN-170C

1994 HARLEY DAVIDSON

Vehicle	Engine Type	Air Filter	Oil Filter
FLHTC Electra Glide Classic	82 CI	HD-1390	KN-170
		HD-1390	KN-170C
FLHTCU Electra Glide Ultra Classic	82 CI	HD-1390	KN-170
		HD-1390	KN-170C
FLHTCUI Ultra Classic Electra Glide F/I	82 CI		KN-170
			KN-170C
FLSTC Heritage Softail Classic	82 CI	HD-1390	KN-170
		HD-1390	KN-170C
FLSTF Fat Boy	82 CI	HD-1390	KN-170
		HD-1390	KN-170C
FLSTN Heritage Softail Nostalgia	82 CI	HD-1390	
FLSTN Heritage Softail Special	82 CI		KN-170
			KN-170C
FXDL Dyna Low Rider	82 CI	HD-1390	KN-173C

1994 HARLEY DAVIDSON

Vehicle	Engine Type	Air Filter	Oil Filter
FXDS Dyna Low Rider Conv.	82 CI	HD-1390	
FXDWG Dyna Wide Glide	82 CI	HD-1390	KN-173C
FXLR Low Rider Custom	82 CI	HD-1390	KN-170
		HD-1390	KN-170C
FXR Super Glide	82 CI		KN-170
			KN-170C
FXRS Low Rider	82 CI		KN-170
			KN-170C
FXRS Low Rider Conv.	82 CI		KN-170
			KN-170C
FXSTC Softail Custom	82 CI	HD-1390	KN-170
		HD-1390	KN-170C
FXSTS Springer Softail	82 CI	HD-1390	KN-170
		HD-1390	KN-170C
XLH883 Sportster	54 CI	HD-1388	KN-170
		HD-1388	KN-170C
XLH883 Sportster Deluxe	54 CI	HD-1388	KN-170
		HD-1388	KN-170C
XLH883 Sportster Hugger	54 CI	HD-1388	KN-170
		HD-1388	KN-170C
XLH1200 Sportster	74 CI	HD-1388	KN-170
		HD-1388	KN-170C

1993 HARLEY DAVIDSON

Vehicle	Engine Type	Air Filter	Oil Filter
FLHS Electra Glide Sport	82 CI	HD-1390	KN-170
		HD-1390	KN-170C
FLHTC Electra Glide Classic	82 CI	HD-1390	KN-170
		HD-1390	KN-170C
FLHTCU Electra Glide Ultra Classic	82 CI	HD-1390	KN-170
		HD-1390	KN-170C
FLHTCU Electra Glide Ultra Classic Annv.	82 CI	HD-1390	KN-170
		HD-1390	KN-170C
FLHTCUI Ultra Classic Electra Glide F/I	82 CI		KN-170
			KN-170C
FLSTC Heritage Softail Classic	82 CI	HD-1390	KN-170
		HD-1390	KN-170C
FLSTF Fat Boy	82 CI	HD-1390	KN-170
		HD-1390	KN-170C
FLSTN Heritage Softail Nostalgia	82 CI	HD-1390	

*Indicates 2 filters required ♦ - Intake kit available - see page 80 Applications updated daily at knfilters.com

Partial Listing - Complete List of Vehicles and Applications at knfilters.com

1993 HARLEY DAVIDSON

Vehicle	Engine Type	Air Filter	Oil Filter
FLTCU Ultra Tour Glide Classic	82 CI	HD-1390	KN-170
		HD-1390	KN-170C
FXDL Dyna Low Rider	82 CI	HD-1390	KN-173C
FXDWG Dyna Wide Glide	82 CI	HD-1390	KN-173C
FXDWG Dyna Wide Glide Annv.	82 CI	HD-1390	
FXR Super Glide	82 CI	HD-1390	KN-170
		HD-1390	KN-170C
FXRS Low Rider	82 CI		KN-170
			KN-170C
FXRS Low Rider Conv.	82 CI	HD-1390	KN-170
		HD-1390	KN-170C
FXRS-SP Low Rider Sport	82 CI	HD-1390	KN-171B
		HD-1390	KN-171C
FXSTC Softail Custom	82 CI	HD-1390	KN-170
		HD-1390	KN-170C
FXSTS Springer Softail	82 CI	HD-1390	KN-170
		HD-1390	KN-170C
XLH Sportster Annv.	74 CI	HD-1388	KN-170
		HD-1388	KN-170C
XLH883 Sportster	54 CI	HD-1388	KN-170
		HD-1388	KN-170C
XLH883 Sportster Deluxe	54 CI	HD-1388	KN-170
		HD-1388	KN-170C
XLH883 Sportster Hugger	54 CI	HD-1388	KN-170
		HD-1388	KN-170C
XLH1200 Sportster	74 CI	HD-1388	KN-170
		HD-1388	KN-170C

1992 HARLEY DAVIDSON

Vehicle	Engine Type	Air Filter	Oil Filter
FLHS Electra Glide Sport	82 CI	HD-1390	KN-170
		HD-1390	KN-170C
FLHTC Electra Glide Classic	82 CI	HD-1390	KN-170
		HD-1390	KN-170C
FLHTCU Electra Glide Ultra Classic	82 CI	HD-1390	KN-170
		HD-1390	KN-170C
FLSTC Heritage Softail Classic	82 CI	HD-1390	KN-170
		HD-1390	KN-170C
FLSTF Fat Boy	82 CI	HD-1390	KN-170
		HD-1390	KN-170C
FLTCU Ultra Tour Glide Classic	82 CI	HD-1390	KN-170
		HD-1390	KN-170C
FXDB Dyna Glide Daytona	82 CI	HD-1390	KN-173C

1992 HARLEY DAVIDSON

Vehicle	Engine Type	Air Filter	Oil Filter
FXDC Dyna Glide Custom	82 CI	HD-1390	KN-173C
FXLR Low Rider Custom	82 CI	HD-1390	KN-170
		HD-1390	KN-170C
FXR Super Glide	82 CI	HD-1390	KN-170
		HD-1390	KN-170C
FXRS Low Rider	82 CI	HD-1390	KN-170
		HD-1390	KN-170C
FXRS Low Rider Conv.	82 CI	HD-1390	KN-170
		HD-1390	KN-170C
FXRS-SP Low Rider Sport	82 CI	HD-1390	KN-171B
		HD-1390	KN-171C
FXSTC Softail Custom	82 CI	HD-1390	KN-170
		HD-1390	KN-170C
FXSTS Springer Softail	82 CI	HD-1390	KN-170
		HD-1390	KN-170C
XLH883 Sportster	54 CI	HD-1388	KN-170
		HD-1388	KN-170C
XLH883 Sportster Deluxe	54 CI	HD-1388	KN-170
		HD-1388	KN-170C
XLH883 Sportster Hugger	54 CI	HD-1388	KN-170
		HD-1388	KN-170C
XLH1200 Sportster	74 CI	HD-1388	KN-170
		HD-1388	KN-170C

1991 HARLEY DAVIDSON

Vehicle	Engine Type	Air Filter	Oil Filter
FLHS Electra Glide Sport	82 CI	HD-1390	KN-170
		HD-1390	KN-170C
FLHTC Electra Glide Classic	82 CI	HD-1390	KN-170
		HD-1390	KN-170C
FLHTCU Electra Glide Ultra Classic	82 CI	HD-1390	KN-170
		HD-1390	KN-170C
FLSTC Heritage Softail Classic	82 CI	HD-1390	KN-170
		HD-1390	KN-170C
FLSTF Fat Boy	82 CI	HD-1390	KN-170
		HD-1390	KN-170C
FLTCU Ultra Tour Glide Classic	82 CI	HD-1390	KN-170
		HD-1390	KN-170C
FXDB Dyna Glide Sturgis	82 CI	HD-1390	KN-173C
FXLR Low Rider Custom	82 CI	HD-1390	KN-170
		HD-1390	KN-170C
FXR Super Glide	82 CI	HD-1390	KN-170
		HD-1390	KN-170C
FXRS Low Rider	82 CI	HD-1390	KN-170

*Indicates 2 filters required ♦ - Intake kit available - see page 80 Applications updated daily at knfilters.com

HARLEY DAVIDSON AIR & OIL FILTERS

Vehicle	Engine Type	Air Filter	Oil Filter
1991 HARLEY DAVIDSON			
FXRS Low Rider	82 CI	HD-1390	KN-170C
FXRS Low Rider Conv.	82 CI	HD-1390	KN-170
		HD-1390	KN-170C
FXRS-SP Low Rider Sport	82 CI	HD-1390	KN-171B
		HD-1390	KN-171C
FXRT Sport Glide	82 CI	HD-1390	
FXSTC Softail Custom	82 CI	HD-1390	KN-170
		HD-1390	KN-170C
FXSTS Springer Softail	82 CI	HD-1390	KN-170
		HD-1390	KN-170C
XLH883 Sportster	54 CI	HD-1388	KN-170
		HD-1388	KN-170C
XLH883 Sportster Deluxe	54 CI	HD-1388	KN-170
		HD-1388	KN-170C
XLH883 Sportster Hugger	54 CI	HD-1388	KN-170
		HD-1388	KN-170C
XLH1200 Sportster	74 CI	HD-1388	KN-170
		HD-1388	KN-170C
1990 HARLEY DAVIDSON			
FLHS Electra Glide Sport	82 CI	HD-1390	KN-170
		HD-1390	KN-170C
FLHTC Electra Glide Classic	82 CI	HD-1390	KN-170
		HD-1390	KN-170C
FLHTCU Electra Glide Ultra Classic	82 CI	HD-1390	KN-170
		HD-1390	KN-170C
FLHTCUI Ultra Classic Electra Glide F/I	82 CI		KN-170
			KN-170C
FLST Heritage Softail	82 CI	HD-1390	KN-170
		HD-1390	KN-170C
FLSTC Heritage Softail Classic	82 CI	HD-1390	KN-170
		HD-1390	KN-170C
FLSTF Fat Boy	82 CI	HD-1390	KN-170
		HD-1390	KN-170C
FLT	82 CI		KN-170
			KN-170C
FLTC Tour Glide Classic	82 CI	HD-1390	KN-170
		HD-1390	KN-170C
FLTCU Ultra Tour Glide Classic	82 CI	HD-1390	KN-170
		HD-1390	KN-170C
FXLR Low Rider Custom	82 CI	HD-1390	KN-170

Vehicle	Engine Type	Air Filter	Oil Filter
1990 HARLEY DAVIDSON			
FXLR Low Rider Custom	82 CI	HD-1390	KN-170C
FXR Super Glide	82 CI	HD-1390	KN-170
		HD-1390	KN-170C
FXRS Low Rider	82 CI	HD-1390	KN-170
		HD-1390	KN-170C
FXRS Low Rider Conv.	82 CI	HD-1390	KN-170
		HD-1390	KN-170C
FXRS-SP Low Rider Sport	82 CI	HD-1390	KN-171B
		HD-1390	KN-171C
FXRT Sport Glide	82 CI	HD-1390	
FXST Softail	82 CI	HD-1390	KN-170
		HD-1390	KN-170C
FXSTC Softail Custom	82 CI	HD-1390	KN-170
		HD-1390	KN-170C
FXSTS Springer Softail	82 CI	HD-1390	KN-170
		HD-1390	KN-170C
XLH883 Sportster	54 CI	HD-1388	KN-170
		HD-1388	KN-170C
XLH883 Sportster Deluxe	54 CI	HD-1388	KN-170
		HD-1388	KN-170C
XLH883 Sportster Hugger	54 CI	HD-1388	KN-170
		HD-1388	KN-170C
XLH1200 Sportster	74 CI	HD-1388	KN-170
		HD-1388	KN-170C
1989 HARLEY DAVIDSON			
FLHS Electra Glide Sport	82 CI	HD-2086	KN-170
		HD-2086	KN-170C
FLHT Electra Glide	82 CI		KN-170
			KN-170C
FLHTC Electra Glide Classic	82 CI	HD-2086	KN-170
		HD-2086	KN-170C
FLHTCU Electra Glide Ultra Classic	82 CI	HD-2086	KN-170
		HD-2086	KN-170C
FLST Heritage Softail	82 CI	HD-2086	KN-170
		HD-2086	KN-170C
FLSTC Heritage Softail Classic	82 CI	HD-2086	KN-170
		HD-2086	KN-170C
FLSTF Fat Boy	82 CI		KN-170
			KN-170C
FLTC Tour Glide Classic	82 CI	HD-2086	KN-170
		HD-2086	KN-170C
FLTCU Ultra Tour Glide Classic	82 CI	HD-2086	KN-170
		HD-2086	KN-170C

*Indicates 2 filters required ♦ - Intake kit available - see page 80 Applications updated daily at knfilters.com

Partial Listing - Complete List of Vehicles and Applications at knfilters.com

1989 HARLEY DAVIDSON

Vehicle	Engine Type	Air Filter	Oil Filter
FXLR Low Rider Custom	82 CI	HD-2086	KN-170
		HD-2086	KN-170C
FXR Super Glide	82 CI	HD-2086	KN-170
		HD-2086	KN-170C
FXRS Low Rider	82 CI	HD-2086	KN-170
		HD-2086	KN-170C
FXRS Low Rider Conv.	82 CI	HD-2086	
FXST Softail	82 CI	HD-2086	KN-170
		HD-2086	KN-170C
FXSTC Softail Custom	82 CI	HD-2086	KN-170
		HD-2086	KN-170C
FXSTS Springer Softail	82 CI	HD-2086	KN-170
		HD-2086	KN-170C
XLH883 Sportster	54 CI	HD-1388	KN-170
		HD-1388	KN-170C
XLH883 Sportster Deluxe	54 CI	HD-1388	KN-170
		HD-1388	KN-170C
XLH883 Sportster Hugger	54 CI	HD-1388	KN-170
		HD-1388	KN-170C
XLH1200 Sportster	74 CI	HD-1388	KN-170
		HD-1388	KN-170C

1988 HARLEY DAVIDSON

Vehicle	Engine Type	Air Filter	Oil Filter
FLHS Electra Glide Sport	82 CI	HD-2086	KN-170
		HD-2086	KN-170C
FLHT Electra Glide	82 CI		KN-170
			KN-170C
FLHTC Chrome	82 CI	HD-2086	
FLHTC Electra Glide Classic	82 CI	HD-2086	KN-170
		HD-2086	KN-170C
FLHTCU Electra Glide Ultra Classic	82 CI		KN-170
			KN-170C
FLST Heritage Softail	82 CI	HD-2086	KN-170
		HD-2086	KN-170C
FLSTC Heritage Softail Classic	82 CI	HD-2086	KN-170
		HD-2086	KN-170C
FLTC Tour Glide Classic	82 CI	HD-2086	KN-170
		HD-2086	KN-170C
FXLR Low Rider Custom	82 CI	HD-2086	KN-170
		HD-2086	KN-170C
FXR Super Glide	82 CI	HD-2086	KN-170
		HD-2086	KN-170C
FXRS Low Rider	82 CI	HD-2086	KN-170
		HD-2086	KN-170C
FXRS Low Rider Sport	82 CI	HD-2086	
FXST Softail	82 CI	HD-2086	KN-170
FXST Softail	82 CI	HD-2086	KN-170C
FXSTC Softail Custom	82 CI	HD-2086	KN-170
		HD-2086	KN-170C
XLH883 Sportster	54 CI	HD-1388	KN-170
		HD-1388	KN-170C
XLH883 Sportster Deluxe	54 CI	HD-1388	KN-170
		HD-1388	KN-170C
XLH883 Sportster Hugger	54 CI	HD-1388	KN-170
		HD-1388	KN-170C
XLH1000 Sportster	61 CI		KN-170
			KN-170C
XLH1200 Sportster	74 CI	HD-1388	KN-170
		HD-1388	KN-170C

1987 HARLEY DAVIDSON

Vehicle	Engine Type	Air Filter	Oil Filter
FLHS Electra Glide Sport	82 CI	HD-2086	KN-170
		HD-2086	KN-170C
FLHTC Electra Glide Classic	82 CI	HD-2086	KN-170
		HD-2086	KN-170C
FLST Heritage Softail	82 CI	HD-2086	KN-170
		HD-2086	KN-170C
FLSTC Heritage Softail Classic	82 CI		KN-170
			KN-170C
FLTC Chrome TT	82 CI	HD-2086	KN-170
		HD-2086	KN-170C
FLTC Tour Glide Classic	82 CI	HD-2086	KN-170
		HD-2086	KN-170C
FXLR Low Rider Custom	82 CI	HD-2086	KN-170
		HD-2086	KN-170C
FXR Super Glide	82 CI	HD-2086	KN-170
		HD-2086	KN-170C
FXRC Low Glide Custom	82 CI	HD-2086	KN-170
		HD-2086	KN-170C
FXRS Low Rider	82 CI	HD-2086	KN-170
		HD-2086	KN-170C
FXRS Low Rider Sport	82 CI	HD-2086	
FXST Softail	82 CI	HD-2086	KN-170
		HD-2086	KN-170C
FXSTC Softail Custom	82 CI	HD-2086	KN-170
		HD-2086	KN-170C
XLH883 Sportster	54 CI	HD-2085	KN-170
		HD-2085	KN-170C
XLH883 Sportster Deluxe	54 CI	HD-2085	KN-170
		HD-2085	KN-170C
XLH883 Sportster Hugger F/I	54 CI	HD-2085	KN-170

*Indicates 2 filters required ♦ - Intake kit available - see page 80 Applications updated daily at knfilters.com

Vehicle	Engine Type	Air Filter	Oil Filter
1987 HARLEY DAVIDSON			
XLH883 Sportster Hugger F/I	54 CI	HD-2085	KN-170C
XLH1000 Sportster	61 CI		KN-170
			KN-170C
XLH1100 Sportster	67 CI	HD-2085	KN-170
		HD-2085	KN-170C
1986 HARLEY DAVIDSON			
FLHTC Electra Glide Classic	82 CI	HD-2086	KN-170
		HD-2086	KN-170C
FLHTC Liberty	82 CI	HD-2086	
FLST Heritage Softail	82 CI	HD-2086	
FLSTC Heritage Softail Classic	82 CI		KN-170
			KN-170C
FLT	82 CI		KN-170
			KN-170C
FLTC Tour Glide Classic	82 CI	HD-2086	KN-170
		HD-2086	KN-170C
FXR Super Glide	82 CI	HD-2086	KN-170
		HD-2086	KN-170C
FXRS Low Rider	82 CI	HD-2086	
FXRS Low Rider Liberty	82 CI	HD-2086	
FXRS Low Rider Sport	82 CI	HD-2086	
FXRT Sport Glide	82 CI	HD-2086	KN-170
		HD-2086	KN-170C
FXST Softail	82 CI	HD-2086	
FXSTC Softail Custom	82 CI	HD-2086	
FXWG Wide Glide	82 CI	HD-2086	KN-172C
XLH883 Sportster	54 CI	HD-2085	KN-170
		HD-2085	KN-170C
XLH883 Sportster Deluxe	54 CI	HD-2085	KN-170
		HD-2085	KN-170C
XLH1000 Sportster	61 CI		KN-170
			KN-170C
XLH1100 Sportster	67 CI	HD-2085	KN-170
		HD-2085	KN-170C
1985 HARLEY DAVIDSON			
FLHT Electra Glide	82 CI		KN-170
			KN-170C
FLHTC Electra Glide Classic	82 CI		KN-170
			KN-170C
FLHTC Electra Glide Classic	82 CI - Non-US	HD-2084	KN-170
FLT	82 CI		KN-170
			KN-170C
FLTC Tour Glide Classic	82 CI	HD-2084	KN-170
		HD-2084	KN-170C
FXEF Super Glide Fat Bob	82 CI	HD-2084	KN-172C
FXR Super Glide	82 CI		KN-170
			KN-170C
FXRS Low Glide	82 CI	HD-2084	
FXRT Sport Glide	82 CI	HD-2084	KN-170

Vehicle	Engine Type	Air Filter	Oil Filter
1985 HARLEY DAVIDSON			
FXRT Sport Glide	82 CI	HD-2084	KN-170C
FXSB Low Rider	82 CI	HD-2084	
FXST Softail	82 CI	HD-2084	KN-170
		HD-2084	KN-170C
FXWG Wide Glide	82 CI	HD-2084	KN-172C
XL1000 Sportster	61 CI - from late 1984		KN-170
			KN-170C
XLH1000 Sportster	61 CI	HD-2076	
XLS1000 Roadster	61 CI - from late 1984		KN-170
			KN-170C
XLX61 Sportster	61 CI - from late 1984		KN-170
			KN-170C
1984 HARLEY DAVIDSON			
FLH Electra Glide Special	82 CI	HD-2084	
FLH80 Electra Glide	82 CI	HD-2084	KN-172C
FLHS	82 CI	HD-2084	KN-172C
FLHT Electra Glide	82 CI - from late 1984		KN-170
			KN-170C
FLHTC Electra Glide Classic	82 CI		KN-170
			KN-170C
FLHTC Electra Glide Classic	82 CI - Non-US	HD-2084	KN-170
FLTC Tour Glide Classic	82 CI	HD-2084	KN-170
		HD-2084	KN-170C
FXE Super Glide	82 CI	HD-2084	KN-172C
FXR Super Glide	82 CI		KN-170
			KN-170C
FXRS Low Glide	82 CI	HD-2084	
FXRT Sport Glide	82 CI	HD-2084	KN-170
		HD-2084	KN-170C
FXST Softail	82 CI	HD-2084	KN-170
		HD-2084	KN-170C
FXWG Wide Glide	82 CI	HD-2084	KN-172C
XL1000 Sportster	61 CI - from late 1984		KN-170
			KN-170C
XLH1000 Sportster	61 CI	HD-2076	
XLH1100 Sportster	67 CI - to early 1984		KN-172C
XLH1200 Sportster	74 CI - to early 1984		KN-172C
XLS1000 Roadster	61 CI - to early 1984		KN-172C
XLX61 Sportster	61 CI - from late 1984		KN-170
			KN-170C
XR1000 Cafe Racer	61 CI - Req's both filters, w/o Vent	RU-1370	
XR1000 Cafe Racer	61 CI - Req's both filters, w/Vent	RU-1371	
1983 HARLEY DAVIDSON			
FLH80 Electra Glide	82 CI	HD-2078	KN-172C
FLHS Super Glide	82 CI	HD-2078	KN-172C
FLT80 Tour Glide	80 CI	HD-2078	KN-170
		HD-2078	KN-170C
FLTC Tour Glide Classic	82 CI	HD-2078	KN-170
		HD-2078	KN-170C
FXE Super Glide	82 CI	HD-2078	KN-172C
FXR Super Glide II	82 CI	HD-2078	KN-170
		HD-2078	KN-170C
FXRS Super Glide II	82 CI	HD-2078	
FXRT Sport Glide	82 CI	HD-2078	KN-170
		HD-2078	KN-170C

*Indicates 2 filters required ♦ - Intake kit available - see page 80 Applications updated daily at knfilters.com

Vehicle	Engine Type	Air Filter	Oil Filter
1983 HARLEY DAVIDSON			
FXSB Low Rider	82 CI	HD-2078	
FXWG Wide Glide	82 CI	HD-2078	KN-172C
XLH883	54 CI		KN-172C
XLH1000 Sportster	61 CI	HD-2076	
XLH1100 Sportster	67 CI		KN-172C
XLH1200 Sportster	74 CI		KN-172C
XLS1000 Roadster	61 CI		KN-172C
XR1000 Cafe Racer	61 CI - Req's both filters, w/o Vent	RU-1370	
XR1000 Cafe Racer	61 CI - Req's both filters, w/Vent	RU-1371	
1982 HARLEY DAVIDSON			
FLH80 Electra Glide	82 CI	HD-2078	KN-172C
FLHS Sport Glide	82 CI	HD-2078	KN-172C
FLT80 Tour Glide	80 CI	HD-2078	KN-170
		HD-2078	KN-170C
FLTC Tour Glide Classic	82 CI	HD-2078	KN-170
		HD-2078	KN-170C
FXE Super Glide	82 CI	HD-2078	KN-172C
FXR Super Glide II	82 CI	HD-2078	KN-170
		HD-2078	KN-170C
FXS Low Rider	82 CI	HD-2078	
XLH883	54 CI		KN-172C
XLH1000 Sportster	61 CI	HD-2078	
XLH1100 Sportster	67 CI		KN-172C
XLH1200 Sportster	74 CI		KN-172C
XLS1000 Roadster	61 CI		KN-172C
1981 HARLEY DAVIDSON			
FLH80 Electra Glide	82 CI	HD-2078	
FLT80 Tour Glide	80 CI	HD-2078	KN-170
		HD-2078	KN-170C
FXE Super Glide	82 CI	HD-2078	
FXS Low Rider	82 CI	HD-2078	
FXWG Wide Glide	82 CI	HD-2078	
XLH883	54 CI		KN-172C
XLH1000 Sportster	61 CI	HD-2078	
XLH1200 Sportster	74 CI		KN-172C
XLS1000 Roadster	61 CI		KN-172C
1980 HARLEY DAVIDSON			
FLH Electra Glide	74 CI	HD-2078	
FLH Electra Glide Classic	82 CI	HD-2078	
FLT	82 CI		KN-170
			KN-170C
FLT80 Tour Glide	82 CI	HD-2078	KN-170
		HD-2078	KN-170C
FLTC Tour Glide Classic	82 CI		KN-170
			KN-170C
FXB Sturgis	82 CI	HD-2078	KN-173C
FXE Super Glide	74 CI	HD-2078	
FXS Low Rider	82 CI	HD-2078	
FXWG Wide Glide	82 CI	HD-2078	
XLH883	54 CI		KN-172C
XLH1000 Sportster	61 CI	HD-2078	
XLH1100 Sportster	67 CI		KN-172C
XLH1200 Sportster	74 CI		KN-172C
XLS1000 Roadster	61 CI		KN-172C
1979 HARLEY DAVIDSON			
FLH Electra Glide	74 CI	HD-2078	
FLH Electra Glide Classic	82 CI	HD-2078	
FLH80 Electra Glide	82 CI	HD-2078	
FX Super Glide	74 CI	HD-2078	
FXE Super Glide	74 CI	HD-2078	
FXEF Fat Bob	74 CI	HD-2078	
FXS Low Rider	82 CI	HD-2078	
XLH1000 Sportster	61 CI	HD-2078	
1978 HARLEY DAVIDSON			
FLH Electra Glide	74 CI	HD-2075	
FX Super Glide	74 CI	HD-2076	
FXE Super Glide	74 CI - Early Models	HD-2076	
FXE Super Glide	74 CI - Late Models	HD-2078	
FXS Low Rider	74 CI	HD-2076	
XLCH1000 Sportster	61 CI	HD-2076	
XLH Sportster Annv.	61 CI	HD-2076	
XLH1000 Sportster	61 CI	HD-2076	
1977 HARLEY DAVIDSON			
FLH Electra Glide	74 CI	HD-2075	
FLH Electra Glide Classic	74 CI	HD-2075	
FX Super Glide	74 CI	HD-2076	
FXE Super Glide	74 CI	HD-2076	
FXS Low Rider	74 CI	HD-2076	
XLCH1000 Sportster	61 CI	HD-2076	
XLH1000 Sportster	61 CI	HD-2076	
1976 HARLEY DAVIDSON			
FLH Electra Glide	74 CI	HD-2075	
FXE Super Glide	74 CI	HD-2076	
FXS Low Rider	74 CI	HD-2076	
XLCH1000 Sportster	61 CI	HD-2076	
XLH1000 Sportster	61 CI	HD-2076	
1975 HARLEY DAVIDSON			
FLH Electra Glide	74 CI	HD-0200	
FX Super Glide	74 CI	HD-0200	
FXE Super Glide	74 CI	HD-0200	
XLCH1000 Sportster	61 CI	HD-2075	
XLH1000 Sportster	61 CI	HD-2075	
1974 HARLEY DAVIDSON			
Aermacchi 350 Sprint	350	HD-2492	
Baja 100	100	HD-0300	
FL 74ci models	74 CI	HD-0200	
FLH 74ci models	74 CI	HD-0200	
FX 74ci models	74 CI	HD-0200	
FX Super Glide	74 CI	HD-0200	
Sportster models	61 CI	HD-0200	
SR100	100	HD-0300	
1973 HARLEY DAVIDSON			
Aermacchi 350 Sprint	350	HD-2492	
Baja 100	100	HD-0300	
FLH 74ci models	74 CI	HD-0200	
FX Super Glide	74 CI	HD-0200	
Sportster models	61 CI	HD-0200	
SR100	100	HD-0300	
1972 HARLEY DAVIDSON			
Aermacchi 350 Sprint	350	HD-2492	
FLH 74ci models	74 CI	HD-0200	
FX Super Glide	74 CI	HD-0200	
Sportster models	61 CI	HD-0200	

HARLEY DAVIDSON AIR & OIL FILTERS

Vehicle	Engine Type	Air Filter	Oil Filter
1971 HARLEY DAVIDSON			
Aermacchi 350 Sprint	350	HD-2492	
Baja 100	100	HD-0300	
FLH 74ci models	74 CI	HD-0200	
FX Super Glide	74 CI	HD-0200	
Sportster models	55 CI	HD-0200	
1970 HARLEY DAVIDSON			
Aermacchi 350 Sprint	350	HD-2492	
Baja 100	100	HD-0300	
FL 74ci models	74 CI	HD-0200	
FLH 74ci models	74 CI	HD-0200	
Sportster models	55 CI	HD-0200	
SR100	100	HD-0300	
1969 HARLEY DAVIDSON			
Aermacchi 350 Sprint	350	HD-2492	
FL 74ci models	74 CI	HD-0200	
Sportster models	55 CI	HD-0200	
1968 HARLEY DAVIDSON			
74FL Electra Glide	74 CI	HD-0200	
FLH 74ci models	74 CI	HD-0200	
1967 HARLEY DAVIDSON			
74FL Electra Glide	74 CI	HD-0200	
FLH 74ci models	74 CI	HD-0200	
FX 74ci models	74 CI	HD-0200	
Sportster models	55 CI	HD-0200	
1956 HARLEY DAVIDSON			
74ci V-Twin	74 CI - OHV	E-2470	
1955 HARLEY DAVIDSON			
45ci V-Twin	45 CI - Flat Head	E-2470	
74ci V-Twin	74 CI - OHV	E-2470	
1953 HARLEY DAVIDSON			
45ci V-Twin	45 CI - Flat Head	E-2470	
1952 HARLEY DAVIDSON			
45ci V-Twin	45 CI - Flat Head	E-2470	
1951 HARLEY DAVIDSON			
45ci V-Twin	45 CI - Flat Head	E-2470	
1950 HARLEY DAVIDSON			
45ci V-Twin	45 CI - Flat Head	E-2470	
1949 HARLEY DAVIDSON			
45ci V-Twin	45 CI - Flat Head	E-2470	
1948 HARLEY DAVIDSON			
45ci V-Twin	45 CI - Flat Head	E-2470	
1947 HARLEY DAVIDSON			
45ci V-Twin	45 CI - Flat Head	E-2470	
1946 HARLEY DAVIDSON			
45ci V-Twin	45 CI - Flat Head	E-2470	
1943 HARLEY DAVIDSON			
45ci V-Twin	45 CI - Flat Head	E-2470	
1942 HARLEY DAVIDSON			
45ci V-Twin	45 CI - Flat Head	E-2470	
1941 HARLEY DAVIDSON			
45ci V-Twin	45 CI - Flat Head	E-2470	
2006 HOLDEN			
Commodore	6.0L V8 F/I	33-2919	
2004 HOLDEN			
Adventra	5.7L V8 F/I	33-2116	HP-1007
Commodore	3.8L V6 F/I - inc. VT, VX, VY	33-2116	
Commodore	5.0L V8 F/I	33-2116	
Commodore	5.7L V8 F/I	33-2116	
Monaro	5.7L V8 F/I	33-2116	
2003 HOLDEN			
Adventra	5.7L V8 F/I - from 9/03	33-2116	
Commodore	3.8L V6 F/I - inc. VT	33-2116	
Commodore	5.7L V8 F/I	33-2116	
Monaro	5.7L V8 F/I	33-2116	
2002 HOLDEN			
Calais	3.8L V6 F/I - Supercharged	33-2116	
Commodore	3.8L V6 F/I - inc. VT	33-2116	
Commodore	5.0L V8 F/I	33-2116	
Commodore	5.7L V8 F/I	33-2116	
Monaro	5.7L V8 F/I	33-2116	
2001 HOLDEN			
Commodore	3.8L V6 F/I - inc. VT	33-2116	
Commodore	5.7L V8 F/I - Non-US	33-2235	
Monaro	5.7L V8 F/I	33-2116	
2000 HOLDEN			
Monaro	5.7L V8 F/I	33-2116	
1999 HOLDEN			
Commodore	3.8L V6 F/I - inc. VT	33-2116	
Commodore	5.7L V8 F/I	33-2116	
1998 HOLDEN			
Commodore	3.8L V6 F/I - inc. VT	33-2116	
1997 HOLDEN			
Commodore	3.8L V6 F/I - inc. VT	33-2116	
Commodore	5.0L V8 F/I	33-2116	
Commodore	5.7L V8 F/I	33-2116	
2013 HONDA			
Accord	2.4L L4 F/I		HP-1010
Accord	3.5L V6 F/I		HP-1010
Accord IX	2.0L L4 F/I	33-3003	
CBR250R	249	HA-2511	KN-112
Civic	1.8L L4 F/I	33-2468	HP-1010
Civic IX	1.8L L4 F/I	33-2468	
Civic Si	2.4L L4 F/I	33-2473	HP-1010
CRF100F	100	HA-1088	
CRF150R	150	HA-1507	
CRF150R Expert	150	HA-1507	
CRF230F	230	HA-1503	
CRF250R	250	HA-4509XD	KN-116
CRF250X	249	HA-2505XD	KN-116
CRF450X	449	HA-2505XD	KN-116
CR-V	2.4L L4 F/I	33-2477	HP-1010
CR-Z	1.5L L4 F/I		HP-1010
Fit	1.5L L4 F/I	33-2422 ♦	HP-1010
Insight	1.3L L4 F/I	33-2433	HP-1010
Odyssey	3.5L V6 F/I	33-2461	HP-1010
Pilot	3.5L V6 F/I	33-2309	HP-1010
Ridgeline	3.5L V6 F/I	33-2323	HP-1010
TRX420 Rancher A/T	420	HA-4207	
TRX420 Rancher M/T	420	HA-4207	KN-113
TRX450ER	450	BD-6500	
TRX500FA Foreman Rubicon	499	HA-6806	
TRX680FA Rincon	680	HA-6806	KN-111

*Indicates 2 filters required ♦ - Intake kit available - see page 80 Applications updated daily at knfilters.com

Partial Listing - Complete List of Vehicles and Applications at knfilters.com

Vehicle	Engine Type	Air Filter	Oil Filter
2012 HONDA			
Accord	2.0L L4 F/I	33-3003	
Accord	2.4L L4 F/I	33-2402 ♦	HP-1010
Accord	3.5L V6 F/I	33-2403 ♦	HP-1010
Accord IX	2.0L L4 F/I	33-3003	
Accord IX	2.4L L4 F/I	33-2430	
CB600F Hornet	599	HA-5907	KN-204
		HA-5907	KN-204C
CB1000R	998	HA-1009	KN-204
		HA-1009	KN-204C
CB1300	1300	HA-1301	KN-204
		HA-1301	KN-204C
CB1300S	1300	HA-1301	KN-204
		HA-1301	KN-204C
CBF600	599	HA-5907	KN-204
		HA-5907	KN-204C
CBF600S	599	HA-5907	KN-204
		HA-5907	KN-204C
CBF1000 F	1000	HA-1009	KN-204
		HA-1009	KN-204C
CBR250R	249	HA-2511	KN-112
CBR600F	599	HA-5907	KN-204
		HA-5907	KN-204C
CBR600RR	599	HA-6007	KN-204
		HA-6007	KN-204C
CBR600RR	599 - Race Specific	HA-6007R	KN-204
CBR1000RR	999	HA-1008	
CBR1000RR	999 - Race Specific	HA-1008R	
Civic	1.5L L4 F/I	33-2348	HP-1010
Civic	1.8L L4 F/I	33-2468	HP-1010
Civic IX	1.8L L4 F/I	33-2468	HP-1010
Civic Si	2.4L L4 F/I	33-2473 ♦	HP-1010
CRF80F	80	HA-1088	
CRF100F	100	HA-1088	
CRF150F	150	HA-1503	
CRF150R	150	HA-1507	
CRF150R Expert	150	HA-1507	
CRF230F	230	HA-1503	
CRF250R	250	HA-4509XD	KN-116
CRF250X	249	HA-2505XD	KN-116
CRF450R	444	HA-4509XD	KN-116
CRF450X	449	HA-2505XD	KN-116
Crosstour	2.4L L4 F/I	33-2402	HP-1010
Crosstour	3.5L V6 F/I	33-2403 ♦	HP-1010
CR-V	2.4L L4 F/I		HP-1010
CR-V	2.4L L4 F/I - US	33-2477	HP-1010
CR-V III	2.0L L4 F/I	33-2961	
CR-V III	2.4L L4 F/I - Non-US	33-2437	
CR-Z	1.5L L4 F/I	33-2459 ♦	HP-1010
Fit	1.5L L4 F/I	33-2422 ♦	HP-1010
FJS600 Silver Wing	600	HA-6002	KN-204
		HA-6002	KN-204C
FSC600 Silver Wing	582	HA-6002	KN-204
		HA-6002	KN-204C
GL1800 Gold Wing	1832	HA-1801	KN-204
		HA-1801	KN-204C
Insight	1.3L L4 F/I	33-2433	HP-1010
Jazz	1.2L L4 F/I	33-2422	
Jazz	1.3L L4 F/I	33-2433	
Jazz	1.4L L4 F/I	33-2422	
NPS50 Ruckus	50	HA-0502	
NT700V Deauville	700		KN-204
			KN-204C
NT700VA	700		KN-204
			KN-204C
2012 HONDA			
NT700VAA	700		KN-204
			KN-204C
Odyssey	3.5L V6 F/I	33-2461	HP-1010
PCX 125	125	HA-1211	
Pilot	3.5L V6 F/I	33-2309	HP-1010
PS150i	150	HA-1510	
Ridgeline	3.5L V6 F/I	33-2323	HP-1010
SH150i	150	HA-1510	
SH300i	300	HA-3011	KN-204
		HA-3011	KN-204C
ST1300	1261	HA-1302	KN-204
		HA-1302	KN-204C
TRX90X	90	HA-1088	
TRX250TE Recon ES	250	HA-2501	
TRX250TM Recon	250	HA-2501	
TRX400X	397	HA-4099	KN-113
TRX420 Rancher A/T	420	HA-4207	
TRX420 Rancher M/T	420	HA-4207	KN-113
TRX450ER	450	BD-6500	
TRX500FA Foreman Rubicon	499	HA-6806	
TRX500FE Foreman 4x4 ES	500		KN-113
TRX500FM Foreman 4x4	475	HA-5000	KN-113
TRX500FPA Foreman Rubicon GPScape w/EPS	500		KN-111
TRX500FPE Foreman 4x4 ES w/PS	500		KN-113
TRX500FPM Foreman 4x4 w/PS	500		KN-113
TRX680FA Rincon	680	HA-6806	KN-111
VFR1200 Crosstourer	1235	HA-1110	KN-204
		HA-1110	KN-204C
VT750 C2 Shadow	750		KN-204
			KN-204C
VT750 C2B Shadow Phantom	745	HA-7504	KN-204
		HA-7504	KN-204C
VT750 RS Shadow	745	HA-7504	KN-204
		HA-7504	KN-204C
VT750C Shadow	750		KN-204
			KN-204C
VT750C Shadow Aero	745	HA-7504	KN-204
		HA-7504	KN-204C
VT1300CR Stateline	1312	HA-1310	KN-204
		HA-1310	KN-204C
VT1300CS Sabre	1312	HA-1310	KN-204
		HA-1310	KN-204C
VT1300CT Interstate	1312	HA-1310	KN-204
		HA-1310	KN-204C
VT1300CX Fury	1312	HA-1310	KN-204
		HA-1310	KN-204C
XR650L	650	HA-6592	KN-112
2011 HONDA			
Accord	2.0L L4 F/I	33-3003	
Accord	2.4L L4 F/I	33-2402 ♦	HP-1010
Accord	3.5L V6 F/I	33-2403 ♦	HP-1010
Accord Crosstour	3.5L V6 F/I	33-2403 ♦	HP-1010
Accord IX	2.0L L4 F/I	33-3003	
Accord IX	2.4L L4 F/I	33-2430	

*Indicates 2 filters required ♦ - Intake kit available - see page 80 Applications updated daily at knfilters.com

Vehicle	Engine Type	Air Filter	Oil Filter
2011 HONDA			
CB600F Hornet	599	HA-5907	KN-204
		HA-5907	KN-204C
CB1000R	998	HA-1009	KN-204
		HA-1009	KN-204C
CB1300	1300	HA-1301	KN-204
		HA-1301	KN-204C
CB1300S	1300	HA-1301	KN-204
		HA-1301	KN-204C
CBF600	599	HA-5907	KN-204
		HA-5907	KN-204C
CBF600S	599	HA-5907	KN-204
		HA-5907	KN-204C
CBF1000 F	1000	HA-1009	KN-204
		HA-1009	KN-204C
CBR125R	125	HA-1502	
CBR250R	249	HA-2511	KN-112
CBR600F	599	HA-5907	KN-204
		HA-5907	KN-204C
CBR600RR	599	HA-6007	KN-204
		HA-6007	KN-204C
CBR600RR	599 - Race Specific	HA-6007R	KN-204
CBR1000RR	999	HA-1008	KN-204
		HA-1008	KN-204C
CBR1000RR	999 - Race Specific	HA-1008R	KN-204
Civic	1.3L L4 F/I	33-2348	HP-1010
Civic	1.8L L4 F/I	33-2342 ♦	HP-1010
Civic GX	1.8L L4 F/I	33-2342	HP-1010
Civic Si	2.0L L4 F/I	33-2343 ♦	HP-1010
Civic VII	1.3L L4 F/I	33-2348	HP-1010
Civic VII	1.8L L4 F/I	33-2342 ♦	HP-1010
CRF80F	80	HA-1088	
CRF100F	100	HA-1088	
CRF250R	250	HA-4509XD	KN-116
CRF450R	444	HA-4509XD	KN-116
CR-V	2.4L L4 F/I	33-2437	HP-1010
CR-V III	2.0L L4 F/I	33-2961	
CR-Z	1.5L L4 F/I	33-2459 ♦	HP-1010
Element	2.4L L4 F/I	33-2343	HP-1010
Fit	1.5L L4 F/I	33-2422 ♦	HP-1010
FJS600 Silver Wing	600	HA-6002	KN-204
		HA-6002	KN-204C
Insight	1.3L L4 F/I	33-2433	HP-1010
Jazz	1.2L L4 F/I	33-2422	
Jazz	1.4L L4 F/I	33-2422	
NPS50 Ruckus	50	HA-0502	
NT700V Deauville	700		KN-204
			KN-204C
NT700VA	700		KN-204
			KN-204C
NT700VAA	700		KN-204
			KN-204C
Odyssey	3.5L V6 F/I	33-2461	HP-1010
PCX 125	125	HA-1211	
Pilot	3.5L V6 F/I	33-2309	HP-1010
PS150i	150	HA-1510	
Ridgeline	3.5L V6 F/I	33-2323	HP-1010
SH150i	150	HA-1510	
SH300i	300	HA-3011	KN-204
		HA-3011	KN-204C
TRX250TE Recon ES	250	HA-2501	
TRX250TM Recon	250	HA-2501	
TRX250X	250	HA-2501	
TRX420 Rancher A/T	420	HA-4207	
TRX420 Rancher M/T	420	HA-4207	KN-113

Vehicle	Engine Type	Air Filter	Oil Filter
2011 HONDA			
TRX500FA Foreman Rubicon	500	HA-5000	KN-111
TRX500FE Foreman 4x4 ES	500	HA-5000	KN-113
TRX500FM Foreman 4x4	500	HA-5000	KN-113
TRX500FPA Foreman Rubicon GPScape w/EPS	500	HA-5000	KN-111
TRX500FPE Foreman 4x4 ES w/PS	500	HA-5000	KN-113
TRX500FPM Foreman 4x4 w/PS	500	HA-5000	KN-113
TRX680FA Rincon	680	HA-6806	KN-111
VFR1200	1237	HA-1110	KN-204
		HA-1110	KN-204C
VT750 C2 Shadow	750		KN-204
			KN-204C
VT750 C2B Shadow Phantom	750	HA-7504	KN-204
		HA-7504	KN-204C
VT750 RS Shadow	750	HA-7504	KN-204
		HA-7504	KN-204C
VT750C Shadow	750	HA-7504	KN-204
		HA-7504	KN-204C
VT1300CR Stateline	1312	HA-1310	KN-204
		HA-1310	KN-204C
2010 HONDA			
Accord	2.0L L4 F/I	33-3003	
Accord	2.4L L4 F/I		HP-1010
Accord	2.4L L4 F/I - US	33-2402 ♦	HP-1010
Accord	3.5L V6 F/I	33-2403 ♦	HP-1010
Accord Crosstour	3.5L V6 F/I	33-2403 ♦	HP-1010
Accord IX	2.0L L4 F/I	33-3003	
Accord IX	2.4L L4 F/I	33-2430	
CB600 Hornet	600		KN-204
			KN-204C
CB600F Hornet	599	HA-5907	KN-204
		HA-5907	KN-204C
CB1000R	998	HA-1009	KN-204
		HA-1009	KN-204C
CB1300	1300	HA-1301	KN-204
		HA-1301	KN-204C
CB1300S	1300	HA-1301	KN-204
		HA-1301	KN-204C
CB1300SA	1300		KN-204
			KN-204C
CBF600	599	HA-5907	KN-204
		HA-5907	KN-204C
CBF600S	599	HA-5907	KN-204
		HA-5907	KN-204C
CBF1000	1000	HA-1006	KN-204
		HA-1006	KN-204C
CBF1000 F	1000	HA-1009	KN-204
		HA-1009	KN-204C
CBF1000 F Travel	1000		KN-204
			KN-204C
CBR125R	125	HA-1502	
CBR600RR	600	HA-6007	KN-204
		HA-6007	KN-204C
CBR600RR	600 - Race Specific	HA-6007R	KN-204
CBR1000RR	999	HA-1008	KN-204
		HA-1008	KN-204C

*Indicates 2 filters required ♦ - Intake kit available - see page 80 Applications updated daily at knfilters.com

Vehicle	Engine Type	Air Filter	Oil Filter
2010 HONDA			
CBR1000RR	999 - Race Specific	HA-1008R	KN-204
City	1.5L L4 F/I		HP-1010
Civic	1.3L L4 F/I	33-2348	HP-1010
Civic	1.8L L4 F/I	33-2342 ♦	HP-1010
Civic GX	1.8L L4 F/I	33-2342	HP-1010
Civic Si	2.0L L4 F/I	33-2343 ♦	HP-1010
Civic VII	1.3L L4 F/I	33-2348	HP-1010
Civic VII	1.8L L4 F/I	33-2342 ♦	HP-1010
Civic VIII	2.0L L4 F/I	33-2948	
CRF150R	150		KN-116
CRF250R	250	HA-4509XD	KN-116
CRF450R	444	HA-4509XD	KN-116
CR-V	2.4L L4 F/I	33-2437	HP-1010
CR-V III	2.0L L4 F/I	33-2961	
CR-V III	2.2L L4 DSL - 140BHP	33-2982	
Element	2.4L L4 F/I	33-2343	HP-1010
Fit	1.5L L4 F/I	33-2422 ♦	HP-1010
FJS600 Silver Wing	600	HA-6002	KN-204
		HA-6002	KN-204C
FR-V	1.8L L4 F/I	33-2342	
FSC600 Silver Wing	582	HA-6002	KN-204
		HA-6002	KN-204C
GL1800 Gold Wing	1832	HA-1801	KN-204
		HA-1801	KN-204C
Insight	1.3L L4 F/I	33-2433	HP-1010
NHX110	110	HA-1010	
NSA700 DN-01	700	HA-6708	
NT700V Deauville	700	HA-7010	KN-204
		HA-7010	KN-204C
NT700VA	700		KN-204
			KN-204C
NT700VAA	700		KN-204
			KN-204C
Odyssey	3.5L V6 F/I	33-2309	HP-1010
PCX 125	125	HA-1211	
PES125	125	HA-1510	
PES150	150	HA-1510	
Pilot	3.5L V6 F/I	33-2309	HP-1010
Ridgeline	3.5L V6 F/I	33-2323	HP-1010
SH125	125	HA-1510	
SH300i	300	HA-3011	KN-204
		HA-3011	KN-204C
ST1300	1300	HA-1302	KN-204
		HA-1302	KN-204C
TRX420 Rancher A/T	420	HA-4207	
TRX420 Rancher M/T	420	HA-4207	KN-113
TRX680FA Rincon	680	HA-6806	KN-111
VFR1200	1237	HA-1110	KN-204
		HA-1110	KN-204C
VT750 C2B Shadow Phantom	750		KN-204
			KN-204C
VT750 RS Shadow	750		KN-204
			KN-204C
VT750C Shadow	750	HA-7504	KN-204
		HA-7504	KN-204C
VT1300CR Stateline	1312	HA-1310	KN-204
		HA-1310	KN-204C
VT1300CX Fury	1312	HA-1310	KN-204
		HA-1310	KN-204C
XL700V Transalp	700	HA-7008	KN-204
		HA-7008	KN-204C
XL1000 Varadero	1000	HA-1003	KN-204

Vehicle	Engine Type	Air Filter	Oil Filter
2010 HONDA			
XL1000 Varadero	1000	HA-1003	KN-204C
2009 HONDA			
Accord	2.0L L4 F/I	33-3003	
Accord	2.4L L4 F/I		HP-1010
Accord	2.4L L4 F/I - US	33-2402 ♦	HP-1010
Accord	3.5L V6 F/I	33-2403 ♦	HP-1010
Accord IX	2.0L L4 F/I	33-3003	
Accord IX	2.4L L4 F/I	33-2430	
ARX1500N3 Aquatrax F-15	1470		KN-204
			KN-204C
ARX1500T3 Aquatrax F-15X	1470		KN-204
			KN-204C
CB600F Hornet	599	HA-5907	KN-204
		HA-5907	KN-204C
CB1000R	998	HA-1009	KN-204
		HA-1009	KN-204C
CB1300	1300	HA-1301	
CB1300S	1300	HA-1301	KN-204
		HA-1301	KN-204C
CB1300SA	1300		KN-204
			KN-204C
CBF600	599	HA-5907	KN-204
		HA-5907	KN-204C
CBF600S	599	HA-5907	KN-204
		HA-5907	KN-204C
CBF1000	990	HA-1006	KN-204
		HA-1006	KN-204C
CBF1000 F	1000		KN-204
			KN-204C
CBF1000 F Ltd. Ed.	1000		KN-204
			KN-204C
CBF1000 F Travel	1000		KN-204
			KN-204C
CBR125R	125	HA-1502	
CBR600 RA	600		KN-204
			KN-204C
CBR600RR	600	HA-6007	KN-204
		HA-6007	KN-204C
CBR600RR	600 - Race Specific	HA-6007R	KN-204
CBR1000RR	999	HA-1008	KN-204
		HA-1008	KN-204C
CBR1000RR	999 - Race Specific	HA-1008R	KN-204
CHF50 Metropolitan	50	HA-0502	
Civic	1.3L L4 F/I	33-2348	HP-1010
Civic	1.8L L4 F/I	33-2342 ♦	HP-1010
Civic Si	2.0L L4 F/I	33-2343 ♦	HP-1010
Civic VII	1.3L L4 F/I	33-2348	HP-1010
Civic VII	1.8L L4 F/I	33-2342 ♦	HP-1010
Civic VIII	2.0L L4 F/I	33-2948 ♦	
CRF80F	80	HA-1088	
CRF100F	100	HA-1088	
CRF150F	150	HA-1503	
CRF150R	150	HA-1507	KN-116
CRF150R Expert	150	HA-1507	KN-116
CRF230F	230	HA-1503	
CRF250R	250	HA-4503XD	KN-116
CRF250X	250	HA-2505XD	KN-116
CRF450R	444	HA-4509XD	KN-116
CRF450X	444	HA-2505XD	KN-116
CR-V	2.4L L4 F/I	33-2377	HP-1010

*Indicates 2 filters required ♦ - Intake kit available - see page 80 Applications updated daily at knfilters.com

Vehicle	Engine Type	Air Filter	Oil Filter
2009 HONDA			
CR-V III	2.0L L4 F/I	33-2961	
CR-V III	2.2L L4 DSL	33-2982	
Element	2.4L L4 F/I	33-2343	HP-1010
Fit	1.5L L4 F/I	33-2422 ♦	HP-1010
FR-V	1.8L L4 F/I	33-2342	
FSC600 Silver Wing	582	HA-6002	KN-204
		HA-6002	KN-204C
GL1800 Gold Wing	1800	HA-1801	KN-204
		HA-1801	KN-204C
Insight	1.3L L4 F/I	33-2433	
Jazz	1.5L L4 F/I	33-2422	
NPS50 Ruckus	50	HA-0502	
NSA700 DN-01	700	HA-6708	KN-204
		HA-6708	KN-204C
Odyssey	3.5L V6 F/I	33-2309	HP-1010
Pilot	3.5L V6 F/I	33-2309	HP-1010
Ridgeline	3.5L V6 F/I	33-2323	HP-1010
S2000	2.2L L4 F/I	E-2435	HP-1004
SH150i	150	HA-1510	
SH300i	300	HA-3011	KN-204
		HA-3011	KN-204C
ST1300	1300	HA-1302	KN-204
		HA-1302	KN-204C
ST1300 Pan European	1300		KN-204
			KN-204C
TRX90X	90	HA-1088	
TRX250TE Recon ES	250	HA-2501	
TRX250TM Recon	250	HA-2501	
TRX250X	250	HA-2501	
TRX300X	300	HA-3094	KN-113
TRX400X	400	HA-4099	KN-113
TRX420 Rancher A/T	420	HA-4207	
TRX420 Rancher M/T	420	HA-4207	KN-113
TRX450ER	450	BD-6500	KN-116
TRX450R	450	BD-6500	KN-116
TRX500FA Foreman Rubicon	500	HA-5000	KN-111
TRX500FE Foreman 4x4 ES	500	HA-5000	KN-113
TRX500FM Foreman 4x4	500	HA-5000	KN-113
TRX500FPA Foreman Rubicon GPScape w/EPS	500	HA-5000	KN-111
TRX500FPE Foreman 4x4 ES w/PS	500	HA-5000	KN-113
TRX500FPM Foreman 4x4 w/PS	500	HA-5000	KN-113
TRX680FA Rincon	680	HA-6806	KN-111
TRX680FGA Rincon GPScape	680	HA-6806	KN-111
TRX700XX	700	HA-6808	KN-112
VFR800F Interceptor	782	HA-8098	KN-204
		HA-8098	KN-204C
VT750C Shadow Aero	750	HA-7504	KN-204
		HA-7504	KN-204C
VT750C2 Shadow Spirit	750	HA-7504	KN-204
		HA-7504	KN-204C
VTX1300C	1300	HA-1330	KN-204
		HA-1330	KN-204C
2009 HONDA			
VTX1300R	1300	HA-1330	KN-204
		HA-1330	KN-204C
VTX1300T	1300	HA-1330	KN-204
		HA-1330	KN-204C
XL700V Transalp	700	HA-7008	KN-204
		HA-7008	KN-204C
XR650L	650	HA-6592	KN-112
2008 HONDA			
Accord	2.4L L4 F/I		HP-1010
Accord	2.4L L4 F/I - US	33-2402 ♦	HP-1010
Accord	3.5L V6 F/I	33-2403 ♦	HP-1010
Accord IX	2.0L L4 F/I	33-3003	
Accord IX	2.4L L4 F/I	33-2430	
Accord VIII	2.0L L4 F/I - Non-US	33-2276 ♦	
Accord VIII	2.4L L4 F/I - Non-US	33-2276 ♦	HP-1010
ARX1500T3 Aquatrax F-15X	1470		KN-204
			KN-204C
CB600F Hornet	599	HA-5907	KN-204
		HA-5907	KN-204C
CB1000R	998		KN-204
			KN-204C
CB1300F	1300		KN-204
			KN-204C
CB1300S	1300	HA-1301	KN-204
		HA-1301	KN-204C
CBF600	599	HA-5907	KN-204
		HA-5907	KN-204C
CBF600S	599	HA-5907	KN-204
		HA-5907	KN-204C
CBF1000	990	HA-1006	KN-204
		HA-1006	KN-204C
CBF1000 F	1000		KN-204
			KN-204C
CBF1000 F Travel	1000		KN-204
			KN-204C
CBR125R	125	HA-1502	
CBR600RR	600	HA-6007	KN-204
		HA-6007	KN-204C
CBR600RR	600 - Race Specific	HA-6007R	KN-204
CBR1000RR	999	HA-1008	KN-204
		HA-1008	KN-204C
CBR1000RR	999 - Race Specific	HA-1008R	KN-204
CHF50 Metropolitan	50	HA-0502	
Civic	1.3L L4 F/I	33-2348	HP-1010
Civic	1.8L L4 F/I	33-2342 ♦	HP-1010
Civic Si	2.0L L4 F/I	33-2343 ♦	HP-1010
Civic VII	1.3L L4 F/I	33-2348	HP-1010
Civic VII	1.8L L4 F/I	33-2342 ♦	HP-1010
Civic VIII	2.0L L4 F/I	33-2948 ♦	
CRF80F	80	HA-1088	
CRF100F	100	HA-1088	
CRF150F	150	HA-1503	
CRF150R	150	HA-1507	KN-116
CRF150R Expert	150	HA-1507	KN-116
CRF230F	230	HA-1503	
CRF250R	250	HA-4503XD	KN-116
CRF250X	250	HA-2505XD	KN-116
CRF450R	444	HA-4503XD	KN-116
CRF450X	444	HA-2505XD	KN-116
CR-V	2.4L L4 F/I	33-2377	HP-1010
CR-V III	2.0L L4 F/I	33-2961	
CR-V III	2.2L L4 DSL	33-2982	

*Indicates 2 filters required ♦ - Intake kit available - see page 80 Applications updated daily at knfilters.com

Vehicle	Engine Type	Air Filter	Oil Filter
2008 HONDA			
Element	2.4L L4 F/I	33-2343	HP-1010
Fit	1.5L L4 F/I	33-2359 ♦	HP-1010
FSC600 Silver Wing	582	HA-6002	KN-204
		HA-6002	KN-204C
GL1800 Gold Wing	1800	HA-1801	KN-204
		HA-1801	KN-204C
Jazz	1.2L L4 F/I - OEM 17220REAZ00	33-2872	
Jazz	1.4L L4 F/I - OEM 17201PWA010	33-2917 ♦	
Jazz	1.4L L4 F/I - OEM 17220PWAJ10	33-2359 ♦	
Jazz	1.4L L4 F/I - OEM 17220REAZ00	33-2872 ♦	
NPS50 Ruckus	50	HA-0502	
NSS250 Forza	250		KN-204
			KN-204C
NT700V Deauville	700	HA-7010	KN-204
		HA-7010	KN-204C
Odyssey	3.5L V6 F/I	33-2309	HP-1010
PES125	125	HA-1510	
PES150	150	HA-1510	
Pilot	3.5L V6 F/I	33-2200	HP-1010
Ridgeline	3.5L V6 F/I	33-2323 ♦	HP-1010
S2000	2.2L L4 F/I	E-2435 ♦	HP-1004
SH125	125	HA-1510	
SH150i	150	HA-1510	
ST1300	1300	HA-1302	KN-204
		HA-1302	KN-204C
ST1300 Pan European	1300		KN-204
			KN-204C
TRX90EX	90	HA-1088	
TRX250EX	225	HA-2501	
TRX250TE Recon ES	250	HA-2501	
TRX250TM Recon	250	HA-2501	
TRX300EX	300	HA-3094	KN-113
TRX400EX	397	HA-4099	KN-113
TRX420 Rancher A/T	420	HA-4207	
TRX420 Rancher M/T	420	HA-4207	KN-113
TRX450ER	450	BD-6500	KN-116
TRX450R	450	BD-6500	KN-116
TRX500FA Foreman Rubicon	500	HA-5000	KN-111
TRX500FE Foreman 4x4 ES	500	HA-5000	KN-113
TRX500FGA Foreman Rubicon GPScape	500	HA-5000	KN-111
TRX500FM Foreman 4x4	500	HA-5000	KN-113
TRX500FPE Foreman 4x4 ES w/PS	500	HA-5000	KN-113
TRX500FPM Foreman 4x4 w/PS	500	HA-5000	KN-113
TRX680FA Rincon	680	HA-6806	KN-111
TRX680FGA Rincon GPScape	680	HA-6806	KN-111
TRX700XX	700	HA-6808	KN-112
VFR800F Interceptor	782	HA-8098	KN-204
		HA-8098	KN-204C
VT750C Shadow	750		KN-204
			KN-204C
VT750C Shadow Aero	750	HA-7504	KN-204
VT750C Shadow Aero	750	HA-7504	KN-204C
VT750C2 Shadow Spirit	750	HA-7504	KN-204
		HA-7504	KN-204C
VTX1300C	1300	HA-1330	KN-204
		HA-1330	KN-204C
VTX1300R	1300	HA-1330	KN-204
		HA-1330	KN-204C
VTX1300T	1300	HA-1330	KN-204
		HA-1330	KN-204C
VTX1800F	1795	HA-1802	KN-204
		HA-1802	KN-204C
VTX1800N	1795	HA-1802	KN-204
		HA-1802	KN-204C
VTX1800T	1795	HA-1802	KN-204
		HA-1802	KN-204C
XL700V Transalp	700	HA-7008	KN-204
		HA-7008	KN-204C
XL1000 Varadero	1000	HA-1003	KN-204
		HA-1003	KN-204C
XR650L	650	HA-6592	KN-112
2007 HONDA			
919	919	HA-9002	KN-204
		HA-9002	KN-204C
Accord	2.4L L4 F/I	33-2276 ♦	HP-1010
Accord	3.0L V6 F/I	33-2277 ♦	HP-1010
Accord Hybrid	3.0L V6 F/I	33-2299	HP-1010
Accord VIII	2.0L L4 F/I - Non-US	33-2276 ♦	
Accord VIII	2.4L L4 F/I - Non-US	33-2276 ♦	HP-1010
ARX1200N3 Aquatrax F-12	1235		KN-204
			KN-204C
ARX1200T2 Aquatrax R-12X	1235		KN-204
			KN-204C
ARX1200T3 Aquatrax F-12X	1235		KN-204
			KN-204C
ARX1200T3D Aquatrax F-12X GPScape	1235		KN-204
			KN-204C
CB600F Hornet	599	HA-5907	KN-204
		HA-5907	KN-204C
CB900F Hornet	919	HA-9002	KN-204
		HA-9002	KN-204C
CB1300	1300	HA-1301	KN-204
		HA-1301	KN-204C
CB1300F	1300		KN-204
			KN-204C
CB1300S	1300	HA-1301	KN-204
		HA-1301	KN-204C
CBF600	599	HA-5907	KN-204
		HA-5907	KN-204C
CBF600S	599	HA-5907	KN-204
		HA-5907	KN-204C
CBF1000 F	1000		KN-204
			KN-204C
CBF1000 F Travel	1000		KN-204

*Indicates 2 filters required ♦ - Intake kit available - see page 80 Applications updated daily at knfilters.com

2007 HONDA

Vehicle	Engine Type	Air Filter	Oil Filter
CBF1000 F Travel	1000		KN-204C
CBR125R	125	HA-1502	
CBR600F	600		KN-204
			KN-204C
CBR600RR	600	HA-6007	KN-204
		HA-6007	KN-204C
CBR600RR	600 - Race Specific	HA-6007R	KN-204
CBR1000RR	999	HA-1004	KN-204
		HA-1004	KN-204C
CBR1000RR	999 - Race Specific	HA-1004R	KN-204
CHF50 Metropolitan	50	HA-0502	
Civic	1.3L L4 F/I	33-2348	HP-1010
Civic	1.8L L4 F/I	33-2342 ♦	HP-1010
Civic Si	2.0L L4 F/I	33-2343 ♦	HP-1010
Civic VII	1.3L L4 F/I	33-2348	HP-1010
Civic VII	1.8L L4 F/I	33-2342 ♦	HP-1010
Civic VIII	2.0L L4 F/I	33-2948 ♦	
CN250 Helix	250	HA-2586	
CR85R	86	HA-8086	
CR85R Expert	86	HA-8086	
CRF80F	80	HA-1088	
CRF100F	100	HA-1088	
CRF150F	150	HA-1503	
CRF150R	150	HA-1507	KN-116
CRF150R Expert	150	HA-1507	KN-116
CRF230F	230	HA-1503	
CRF250R	250	HA-4503XD	KN-116
CRF250X	250	HA-2505XD	KN-116
CRF450R	444	HA-4503XD	KN-116
CRF450X	444	HA-2505XD	KN-116
CR-V	2.4L L4 F/I	33-2377	HP-1010
CR-V II	2.2L L4 DSL	33-2982	
CR-V III	2.0L L4 F/I	33-2961	
CR-V III	2.2L L4 DSL	33-2982	
Element	2.4L L4 F/I	33-2343	HP-1010
Fit	1.5L L4 F/I	33-2359 ♦	HP-1010
FSC600 Silver Wing	582	HA-6002	KN-204
		HA-6002	KN-204C
GL1800 Gold Wing	1800	HA-1801	KN-204
		HA-1801	KN-204C
Jazz	1.2L L4 F/I - OEM 17201PWA010	33-2917	
Jazz	1.2L L4 F/I - OEM 17220REAZ00	33-2872	
Jazz	1.4L L4 F/I - OEM 17201PWA010	33-2917 ♦	
Jazz	1.4L L4 F/I - OEM 17220PWAJ10	33-2359 ♦	
Jazz	1.4L L4 F/I - OEM 17220REAZ00	33-2872 ♦	
NPS50 Ruckus	50	HA-0502	
Odyssey	3.5L V6 F/I	33-2309	HP-1010
Pilot	3.5L V6 F/I	33-2200	HP-1010
Ridgeline	3.5L V6 F/I	33-2323 ♦	HP-1010
S2000	2.0L L4 F/I	E-2435 ♦	HP-1004
S2000	2.2L L4 F/I	E-2435 ♦	HP-1004
SH150i	150	HA-1510	
SH300i	300	HA-3011	KN-204
		HA-3011	KN-204C
ST1300	1300	HA-1302	KN-204
		HA-1302	KN-204C
ST1300 Pan European	1300	HA-1302	KN-204
		HA-1302	KN-204C
TRX90EX	90	HA-1088	

2007 HONDA

Vehicle	Engine Type	Air Filter	Oil Filter
TRX250EX	225	HA-2501	
TRX250TE Recon ES	250	HA-2501	
TRX250TM Recon	250	HA-2501	
TRX300EX	300	HA-3094	KN-113
TRX400EX	397	HA-4099	KN-113
TRX400FA Rancher AT	400	HA-3500	KN-111
TRX400FGA Rancher AT GPScape	397	HA-3500	KN-111
TRX420 Rancher A/T	420	HA-4207	
TRX420 Rancher M/T	420	HA-4207	KN-113
TRX450ER	450	BD-6500	KN-116
TRX450R	450	BD-6500	KN-116
TRX500FA Foreman Rubicon	500	HA-5000	KN-111
TRX500FE Foreman 4x4 ES	500	HA-5000	KN-113
TRX500FGA Foreman Rubicon GPScape	500	HA-5000	KN-111
TRX500FM Foreman 4x4	500	HA-5000	KN-113
TRX500FPE Foreman 4x4 ES w/PS	500	HA-5000	KN-113
TRX680FA Rincon	680	HA-6806	KN-111
TRX680FGA Rincon GPScape	680	HA-6806	KN-111
VFR800F Interceptor	782	HA-8098	KN-204
		HA-8098	KN-204C
VT600C Shadow VLX	600	HA-6199	KN-303
		HA-6199	KN-303C
VT600CD Shadow VLX Deluxe	600	HA-6199	KN-303
		HA-6199	KN-303C
VT750C Shadow Aero	750	HA-7504	KN-204
		HA-7504	KN-204C
VT750C2 Shadow Spirit	750	HA-7504	KN-204
		HA-7504	KN-204C
VT750DC Shadow Spirit	750	HA-7500	KN-303
		HA-7500	KN-303C
VT1100C Shadow Spirit	1100	HA-1187	KN-303
		HA-1187	KN-303C
VT1100C2 Shadow Sabre	1100	HA-1187	KN-303
		HA-1187	KN-303C
VTX1300C	1300	HA-1330	KN-204
		HA-1330	KN-204C
VTX1300R	1300	HA-1330	KN-204
		HA-1330	KN-204C
VTX1300S	1300	HA-1330	KN-204
		HA-1330	KN-204C
VTX1800C	1795	HA-1802	KN-204
		HA-1802	KN-204C
VTX1800F	1795	HA-1802	KN-204
		HA-1802	KN-204C
VTX1800N	1795	HA-1802	KN-204
		HA-1802	KN-204C
VTX1800R	1795	HA-1802	KN-204

*Indicates 2 filters required ♦ - Intake kit available - see page 80 Applications updated daily at knfilters.com

Vehicle	Engine Type	Air Filter	Oil Filter
2007 HONDA			
VTX1800R	1795	HA-1802	KN-204C
VTX1800T	1795	HA-1802	KN-204
		HA-1802	KN-204C
XL1000 Varadero	1000	HA-1003	KN-204
		HA-1003	KN-204C
XR650L	650	HA-6592	KN-112
XR650R	650	HA-6500	KN-112
2006 HONDA			
599	599	HA-6098	KN-204
		HA-6098	KN-204C
919	919	HA-9002	KN-204
		HA-9002	KN-204C
Accord	2.4L L4 F/I	33-2276 ♦	HP-1010
Accord	3.0L V6 F/I	33-2277 ♦	HP-1010
Accord Hybrid	3.0L V6 F/I	33-2299	HP-1010
Accord VIII	2.0L L4 F/I - Non-US	33-2276 ♦	
Accord VIII	2.4L L4 F/I - Non-US	33-2276 ♦	HP-1010
ARX1200N2 Aquatrax R-12	1235		KN-204
			KN-204C
ARX1200N3 Aquatrax F-12	1235		KN-204
			KN-204C
ARX1200T2 Aquatrax R-12X	1235		KN-204
			KN-204C
ARX1200T3 Aquatrax F-12X	1235		KN-204
			KN-204C
ARX1200T3D Aquatrax F-12X GPScape	1235		KN-204
			KN-204C
CB600 Hornet	600	HA-6098	KN-204
		HA-6098	KN-204C
CB600F	600		KN-204
			KN-204C
CB600F Hornet	600		KN-204
			KN-204C
CB900F Hornet	919		KN-204
			KN-204C
CB1300	1300	HA-1301	KN-204
		HA-1301	KN-204C
CB1300F	1300		KN-204
			KN-204C
CB1300S	1300		KN-204
			KN-204C
CBF250	250		KN-113
CBF600	599	HA-6098	KN-204
		HA-6098	KN-204C
CBF600S	599	HA-6098	KN-204
		HA-6098	KN-204C
CBF1000 F	1000		KN-204
			KN-204C
CBR125R	125	HA-1502	
CBR600F	600	HA-6001	KN-204
		HA-6001	KN-204C
CBR600F4i	600	HA-6001	KN-204
		HA-6001	KN-204C
CBR600RR	600	HA-6003	KN-204

Vehicle	Engine Type	Air Filter	Oil Filter
2006 HONDA			
CBR600RR	600	HA-6003	KN-204C
CBR1000RR	999	HA-1004	KN-204
		HA-1004	KN-204C
CBR1000RR	999 - Race Specific	HA-1004R	KN-204
CBR1100XX Super Blackbird	1100	HA-1199	KN-303
		HA-1199	KN-303C
CHF50 Metropolitan	50	HA-0502	
Civic	1.3L L4 F/I	33-2348	HP-1010
Civic	1.8L L4 F/I	33-2342 ♦	HP-1010
Civic Si	2.0L L4 F/I	33-2343 ♦	HP-1010
Civic VI	1.6L L4 F/I - Exc., Sedan	33-2243 ♦	
Civic VII	1.3L L4 F/I	33-2348	HP-1010
Civic VII	1.8L L4 F/I	33-2342 ♦	HP-1010
Civic VII	2.0L L4 F/I	E-2429 ♦	
CN250 Helix	250	HA-2586	
CR85R	86	HA-8086	
CR85R Expert	86	HA-8086	
CRF80F	80	HA-1088	
CRF100F	100	HA-1088	
CRF150F	150	HA-1503	
CRF230F	230	HA-1503	
CRF250R	250	HA-4503XD	KN-116
CRF250X	250	HA-2505XD	KN-116
CRF450R	444	HA-4503XD	KN-116
CRF450X	444	HA-2505XD	KN-116
CR-V	2.4L L4 F/I	E-2429	HP-1010
CR-V II	2.0L L4 F/I	E-2429	
CR-V II	2.2L L4 DSL	33-2982	
Element	2.4L L4 F/I	E-0771 ♦	HP-1010
FSC600 Silver Wing	582	HA-6002	KN-204
		HA-6002	KN-204C
GL1800 Gold Wing	1800	HA-1801	KN-204
		HA-1801	KN-204C
Insight	1.0L L3 F/I	33-2180	HP-1008
Jazz	1.4L L4 F/I - OEM 17201PWA010	33-2917 ♦	
Jazz	1.4L L4 F/I - OEM 17220REAZ00	33-2872 ♦	
NES125	125	HA-1510	
NPS50 Ruckus	50	HA-0502	
NSS250 Reflex	250	HA-2500-1	
NSS250S Reflex Sport	250	HA-2500-1	
Odyssey	3.5L V6 F/I	33-2309	HP-1010
PES125	125	HA-1510	
Pilot	3.5L V6 F/I	33-2200	HP-1010
PS250 Big Ruckus	250	HA-2500-1	
RC51	1000	HA-5100	KN-204
		HA-5100	KN-204C
Ridgeline	3.5L V6 F/I	33-2323 ♦	HP-1010
S2000	2.0L L4 F/I	E-2435 ♦	HP-1004
S2000	2.2L L4 F/I	E-2435 ♦	HP-1004
SH125	125	HA-1510	
SH150i	150	HA-1510	
ST1300	1300	HA-1302	KN-204
		HA-1302	KN-204C
ST1300 Pan European	1300	HA-1302	KN-204
		HA-1302	KN-204C
TRX90	90	HA-1088	
TRX250EX	225	HA-2501	
TRX250TE Recon ES	250	HA-2501	

*Indicates 2 filters required ♦ - Intake kit available - see page 80 Applications updated daily at knfilters.com

Vehicle	Engine Type	Air Filter	Oil Filter
2006 HONDA			
TRX250TM Recon	250	HA-2501	
TRX300EX	300	HA-3094	KN-113
TRX350FE Rancher 4x4 ES	350	HA-3500	KN-113
TRX350FM Rancher 4x4	350	HA-3500	KN-113
TRX350TE Rancher ES	350	HA-3500	KN-113
TRX350TM Rancher	350	HA-3500	KN-113
TRX400EX	397	HA-4099	KN-113
TRX400FA Rancher AT	400	HA-3500	KN-111
TRX400FGA Rancher AT GPScape	397	HA-3500	KN-111
TRX450ER	450	BD-6500	KN-116
TRX450R	450	BD-6500	KN-116
TRX500FA Foreman Rubicon	500	HA-5000	KN-111
TRX500FE Foreman 4x4 ES	500	HA-5000	KN-113
TRX500FGA Foreman Rubicon GPScape	500	HA-5000	KN-111
TRX500FM Foreman 4x4	500	HA-5000	KN-113
TRX500TM Foreman	500	HA-5000	KN-113
TRX680FA Rincon	680	HA-6806	KN-111
TRX680FGA Rincon GPScape	680	HA-6806	KN-111
VFR800F Interceptor	782	HA-8098	KN-204
		HA-8098	KN-204C
VT125C Shadow	121		KN-113
VT600C Shadow VLX	600	HA-6199	KN-303
		HA-6199	KN-303C
VT600CD Shadow VLX Deluxe	600	HA-6199	KN-303
		HA-6199	KN-303C
VT750C Shadow Aero	745	HA-7504	KN-204
		HA-7504	KN-204C
VT750C2 Shadow Spirit	750		KN-204
			KN-204C
VT750DC Shadow Spirit	750	HA-7500	KN-303
		HA-7500	KN-303C
VT1100C Shadow Spirit	1100	HA-1187	KN-303
		HA-1187	KN-303C
VT1100C2 Shadow Sabre	1100	HA-1187	KN-303
		HA-1187	KN-303C
VTR1000 SP-2	1000	HA-5100	KN-204
		HA-5100	KN-204C
VTX1300C	1300	HA-1330	KN-204
		HA-1330	KN-204C
VTX1300R	1300	HA-1330	KN-204
		HA-1330	KN-204C
VTX1300S	1300	HA-1330	KN-204
		HA-1330	KN-204C
VTX1800	1795	HA-1802	KN-204
		HA-1802	KN-204C
VTX1800F	1800		KN-204
VTX1800F	1800		KN-204C
VTX1800N	1800		KN-204
			KN-204C
VTX1800R	1800		KN-204
			KN-204C
VTX1800S	1800		KN-204
			KN-204C
XR650L	650	HA-6592	KN-112
XR650R	650	HA-6500	KN-112
2005 HONDA			
919	919	HA-9002	KN-204
		HA-9002	KN-204C
Accord	2.4L L4 F/I	33-2276 ♦	HP-1010
Accord	3.0L V6 F/I	33-2277 ♦	HP-1010
Accord Hybrid	3.0L V6 F/I	33-2299	HP-1010
Accord VIII	2.0L L4 F/I - Non-US	33-2276 ♦	
Accord VIII	2.4L L4 F/I - Non-US	33-2276 ♦	HP-1010
ARX1200N2 Aquatrax R-12	1235		KN-204
			KN-204C
ARX1200T2 Aquatrax R-12X	1235		KN-204
			KN-204C
ARX1200T3 Aquatrax F-12X	1235		KN-204
			KN-204C
ARX1200T3D Aquatrax F-12X GPScape	1235		KN-204
			KN-204C
CB600 Hornet	600	HA-6098	KN-204
		HA-6098	KN-204C
CB600F	600		KN-204
			KN-204C
CB600F Hornet	600		KN-204
			KN-204C
CB900F Hornet	919	HA-9002	KN-204
		HA-9002	KN-204C
CB1300 Super Four	1300	HA-1301	KN-204
		HA-1301	KN-204C
CBF600	599	HA-6098	KN-204
		HA-6098	KN-204C
CBF600F	600	HA-6098	
CBF600S	599	HA-6098	KN-204
		HA-6098	KN-204C
CBR125R	125	HA-1502	
CBR600F	600	HA-6001	KN-204
		HA-6001	KN-204C
CBR600F4i	600	HA-6001	KN-204
		HA-6001	KN-204C
CBR600RR	600	HA-6003	KN-204
		HA-6003	KN-204C
CBR1000RR	999	HA-1004	KN-204
		HA-1004	KN-204C
CBR1000RR	999 - Race Specific	HA-1004R	KN-204
CBR1100XX Super Blackbird	1100	HA-1199	KN-303
		HA-1199	KN-303C
CHF50 Metropolitan	50	HA-0502	
Civic	1.3L L4 F/I	33-2338	HP-1010

*Indicates 2 filters required ♦ - Intake kit available - see page 80 Applications updated daily at knfilters.com

Vehicle	Engine Type	Air Filter	Oil Filter
2005 HONDA			
Civic DX	1.7L L4 F/I	33-2192 ♦	HP-1010
Civic EX	1.7L L4 F/I	33-2192 ♦	HP-1010
Civic GX	1.7L L4 F/I	33-2192	HP-1010
Civic HX	1.7L L4 F/I	33-2192	HP-1010
Civic LX	1.7L L4 F/I	33-2192 ♦	HP-1010
Civic Si	1.7L L4 F/I	33-2192 ♦	HP-1010
Civic Si	2.0L L4 F/I	E-2429 ♦	HP-1010
Civic Value Package	1.7L L4 F/I	33-2192 ♦	HP-1010
Civic VI	1.3L L4 F/I		HP-1010
Civic VI	1.4L L4 F/I	33-2243 ♦	
Civic VI	1.6L L4 F/I - Exc., Sedan	33-2243 ♦	
Civic VI	1.7L L4 F/I	33-2192 ♦	HP-1010
Civic VI	2.0L L4 F/I	E-2429 ♦	
Civic VII	1.3L L4 F/I		HP-1010
Civic VII	1.8L L4 F/I	33-2342 ♦	
CN250 Helix	250	HA-2586	
CR85R	86	HA-8086	
CR85R Expert	86	HA-8086	
CRF80F	80	HA-1088	
CRF100F	100	HA-1088	
CRF150F	150	HA-1503	
CRF230F	230	HA-1503	
CRF250R	250	HA-4503XD	KN-116
CRF250X	250	HA-2505XD	KN-116
CRF450R	444	HA-4503XD	KN-116
CRF450X	444	HA-2505XD	KN-116
CR-V	2.4L L4 F/I	E-2429	HP-1010
CR-V II	2.0L L4 F/I	E-2429	
CR-V II	2.2L L4 DSL	33-2982	
Element	2.4L L4 F/I	E-0771 ♦	HP-1010
FJS600 Silver Wing	600	HA-6002	KN-204
		HA-6002	KN-204C
FMX650	650	HA-6505	KN-112
FSC600 Silver Wing	582	HA-6002	KN-204
		HA-6002	KN-204C
GL1800 Gold Wing	1800	HA-1801	KN-204
		HA-1801	KN-204C
Insight	1.0L L3 F/I	33-2180	HP-1008
Jazz	1.2L L4 F/I - OEM 17201PWA010	33-2917	
Jazz	1.2L L4 F/I - OEM 17220REAZ00	33-2872	
Jazz	1.4L L4 F/I - OEM 17201PWA010	33-2917 ♦	
Jazz	1.4L L4 F/I - OEM 17220REAZ00	33-2872 ♦	
Jazz	1.5L L4 F/I - OEM 17201PWA010	33-2917	
NPS50 Ruckus	50	HA-0502	
NRX1800 Valkyrie Rune	1832		KN-204
			KN-204C
NSS250 Reflex	250	HA-2500-1	
NSS250S Reflex Sport	250	HA-2500-1	
Odyssey	3.5L V6 F/I	33-2309	HP-1010
Pilot	3.5L V6 F/I	33-2200	HP-1010
PS250 Big Ruckus	250	HA-2500-1	
RC51	990	HA-5100	KN-204
		HA-5100	KN-204C
S2000	2.0L L4 F/I	E-2435 ♦	HP-1004
S2000	2.2L L4 F/I	E-2435 ♦	HP-1004
SH125	125	HA-1510	
ST1300	1300	HA-1302	KN-204
		HA-1302	KN-204C

Vehicle	Engine Type	Air Filter	Oil Filter
2005 HONDA			
ST1300 Pan European	1300	HA-1302	KN-204
		HA-1302	KN-204C
TRX90	90	HA-1088	
TRX250EX	225	HA-2501	
TRX250TE Recon ES	250	HA-2501	
TRX250TM Recon	250	HA-2501	
TRX300EX	300	HA-3094	KN-113
TRX350FE Rancher 4x4 ES	350	HA-3500	KN-113
TRX350FM Rancher 4x4	350	HA-3500	KN-113
TRX350TE Rancher ES	350	HA-3500	KN-113
TRX350TM Rancher	325	HA-3500	KN-113
TRX400EX	397	HA-4099	KN-113
TRX400FA Rancher AT	400	HA-3500	KN-111
TRX400FGA Rancher AT GPScape	397	HA-3500	KN-111
TRX450R	444	HA-4504	KN-116
TRX500FA Foreman Rubicon	500	HA-5000	KN-111
TRX500FE Foreman 4x4 ES	500	HA-5000	KN-113
TRX500FGA Foreman Rubicon GPScape	500	HA-5000	KN-111
TRX500FM Foreman 4x4	500	HA-5000	KN-113
TRX500TM Foreman	500	HA-5000	KN-113
TRX650FA Rincon	644	HA-5000	KN-111
TRX650FGA Rincon GPScape	650	HA-5000	KN-111
VFR800F Interceptor	782	HA-8098	KN-204
		HA-8098	KN-204C
VT600C Shadow VLX	600	HA-6199	KN-303
		HA-6199	KN-303C
VT600CD Shadow VLX Deluxe	600	HA-6199	KN-303
		HA-6199	KN-303C
VT750C Shadow Aero	750	HA-7504	KN-204
		HA-7504	KN-204C
VT750C2 Shadow Spirit	750		KN-204
			KN-204C
VT750DC Shadow Spirit	750	HA-7500	KN-303
		HA-7500	KN-303C
VT1100C Shadow Spirit	1100	HA-1187	KN-303
		HA-1187	KN-303C
VT1100C2 Shadow Sabre	1100	HA-1187	KN-303
		HA-1187	KN-303C
VTR1000 Firestorm	1000	HA-0011	KN-204
		HA-0011	KN-204C
VTR1000 SP-2	1000	HA-5100	KN-204
		HA-5100	KN-204C
VTR1000 Super Hawk	1000	HA-0011	KN-204

Vehicle	Engine Type	Air Filter	Oil Filter
2005 HONDA			
VTR1000 Super Hawk	1000	HA-0011	KN-204C
VTX1300C	1284	HA-1330	KN-204
		HA-1330	KN-204C
VTX1300R	1284	HA-1330	KN-204
		HA-1330	KN-204C
VTX1300S	1284	HA-1330	KN-204
		HA-1330	KN-204C
VTX1800	1795	HA-1802	KN-204
		HA-1802	KN-204C
VTX1800F	1800		KN-204
			KN-204C
VTX1800N	1800		KN-204
			KN-204C
VTX1800R	1800		KN-204
			KN-204C
VTX1800S	1800		KN-204
			KN-204C
XL650V Transalp	650	HA-6501	KN-303
		HA-6501	KN-303C
XL1000 Varadero	1000	HA-1003	KN-204
		HA-1003	KN-204C
XR650L	650	HA-6592	KN-112
XR650R	650	HA-6500	KN-112
2004 HONDA			
599	599	HA-6098	KN-204
		HA-6098	KN-204C
919	919	HA-9002	KN-204
		HA-9002	KN-204C
Accord	2.4L L4 F/I	33-2276 ♦	HP-1010
Accord	3.0L V6 F/I	33-2277 ♦	HP-1010
Accord VIII	2.0L L4 F/I - Non-US	33-2276 ♦	
Accord VIII	2.4L L4 F/I - Non-US	33-2276 ♦	HP-1010
ARX1200N2 Aquatrax R-12	1235		KN-204
			KN-204C
ARX1200N3 Aquatrax F-12	1235		KN-204
			KN-204C
ARX1200T2 Aquatrax R-12X	1235		KN-204
			KN-204C
ARX1200T3 Aquatrax F-12X	1235		KN-204
			KN-204C
CB600 Hornet	600	HA-6098	KN-204
		HA-6098	KN-204C
CB600F	600		KN-204
			KN-204C
CB600F Hornet	600		KN-204
			KN-204C
CB900 Hornet	919	HA-9002	KN-204
		HA-9002	KN-204C
CBF600	599	HA-6098	KN-204
		HA-6098	KN-204C
CBF600S	599	HA-6098	KN-204
		HA-6098	KN-204C
CBR600F	600	HA-6001	KN-204
		HA-6001	KN-204C
CBR600F4i	600	HA-6001	KN-204
		HA-6001	KN-204C

Vehicle	Engine Type	Air Filter	Oil Filter
2004 HONDA			
CBR600RR	600	HA-6003	KN-204
		HA-6003	KN-204C
CBR1000RR	999	HA-1004	KN-204
		HA-1004	KN-204C
CBR1000RR	999 - Race Specific	HA-1004R	KN-204
CBR1100XX Super Blackbird	1100	HA-1199	KN-303
		HA-1199	KN-303C
CHF50 Metropolitan	50	HA-0502	
Civic	1.3L L4 F/I	33-2338	HP-1010
Civic DX	1.7L L4 F/I	33-2192 ♦	HP-1010
		33-2192 ♦	HP-1010
Civic EX	1.7L L4 F/I	33-2192 ♦	HP-1010
		33-2192 ♦	HP-1010
Civic GX	1.7L L4 F/I	33-2192	HP-1010
Civic HX	1.7L L4 F/I	33-2192	HP-1010
		33-2192 ♦	HP-1010
Civic LX	1.7L L4 F/I	33-2192 ♦	HP-1010
		33-2192 ♦	HP-1010
Civic Si	1.7L L4 F/I	33-2192 ♦	HP-1010
		33-2192 ♦	HP-1010
Civic Si	2.0L L4 F/I	E-2429 ♦	HP-1010
Civic Value Package	1.7L L4 F/I	33-2192 ♦	HP-1010
		33-2192 ♦	HP-1010
Civic VI	1.3L L4 F/I		HP-1010
Civic VI	1.4L L4 F/I	33-2243 ♦	
Civic VI	1.6L L4 F/I - Exc., Sedan	33-2243 ♦	
Civic VI	1.7L L4 F/I	33-2192 ♦	HP-1010
Civic VI	2.0L L4 F/I	E-2429 ♦	
CR85R	85	HA-8086	
CR85R Expert	85	HA-8086	
CRF80F	80	HA-1088	
CRF100F	100	HA-1088	
CRF150F	150	HA-1503	
CRF230F	230	HA-1503	
CRF250R	250	HA-4503XD	KN-116
CRF250X	250	HA-2505XD	KN-116
CRF450R	444	HA-4503XD	KN-116
CR-V	2.4L L4 F/I	E-2429 ♦	HP-1010
CR-V II	2.0L L4 F/I	E-2429	
CR-V II	2.2L L4 DSL	33-2982	
Element	2.4L L4 F/I	E-0771 ♦	HP-1010
FJS600 Silver Wing	600	HA-6002	KN-204
		HA-6002	KN-204C
FSC600 Silver Wing	582	HA-6002	KN-204
		HA-6002	KN-204C
GL1800 Gold Wing	1800	HA-1801	KN-204
		HA-1801	KN-204C
Insight	1.0L L3 F/I	33-2180	HP-1008
Jazz	1.2L L4 F/I - OEM 17201PWA010	33-2917	
Jazz	1.2L L4 F/I - OEM 17220REAZ00	33-2872	
Jazz	1.4L L4 F/I - OEM 17201PWA010	33-2917 ♦	
Jazz	1.4L L4 F/I - OEM 17220REAZ00	33-2872 ♦	
Jazz	1.5L L4 F/I - OEM 17220REAZ00	33-2872	
Legend	3.5L V6 F/I	33-2179	
NPS50 Ruckus	50	HA-0502	
NRX1800 Valkyrie Rune	1832		KN-204
			KN-204C

*Indicates 2 filters required ♦ - Intake kit available - see page 80 Applications updated daily at knfilters.com

Vehicle	Engine Type	Air Filter	Oil Filter
2004 HONDA			
NSS250 Reflex	250	HA-2500-1	
NSS250S Reflex Sport	250	HA-2500-1	
Odyssey	3.5L V6 F/I	33-2174	HP-1004
Pilot	3.5L V6 F/I	33-2200	HP-1010
RC51	990	HA-5100	KN-204
		HA-5100	KN-204C
S2000	2.0L L4 F/I	E-2435 ♦	HP-1004
S2000	2.2L L4 F/I	E-2435 ♦	HP-1004
SH150i	150	HA-1510	
ST1300	1300	HA-1302	KN-204
		HA-1302	KN-204C
ST1300 Pan European	1300	HA-1302	KN-204
		HA-1302	KN-204C
TRX90	90	HA-1088	
TRX250EX	225	HA-2501	
TRX250TE Recon ES	250	HA-2501	
TRX250TM Recon	250	HA-2501	
TRX300EX	300	HA-3094	KN-113
TRX350FE Rancher 4x4 ES	350	HA-3500	KN-113
TRX350FM Rancher 4x4	350	HA-3500	KN-113
TRX350TE Rancher ES	350	HA-3500	KN-113
TRX350TM Rancher	325	HA-3500	KN-113
TRX400EX	397	HA-4099	KN-113
TRX400FA Rancher AT	400	HA-3500	KN-111
TRX400FGA Rancher AT GPScape	397	HA-3500	KN-111
TRX450FE Foreman ES	450	HA-3098	KN-113
TRX450FM Foreman S	450	HA-3098	KN-113
TRX450R	444	HA-4504	KN-116
TRX500FA Foreman Rubicon	500	HA-5000	KN-111
TRX500FGA Foreman Rubicon GPScape	500	HA-5000	KN-111
TRX650FA Rincon	644	HA-5000	KN-111
TRX650FGA Rincon GPScape	650	HA-5000	KN-111
VFR800F Interceptor	782	HA-8098	KN-204
		HA-8098	KN-204C
VT600C Shadow VLX	600	HA-6199	KN-303
		HA-6199	KN-303C
VT600CD Shadow VLX Deluxe	600	HA-6199	KN-303
		HA-6199	KN-303C
VT750C Shadow Aero	750	HA-7504	KN-204
		HA-7504	KN-204C
VT750C2 Shadow Spirit	750		KN-204
			KN-204C
VT750DC Shadow Spirit	750		KN-303
			KN-303C
VT1100C Shadow Spirit	1100	HA-1187	KN-303
2004 HONDA			
VT1100C Shadow Spirit	1100	HA-1187	KN-303C
VT1100C2 Shadow Sabre	1100	HA-1187	KN-303
		HA-1187	KN-303C
VTR1000 Firestorm	1000	HA-0011	KN-204
		HA-0011	KN-204C
VTR1000 Super Hawk	1000	HA-0011	KN-204
		HA-0011	KN-204C
VTX1300 Retro	1284	HA-1330	KN-204
		HA-1330	KN-204C
VTX1300C	1284	HA-1330	KN-204
		HA-1330	KN-204C
VTX1300S	1284	HA-1330	KN-204
		HA-1330	KN-204C
VTX1800	1795	HA-1802	KN-204
		HA-1802	KN-204C
VTX1800 Retro	1795		KN-204
			KN-204C
VTX1800N	1800		KN-204
			KN-204C
VTX1800S	1800		KN-204
			KN-204C
XL1000 Varadero	1000	HA-1003	KN-204
		HA-1003	KN-204C
XR250R	250	HA-1312	KN-112
XR400R	397	HA-1314	KN-112
XR650L	650	HA-6592	KN-112
XR650R	650	HA-6500	KN-112
2003 HONDA			
919	919	HA-9002	KN-204
		HA-9002	KN-204C
Accord	2.4L L4 F/I	33-2276 ♦	HP-1010
Accord	3.0L V6 F/I	33-2277 ♦	HP-1010
Accord VII	1.8L L4 F/I	33-2124	
Accord VII	2.0L L4 F/I	33-2124	
Accord VII	3.0L V6 F/I	33-2133	HP-1004
Accord VIII	2.0L L4 F/I - Non-US	33-2276 ♦	
Accord VIII	2.4L L4 F/I - Non-US	33-2276 ♦	HP-1010
ARX1200N3 Aquatrax F-12	1235		KN-204
			KN-204C
ARX1200T2 Aquatrax R-12X	1235		KN-204
			KN-204C
ARX1200T3 Aquatrax F-12X	1235		KN-204
			KN-204C
CB600 Hornet	600	HA-6098	KN-303
		HA-6098	KN-303C
CB750 Nighthawk	750	HA-7591	KN-303
		HA-7591	KN-303C
CB900 Hornet	919	HA-9002	KN-204
		HA-9002	KN-204C
CB1300 Super Four	1300	HA-1301	KN-204
		HA-1301	KN-204C
CBR125R	125	HA-1502	
CBR600F	600	HA-6001	KN-204
		HA-6001	KN-204C
CBR600F4i	600	HA-6001	KN-204

*Indicates 2 filters required ♦ - Intake kit available - see page 80 Applications updated daily at knfilters.com

Vehicle	Engine Type	Air Filter	Oil Filter
2003 HONDA			
CBR600F4i	600	HA-6001	KN-204C
CBR600RR	600	HA-6003	KN-204
		HA-6003	KN-204C
CBR900RR Fireblade	900	HA-9502	KN-204
		HA-9502	KN-204C
CBR954RR	954	HA-9502	KN-204
		HA-9502	KN-204C
CBR1100XX Blackbird	1100	HA-1199	KN-303
		HA-1199	KN-303C
CHF50 Metropolitan	50	HA-0502	
Civic	1.3L L4 F/I	33-2338	HP-1010
Civic DX	1.7L L4 F/I	33-2192 ♦	HP-1010
		33-2192 ♦	HP-1010
Civic EX	1.7L L4 F/I	33-2192 ♦	HP-1010
		33-2192 ♦	HP-1010
Civic GX	1.7L L4 F/I	33-2192	HP-1010
Civic HX	1.7L L4 F/I	33-2192	HP-1010
		33-2192 ♦	HP-1010
Civic LX	1.7L L4 F/I	33-2192 ♦	HP-1010
		33-2192 ♦	HP-1010
Civic Si	1.7L L4 F/I	33-2192 ♦	HP-1010
Civic Si	2.0L L4 F/I	E-2429 ♦	HP-1010
Civic VI	1.4L L4 F/I	33-2243 ♦	
Civic VI	1.6L L4 F/I - Exc., Sedan	33-2243 ♦	
Civic VI	1.7L L4 F/I	33-2192 ♦	HP-1010
Civic VI	2.0L L4 F/I	E-2429 ♦	
CR85R	85	HA-8086	
CR85R Expert	85	HA-8086	
CRF150F	150	HA-1503	
CRF230F	230	HA-1503	
CRF450R	444	HA-4503XD	KN-116
CR-V	2.4L L4 F/I	E-2429 ♦	HP-1010
CR-V II	2.0L L4 F/I	E-2429	
Element	2.4L L4 F/I	E-0771 ♦	HP-1010
FJS600 Silver Wing	600	HA-6002	KN-204
		HA-6002	KN-204C
FSC600 Silver Wing	582	HA-6002	KN-204
		HA-6002	KN-204C
GL1500C Valkyrie	1500	HA-1596	KN-303
		HA-1596	KN-303C
GL1800 Gold Wing	1800	HA-1801	KN-204
		HA-1801	KN-204C
Insight	1.0L L3 F/I	33-2180	HP-1008
Jazz	1.2L L4 F/I - OEM 17201PWA010	33-2917	
Jazz	1.2L L4 F/I - OEM 17220REAZ00	33-2872	
Jazz	1.4L L4 F/I - OEM 17201PWA010	33-2917 ♦	
Jazz	1.4L L4 F/I - OEM 17220REAZ00	33-2872 ♦	
NES125	125	HA-1510	
NPS50 Ruckus	50	HA-0502	
NSS250 Reflex	250	HA-2500-1	
Odyssey	3.5L V6 F/I	33-2174	HP-1004
Pilot	3.5L V6 F/I	33-2200	HP-1004
RC51	990	HA-5100	KN-204
		HA-5100	KN-204C
S2000	2.0L L4 F/I	E-2435 ♦	HP-1004
SES125	125	HA-1510	
ST1300	1300	HA-1302	KN-204
		HA-1302	KN-204C
ST1300 Pan European	1300	HA-1302	KN-204

Vehicle	Engine Type	Air Filter	Oil Filter
2003 HONDA			
ST1300 Pan European	1300	HA-1302	KN-204C
TRX90	90	HA-1088	
TRX250EX	225	HA-2501	
TRX250TE Recon ES	250	HA-2501	
TRX250TM Recon	250	HA-2501	
TRX300EX	300	HA-3094	KN-113
TRX350FE Rancher 4x4 ES	350	HA-3500	KN-113
TRX350FM Rancher 4x4	350	HA-3500	KN-113
TRX350TE Rancher ES	350	HA-3500	KN-113
TRX350TM Rancher	325	HA-3500	KN-113
TRX400EX	397	HA-4099	KN-113
TRX400FW Foreman 4x4	395	HA-3098	KN-113
TRX450FE Foreman ES	433	HA-3098	KN-113
TRX450FM Foreman S	433	HA-3098	KN-113
TRX500FA Foreman Rubicon	500	HA-5000	KN-111
TRX650FA Rincon	644	HA-5000	KN-111
VF750C Magna	750	HA-7594	KN-303
		HA-7594	KN-303C
VFR800F Interceptor	782	HA-8098	KN-204
		HA-8098	KN-204C
VT600C Shadow VLX	600	HA-6199	KN-303
		HA-6199	KN-303C
VT600CD Shadow VLX Deluxe	600	HA-6199	KN-303
		HA-6199	KN-303C
VT750CD Shadow A.C.E. Deluxe	750	HA-7500	KN-303
		HA-7500	KN-303C
VT750DC Shadow Spirit	750	HA-7500	KN-303
		HA-7500	KN-303C
VT1100C Shadow Spirit	1100	HA-1187	KN-303
		HA-1187	KN-303C
VT1100C2 Shadow Sabre	1100	HA-1187	KN-303
		HA-1187	KN-303C
VTR1000 Firestorm	1000	HA-0011	KN-303
		HA-0011	KN-303C
VTR1000 SP-2	1000	HA-5100	KN-204
		HA-5100	KN-204C
VTR1000 Super Hawk	1000	HA-0011	KN-204
		HA-0011	KN-204C
VTX1300S	1284	HA-1330	KN-204
		HA-1330	KN-204C
VTX1800	1795	HA-1802	KN-204
		HA-1802	KN-204C
VTX1800 Retro	1795		KN-204
			KN-204C
VTX1800S	1800		KN-204
			KN-204C
XL650V Transalp	650	HA-6501	KN-303
		HA-6501	KN-303C

*Indicates 2 filters required ♦ - Intake kit available - see page 80 Applications updated daily at knfilters.com

2003 HONDA

Vehicle	Engine Type	Air Filter	Oil Filter
XR80R	80	HA-1088	
XR100R	100	HA-1088	
XR250R	250	HA-1312	KN-112
XR400R	400	HA-1314	KN-112
XR650L	650	HA-6592	KN-112
XR650R	650	HA-6500	KN-112
XRV750 Africa Twin	742	HA-0008	KN-303
		HA-0008	KN-303C

2002 HONDA

Vehicle	Engine Type	Air Filter	Oil Filter
919	919	HA-9002	KN-204
		HA-9002	KN-204C
Accord	2.3L L4 F/I	33-2124	HP-1004
Accord	3.0L V6 F/I	33-2133 ♦	HP-1004
Accord VII	1.8L L4 F/I	33-2124	
Accord VII	2.0L L4 F/I	33-2124	
Accord VII	2.2L L4 F/I	33-2124 ♦	
Accord VII	3.0L V6 F/I	33-2133	HP-1004
ARX1200N3 Aquatrax F-12	1235		KN-204
			KN-204C
ARX1200T3 Aquatrax F-12X	1235		KN-204
			KN-204C
CB600 Hornet	600	HA-6098	KN-303
		HA-6098	KN-303C
CB750 Nighthawk	750	HA-7591	KN-303
		HA-7591	KN-303C
CB750 Seven Fifty	750		KN-303
			KN-303C
CB900 Hornet	919	HA-9002	KN-204
		HA-9002	KN-204C
CBR150R	150	HA-1502	
CBR600 Sport	600		KN-204
			KN-204C
CBR600F	600	HA-6001	KN-204
		HA-6001	KN-204C
CBR600F4i	600	HA-6001	KN-204
		HA-6001	KN-204C
CBR900RR Fireblade	900	HA-9502	KN-303
		HA-9502	KN-303C
CBR954RR	954	HA-9502	KN-204
		HA-9502	KN-204C
CBR1100XX Blackbird	1100	HA-1199	KN-303
		HA-1199	KN-303C
CHF50 Metropolitan	50	HA-0502	
Civic DX	1.7L L4 F/I	33-2192 ♦	HP-1010
		33-2192 ♦	HP-1010
Civic EX	1.7L L4 F/I	33-2192 ♦	HP-1010
		33-2192 ♦	HP-1010
Civic GX	1.7L L4 F/I	33-2192	HP-1010
Civic HX	1.7L L4 F/I	33-2192	HP-1010
		33-2192 ♦	HP-1010
Civic LX	1.7L L4 F/I	33-2192 ♦	HP-1010
		33-2192 ♦	HP-1010
Civic Si	1.7L L4 F/I	33-2192 ♦	HP-1010
		33-2192 ♦	HP-1010
Civic Si	2.0L L4 F/I	E-2429 ♦	HP-1010
Civic VI	2.0L L4 F/I	E-2429 ♦	
CR80R	82	HA-8086	
CRF450R	444	HA-4502	KN-116
CR-V	2.4L L4 F/I	E-2429 ♦	HP-1010

2002 HONDA

Vehicle	Engine Type	Air Filter	Oil Filter
CR-V I	2.0L L4 F/I	33-2104	
CR-V II	2.0L L4 F/I	E-2429	
FJS600 Silver Wing	600	HA-6002	KN-204
		HA-6002	KN-204C
FSC600 Silver Wing	582	HA-6002	KN-204
		HA-6002	KN-204C
GL1500C Valkyrie	1520	HA-1596	KN-303
		HA-1596	KN-303C
GL1800 Gold Wing	1800	HA-1801	KN-204
		HA-1801	KN-204C
Insight	1.0L L3 F/I	33-2180	HP-1008
Jazz	1.2L L4 F/I - OEM 17220REAZ00	33-2872	
Jazz	1.4L L4 F/I - OEM 17201PWA010	33-2917 ♦	
Jazz	1.4L L4 F/I - OEM 17220REAZ00	33-2872 ♦	
NSS250 Reflex	250	HA-2500-1	
Odyssey	3.5L V6 F/I	33-2174	HP-1004
Passport	3.2L V6 F/I	33-2108	HP-1004
RC51	990	HA-5100	KN-204
		HA-5100	KN-204C
RS125 Nova Sonic	125	HA-1202	
S2000	2.0L L4 F/I	E-2435 ♦	HP-1004
SES125	125	HA-1510	
ST1100	1100	HA-1191	KN-303
		HA-1191	KN-303C
TRX90	90	HA-1088	
TRX250EX	225	HA-2501	
TRX250TE Recon ES	250	HA-2501	
TRX250TM Recon	250	HA-2501	
TRX300EX	300	HA-3094	KN-113
TRX350 EX Sportrax	350		KN-113
TRX350FE Rancher 4x4 ES	350	HA-3500	KN-113
TRX350FM Rancher 4x4	350	HA-3500	KN-113
TRX350TE Rancher ES	350	HA-3500	KN-113
TRX350TM Rancher	325	HA-3500	KN-113
TRX400EX	397	HA-4099	KN-113
TRX400FW Foreman 4x4	395	HA-3098	KN-113
TRX450FE Foreman ES	433	HA-3098	KN-113
TRX450FM Foreman S	450	HA-3098	KN-113
TRX450S Foreman S	450		KN-113
TRX500FA Foreman Rubicon	500	HA-5000	KN-111
VF750C Magna	750	HA-7594	KN-303
		HA-7594	KN-303C
VFR800F Interceptor	782	HA-8098	KN-204
		HA-8098	KN-204C
VT600C Shadow VLX	600	HA-6199	KN-303
		HA-6199	KN-303C
VT600CD Shadow VLX Deluxe	600	HA-6199	KN-303
		HA-6199	KN-303C
VT750C Shadow	750		KN-303
			KN-303C
VT750CD Shadow A.C.E. Deluxe	750	HA-7500	KN-303
		HA-7500	KN-303C
VT750DC Shadow Spirit	750	HA-7500	KN-303

*Indicates 2 filters required ♦ - Intake kit available - see page 80 Applications updated daily at knfilters.com

Vehicle	Engine Type	Air Filter	Oil Filter
2002 HONDA			
VT750DC Shadow Spirit	750	HA-7500	KN-303C
VT1100C Shadow Spirit	1100	HA-1187	KN-303
		HA-1187	KN-303C
VT1100C2 Shadow Sabre	1100	HA-1187	KN-303
		HA-1187	KN-303C
VT1100C3 Shadow Aero	1100	HA-1187	KN-303
		HA-1187	KN-303C
VT1100T Shadow A.C.E. Tourer	1100		KN-303
			KN-303C
VTR1000 Firestorm	1000	HA-0011	KN-303
		HA-0011	KN-303C
VTR1000 SP-1	1000	HA-5100	KN-204
		HA-5100	KN-204C
VTR1000 SP-2	1000	HA-5100	KN-204
		HA-5100	KN-204C
VTR1000 Super Hawk	1000	HA-0011	KN-204
		HA-0011	KN-204C
VTX1800	1795	HA-1802	KN-204
		HA-1802	KN-204C
VTX1800 Retro	1795		KN-204
			KN-204C
VTX1800S	1800		KN-204
			KN-204C
XR80R	80	HA-1088	
XR100R	100	HA-1088	
XR200R	200	HA-2584	
XR250R	250	HA-1312	KN-112
XR400R	400	HA-1314	KN-112
XR650L	650	HA-6592	KN-112
XR650R	650	HA-6500	KN-112
XRV750 Africa Twin	742	HA-0008	KN-303
		HA-0008	KN-303C
2001 HONDA			
Accord	2.3L L4 F/I	33-2124	HP-1004
Accord	3.0L V6 F/I	33-2133 ♦	HP-1004
Accord VII	1.8L L4 F/I	33-2124	
Accord VII	2.0L L4 F/I	33-2124	
Accord VII	2.2L L4 F/I	33-2124 ♦	
Accord VII	3.0L V6 F/I	33-2133	HP-1004
CB600 Hornet	600	HA-6098	KN-303
		HA-6098	KN-303C
CB750 Nighthawk	750	HA-7591	KN-303
		HA-7591	KN-303C
CBR600 Sport	600		KN-204
			KN-204C
CBR600F	600	HA-6001	KN-204
		HA-6001	KN-204C
CBR600F4i	600	HA-6001	KN-204
		HA-6001	KN-204C
CBR900RR Fireblade	900	HA-9200	KN-303
		HA-9200	KN-303C
CBR929RR	929	HA-9200	KN-204
		HA-9200	KN-204C
CBR1100XX Blackbird	1100	HA-1199	KN-303

Vehicle	Engine Type	Air Filter	Oil Filter
2001 HONDA			
CBR1100XX Blackbird	1100	HA-1199	KN-303C
Civic DX	1.7L L4 F/I	33-2192 ♦	HP-1010
		33-2192 ♦	HP-1010
Civic EX	1.7L L4 F/I	33-2192 ♦	HP-1010
		33-2192 ♦	HP-1010
Civic GX	1.7L L4 F/I	33-2192	HP-1010
Civic HX	1.7L L4 F/I	33-2192	HP-1010
		33-2192 ♦	HP-1010
Civic LX	1.7L L4 F/I	33-2192 ♦	HP-1010
		33-2192 ♦	HP-1010
Civic VI	1.6L L4 F/I - Exc., Sedan	33-2243 ♦	
Civic VI	1.7L L4 F/I	33-2192 ♦	HP-1010
Civic VI	2.0L L4 F/I	E-2429 ♦	
CN250 Helix	250	HA-2586	
CR125R	125	HA-2591	
CR250R	250	HA-2591	
CR500R	500	HA-2591	
CR80R	82	HA-8086	
CR-V	2.0L L4 F/I	33-2104	HP-1004
CR-V I	2.0L L4 F/I	33-2104	HP-1004
GL1500 Valkyrie Interstate	1520	HA-1596	KN-303
		HA-1596	KN-303C
GL1500C Valkyrie	1520	HA-1596	KN-303
		HA-1596	KN-303C
GL1500SE Gold Wing SE	1500		KN-303
			KN-303C
GL1800 Gold Wing	1800	HA-1801	KN-204
		HA-1801	KN-204C
Insight	1.0L L3 F/I	33-2180	HP-1008
Integra Type R	1.8L L4 F/I	E-2427	
Jazz	1.4L L4 F/I - OEM 17201PWA010	33-2917	
Jazz	1.4L L4 F/I - OEM 17220REAZ00	33-2872	
NSS250 Reflex	250	HA-2500-1	
Odyssey	3.5L V6 F/I	33-2174	HP-1004
Passport	3.2L V6 F/I	33-2108	HP-1004
Prelude	2.2L L4 F/I	33-2090	HP-1004
Prelude V	2.2L L4 F/I		HP-1004
RC51	990	HA-5100	KN-204
		HA-5100	KN-204C
S2000	2.0L L4 F/I	E-2435 ♦	HP-1004
SH150i	150	HA-1510	
ST1100	1100	HA-1191	KN-303
		HA-1191	KN-303C
ST1100 ABS II	1100	HA-1191	KN-303
		HA-1191	KN-303C
TRX90	90	HA-1088	
TRX250 Recon	250	HA-2597	
TRX250EX	225	HA-2501	
TRX300 Fourtrax	280	HA-3098	KN-113
TRX300EX	300	HA-3094	KN-113
TRX300FW Fourtrax 4x4	300		KN-113
TRX350FE Rancher 4x4 ES	350	HA-3500	KN-113
TRX350FM Rancher 4x4	350	HA-3500	KN-113
TRX350TE Rancher ES	350	HA-3500	KN-113
TRX350TM Rancher	350	HA-3500	KN-113

*Indicates 2 filters required ♦ - Intake kit available - see page 80 Applications updated daily at knfilters.com

2001 HONDA

Vehicle	Engine Type	Air Filter	Oil Filter
TRX400EX	397	HA-4099	KN-113
TRX400FW Foreman 4x4	395	HA-3098	KN-113
TRX450ES Foreman ES	433	HA-3098	KN-113
TRX450S Foreman S	450	HA-3098	KN-113
TRX500FA Foreman Rubicon	500	HA-5000	KN-111
VF750C Magna	750	HA-7594	KN-303
		HA-7594	KN-303C
VFR800F Interceptor	782	HA-8098	KN-303
		HA-8098	KN-303C
VT600C Shadow VLX	600	HA-6199	KN-303
		HA-6199	KN-303C
VT600CD Shadow VLX Deluxe	600	HA-6199	KN-303
		HA-6199	KN-303C
VT750 C2 Shadow	750		KN-303
			KN-303C
VT750C Shadow	750		KN-303
			KN-303C
VT750CD Shadow A.C.E. Deluxe	750	HA-7500	KN-303
		HA-7500	KN-303C
VT750DC Shadow Spirit	750	HA-7500	KN-303
		HA-7500	KN-303C
VT1100C Shadow Spirit	1100	HA-1187	KN-303
		HA-1187	KN-303C
VT1100C2 Shadow Sabre	1100	HA-1187	KN-303
		HA-1187	KN-303C
VT1100C3 Shadow Aero	1100	HA-1187	KN-303
		HA-1187	KN-303C
VT1100T Shadow A.C.E. Tourer	1100	HA-1187	KN-303
		HA-1187	KN-303C
VTR1000 Firestorm	1000	HA-0011	KN-303
		HA-0011	KN-303C
VTR1000 SP-1	1000	HA-5100	KN-204
		HA-5100	KN-204C
VTR1000 Super Hawk	1000	HA-0011	KN-204
		HA-0011	KN-204C
XL650V Transalp	650	HA-6501	KN-303
		HA-6501	KN-303C
XL1000 Varadero	1000	HA-0011	KN-303
		HA-0011	KN-303C
XR80R	80	HA-1088	
XR100R	100	HA-1088	
XR200R	200	HA-2584	
XR250R	250	HA-1312	KN-112
XR400R	400	HA-1314	KN-112
XR600R	600		KN-112
XR650L	650	HA-6592	KN-112
XR650R	650	HA-6500	KN-112
XRV750 Africa Twin	742	HA-0008	KN-303
		HA-0008	KN-303C

2000 HONDA

Vehicle	Engine Type	Air Filter	Oil Filter
Accord	2.3L L4 F/I	33-2124	HP-1004
Accord	3.0L V6 F/I	33-2133 ♦	HP-1004
Accord VII	1.8L L4 F/I	33-2124	
Accord VII	2.0L L4 F/I	33-2124	
Accord VII	2.2L L4 F/I	33-2124 ♦	
Accord VII	3.0L V6 F/I	33-2133	HP-1004
CB400 VTEC	400	HA-4098	
CB400SF	400	HA-4020	
CB600 Hornet	600	HA-6098	KN-303
		HA-6098	KN-303C
CB750 Nighthawk	750	HA-7591	KN-303
		HA-7591	KN-303C
CBR600F4	600	HA-6099	KN-303
		HA-6099	KN-303C
CBR900RR Fireblade	900	HA-9200	KN-303
		HA-9200	KN-303C
CBR929RR	929	HA-9200	KN-204
		HA-9200	KN-204C
CBR1100XX Blackbird	1100	HA-1199	KN-303
		HA-1199	KN-303C
Civic CX	1.6L L4 F/I	33-2120	HP-1004
Civic DX	1.6L L4 F/I	33-2120	HP-1004
Civic EX	1.6L L4 F/I	33-2104 ♦	HP-1004
Civic GX	1.6L L4 F/I	33-2104	HP-1004
Civic HX	1.6L L4 F/I	33-2104	HP-1004
Civic LX	1.6L L4 F/I	33-2120	HP-1004
Civic Si	1.6L L4 F/I	33-2104 ♦	HP-1004
Civic V	1.4L L4 F/I - D14A3 Eng, D14A4 Eng.	33-2036 ♦	
Civic V	1.4L L4 F/I - D14A7 Eng., D14A8 Eng.	33-2047 ♦	
Civic V	1.5L L4 F/I - 3/4-Door	33-2104 ♦	
Civic V	1.5L L4 F/I - 5-door & AeroDeck	33-2047 ♦	
Civic V	1.6L L4 F/I - 105BHP	33-2036 ♦	
Civic V	1.6L L4 F/I - 114/160BHP	33-2104 ♦	
Civic V	1.6L L4 F/I - 116/125BHP	33-2047 ♦	
Civic V	1.8L L4 F/I	33-2234 ♦	
Civic V	2.0L L4 DSL	33-2761	
CR125R	125	HA-2591	
CR250R	250	HA-2591	
CR500R	500	HA-2591	
CR-V	2.0L L4 F/I	33-2104	HP-1004
CR-V I	2.0L L4 F/I	33-2104	HP-1004
GL1500 Valkyrie Interstate	1520	HA-1596	KN-303
		HA-1596	KN-303C
GL1500A Gold Wing Aspencade	1520	HA-8088	KN-303
		HA-8088	KN-303C
GL1500C Valkyrie	1520	HA-1596	KN-303
		HA-1596	KN-303C
GL1500CT Valkyrie Tourer	1520	HA-1596	KN-303
		HA-1596	KN-303C
GL1500SE Gold Wing SE	1520	HA-8088	KN-303
		HA-8088	KN-303C
Insight	1.0L L3 F/I	33-2180	HP-1008
Integra Type R	1.8L L4 F/I	E-2427	

*Indicates 2 filters required ♦ - Intake kit available - see page 80 Applications updated daily at knfilters.com

Vehicle	Engine Type	Air Filter	Oil Filter
2000 HONDA			
NSR150	150	HA-1598	
Odyssey	3.5L V6 F/I	33-2174	HP-1004
Passport	3.2L V6 F/I	33-2108	HP-1004
Phantom 200	200	HA-2000	
Prelude	2.2L L4 F/I	33-2090	HP-1004
Prelude V	2.0L L4 F/I	33-2090	
Prelude V	2.2L L4 F/I	33-2090	HP-1004
RC51	990	HA-5100	KN-204
		HA-5100	KN-204C
S2000	2.0L L4 F/I	E-2435 ♦	HP-1004
ST1100	1100	HA-1191	KN-303
		HA-1191	KN-303C
ST1100 ABS II	1100	HA-1191	KN-303
		HA-1191	KN-303C
ST1100 Pan European	1100		KN-303
			KN-303C
TRX90	90	HA-1088	
TRX250 Recon	250	HA-2597	
TRX300 Fourtrax	280	HA-3098	KN-113
TRX300EX	300	HA-3094	KN-113
TRX300FW Fourtrax 4x4	300	HA-3098	KN-113
TRX350FE Rancher 4x4 ES	350	HA-3500	KN-113
TRX350FM Rancher 4x4	350	HA-3500	KN-113
TRX350TE Rancher ES	350	HA-3500	KN-113
TRX350TM Rancher	350	HA-3500	KN-113
TRX400EX	397	HA-4099	KN-113
TRX400FW Foreman 4x4	395	HA-3098	KN-113
TRX450ES Foreman ES	433	HA-3098	KN-113
TRX450S Foreman S	450	HA-3098	KN-113
TRX500FA Foreman Rubicon	500		KN-111
VF750C Magna	750	HA-7594	KN-303
		HA-7594	KN-303C
VF750C2 Magna Deluxe	750	HA-7594	KN-303
		HA-7594	KN-303C
VFR800F Interceptor	800	HA-8098	KN-303
		HA-8098	KN-303C
VT600C Shadow VLX	600	HA-6199	KN-303
		HA-6199	KN-303C
VT600CD Shadow VLX Deluxe	600	HA-6199	KN-303
		HA-6199	KN-303C
VT750C Shadow	750		KN-303
			KN-303C
VT750C Shadow A.C.E.	750	HA-7500	KN-303
		HA-7500	KN-303C
VT750CD Shadow Deluxe	750	HA-7500	KN-303
		HA-7500	KN-303C
VT1100C Shadow Spirit	1100	HA-1187	KN-303
		HA-1187	KN-303C
2000 HONDA			
VT1100C2 Shadow Sabre	1100	HA-1187	KN-303
		HA-1187	KN-303C
VT1100C3 Shadow Aero	1100	HA-1187	KN-303
		HA-1187	KN-303C
VT1100T Shadow A.C.E. Tourer	1100	HA-1187	KN-303
		HA-1187	KN-303C
VTR1000 Firestorm	1000	HA-0011	KN-303
		HA-0011	KN-303C
VTR1000 SP-1	1000	HA-5100	KN-303
		HA-5100	KN-303C
VTR1000 Super Hawk	1000	HA-0011	KN-204
		HA-0011	KN-204C
XL650V Transalp	650	HA-6501	KN-303
		HA-6501	KN-303C
XL1000 Varadero	1000	HA-0011	KN-303
		HA-0011	KN-303C
XR80R	80	HA-1088	
XR100R	100	HA-1088	
XR200R	200	HA-2584	
XR250R	250	HA-1312	KN-112
XR400R	400	HA-1314	KN-112
XR600R	600	HA-1315	KN-112
XR650L	650	HA-6592	KN-112
XR650R	650	HA-6500	KN-112
XRV750 Africa Twin	742	HA-0008	KN-303
		HA-0008	KN-303C
1999 HONDA			
Accord	2.3L L4 F/I	33-2124	HP-1004
Accord	3.0L V6 F/I	33-2133 ♦	HP-1004
Accord VII	1.8L L4 F/I	33-2124	
Accord VII	2.0L L4 F/I	33-2124	
Accord VII	2.2L L4 F/I	33-2124 ♦	
Accord VII	3.0L V6 F/I	33-2133	HP-1004
CB400 VTEC	400	HA-4098	
CB600 Hornet	600	HA-6098	KN-303
		HA-6098	KN-303C
CB750 Nighthawk	750	HA-7591	KN-303
		HA-7591	KN-303C
CB1100SF	1100	HA-1199	KN-303
		HA-1199	KN-303C
CBR600F4	600	HA-6099	KN-303
		HA-6099	KN-303C
CBR900RR	900	HA-9092-A	KN-303
		HA-9092-A	KN-303C
CBR1100XX Blackbird	1100	HA-1199	KN-303
		HA-1199	KN-303C
Civic CX	1.6L L4 F/I	33-2120	HP-1004
Civic DX	1.6L L4 F/I	33-2120	HP-1004
Civic EX	1.6L L4 F/I	33-2104 ♦	HP-1004
Civic GX	1.6L L4 F/I	33-2104	HP-1004
Civic HX	1.6L L4 F/I	33-2104	HP-1004
		33-2104 ♦	HP-1004
Civic LX	1.6L L4 F/I	33-2120	HP-1004
Civic Si	1.6L L4 F/I	33-2104 ♦	HP-1004
Civic V	1.4L L4 F/I - D14A3 Eng, D14A4 Eng.	33-2036 ♦	

*Indicates 2 filters required ♦ - Intake kit available - see page 80 Applications updated daily at knfilters.com

1999 HONDA

Vehicle	Engine Type	Air Filter	Oil Filter
Civic V	1.4L L4 F/I - D14A7 Eng., D14A8 Eng.	33-2047 ♦	
Civic V	1.5L L4 F/I - 3/4-Door	33-2104 ♦	
Civic V	1.5L L4 F/I - 5-door & AeroDeck	33-2047 ♦	
Civic V	1.6L L4 F/I - 105BHP	33-2036 ♦	
Civic V	1.6L L4 F/I - 114/160BHP	33-2104 ♦	
Civic V	1.6L L4 F/I - 116/125BHP	33-2047 ♦	
Civic V	1.8L L4 F/I	33-2234 ♦	
Civic V	2.0L L4 DSL	33-2761	
Civic Value Package	1.6L L4 F/I	33-2104	HP-1004
CN250 Helix	250	HA-2586	
CR125R	125	HA-2591	
CR250R	250	HA-2591	
CR-V	2.0L L4 F/I	33-2104	HP-1004
CR-V I	2.0L L4 F/I	33-2104	HP-1004
GL1500 Valkyrie Interstate	1520	HA-1596	KN-303
		HA-1596	KN-303C
GL1500A Gold Wing Aspencade	1520	HA-8088	KN-303
		HA-8088	KN-303C
GL1500C Valkyrie	1520	HA-1596	KN-303
		HA-1596	KN-303C
GL1500CT Valkyrie Tourer	1520	HA-1596	KN-303
		HA-1596	KN-303C
GL1500SE Gold Wing SE	1520	HA-8088	KN-303
		HA-8088	KN-303C
Integra Type R	1.8L L4 F/I	E-2427	
Legend	3.5L V6 F/I	33-2179	
Odyssey	3.5L V6 F/I	33-2174	HP-1004
Passport	3.2L V6 F/I	33-2108	HP-1004
Prelude	2.2L L4 F/I	33-2090 ♦	HP-1004
Prelude V	2.0L L4 F/I	33-2090	
Prelude V	2.2L L4 F/I	33-2090	HP-1004
S2000	2.0L L4 F/I	E-2435 ♦	HP-1004
ST1100	1100	HA-1191	KN-303
		HA-1191	KN-303C
ST1100 ABS II	1100	HA-1191	KN-303
		HA-1191	KN-303C
ST1100 Pan European	1100		KN-303
			KN-303C
TRX250 Recon	250	HA-2597	
TRX300 Fourtrax	280	HA-3098	KN-113
TRX300EX	300	HA-3094	KN-113
TRX300FW Fourtrax 4x4	300	HA-3098	KN-113
TRX400EX	397	HA-4099	KN-113
TRX400FW Foreman 4x4	395	HA-3098	KN-113
TRX450ES Foreman ES	433	HA-3098	KN-113
TRX450S Foreman S	450	HA-3098	KN-113
VF750C Magna	739	HA-7594	KN-303
		HA-7594	KN-303C
VF750C2 Magna Deluxe	750	HA-7594	KN-303
		HA-7594	KN-303C

1999 HONDA

Vehicle	Engine Type	Air Filter	Oil Filter
VFR800F Interceptor	800	HA-8098	KN-303
		HA-8098	KN-303C
VT600C Shadow VLX	600	HA-6199	KN-303
		HA-6199	KN-303C
VT600CD Shadow VLX Deluxe	600	HA-6199	KN-303
		HA-6199	KN-303C
VT750C Shadow	750		KN-303
			KN-303C
VT750C Shadow A.C.E.	750	HA-7500	KN-303
		HA-7500	KN-303C
VT750CD Shadow Deluxe	750	HA-7500	KN-303
		HA-7500	KN-303C
VT1100C Shadow Spirit	1100	HA-1187	KN-303
		HA-1187	KN-303C
VT1100C2 Shadow A.C.E.	1100	HA-1187	KN-303
		HA-1187	KN-303C
VT1100C3 Shadow Aero	1100	HA-1187	KN-303
		HA-1187	KN-303C
VT1100D2 Shadow A.C.E.	1100	HA-1187	KN-303
		HA-1187	KN-303C
VT1100T Shadow A.C.E. Tourer	1100	HA-1187	KN-303
		HA-1187	KN-303C
VTR1000 Firestorm	1000	HA-0011	KN-303
		HA-0011	KN-303C
VTR1000 Super Hawk	1000	HA-0011	KN-204
		HA-0011	KN-204C
XR100R	100	HA-1088	
XR200R	200	HA-2584	
XR250R	250	HA-1312	KN-112
XR400R	400	HA-1314	KN-112
XR600R	600	HA-1315	KN-112
XR650L	650	HA-6592	KN-112

1998 HONDA

Vehicle	Engine Type	Air Filter	Oil Filter
Accord	2.3L L4 F/I - Non-US	33-2613	
Accord	2.3L L4 F/I - US	33-2124	HP-1004
Accord	3.0L V6 F/I	33-2133	HP-1004
Accord V	2.0L L4 F/I - F20B Eng.	33-2071 ♦	
Accord V	2.0L L4 F/I - F20Z Eng.	33-2613 ♦	
Accord V	2.2L L4 F/I	33-2071	HP-1004
Accord VI	1.8L L4 F/I	33-2613	
Accord VI	2.0L L4 DSL	33-2761	
Accord VI	2.0L L4 F/I	33-2613 ♦	
Accord VI	2.2L L4 F/I	33-2613	HP-1004
Accord VII	1.8L L4 F/I	33-2124	
Accord VII	2.0L L4 F/I	33-2124	
Accord VII	2.2L L4 F/I	33-2124 ♦	
Accord VII	3.0L V6 F/I	33-2133	HP-1004
CB400 VTEC	400	HA-4098	KN-113
CB750 Nighthawk	750	HA-7591	KN-303

*Indicates 2 filters required ♦ - Intake kit available - see page 80 Applications updated daily at knfilters.com

Vehicle	Engine Type	Air Filter	Oil Filter
1998 HONDA			
CB750 Nighthawk	750	HA-7591	KN-303C
CBR600F3	600	HA-6095	KN-303
		HA-6095	KN-303C
CBR900RR	900	HA-9092-A	KN-303
		HA-9092-A	KN-303C
CBR1100XX Blackbird	1100	HA-1197	KN-303
		HA-1197	KN-303C
Civic CX	1.6L L4 F/I	33-2120	HP-1004
Civic del Sol	1.6L L4 F/I	33-2047	
Civic DX	1.6L L4 F/I	33-2120	HP-1004
Civic EX	1.6L L4 F/I	33-2104 ♦	HP-1004
Civic GX	1.6L L4 F/I	33-2104	HP-1004
Civic HX	1.6L L4 F/I	33-2104	HP-1004
		33-2104 ♦	HP-1004
Civic LX	1.6L L4 F/I	33-2120	HP-1004
Civic Si	1.6L L4 F/I	33-2104	HP-1004
Civic V	1.4L L4 F/I - D14A3 Eng, D14A4 Eng.	33-2036 ♦	
Civic V	1.4L L4 F/I - D14A7 Eng., D14A8 Eng.	33-2047 ♦	
Civic V	1.5L L4 F/I - 3/4-Door	33-2104 ♦	
Civic V	1.5L L4 F/I - 5-door & AeroDeck	33-2047 ♦	
Civic V	1.6L L4 F/I - 105BHP	33-2036 ♦	
Civic V	1.6L L4 F/I - 114/160BHP	33-2104 ♦	
Civic V	1.6L L4 F/I - 116/125BHP	33-2047 ♦	
Civic V	1.8L L4 F/I	33-2234 ♦	
Civic V	2.0L L4 DSL	33-2761	
CR125R	125	HA-2591	
CR250R	250	HA-2591	
CR500R	500	HA-2591	
CR-V	2.0L L4 F/I	33-2104	HP-1004
CR-V I	2.0L L4 F/I	33-2104	HP-1004
GL1500A Gold Wing Aspencade	1520	HA-8088	KN-303
		HA-8088	KN-303C
GL1500C Valkyrie	1520	HA-1596	KN-303
		HA-1596	KN-303C
GL1500CT Valkyrie Tourer	1520	HA-1596	KN-303
		HA-1596	KN-303C
GL1500SE Gold Wing SE	1520	HA-8088	KN-303
		HA-8088	KN-303C
Integra Type R	1.8L L4 F/I	E-2427	
Legend	3.5L V6 F/I	33-2179	
Odyssey	2.3L L4 F/I	33-2071	HP-1004
Passport	3.2L V6 F/I	33-2108	HP-1004
PC800 Pacific Coast	800	HA-8089	KN-303
		HA-8089	KN-303C
Prelude	2.2L L4 F/I	33-2090 ♦	HP-1004
Prelude V	2.0L L4 F/I	33-2090	
Prelude V	2.2L L4 F/I	33-2090	HP-1004
ST1100	1100	HA-1191	KN-303
		HA-1191	KN-303C
ST1100 ABS II	1100	HA-1191	KN-303
		HA-1191	KN-303C
ST1100 Pan European	1100		KN-303
			KN-303C

Vehicle	Engine Type	Air Filter	Oil Filter
1998 HONDA			
TRX250 Recon	225	HA-2597	
TRX300 Fourtrax	280	HA-3098	KN-113
TRX300EX	300	HA-3094	KN-113
TRX300FW Fourtrax 4x4	300	HA-3098	KN-113
TRX400FW Foreman 4x4	395	HA-3098	KN-113
TRX450ES Foreman ES	433	HA-3098	KN-113
TRX450S Foreman S	450	HA-3098	KN-113
VF750C Magna	739	HA-7594	KN-303
		HA-7594	KN-303C
VF750C2 Magna Deluxe	750	HA-7594	KN-303
		HA-7594	KN-303C
VFR800F Interceptor	800	HA-8098	KN-303
		HA-8098	KN-303C
VT600C Shadow VLX	600	HA-6088	KN-303
		HA-6088	KN-303C
VT600CD Shadow VLX Deluxe	600	HA-6088	KN-303
		HA-6088	KN-303C
VT750C Shadow A.C.E.	750	HA-7500	KN-303
		HA-7500	KN-303C
VT750CD Shadow Deluxe	750	HA-7500	KN-303
		HA-7500	KN-303C
VT1100C Shadow	1100	HA-1187	KN-303
		HA-1187	KN-303C
VT1100C Shadow Spirit	1100	HA-1187	KN-303
		HA-1187	KN-303C
VT1100C2 Shadow A.C.E.	1100	HA-1187	KN-303
		HA-1187	KN-303C
VT1100C3 Shadow Aero	1100	HA-1187	KN-303
		HA-1187	KN-303C
VT1100T Shadow A.C.E. Tourer	1100	HA-1187	KN-303
		HA-1187	KN-303C
VTR1000 Firestorm	1000	HA-0011	KN-303
		HA-0011	KN-303C
VTR1000 Super Hawk	1000	HA-0011	KN-204
		HA-0011	KN-204C
XR80R	80	HA-1088	
XR100R	100	HA-1088	
XR200R	200	HA-2584	
XR250R	250	HA-1312	KN-112
XR400R	400	HA-1314	KN-112
XR600R	600	HA-1315	KN-112
XR650L	650	HA-6592	KN-112
1997 HONDA			
Accord	2.2L L4 F/I		HP-1004
Accord	2.2L L4 F/I - US	33-2071 ♦	HP-1004
Accord	2.3L L4 F/I	33-2071	
Accord	2.7L V6 F/I	33-2100	HP-1004

*Indicates 2 filters required ♦ - Intake kit available - see page 80 Applications updated daily at knfilters.com

Vehicle	Engine Type	Air Filter	Oil Filter
1997 HONDA			
Accord V	2.0L L4 F/I - F20B Eng.	33-2071 ♦	
Accord V	2.0L L4 F/I - F20Z Eng.	33-2613 ♦	
Accord V	2.2L L4 F/I	33-2071 ♦	HP-1004
Accord VI	1.8L L4 F/I	33-2613	
Accord VI	2.0L L4 DSL	33-2761	
Accord VI	2.0L L4 F/I	33-2613 ♦	
Accord VI	2.2L L4 F/I	33-2613 ♦	
CB750 Nighthawk	750	HA-7591	KN-303
		HA-7591	KN-303C
CB1000 Big One	1006	HA-1013-1	KN-303
		HA-1013-1	KN-303C
CBR600F3	600	HA-6095	KN-303
		HA-6095	KN-303C
CBR900RR	900	HA-9092-A	KN-303
		HA-9092-A	KN-303C
CBR1100XX Blackbird	1100	HA-1197	KN-303
		HA-1197	KN-303C
Civic CX	1.6L L4 F/I	33-2120	HP-1004
Civic del Sol	1.6L L4 F/I	33-2047	HP-1004
Civic DX	1.6L L4 F/I	33-2120	HP-1004
Civic EX	1.6L L4 F/I	33-2104 ♦	HP-1004
Civic HX	1.6L L4 F/I	33-2104	HP-1004
		33-2104 ♦	HP-1004
Civic IV	1.4L L4 F/I	33-2047	
Civic IV	1.6L L4 F/I	33-2047 ♦	
Civic LX	1.6L L4 F/I	33-2120	HP-1004
Civic Si	1.6L L4 F/I	33-2104	HP-1004
Civic V	1.4L L4 F/I - D14A3 Eng, D14A4 Eng.	33-2036 ♦	
Civic V	1.4L L4 F/I - D14A7 Eng., D14A8 Eng.	33-2047 ♦	
Civic V	1.5L L4 F/I - 3/4-Door	33-2104 ♦	
Civic V	1.5L L4 F/I - 5-door & AeroDeck	33-2047 ♦	
Civic V	1.6L L4 F/I - 105BHP	33-2036 ♦	
Civic V	1.6L L4 F/I - 114/160BHP	33-2104 ♦	
Civic V	1.6L L4 F/I - 116/125BHP	33-2047 ♦	
Civic V	1.8L L4 F/I	33-2234 ♦	
Civic V	2.0L L4 DSL	33-2761	
CN250 Helix	250	HA-2586	
CR125R	125	HA-2591	
CR250R	250	HA-2591	
CR500R	500	HA-2591	
CR-V	2.0L L4 F/I	33-2104	HP-1004
CR-V I	2.0L L4 F/I	33-2104	HP-1004
CRX III	1.6L L4 F/I	33-2047 ♦	
GL1500A Gold Wing Aspencade	1520	HA-8088	KN-303
		HA-8088	KN-303C
GL1500C Valkyrie	1520	HA-1596	KN-303
		HA-1596	KN-303C
GL1500CT Valkyrie Tourer	1520	HA-1596	KN-303
		HA-1596	KN-303C
GL1500SE Gold Wing SE	1520	HA-8088	KN-303
		HA-8088	KN-303C
Odyssey	2.2L L4 F/I	33-2071	HP-1004
Passport	3.2L V6 F/I	33-2108	HP-1004
PC800 Pacific Coast	800	HA-8089	KN-303
		HA-8089	KN-303C

Vehicle	Engine Type	Air Filter	Oil Filter
1997 HONDA			
Prelude	2.2L L4 F/I	33-2090 ♦	HP-1004
Prelude V	2.0L L4 F/I	33-2090	
Prelude V	2.2L L4 F/I	33-2090	HP-1004
ST1100	1100	HA-1191	KN-303
		HA-1191	KN-303C
ST1100 ABS II	1100		KN-303
			KN-303C
ST1100 Pan European	1100		KN-303
			KN-303C
TRX200D Fourtrax	199	HA-2090	KN-113
TRX250 Recon	225	HA-2597	
TRX300 Fourtrax	280	HA-3093	KN-113
TRX300EX	300	HA-3094	KN-113
TRX300FW Fourtrax 4x4	300	HA-3093	KN-113
TRX400FW Foreman 4x4	395	HA-3093	KN-113
VF750C Magna	739	HA-7594	KN-303
		HA-7594	KN-303C
VF750C2 Magna Deluxe	750	HA-7594	KN-303
		HA-7594	KN-303C
VFR750F Interceptor	739	HA-0003	KN-303
		HA-0003	KN-303C
VT600C Shadow VLX	600	HA-6088	KN-303
		HA-6088	KN-303C
VT600CD Shadow VLX Deluxe	600	HA-6088	KN-303
		HA-6088	KN-303C
VT750C Shadow	750		KN-303
			KN-303C
VT1100C Shadow	1100	HA-1187	KN-303
		HA-1187	KN-303C
VT1100C Shadow Spirit	1100	HA-1187	KN-303
		HA-1187	KN-303C
VT1100C2 Shadow A.C.E.	1100	HA-1187	KN-303
		HA-1187	KN-303C
XR100R	100	HA-1088	
XR200R	200	HA-2584	
XR250R	250	HA-1312	KN-112
XR400R	400	HA-1314	KN-112
XR600R	600	HA-1315	KN-112
XR650L	650	HA-6592	KN-112
1996 HONDA			
Accord	2.2L L4 F/I		HP-1004
Accord	2.2L L4 F/I - US	33-2071 ♦	HP-1004
Accord	2.7L V6 F/I	33-2100	HP-1004
Accord V	2.0L L4 F/I - F20B Eng.	33-2071 ♦	
Accord V	2.0L L4 F/I - F20Z Eng.	33-2613 ♦	
Accord V	2.2L L4 F/I	33-2071 ♦	HP-1004
Accord V	2.3L L4 F/I	33-2613	
Accord VI	1.8L L4 F/I	33-2613	
Accord VI	2.0L L4 DSL	33-2761	
Accord VI	2.0L L4 F/I	33-2613 ♦	
Accord VI	2.2L L4 F/I	33-2613 ♦	HP-1004
CB500	502	HA-5094	KN-303
		HA-5094	KN-303C
CB750 Nighthawk	750	HA-7591	KN-303

*Indicates 2 filters required ♦ - Intake kit available - see page 80 Applications updated daily at knfilters.com

Vehicle	Engine Type	Air Filter	Oil Filter
1996 HONDA			
CB750 Nighthawk	750	HA-7591	KN-303C
CB1000 Big One	1006	HA-1013-1	KN-303
		HA-1013-1	KN-303C
CBR600F3	600	HA-6095	KN-303
		HA-6095	KN-303C
CBR900RR	900	HA-9092-A	KN-303
		HA-9092-A	KN-303C
CBR1000F	1006	HA-1087	KN-303
		HA-1087	KN-303C
CBR1100XX Blackbird	1100	HA-1197	KN-303
		HA-1197	KN-303C
Civic CX	1.6L L4 F/I	33-2120	HP-1004
Civic del Sol	1.6L L4 F/I	33-2047	HP-1004
Civic DX	1.6L L4 F/I	33-2120	HP-1004
Civic EX	1.6L L4 F/I	33-2120 ♦	HP-1004
Civic HX	1.6L L4 F/I	33-2104	HP-1004
		33-2104 ♦	HP-1004
Civic IV	1.4L L4 F/I	33-2047	
Civic IV	1.6L L4 F/I	33-2047 ♦	
Civic LX	1.6L L4 F/I	33-2120	HP-1004
Civic Si	1.6L L4 F/I	33-2104	HP-1004
Civic V	1.4L L4 F/I	33-2036 ♦	
Civic V	1.5L L4 F/I	33-2104 ♦	
Civic V	1.6L L4 F/I - 105BHP	33-2036 ♦	
Civic V	1.6L L4 F/I - 114/160BHP	33-2104 ♦	
Civic V	1.6L L4 F/I - 116/125BHP	33-2047 ♦	
CN250 Helix	250	HA-2586	
CR125R	125	HA-2591	
CR250R	250	HA-2591	
CR-V I	2.0L L4 F/I	33-2104	
GL1500A Gold Wing Aspencade	1520	HA-8088	KN-303
		HA-8088	KN-303C
GL1500i Gold Wing Interstate	1520	HA-8088	KN-303
		HA-8088	KN-303C
GL1500SE Gold Wing SE	1520	HA-8088	KN-303
		HA-8088	KN-303C
Odyssey	2.2L L4 F/I	33-2071	HP-1004
Passport	3.2L V6 F/I	33-2108	HP-1004
PC800 Pacific Coast	800	HA-8089	KN-303
		HA-8089	KN-303C
Prelude	2.2L L4 F/I	33-2090 ♦	HP-1004
Prelude	2.3L L4 F/I	33-2090	HP-1004
Prelude IV	2.0L L4 F/I	33-2090	
Prelude IV	2.2L L4 F/I	33-2090 ♦	HP-1004
Prelude IV	2.3L L4 F/I	33-2090 ♦	HP-1004
Prelude V	2.0L L4 F/I	33-2090	
Prelude V	2.2L L4 F/I	33-2090	HP-1004
ST1100	1100	HA-1191	KN-303
		HA-1191	KN-303C
ST1100 ABS II	1100		KN-303
			KN-303C
ST1100 Pan European	1100		KN-303
			KN-303C
TRX200D Fourtrax	199	HA-2090	KN-113
TRX300 Fourtrax	280	HA-3093	KN-113
1996 HONDA			
TRX300EX	300	HA-3094	KN-113
TRX300FW Fourtrax 4x4	300	HA-3093	KN-113
TRX400FW Foreman 4x4	395	HA-3093	KN-113
VF750C Magna	739	HA-7594	KN-303
		HA-7594	KN-303C
VF750CD Magna Deluxe	750	HA-7594	KN-303
		HA-7594	KN-303C
VFR750F Interceptor	739	HA-0003	KN-303
		HA-0003	KN-303C
VT600C Shadow VLX	600	HA-6088	KN-303
		HA-6088	KN-303C
VT600CD Shadow VLX Deluxe	600	HA-6088	KN-303
		HA-6088	KN-303C
VT1100C Shadow	1100	HA-1187	KN-303
		HA-1187	KN-303C
VT1100C2 Shadow A.C.E.	1100	HA-1187	KN-303
		HA-1187	KN-303C
XR100R	100	HA-1088	
XR200R	200	HA-2584	
XR250L	250	HA-1312	KN-112
XR250R	250	HA-1312	KN-112
XR400R	400	HA-1314	KN-112
XR600R	600	HA-1315	KN-112
XR650L	650	HA-6592	KN-112
XRV750 Africa Twin	742	HA-0008	KN-303
		HA-0008	KN-303C
1995 HONDA			
Accord	2.2L L4 F/I	33-2071 ♦	HP-1004
Accord	2.7L V6 F/I	33-2100	HP-1004
Accord EX	2.2L L4 F/I	33-2071	HP-1004
Accord V	2.0L L4 F/I - F20B Eng.	33-2071 ♦	
Accord V	2.0L L4 F/I - F20Z Eng.	33-2613 ♦	
Accord V	2.2L L4 F/I	33-2071	HP-1004
Accord V	2.3L L4 F/I	33-2613	
CB750 Nighthawk	750	HA-7591	KN-303
		HA-7591	KN-303C
CB1000 Big One	1006	HA-1013-1	KN-303
		HA-1013-1	KN-303C
CBR600F3	600	HA-6095	KN-303
		HA-6095	KN-303C
CBR900RR	900	HA-9092-A	KN-303
		HA-9092-A	KN-303C
CBR1000F	1006	HA-1087	KN-303
		HA-1087	KN-303C
Civic Coupe	1.6L L4 F/I	33-2047	
Civic Coupe	1.6L L4 F/I - 105BHP, D16Y7 Eng.	33-2036	
Civic CX	1.5L L4 F/I		HP-1004
Civic CX	1.5L L4 F/I - US	33-2047	HP-1004
Civic del Sol	1.5L L4 F/I	33-2047 ♦	HP-1004
Civic del Sol	1.6L L4 F/I	33-2047 ♦	HP-1004
Civic DX	1.5L L4 F/I		HP-1004
Civic DX	1.5L L4 F/I - US	33-2047 ♦	HP-1004
Civic DX Hatchback	1.5L L4 F/I		HP-1004
Civic DX Hatchback	1.5L L4 F/I - US	33-2047 ♦	HP-1004
Civic EX	1.6L L4 F/I	33-2047 ♦	HP-1004
Civic II	1.6L L4 F/I	33-2025	

*Indicates 2 filters required ♦ - Intake kit available - see page 80 Applications updated daily at knfilters.com

Vehicle	Engine Type	Air Filter	Oil Filter
1995 HONDA			
Civic IV	1.3L L4 F/I	E-2980	
Civic IV	1.4L L4 F/I	33-2047	
Civic IV	1.5L L4 F/I	33-2047 ♦	
Civic IV	1.6L L4 F/I	33-2047 ♦	
Civic LX	1.5L L4 F/I		HP-1004
Civic LX	1.5L L4 F/I - US	33-2047 ♦	HP-1004
Civic Si	1.6L L4 F/I	33-2047 ♦	HP-1004
Civic V	1.4L L4 F/I	33-2036 ♦	
Civic V	1.5L L4 F/I	33-2104 ♦	
Civic V	1.6L L4 F/I - 105BHP	33-2036 ♦	
Civic V	1.6L L4 F/I - 114/160BHP	33-2104 ♦	
Civic V	1.6L L4 F/I - 116/125BHP	33-2047 ♦	
Civic VX	1.5L L4 F/I		HP-1004
Civic VX	1.5L L4 F/I - US	33-2047	HP-1004
CR125R	125	HA-2591	
CR250R	250	HA-2591	
GL1500A Gold Wing Aspencade	1520	HA-8088	KN-303
		HA-8088	KN-303C
GL1500i Gold Wing Interstate	1520	HA-8088	KN-303
		HA-8088	KN-303C
GL1500SE Gold Wing SE	1520	HA-8088	KN-303
		HA-8088	KN-303C
Odyssey	2.2L L4 F/I	33-2071	HP-1004
Passport	3.2L V6 F/I	33-2064	HP-1004
PC800 Pacific Coast	800	HA-8089	KN-303
		HA-8089	KN-303C
Prelude	2.2L L4 F/I	33-2090 ♦	HP-1004
Prelude	2.3L L4 F/I	33-2090	HP-1004
Prelude IV	2.0L L4 F/I	33-2090	
Prelude IV	2.2L L4 F/I	33-2090 ♦	HP-1004
Prelude IV	2.3L L4 F/I	33-2090 ♦	HP-1004
ST1100	1100	HA-1191	KN-303
		HA-1191	KN-303C
ST1100 A	1100		KN-303
			KN-303C
ST1100 ABS II	1100		KN-303
			KN-303C
ST1100 Pan European	1100		KN-303
			KN-303C
TRX200D Fourtrax	199	HA-2090	KN-113
TRX300 Fourtrax	280	HA-3093	KN-113
TRX300EX	300	HA-3094	KN-113
TRX300FW Fourtrax 4x4	300	HA-3093	KN-113
TRX400FW Foreman 4x4	395	HA-3093	KN-113
VF750C Magna	739	HA-7594	KN-303
		HA-7594	KN-303C
VF750CD Magna Deluxe	750	HA-7594	KN-303
		HA-7594	KN-303C
VFR750F Interceptor	739	HA-0003	KN-303
		HA-0003	KN-303C
VT600C Shadow VLX	600	HA-6088	KN-303
		HA-6088	KN-303C
VT600CD Shadow VLX Deluxe	600	HA-6088	KN-303
1995 HONDA			
VT600CD Shadow VLX Deluxe	600	HA-6088	KN-303C
VT1100C Shadow	1100	HA-1187	KN-303
		HA-1187	KN-303C
VT1100C2 Shadow A.C.E.	1100	HA-1187	KN-303
		HA-1187	KN-303C
XR200R	200	HA-2584	
XR250L	250	HA-1312	KN-112
XR250R	250	HA-1312	KN-112
XR600R	600	HA-1315	KN-112
XR650L	650	HA-6592	KN-112
1994 HONDA			
Accord	2.2L L4 F/I	33-2071 ♦	HP-1004
Accord EX	2.2L L4 F/I	33-2071	HP-1004
Accord V	2.0L L4 F/I - F20B Eng.	33-2071 ♦	
Accord V	2.0L L4 F/I - F20Z Eng.	33-2613 ♦	
Accord V	2.2L L4 F/I	33-2071	HP-1004
Accord V	2.3L L4 F/I	33-2613	
CB750 Nighthawk	750	HA-7591	KN-303
		HA-7591	KN-303C
CB1000 Big One	1006	HA-1013-1	KN-303
		HA-1013-1	KN-303C
CBR600 Hurricane	600		KN-303
			KN-303C
CBR600F2	600	HA-6091	KN-303
		HA-6091	KN-303C
CBR900RR	900	HA-9092-A	KN-303
		HA-9092-A	KN-303C
CBR1000F	1006	HA-1087	KN-303
		HA-1087	KN-303C
Civic CX	1.5L L4 F/I	33-2047 ♦	HP-1004
Civic del Sol	1.5L L4 F/I	33-2047 ♦	HP-1004
Civic del Sol	1.6L L4 F/I	33-2047 ♦	HP-1004
Civic DX	1.5L L4 F/I	33-2047 ♦	HP-1004
Civic DX Hatchback	1.5L L4 F/I	33-2047 ♦	HP-1004
Civic EX	1.6L L4 F/I	33-2047 ♦	HP-1004
Civic II	1.6L L4 F/I	33-2025	
Civic IV	1.3L L4 F/I	E-2980	
Civic IV	1.4L L4 F/I	33-2047	
Civic IV	1.5L L4 F/I	33-2047 ♦	
Civic IV	1.6L L4 F/I	33-2047 ♦	
Civic LX	1.5L L4 F/I	33-2047 ♦	HP-1004
Civic Si	1.6L L4 F/I	33-2047 ♦	HP-1004
Civic VX	1.5L L4 F/I	33-2047	HP-1004
CR250R	250	HA-2591	
GL1500A Gold Wing Aspencade	1520	HA-8088	KN-303
		HA-8088	KN-303C
GL1500i Gold Wing Interstate	1520	HA-8088	KN-303
		HA-8088	KN-303C
GL1500SE Gold Wing SE	1520	HA-8088	KN-303
		HA-8088	KN-303C
Passport	3.2L V6 F/I	33-2064	HP-1004
PC800 Pacific Coast	800	HA-8089	KN-303
		HA-8089	KN-303C
Prelude	2.2L L4 F/I	33-2090 ♦	HP-1004
Prelude	2.3L L4 F/I	33-2090	HP-1004
Prelude IV	2.0L L4 F/I	33-2090	

*Indicates 2 filters required ♦ - Intake kit available - see page 80 Applications updated daily at knfilters.com

1994 HONDA

Vehicle	Engine Type	Air Filter	Oil Filter
Prelude IV	2.2L L4 F/I	33-2090 ♦	HP-1004
Prelude IV	2.3L L4 F/I	33-2090 ♦	HP-1004
ST1100	1100	HA-1191	KN-303
		HA-1191	KN-303C
ST1100 A	1100		KN-303
			KN-303C
ST1100 ABS II	1100		KN-303
			KN-303C
ST1100 Pan European	1100		KN-303
			KN-303C
TRX300 Fourtrax	280	HA-3093	KN-113
TRX300EX	300	HA-3094	KN-113
TRX300FW Fourtrax 4x4	300	HA-3093	KN-113
VF750C Magna	739	HA-7594	KN-303
		HA-7594	KN-303C
VFR750F Interceptor	739	HA-0003	KN-303
		HA-0003	KN-303C
VT600C Shadow VLX	600	HA-6088	KN-303
		HA-6088	KN-303C
VT600CD Shadow VLX Deluxe	600	HA-6088	KN-303
		HA-6088	KN-303C
VT1100C Shadow	1100	HA-1187	KN-303
		HA-1187	KN-303C
VT1100CL Shadow	1100	HA-1187	KN-303
		HA-1187	KN-303C
XR250L	250	HA-1312	KN-112
XR250R	250	HA-1312	KN-112
XR600R	600	HA-1315	KN-112
XR650L	650	HA-6592	KN-112
XRV750 Africa Twin	742	HA-0008	KN-303
		HA-0008	KN-303C

1993 HONDA

Vehicle	Engine Type	Air Filter	Oil Filter
Accord	2.2L L4 F/I	33-2613	HP-1004
Accord IV	2.0L L4 F/I - 133BHP	33-2613	
Accord IV	2.0L L4 F/I - Exc., 133BHP	E-9180	
Accord IV	2.2L L4 F/I	33-2613	HP-1004
Accord V	2.0L L4 F/I - F20B Eng.	33-2071 ♦	
Accord V	2.0L L4 F/I - F20Z Eng.	33-2613 ♦	
Accord V	2.2L L4 F/I	33-2071	HP-1004
Accord V	2.3L L4 F/I	33-2613	
CB750 Nighthawk	750	HA-7591	KN-303
		HA-7591	KN-303C
CB1000 Big One	1006	HA-1013-1	KN-303
		HA-1013-1	KN-303C
CBR600F2	600	HA-6091	KN-303
		HA-6091	KN-303C
CBR900RR	900	HA-9092-A	KN-303
		HA-9092-A	KN-303C
CBR1000F	1006	HA-1087	KN-303
		HA-1087	KN-303C
Civic CX	1.5L L4 F/I	33-2047	HP-1004
Civic del Sol	1.5L L4 F/I	33-2047 ♦	HP-1004
Civic del Sol	1.6L L4 F/I	33-2047 ♦	HP-1004
Civic DX	1.5L L4 F/I	33-2047 ♦	HP-1004
Civic DX Hatchback	1.5L L4 F/I	33-2047 ♦	HP-1004
Civic EX	1.6L L4 F/I	33-2047 ♦	HP-1004
Civic II	1.6L L4 F/I	33-2025	
Civic IV	1.3L L4 F/I	E-2980	
Civic IV	1.5L L4 F/I	33-2047 ♦	

1993 HONDA

Vehicle	Engine Type	Air Filter	Oil Filter
Civic IV	1.6L L4 F/I	33-2047 ♦	
Civic LX	1.5L L4 F/I	33-2047 ♦	HP-1004
Civic Si	1.6L L4 F/I	33-2047 ♦	HP-1004
Civic VX	1.5L L4 F/I	33-2047	HP-1004
CN250 Helix	250	HA-2586	
CR125R	125	HA-2591	
CR250R	250	HA-2591	
CR500R	500	HA-2591	
GL1500 Gold Wing	1500		KN-303
			KN-303C
GL1500A Gold Wing Aspencade	1520	HA-8088	KN-303
		HA-8088	KN-303C
GL1500i Gold Wing Interstate	1520	HA-8088	KN-303
		HA-8088	KN-303C
GL1500SE Gold Wing SE	1520	HA-8088	KN-303
		HA-8088	KN-303C
Prelude	2.2L L4 F/I	33-2090 ♦	HP-1004
Prelude	2.3L L4 F/I	33-2090	HP-1004
Prelude IV	2.0L L4 F/I	33-2090	
Prelude IV	2.2L L4 F/I	33-2090 ♦	HP-1004
Prelude IV	2.3L L4 F/I	33-2090 ♦	HP-1004
ST1100	1100	HA-1191	KN-303
		HA-1191	KN-303C
ST1100 A	1100		KN-303
			KN-303C
ST1100 ABS II	1100		KN-303
			KN-303C
ST1100 Pan European	1100		KN-303
			KN-303C
TRX300 Fourtrax	280	HA-3093	KN-113
TRX300EX	300	HA-3094	KN-113
TRX300FW Fourtrax 4x4	300	HA-3093	KN-113
VFR750F Interceptor	739	HA-0003	KN-303
		HA-0003	KN-303C
VT600C Shadow VLX	600	HA-6088	KN-303
		HA-6088	KN-303C
VT600CD Shadow VLX Deluxe	600	HA-6088	KN-303
		HA-6088	KN-303C
VT1100C Shadow	1100	HA-1187	KN-303
		HA-1187	KN-303C
VT1100CL Shadow	1100	HA-1187	KN-303
		HA-1187	KN-303C
XR250L	250	HA-1312	KN-112
XR250R	250	HA-1312	KN-112
XR600R	600	HA-1315	KN-112
XR650L	650	HA-6592	KN-112
XRV750 Africa Twin	742	HA-0008	KN-303
		HA-0008	KN-303C

1992 HONDA

Vehicle	Engine Type	Air Filter	Oil Filter
Accord	2.2L L4 F/I	33-2613	HP-1004
Accord IV	2.0L L4 F/I - 133BHP	33-2613	
Accord IV	2.0L L4 F/I - Exc., 133BHP	E-9180	
Accord IV	2.2L L4 F/I	33-2613	HP-1004
CB750 Nighthawk	750	HA-7591	KN-303

*Indicates 2 filters required ♦ - Intake kit available - see page 80 Applications updated daily at knfilters.com

1992 HONDA

Vehicle	Engine Type	Air Filter	Oil Filter
CB750 Nighthawk	750	HA-7591	KN-303C
CBR600F2	600	HA-6091	KN-303
		HA-6091	KN-303C
Civic CX	1.5L L4 F/I	33-2047	HP-1004
Civic DX	1.5L L4 F/I	33-2047 ♦	HP-1004
Civic DX Hatchback	1.5L L4 F/I	33-2047 ♦	HP-1004
Civic EX	1.6L L4 F/I	33-2047 ♦	HP-1004
Civic II	1.6L L4 F/I	33-2025	
Civic IV	1.3L L4 F/I	E-2980	
Civic IV	1.5L L4 F/I	33-2047 ♦	
Civic IV	1.6L L4 F/I	33-2047 ♦	
Civic LX	1.5L L4 F/I	33-2047 ♦	HP-1004
Civic Si	1.6L L4 F/I	33-2047 ♦	HP-1004
Civic VX	1.5L L4 F/I	33-2047	HP-1004
CR250R	250	HA-2591	
GL1500 Gold Wing	1500		KN-303
			KN-303C
GL1500A Gold Wing Aspencade	1520	HA-8088	KN-303
		HA-8088	KN-303C
GL1500i Gold Wing Interstate	1520	HA-8088	KN-303
		HA-8088	KN-303C
GL1500SE Gold Wing SE	1520	HA-8088	KN-303
		HA-8088	KN-303C
Prelude	2.2L L4 F/I	33-2090	HP-1004
Prelude	2.3L L4 F/I	33-2090	HP-1004
Prelude III	2.0L L4 F/I - B20A1 Eng., B20A5 Eng.	33-2521	
Prelude III	2.0L L4 F/I - B20A9 Eng.	E-2425	
Prelude IV	2.0L L4 F/I	33-2090	
Prelude IV	2.2L L4 F/I	33-2090 ♦	HP-1004
Prelude IV	2.3L L4 F/I	33-2090 ♦	HP-1004
ST1100	1100	HA-1191	KN-303
		HA-1191	KN-303C
ST1100 A	1100		KN-303
			KN-303C
ST1100 ABS II	1100		KN-303
			KN-303C
ST1100 Pan European	1100		KN-303
			KN-303C
TRX250X Fourtrax	250	HA-2504	KN-112
TRX300 Fourtrax	280	HA-3093	KN-113
TRX300FW Fourtrax 4x4	300	HA-3093	KN-113
VFR750F Interceptor	739	HA-0003	KN-303
		HA-0003	KN-303C
VT600C Shadow VLX	600	HA-6088	KN-303
		HA-6088	KN-303C
VT1100C Shadow	1100	HA-1187	KN-303
		HA-1187	KN-303C

1991 HONDA

Vehicle	Engine Type	Air Filter	Oil Filter
Accord	2.2L L4 F/I	33-2613	HP-1004
Accord IV	2.0L L4 F/I - 133BHP	33-2613	
Accord IV	2.0L L4 F/I - Exc., 133BHP	E-9180	
Accord IV	2.2L L4 F/I	33-2613	HP-1004
CB400RR - NC29	400	HA-0004	KN-303
		HA-0004	KN-303C
CB750 Nighthawk	750	HA-7591	KN-303

1991 HONDA

Vehicle	Engine Type	Air Filter	Oil Filter
CB750 Nighthawk	750	HA-7591	KN-303C
CBR600F2	600	HA-6091	KN-303
		HA-6091	KN-303C
CBR1000F	1006	HA-1087	KN-303
		HA-1087	KN-303C
Civic	1.5L L4 F/I	33-2025 ♦	HP-1004
Civic	1.6L L4 F/I	33-2025 ♦	HP-1004
Civic II	1.4L L4 F/I	E-9071	
Civic II	1.5L L4 F/I	33-2025	
Civic II	1.6L L4 F/I	33-2025	
Civic III	1.3L L4 CARB	E-2980	
Civic III	1.5L L4 F/I	33-2025	
Civic III	1.6L L4 F/I - Exc., VTEC	33-2025 ♦	
Civic III	1.6L L4 F/I - VTEC	33-2061 ♦	
Civic IV	1.3L L4 F/I	E-2980	
Civic IV	1.5L L4 F/I	33-2047 ♦	
Civic IV	1.6L L4 F/I	33-2047 ♦	
CR125R	125	HA-2591	
CR250R	250	HA-2591	
CR500R	500	HA-2591	
CRX	1.5L L4 F/I	33-2025 ♦	HP-1004
CRX	1.6L L4 F/I		HP-1004
CRX	1.6L L4 F/I - US	33-2025 ♦	HP-1004
CRX HF	1.5L L4 F/I	33-2025	HP-1004
CRX II	1.6L L4 F/I		HP-1004
CRX II	1.6L L4 F/I - Exc., VTEC	33-2025 ♦	HP-1004
CRX II	1.6L L4 F/I - VTEC	33-2061 ♦	HP-1004
GL1500 Gold Wing	1500		KN-303
			KN-303C
GL1500A Gold Wing Aspencade	1520	HA-8088	KN-303
		HA-8088	KN-303C
GL1500i Gold Wing Interstate	1520	HA-8088	KN-303
		HA-8088	KN-303C
GL1500SE Gold Wing SE	1520	HA-8088	KN-303
		HA-8088	KN-303C
NT650 Hawk GT	650	HA-0005	KN-303
		HA-0005	KN-303C
Prelude	2.0L L4 F/I	E-2425	HP-1004
Prelude	2.1L L4 F/I		HP-1004
Prelude III	2.0L L4 F/I - B20A1 Eng., B20A5 Eng.	33-2521	
Prelude III	2.0L L4 F/I - B20A9 Eng.	E-2425	
ST1100	1100	HA-1191	KN-303
		HA-1191	KN-303C
ST1100 A	1100		KN-303
			KN-303C
ST1100 Pan European	1100		KN-303
			KN-303C
TRX250X Fourtrax	251	HA-2504	KN-112
TRX300 Fourtrax	280	HA-3093	KN-113
TRX300FW Fourtrax 4x4	300	HA-3093	KN-113
VFR400R - NC30	399		KN-303
			KN-303C
VFR750F Interceptor	739	HA-0003	KN-303
		HA-0003	KN-303C
VT600C Shadow VLX	600	HA-6088	KN-303

*Indicates 2 filters required ♦ - Intake kit available - see page 80 Applications updated daily at knfilters.com

Vehicle	Engine Type	Air Filter	Oil Filter
1991 HONDA			
VT600C Shadow VLX	600	HA-6088	KN-303C
XL250	250		KN-112
XL250 R Baja	250		KN-112
XR250L	250	HA-1312	KN-112
XR250R	250	HA-1312	KN-112
XR600R	600	HA-1315	KN-112
1990 HONDA			
Accord	2.2L L4 F/I	33-2613	HP-1004
Accord IV	2.0L L4 F/I - 133BHP	33-2613	
Accord IV	2.0L L4 F/I - Exc., 133BHP	E-9180	
Accord IV	2.2L L4 F/I	33-2613	HP-1004
CB400F CB-1	400		KN-303
			KN-303C
CBR600F	600	HA-6087	KN-303
		HA-6087	KN-303C
CBR1000F	1006	HA-1087	KN-303
		HA-1087	KN-303C
Civic	1.5L L4 F/I	33-2025 ♦	HP-1004
Civic	1.6L L4 F/I	33-2025 ♦	HP-1004
Civic II	1.4L L4 F/I	E-9071	
Civic II	1.5L L4 F/I	33-2025	
Civic II	1.6L L4 F/I	33-2025	
Civic III	1.3L L4 CARB	E-2980	
Civic III	1.4L L4 F/I	E-9071	
Civic III	1.5L L4 F/I	33-2025	
Civic III	1.6L L4 F/I - Exc., VTEC	33-2025 ♦	
Civic III	1.6L L4 F/I - VTEC	33-2061 ♦	
CR125R	125	HA-2591	
CR500R	500	HA-2591	
CR80R	82	HA-8086	
CRX	1.5L L4 F/I	33-2025 ♦	HP-1004
CRX	1.6L L4 F/I	33-2025 ♦	HP-1004
CRX HF	1.5L L4 F/I	33-2025	HP-1004
CRX II	1.6L L4 F/I		HP-1004
CRX II	1.6L L4 F/I - Exc., VTEC	33-2025 ♦	HP-1004
CRX II	1.6L L4 F/I - VTEC	33-2061 ♦	HP-1004
FL400R Pilot	400	HA-4400	
GB500	499		KN-112
GL1500 Gold Wing	1520	HA-8088	KN-303
		HA-8088	KN-303C
GL1500SE Gold Wing SE	1520	HA-8088	KN-303
		HA-8088	KN-303C
NT650 Hawk GT	650	HA-0005	KN-303
		HA-0005	KN-303C
PC800 Pacific Coast	792	HA-8089	KN-303
		HA-8089	KN-303C
Prelude	2.0L L4 CARB	E-2425	HP-1004
Prelude	2.0L L4 F/I	E-2425	HP-1004
Prelude	2.1L L4 F/I		HP-1004
Prelude III	2.0L L4 CARB		HP-1004
Prelude III	2.0L L4 F/I		HP-1004
Prelude III	2.0L L4 F/I - B20A1 Eng., B20A5 Eng.	33-2521	HP-1004
Prelude III	2.0L L4 F/I - B20A9 Eng.	E-2425	HP-1004
TRX250X Fourtrax	251		KN-113
TRX300 Fourtrax	280	HA-3093	KN-113
TRX300FW Fourtrax 4x4	300	HA-3093	KN-113
VFR400R - NC30	399		KN-303
			KN-303C

Vehicle	Engine Type	Air Filter	Oil Filter
1990 HONDA			
VFR750F Interceptor	739	HA-0003	KN-303
		HA-0003	KN-303C
VT1100C Shadow	1100	HA-1187	KN-303
		HA-1187	KN-303C
VTR250 Interceptor	250		KN-111
XL600V Transalp	583	HA-6089	KN-303
		HA-6089	KN-303C
XR250R	250	HA-1312	KN-112
1989 HONDA			
Accord	2.0L L4 CARB	E-9030	HP-1004
Accord	2.0L L4 F/I - US	33-2521	HP-1004
Accord III	2.0L L4 CARB	E-9030	
Accord III	2.0L L4 F/I	33-2521	
CB400F CB-1	400		KN-303
			KN-303C
CBR600F	600	HA-6087	KN-303
		HA-6087	KN-303C
Civic	1.5L L4 F/I	33-2025 ♦	HP-1004
Civic	1.6L L4 F/I	33-2025 ♦	HP-1004
Civic II	1.4L L4 F/I	E-9071	
Civic II	1.5L L4 F/I	33-2025	
Civic II	1.6L L4 F/I	33-2025	
Civic III	1.3L L4 CARB	E-2980	
Civic III	1.4L L4 F/I	E-9071	
Civic III	1.5L L4 F/I	33-2025	
Civic III	1.6L L4 F/I - Exc., VTEC	33-2025 ♦	
Civic III	1.6L L4 F/I - VTEC	33-2061 ♦	
CR500R	500	HA-2591	
CRX	1.5L L4 F/I	33-2025 ♦	HP-1004
CRX	1.6L L4 F/I	33-2025 ♦	HP-1004
CRX HF	1.5L L4 F/I	33-2025	HP-1004
CRX II	1.6L L4 F/I		HP-1004
CRX II	1.6L L4 F/I - Exc., VTEC	33-2025 ♦	HP-1004
CRX II	1.6L L4 F/I - VTEC	33-2061 ♦	HP-1004
FL400R Pilot	400	HA-4400	
GB500	500		KN-112
GL1500 Gold Wing	1520	HA-8088	KN-303
		HA-8088	KN-303C
NT650 Hawk GT	650	HA-0005	KN-303
		HA-0005	KN-303C
NX250	250		KN-112
PC800 Pacific Coast	800	HA-8089	KN-303
		HA-8089	KN-303C
Prelude	2.0L L4 CARB	E-2425	HP-1004
Prelude	2.0L L4 F/I	E-2425	HP-1004
Prelude III	2.0L L4 CARB		HP-1004
Prelude III	2.0L L4 F/I		HP-1004
Prelude III	2.0L L4 F/I - B20A1 Eng., B20A5 Eng.	33-2521	HP-1004
Prelude III	2.0L L4 F/I - B20A9 Eng.	E-2425	HP-1004
TRX250R Fourtrax	250	HA-4250	
TRX250X Fourtrax	250		KN-113
TRX300 Fourtrax	300	HA-3093	KN-113
TRX300FW Fourtrax 4x4	300	HA-3093	KN-113
TRX350D Foreman 4x4	350	HA-4435	KN-113
VFR750F Interceptor	750	HA-7587	KN-303
		HA-7587	KN-303C
VT600C Shadow VLX	600	HA-6088	KN-303
		HA-6088	KN-303C
VT1100C Shadow	1100	HA-1187	KN-303

*Indicates 2 filters required ♦ - Intake kit available - see page 80 Applications updated daily at knfilters.com

Vehicle	Engine Type	Air Filter	Oil Filter
1989 HONDA			
VT1100C Shadow	1100	HA-1187	KN-303C
VTR250 Interceptor	250		KN-111
XL600V Transalp	600	HA-6089	KN-303
		HA-6089	KN-303C
XR250R	250	HA-1312	KN-112
XR600R	600	HA-1315	KN-112
1988 HONDA			
Accord	2.0L L4 CARB	E-9030	HP-1004
Accord	2.0L L4 F/I	33-2521	HP-1004
Accord III	1.6L L4 CARB	E-9030	
Accord III	2.0L L4 CARB	E-9030	
Accord III	2.0L L4 F/I	33-2521	
CBR600F	600	HA-6087	KN-303
		HA-6087	KN-303C
CBR1000F	1062	HA-1087	KN-303
		HA-1087	KN-303C
Civic	1.5L L4 F/I	33-2025 ♦	HP-1004
Civic	1.6L L4 F/I	33-2025 ♦	HP-1004
Civic II	1.4L L4 F/I	E-9071	
Civic II	1.5L L4 F/I	33-2025	
Civic II	1.6L L4 F/I	33-2025	
Civic III	1.3L L4 CARB	E-2980	
Civic III	1.4L L4 F/I	E-9071	
Civic III	1.5L L4 F/I	33-2025	
Civic III	1.6L L4 F/I - Exc., VTEC	33-2025 ♦	
Civic III	1.6L L4 F/I - VTEC	33-2061 ♦	
CRX	1.5L L4 F/I	33-2025 ♦	HP-1004
CRX	1.6L L4 F/I	33-2025 ♦	HP-1004
CRX HF	1.5L L4 F/I	33-2025	HP-1004
CRX II	1.6L L4 F/I		HP-1004
CRX II	1.6L L4 F/I - Exc., VTEC	33-2025 ♦	HP-1004
GL1500 Gold Wing	1520	HA-8088	KN-303
		HA-8088	KN-303C
NT650 Hawk GT	650	HA-0005	KN-303
		HA-0005	KN-303C
NX250	250		KN-112
NX650 Dominator	650	HA-0001	KN-112
Prelude	2.0L L4 CARB		HP-1004
Prelude	2.0L L4 F/I	33-2521	HP-1004
Prelude III	2.0L L4 CARB		HP-1004
Prelude III	2.0L L4 F/I		HP-1004
Prelude III	2.0L L4 F/I - B20A1 Eng., B20A5 Eng.	33-2521	HP-1004
Prelude III	2.0L L4 F/I - B20A9 Eng.	E-2425	HP-1004
TRX125	125	HA-0510	
TRX200SX Fourtrax	200	HA-0510	
TRX250R Fourtrax	250	HA-4250	
TRX250X Fourtrax	250	HA-2504	KN-112
TRX300 Fourtrax	300	HA-3093	KN-113
TRX300FW Fourtrax 4x4	300	HA-3093	KN-113
TRX350D Foreman 4x4	350	HA-4435	KN-113
VF750C Magna	747	HA-7598	KN-202
VT600C Shadow VLX	600	HA-6088	KN-303
		HA-6088	KN-303C
VT800C Shadow	800		KN-202
VT1100C Shadow	1100	HA-1187	KN-202
VTR250 Interceptor	250		KN-111
1987 HONDA			
Accord	2.0L L4 CARB	E-9030	HP-1004
Accord	2.0L L4 F/I	33-2521	HP-1004

Vehicle	Engine Type	Air Filter	Oil Filter
1987 HONDA			
Accord III	1.6L L4 CARB	E-9030	
Accord III	2.0L L4 CARB	E-9030	
Accord III	2.0L L4 F/I	33-2521	
ATC250ES Big Red	250		KN-112
ATC250SX	250	HA-2410	KN-113
CBR600F	600	HA-6087	KN-303
		HA-6087	KN-303C
CBR1000F	1062	HA-1087	KN-303
		HA-1087	KN-303C
CBX250 RSE	250		KN-112
Civic	1.5L L4 CARB	E-2730	
Civic	1.5L L4 F/I	33-2021	
Civic I	1.5L L4 CARB	E-2730	
Civic I	1.5L L4 F/I	33-2021 ♦	
Civic II	1.5L L4 CARB	E-2730	
Civic II	1.5L L4 F/I	33-2021 ♦	
Civic III	1.5L L4 F/I	33-2025	
CMX450C Rebel	450		KN-111
CN250 Helix	250	HA-2586	
CRX	1.5L L4 3 BBL.	E-2730	
CRX	1.5L L4 3 BBL. - EW3 Eng.	E-2734	
CRX I	1.3L L4 CARB	E-2730	
CRX I	1.6L L4 F/I - Exc., VTEC, from 10/87	33-2025 ♦	
CRX I	1.6L L4 F/I - to 9/87	33-2021 ♦	
GL1200A Gold Wing Aspencade	1200	HA-8084	KN-401
GL1200i Gold Wing Interstate	1200	HA-8084	KN-401
Prelude	2.0L L4 F/I	33-2521	HP-1004
Prelude III	2.0L L4 CARB		HP-1004
Prelude III	2.0L L4 F/I		HP-1004
Prelude III	2.0L L4 F/I - B20A1 Eng., B20A5 Eng.	33-2521	HP-1004
Prelude III	2.0L L4 F/I - B20A9 Eng.	E-2425	HP-1004
TRX125	125	HA-0510	
TRX200SX Fourtrax	200	HA-0510	
TRX250	250		KN-113
TRX250 Fourtrax	250	HA-2410	KN-112
TRX250R Fourtrax	250	HA-4250	
TRX250X Fourtrax	250	HA-2504	KN-112
TRX350 Fourtrax 4x4	350	HA-4435	KN-113
TRX350D Foreman 4x4	350	HA-4435	KN-113
VF700C Magna	747	HA-7598	KN-202
VF750C Magna	750	HA-7598	KN-202
VFR700F Interceptor	700		KN-202
VFR700F2 Interceptor	700	HA-7587	KN-202
VT700C Shadow	700		KN-202
VT1100C Shadow	1100	HA-1187	KN-202
XL250	250		KN-112
XL600R	600		KN-112
XR200R	200	HA-2584	
XR250R	250	HA-1312	KN-112
XR600R	600	HA-1315	KN-112
1986 HONDA			
Accord	2.0L L4 CARB	E-9030	HP-1004
Accord	2.0L L4 F/I	33-2521	HP-1004
Accord III	2.0L L4 CARB	E-9030	
Accord III	2.0L L4 F/I	33-2521	
ATC200S	200	HA-0510	
ATC250ES Big Red	250		KN-112
ATC250R	250	HA-2440	

*Indicates 2 filters required ♦ - Intake kit available - see page 80 Applications updated daily at knfilters.com

1986 HONDA

Vehicle	Engine Type	Air Filter	Oil Filter
ATC250SX	250	HA-2410	KN-113
ATC350X	350	HA-3350	KN-113
CB450SC	450		KN-111
CB700SC Nighthawk S	700	HA-7084	KN-202
Civic	1.5L L4 CARB	E-2730	
Civic	1.5L L4 F/I	33-2021	
Civic I	1.5L L4 CARB	E-2730	
Civic II	1.5L L4 CARB	E-2730	
Civic II	1.5L L4 F/I	33-2021 ♦	
CMX450C Rebel	450		KN-111
CN250 Fusion	250	HA-2586	
CN250 Helix	250	HA-2586	
CRX I	1.3L L4 CARB	E-2730	
CRX I	1.5L L4 F/I	33-2021	
CRX I	1.6L L4 F/I	33-2021	
GL1200 Gold Wing	1200		KN-401
GL1200 Gold Wing SE-i	1200	HA-8085	KN-401
GL1200A Gold Wing Aspencade	1200	HA-8084	KN-401
GL1200i Gold Wing Interstate	1200	HA-8084	KN-401
Prelude	2.0L L4 F/I	33-2521	HP-1004
Prelude III	2.0L L4 F/I		HP-1004
Prelude III	2.0L L4 F/I - B20A1 Eng., B20A5 Eng.	33-2521	HP-1004
TRX125	125	HA-0510	
TRX200SX Fourtrax	200	HA-0510	
TRX250	250	HA-2410	KN-112
TRX250R	250	HA-4250	
TRX350 Fourtrax 4x4	350	HA-4435	KN-113
VF500F Interceptor	500	HA-3084	KN-202
VF700C Magna	700	HA-1210	KN-202
VF1000R	1000	HA-1250	KN-202
VF1100C V65 Magna	1100	HA-6583	KN-202
VFR700F Interceptor	700	HA-7587	KN-202
VFR700F2 Interceptor	700	HA-7587	KN-202
VFR750F Interceptor	750	HA-7587	KN-202
VT500C Shadow	500	HA-5083	KN-202
VT700C Shadow	700		KN-202
VT1100C Shadow	1100		KN-202
XL250	250		KN-112
XL350R	350		KN-112
XL600L	600		KN-112
XL600R	600		KN-112
XR200R	200	HA-2584	
XR250R	250	HA-1312	KN-112
XR600R	600	HA-1315	KN-112

1985 HONDA

Vehicle	Engine Type	Air Filter	Oil Filter
Accord	1.8L L4 CARB	E-2764	HP-1004
Accord	1.8L L4 F/I		HP-1004
Accord II	1.6L L4 CARB	E-2764	
Accord II	1.8L L4 CARB	E-2764	
Accord III	1.6L L4 CARB	E-9030	
ATC110	110	HA-0510	
ATC125M	125	HA-0510	
ATC200M	200	HA-0510	
ATC200S	200	HA-0510	
ATC200X	200	HA-2420	
ATC250ES Big Red	250		KN-112
ATC250R	250	HA-2440	
ATC250SX	250	HA-2410	KN-113
ATC350X	350	HA-3350	KN-113

1985 HONDA

Vehicle	Engine Type	Air Filter	Oil Filter
CB450NF	450		KN-111
CB450SC	450	HA-0850	KN-111
CB650SC Nighthawk	650	HA-5583	KN-401
CB700SC Nighthawk S	700	HA-7084	KN-202
CBX250 RSE	250		KN-112
Civic	1.5L L4 CARB	E-2730	
Civic	1.5L L4 F/I	33-2021	
Civic I	1.5L L4 CARB	E-2730	
Civic I	1.5L L4 F/I	33-2021 ♦	
Civic II	1.5L L4 CARB	E-2730	
Civic II	1.5L L4 F/I	33-2021 ♦	
CR250R	250	HA-1185	
CR500R	500	HA-1185	
CRX I	1.5L L4 F/I	33-2021	
FL350R Odyssey	350	HA-4350	
GL1200	1200		KN-401
GL1200 Gold Wing	1200		KN-401
GL1200A Gold Wing Aspencade	1200	HA-8084	KN-401
GL1200i Gold Wing Interstate	1200	HA-8084	KN-401
GL1200L Gold Wing Limited Edition	1200	HA-8085	KN-401
Prelude	1.8L L4 CARB	E-2925	HP-1004
Prelude II	1.8L L4 CARB	E-2925	HP-1004
TRX125	125	HA-0510	
TRX250	250	HA-2410	KN-112
VF500C V30 Magna	500	HA-3010	KN-202
VF500F Interceptor	500	HA-3084	KN-202
VF700C Magna	700	HA-1210	KN-202
VF700F Interceptor	700	HA-1245	KN-202
VF700S Sabre	700		KN-202
VF750	750		KN-202
VF1000F Interceptor	1000		KN-202
VF1000R	1000	HA-1250	KN-202
VF1100C V65 Magna	1062	HA-6583	KN-202
VF1100S Sabre	1062		KN-202
VT500C Shadow	500	HA-5083	KN-202
VT700C Shadow	700	HA-1326	KN-202
VT1100C Shadow	1100		KN-202
XL250	250		KN-112
XL350R	350		KN-112
XL600L	600		KN-112
XL600R	600		KN-112
XR80R	80	HA-1088	
XR100R	100	HA-1088	
XR200R	200	HA-2584	
XR250R	250	HA-2584	KN-112
XR350R	350	HA-1312	KN-112
XR600R	600	HA-1315	KN-112

1984 HONDA

Vehicle	Engine Type	Air Filter	Oil Filter
Accord	1.8L L4 CARB	E-2764	HP-1004
Accord II	1.8L L4 CARB	E-2764	
ATC110	110	HA-0510	
ATC125M	125	HA-0510	
ATC200ES Big Red	200	HA-0510	
ATC200M	200	HA-0510	
ATC200S	200	HA-0510	
ATC200X	200	HA-2420	
ATC250R	250	HA-2410	
CB650 SC	650		KN-401
CB650 SCC	650		KN-401
CB650SC Nighthawk	650	HA-5583	KN-401

*Indicates 2 filters required ♦ - Intake kit available - see page 80 Applications updated daily at knfilters.com

1984 HONDA

Vehicle	Engine Type	Air Filter	Oil Filter
CB700SC Nighthawk S	700	HA-7084	KN-202
CB750 F	750		KN-401
CBX750	750	HA-7591	KN-202
FL250 Odyssey	250	HA-1294	
GL1200 Gold Wing	1200	HA-8084	KN-401
GL1200A Gold Wing Aspencade	1200	HA-8084	KN-401
GL1200i Gold Wing Interstate	1200	HA-8084	KN-401
Prelude	1.8L L4 CARB	E-2925	HP-1004
Prelude II	1.8L L4 CARB	E-2925	HP-1004
VF500C V30 Magna	500	HA-3010	KN-202
VF500F Interceptor	500	HA-3084	KN-202
VF700C Magna	700	HA-1210	KN-202
VF700F Interceptor	700	HA-1245	KN-202
VF700S Sabre	700		KN-202
VF750	750		KN-202
VF750F V45 Interceptor	750	HA-1245	KN-202
VF1000F Interceptor	1000	HA-1250	KN-202
VF1100C V65 Magna	1062	HA-6583	KN-202
VF1100S Sabre	1062		KN-202
VT500C Shadow	500	HA-5083	KN-202
VT500FT Ascot	500	HA-5083	KN-202
VT700C Shadow	700	HA-1326	KN-202
XL250	250		KN-112
XL350R	350		KN-112
XL600R	600		KN-112
XR200R	200	HA-2584	
XR250R	250	HA-2584	KN-112
XR350R	350	HA-1312	KN-112
XR500	500		KN-112
XR500R	500	HA-1303	KN-112

1983 HONDA

Vehicle	Engine Type	Air Filter	Oil Filter
Accord	1.8L L4 CARB	E-2790	
Accord II	1.8L L4 CARB	E-2764	
ATC110	110	HA-0510	
ATC185S	185	HA-0510	
ATC200E Big Red	200	HA-0510	
ATC200X	200	HA-2420	
ATC250R	250	HA-2410	
CB450SC	450	HA-0850	KN-111
CB550SC Nighthawk	550	HA-5583	KN-401
CB650 SC	650		KN-401
CB650 SCC	650		KN-401
CB650SC Nighthawk	650	HA-5583	KN-401
CB750 F	750		KN-401
CB750SC Nighthawk	750	HA-1079	KN-401
CB1000C	1000	HA-1079	KN-401
CB1100F	1100	HA-1079	KN-401
Civic	1.3L L4 CARB	E-2740	
Civic	1.5L L4 CARB	E-2740	
Civic I	1.3L L4 CARB - Exc., 71BHP	E-2660	
Civic I	1.5L L4 CARB	E-2730	
Civic I	1.5L L4 F/I	33-2021 ♦	
Civic II	1.3L L4 CARB	E-2730	
Civic II	1.5L L4 CARB	E-2730	
Civic II	1.5L L4 F/I	33-2021 ♦	
CM250TB Custom	250		KN-111
CM450E	450	HA-0850	KN-111
CR125R	125	HA-1100	
CR480R	480	HA-1100	
CX650 ED Eurosport	650		KN-111

1983 HONDA

Vehicle	Engine Type	Air Filter	Oil Filter
CX650C Custom	650		KN-111
FL250 Odyssey	250	HA-1294	
GL650 Silver Wing	650		KN-111
GL650i Silver Wing Interstate	650	HA-0783	KN-111
GL1100 A Aspencade	1100		KN-401
GL1100 Gold Wing	1100	HA-8080	KN-401
Prelude	1.8L L4 CARB	E-2925	HP-1004
Prelude II	1.8L L4 CARB	E-2925	HP-1004
VF750C Magna	750	HA-1210	KN-202
VF750F V45 Interceptor	750	HA-1245	KN-202
VF750S Sabre	750		KN-202
VF1100C V65 Magna	1100	HA-6583	KN-202
VT500C Shadow	500	HA-5083	KN-202
VT500FT Ascot	500	HA-5083	KN-202
VT750C Shadow	750	HA-1326	KN-202
XL250 ProLink	250		KN-112
XL600L	600		KN-112
XL600R	600		KN-112
XR200R	200	HA-1050	
XR350R	350	HA-1312	KN-112
XR500	500		KN-112
XR500R	500	HA-1303	KN-112

1982 HONDA

Vehicle	Engine Type	Air Filter	Oil Filter
Accord	1.8L L4 CARB	E-2790	
ATC200E Big Red	200	HA-0510	
CB250 RSA	250		KN-111
CB250 RSD	250		KN-111
CB250 Superdream	250		KN-111
CB450SC	450	HA-0850	KN-111
CB550SC Nighthawk	550		KN-401
CB650	650	HA-7580	KN-401
CB650 SCC	650		KN-401
CB650C	650		KN-401
CB650SC Nighthawk	650	HA-7580	KN-401
CB750 F	750		KN-401
CB750C Custom	750	HA-1079	KN-401
CB750F Super Sport	750	HA-1079	KN-401
CB750K Four	750	HA-1079	KN-401
CB750SC Nighthawk	750	HA-1079	KN-401
CB900 F 900 Supersport	900		KN-401
CB900C	900	HA-1079	KN-401
CB900F	900	HA-1079	KN-401
CBX1000	1047	HA-0900	KN-401
CBX1000 ProLink	1000		KN-401
Civic	1.5L L4 CARB	E-2740	
CM250TB Custom	250		KN-111
CM450A Hondamatic	450	HA-0850	KN-111
CM450C Custom	450	HA-0850	KN-111
CM450E	450	HA-0850	KN-111
CX500	500		KN-111
CX500 EC Eurosport	500		KN-111
CX500C Custom	500	HA-0700	KN-111
CX500TC Turbo	500		KN-111
FL250 Odyssey	250	HA-1294	
GL500 Silver Wing	500		KN-111
GL500i Silver Wing Interstate	500	HA-0700	KN-111
GL1100 A Aspencade	1100		KN-401
GL1100 Gold Wing	1100	HA-8080	KN-401
VF750C Magna	750	HA-1210	KN-202
VF750S Sabre	750		KN-202

*Indicates 2 filters required ♦ - Intake kit available - see page 80 Applications updated daily at knfilters.com

Vehicle	Engine Type	Air Filter	Oil Filter
1982 HONDA			
XL250 ProLink	250		KN-112
XR200R	200	HA-1050	
XR250R	250	HA-1000	KN-112
XR500	500		KN-112
XR500R	500	HA-1000	KN-112
1981 HONDA			
CB400	400		KN-111
CB400 Hawk	400		KN-111
CB400A Hondamatic	400		KN-111
CB650	650	HA-7580	KN-401
CB650C	650	HA-7580	KN-401
CB650SC Nighthawk	650		KN-401
CB750 F	750		KN-401
CB750C Custom	750	HA-1079	KN-401
CB750F Super Sport	750	HA-1079	KN-401
CB750K Four	750	HA-1079	KN-401
CB900 F 900 Supersport	900		KN-401
CB900C	900	HA-1079	KN-401
CB900F	900	HA-1079	KN-401
CBX1000	1047	HA-0900	KN-401
CBX1000 ProLink	1000		KN-401
Civic	1.3L L4 CARB - US	E-2740	
Civic	1.5L L4 CARB	E-2740	
Civic I	1.3L L4 CARB - Exc., 71BHP	E-2660	
CM400A	400	HA-0850	KN-111
CM400C	400	HA-0850	KN-111
CM400E	400	HA-0850	KN-111
CM400T	400	HA-0850	KN-111
CX500	500		KN-111
CX500C Custom	500	HA-0700	KN-111
CX500D Deluxe	500	HA-0700	KN-111
FL250 Odyssey	250	HA-1294	
GL500 Silver Wing	500		KN-111
GL500i Silver Wing Interstate	500	HA-0700	KN-111
GL1100 Gold Wing	1100	HA-8080	KN-401
XR200R	200	HA-1050	
XR250R	250	HA-1000	
XR500	500		KN-112
XR500R	500	HA-1000	KN-112
1980 HONDA			
CB400 Hawk	400		KN-111
CB650	650	HA-0750	KN-401
CB650C	650	HA-7580	KN-401
CB650SC Nighthawk	650		KN-401
CB750 F	750		KN-401
CB750C Custom	750	HA-1079	KN-401
CB750F Super Sport	750	HA-1079	KN-401
CB750K Four	750	HA-1079	KN-401
CB900C	900	HA-1079	KN-401
CB900F	900		KN-401
CBX1000	1047	HA-0900	KN-401
CBX1000 ProLink	1000		KN-401
Civic	1.5L L4 CARB	E-2740	
CM400A	400	HA-0850	KN-111
CM400E	400	HA-0850	KN-111
CM400T	400	HA-0850	KN-111
CX500	500		KN-111
CX500C Custom	500	HA-0700	KN-111
CX500D Deluxe	500	HA-0700	KN-111
FL250 Odyssey	250	HA-1294	
GL1000 Gold Wing	1000		KN-401
1980 HONDA			
GL1100 Gold Wing	1100	HA-8080	KN-401
1979 HONDA			
CB400	400		KN-111
CB400 Hawk	400		KN-111
CB400 Super Dream	400		KN-111
CB400A Hondamatic	400		KN-111
CB400F	400		KN-401
CB650	650	HA-0750	KN-401
CB750 Limited Edition	750	HA-1079	KN-401
CB750F Super Sport	750	HA-1079	KN-401
CB750K Four	750	HA-1079	KN-401
CBX1000	1050	HA-0900	KN-401
CBX1000 ZA	1000		KN-401
CM400T	400	HA-0850	KN-111
CX500	500	HA-0700	KN-111
CX500C Custom	500	HA-0700	KN-111
CX500D Deluxe	500	HA-0700	KN-111
FL250 Odyssey	250	HA-1294	
GL1000 Gold Wing	1000	HA-0800	KN-401
1978 HONDA			
CB250	250		KN-111
CB400	400		KN-111
CB400 Hawk	400		KN-111
CB400 Super Dream	400		KN-111
CB400A Hondamatic	400		KN-111
CB400F	400		KN-401
CB550K	550		KN-401
CB750	750		KN-401
CB750A Hondamatic	750	HA-0100	KN-401
CB750F Super Sport	750	HA-0100	KN-401
CB750K Four	750	HA-0100	KN-401
CX500	500	HA-0700	KN-111
FL250 Odyssey	250	HA-1294	
GL1000 Gold Wing	1000	HA-0800	KN-401
XL100	100	HA-0300	
XR75 Mini	75	HA-0300	
1977 HONDA			
CB400F	400		KN-401
CB550F Super Sport	550		KN-401
CB550K	550		KN-401
CB750	750		KN-401
CB750A Hondamatic	750	HA-0100	KN-401
CB750F Super Sport	750	HA-0100	KN-401
CB750K Four	750	HA-0100	KN-401
GL1000 Gold Wing	1000	HA-0800	KN-401
XL100	100	HA-0300	
XR75 Mini	75	HA-0300	
1976 HONDA			
CB400F	400		KN-401
CB500 F Four	500		KN-401
CB500T	500		KN-111
CB550	550		KN-401
CB550F Super Sport	550		KN-401
CB550K	550		KN-401
CB750	750		KN-401
CB750A Hondamatic	750	HA-0100	KN-401
CB750F Super Sport	750	HA-0100	KN-401
CB750K Four	750	HA-0100	KN-401
GL1000 Gold Wing	1000	HA-0800	KN-401
XL100	100	HA-0300	
XR75 Mini	75	HA-0300	

*Indicates 2 filters required ♦ - Intake kit available - see page 80 Applications updated daily at knfilters.com

Vehicle	Engine Type	Air Filter	Oil Filter
1975 HONDA			
CB125	125	HA-0300	
CB400F	400		KN-401
CB500 F Four	500		KN-401
CB500T	500		KN-111
CB550	550		KN-401
CB550F Super Sport	550		KN-401
CB550K	550		KN-401
CB750	750		KN-401
CB750F Super Sport	750	HA-0100	KN-401
CB750K Four	750	HA-0100	KN-401
GL1000 Gold Wing	1000	HA-0800	KN-401
XL100	100	HA-0300	
XR75 Mini	75	HA-0300	
1974 HONDA			
CB125	125	HA-0300	
CB350F	350		KN-401
CB500 F Four	500		KN-401
CB500K	500		KN-401
CB550	550		KN-401
CB750	750	HA-0100	KN-401
XL100	100	HA-0300	
XR75 Mini	75	HA-0300	
1973 HONDA			
CB350F	350		KN-401
CB500 F Four	500		KN-401
CB500K	500		KN-401
CB750	750	HA-0100	KN-401
SL100	100	HA-0300	
SL125	125	HA-0300	
XR75 Mini	75	HA-0300	
1972 HONDA			
CB350F	350		KN-401
CB500 F Four	500		KN-401
CB500K	500		KN-401
CB750	750	HA-0100	KN-401
SL100	100	HA-0300	
SL125	125	HA-0300	
1971 HONDA			
CB100 Super Sport	100	HA-0300	
CB500K	500		KN-401
CB750	750	HA-0100	KN-401
CL100 Scrambler	100	HA-0300	
SL125	125	HA-0300	
1970 HONDA			
CB750	750	HA-0100	KN-401
CL100 Scrambler	100	HA-0300	
2010 HUMMER			
H2	6.2L V8 F/I		HP-1017
H3	3.7L L5 F/I	33-2408	HP-2006
H3	5.3L V8 F/I	33-2408	HP-1017
H3T	3.7L L5 F/I	33-2408	HP-2006
H3T	5.3L V8 F/I	33-2408	HP-1017
2009 HUMMER			
H2	6.2L V8 F/I		HP-1017
H3	3.7L L5 F/I	33-2408 ♦	HP-2006
H3	5.3L V8 F/I	33-2408	HP-1017
H3T	3.7L L5 F/I	33-2408 ♦	HP-2006
H3T	5.3L V8 F/I	33-2408	HP-1017
2008 HUMMER			
H2	6.2L V8 F/I		HP-1017
H3	3.5L L5 F/I	33-2408	
H3	3.7L L5 F/I	33-2408 ♦	HP-2006
H3	5.3L V8 F/I	33-2408	HP-1017
2007 HUMMER			
H2	6.0L V8 F/I	E-1985 ♦	HP-1017
H3	3.5L L5 F/I	E-0773	
H3	3.7L L5 F/I	E-0773 ♦	HP-2006
2006 HUMMER			
H1	6.6L V8 DSL		HP-3003
H2	6.0L V8 F/I		HP-1007
H3	3.5L L5 F/I	E-0773 ♦	HP-2006
2005 HUMMER			
H1	6.5L V8 DSL	E-1700	
H2	6.0L V8 F/I		HP-1007
H3	3.5L L5 F/I	E-0773	
2004 HUMMER			
H1	6.5L V8 DSL	E-1700	HP-3002
H2	6.0L V8 F/I		HP-1007
2003 HUMMER			
H1	6.5L V8 DSL	E-1700	HP-3002
H2	6.0L V8 F/I	E-1985 ♦	HP-1007
2002 HUMMER			
H1	6.5L V8 DSL	E-1700	HP-3002
H2	6.0L V8 F/I		HP-1007
2001 HUMMER			
H1	6.5L V8 DSL	E-1700	
2000 HUMMER			
H1	6.5L V8 DSL	E-1700	
1999 HUMMER			
H1	6.5L V8 DSL	E-1700	
1998 HUMMER			
H1	6.5L V8 DSL	E-1700	
1997 HUMMER			
H1	6.5L V8 DSL	E-1700	
1996 HUMMER			
H1	6.5L V8 DSL	E-1700	
1995 HUMMER			
H1	6.5L V8 DSL	E-1700	
1994 HUMMER			
H1	6.5L V8 DSL	E-1700	
1993 HUMMER			
H1	6.5L V8 DSL	E-1700	
1992 HUMMER			
H1	6.5L V8 DSL	E-1700	
2011 HUSABERG			
FE390 Enduro	390		KN-655
FE450 Enduro	450		KN-655
FE570 Enduro	570		KN-655
FS570 Supermoto	570		KN-655
FX450 Cross Country	450		KN-655
2010 HUSABERG			
FE390 Enduro	390		KN-655
FE450 Enduro	450		KN-655
FE570 Enduro	570		KN-655
FX450 Cross Country	450		KN-655

*Indicates 2 filters required ♦ - Intake kit available - see page 80 Applications updated daily at knfilters.com

Vehicle	Engine Type	Air Filter	Oil Filter
2009 HUSABERG			
FE450 Enduro	450		KN-655
FE570 Enduro	570		KN-655
2008 HUSABERG			
FE450	450		KN-155
FE550	550		KN-155
2012 HUSQVARNA			
Nuda 900	898	BM-8006	
Nuda 900R	898	BM-8006	
TC250	250		KN-116
TC449	449		KN-611
TE310	310		KN-116
TE449	449		KN-611
TE511	511		KN-611
2011 HUSQVARNA			
SMR449	449		KN-611
SMR511	511		KN-611
SMR630	630		KN-563
SMS630	630		KN-563
TC250	250		KN-116
TC449	449		KN-611
TCX510	510		KN-563
TE250	250		KN-116
TE310	310		KN-116
TE449	449		KN-611
TE511	511		KN-611
TE630	630		KN-563
TXC250	250		KN-116
TXC450	450		KN-563
2010 HUSQVARNA			
SM450R	450		KN-563
SM510R	510		KN-563
SM630 IE	630		KN-563
TC250	250		KN-116
TC450	450		KN-563
TC510	510		KN-563
TE250	250		KN-116
TE310	310		KN-563
TE450	450		KN-563
TE510	510		KN-563
TXC250	250		KN-116
TXC450	450		KN-563
2009 HUSQVARNA			
SM450R	450	HU-1200	KN-563
SM510R	510	HU-1200	KN-563
SM450RR	450		KN-563
TC450	450	HU-1200	KN-563
TE250	250	HU-1200	KN-563
TE310	310		KN-563
TE450	450	HU-1200	KN-563
TE510	510	HU-1200	KN-563
TXC250	250	HU-1200	KN-563
WR300	300	HU-1200	
2008 HUSQVARNA			
SM450R	450	HU-1200	KN-563
SM510R	510	HU-1200	KN-563
SM610	610		KN-154
SM610S IE	610		KN-154
TE250	250	HU-1200	KN-563
TE450	450	HU-1200	KN-563
TE510	510	HU-1200	KN-563
TE610	610		KN-154

Vehicle	Engine Type	Air Filter	Oil Filter
2008 HUSQVARNA			
TE610 IE	610		KN-154
2007 HUSQVARNA			
SM450R	450	HU-1200	KN-154
SM510R	510	HU-1200	KN-154
SM610	610		KN-154
SM610S IE	610		KN-154
TC450	450	HU-1200	KN-154
TE250	250	HU-1200	KN-154
TE450	450	HU-1200	KN-154
TE510	510	HU-1200	KN-154
TE610	610		KN-154
TE610 IE	610		KN-154
2006 HUSQVARNA			
SM450R	450	HU-1200	KN-154
SM510R	510	HU-1200	KN-154
SM610	610		KN-154
SM610S IE	610		KN-154
TC450	450	HU-1200	KN-154
TE250	250	HU-1200	KN-154
TE450	450	HU-1200	KN-154
TE510	510	HU-1200	KN-154
TE610	610		KN-154
TE610 IE	610		KN-154
2005 HUSQVARNA			
SM510R	510	HU-1200	KN-154
TC250	250	HU-1200	KN-154
TE450	450	HU-1200	KN-154
2004 HUSQVARNA			
SM450R	450	HU-1200	KN-154
TC450	450	HU-1200	KN-154
TE450	450	HU-1200	KN-154
2000 HUSQVARNA			
TE610E	610		KN-154
TE610E LT	610		KN-154
1993 HUSQVARNA			
WR250	250	HU-1200	
1987 HUSQVARNA			
TC510	510	HU-0600	
TE510	510	HU-0600	
1986 HUSQVARNA			
TC510	510	HU-0600	
2011 HYOSUNG			
GT250R Comet	250		KN-131
GV250 Aquila	250		KN-131
2010 HYOSUNG			
GT250R Comet	250		KN-131
GV250 Aquila	250		KN-131
2009 HYOSUNG			
GT250R Comet	250		KN-131
GT650 Comet EFI	647	HY-6507	
GT650R Comet EFI	647	HY-6507	
GV250 Aquila	250		KN-131
2008 HYOSUNG			
GT250 Comet	250		KN-131
GT250R Comet	250		KN-131
GT650 Comet	647	HY-6507	
GT650 Naked SE i	647	HY-6507	
GT650R Sport F/I	647	HY-6507	

*Indicates 2 filters required ♦ - Intake kit available - see page 80 Applications updated daily at knfilters.com

Vehicle	Engine Type	Air Filter	Oil Filter
2008 HYOSUNG			
GT650R Sporttouring	647	HY-6507	
GT650S Sport	647	HY-6507	
GV250 Aquila	250		KN-131
GV650 Aquila	647	HY-6507	
2007 HYOSUNG			
GT250 Comet	250		KN-131
GT250R Comet	250		KN-131
GT650 Comet	647	HY-6507	
GT650 Naked SE i	647	HY-6507	
GT650R Sport F/I	647	HY-6507	
GT650R Sporttouring	647	HY-6507	
GT650S Sport	647	HY-6507	
GV250 Aquila	250		KN-131
GV650 Aquila	647	HY-6507	
RX125SM	125		KN-131
2006 HYOSUNG			
GT250 Comet	250		KN-131
GT650 Comet	647	HY-6507	
GT650 Naked	647	HY-6507	
GT650R Sporttouring	647	HY-6507	
GT650S Sport	647	HY-6507	
GV650 Aquila	647	HY-6507	
2005 HYOSUNG			
GT250R Comet	250		KN-131
GV250 Aquila	250		KN-131
2004 HYOSUNG			
GT250 Comet	250		KN-131
GV250 Aquila	250		KN-131
2002 HYOSUNG			
GV250 Aquila	250		KN-131
2013 HYUNDAI			
Accent	1.6L L4 F/I	33-2472	HP-1004
Azera	3.3L V6 F/I	33-2448	
Elantra	1.8L L4 F/I	33-2451 ♦	HP-1004
Equus	5.0L V8 F/I	33-2426	
Genesis	5.0L V8 F/I	33-2426	
Genesis Coupe	2.0L L4 F/I	33-2482	HP-1004
Genesis Coupe	3.8L V6 F/I	33-2481	
Genesis Sedan	3.8L V6 F/I	33-2426	
i20	1.1L L4 DSL	33-2960	
i20	1.2L L4 F/I	33-2960	
i20	1.4L L4 F/I	33-2960	
Santa Fe	2.0L L4 F/I		HP-1004
Santa Fe	2.4L L4 F/I		HP-1004
Sonata	2.0L L4 F/I	33-2448 ♦	HP-1004
Sonata	2.4L L4 F/I	33-2448 ♦	HP-1004
Tucson	2.0L L4 F/I	33-2451	HP-1004
Tucson	2.4L L4 F/I	33-2451	HP-1004
Veloster	1.6L L4 F/I	33-2472	HP-1004
Veracruz	3.8L V6 F/I	33-2389	
2012 HYUNDAI			
Accent	1.6L L4 F/I	33-2472	HP-1004
Azera	3.3L V6 F/I	33-2448	
Elantra	1.8L L4 F/I	33-2451 ♦	HP-1004
Elantra	2.0L L4 F/I	33-2380	HP-1004
Equus	5.0L V8 F/I	33-2426	
Genesis	4.6L V8 F/I	33-2426	
Genesis	5.0L V8 F/I	33-2426	
Genesis Coupe	2.0L L4 F/I	33-2958 ♦	HP-1004
Genesis Coupe	3.8L V6 F/I	33-2958	

Vehicle	Engine Type	Air Filter	Oil Filter
2012 HYUNDAI			
Genesis Sedan	3.8L V6 F/I	33-2426	
i10	1.1L L4 F/I	33-2978	
i10	1.2L L4 F/I	33-2977	
i20	1.2L L4 F/I	33-2960	
i20	1.4L L4 DSL	33-2960	
i20	1.4L L4 F/I	33-2960	
I30	1.4L L4 F/I - from 3/12	33-2451	
I30	1.4L L4 F/I - to 2/12	33-2380	
I30	1.6L L4 F/I - from 3/12	33-2451	
I30	1.6L L4 F/I - to 2/12	33-2380	
iX20	1.4L L4 DSL	33-2960	
iX20	1.4L L4 F/I	33-2960	
iX20	1.6L L4 F/I	33-2960	
ix55	3.0L V6 DSL	33-2947	
Santa Fe	2.2L L4 DSL	33-2969	
Santa Fe	2.4L L4 F/I	33-2448	HP-1004
Santa Fe	3.5L V6 F/I	33-2448	
Sonata	2.0L L4 F/I	33-2448 ♦	HP-1004
Sonata	2.4L L4 F/I	33-2448 ♦	HP-1004
Sonata Hybrid	2.4L L4 F/I	33-2448	HP-1004
Tucson	2.0L L4 F/I	33-2451	HP-1004
Tucson	2.4L L4 F/I	33-2451	HP-1004
Veloster	1.6L L4 F/I	33-2472 ♦	HP-1004
Veracruz	3.8L V6 F/I	33-2389	
2011 HYUNDAI			
Accent	1.6L L4 F/I	33-2354	HP-1004
Azera	3.3L V6 F/I	33-2346	
Azera	3.8L V6 F/I	33-2346	
Elantra	1.8L L4 F/I	33-2451 ♦	HP-1004
Elantra	2.0L L4 F/I	33-2380	HP-1004
Equus	4.6L V8 F/I	33-2426	
Genesis	4.6L V8 F/I	33-2426	
Genesis Coupe	2.0L L4 F/I	33-2958 ♦	HP-1004
Genesis Coupe	3.8L V6 F/I	33-2958	
Genesis Sedan	3.8L V6 F/I	33-2427	
i10	1.1L L4 F/I	33-2978	
i10	1.2L L4 F/I	33-2977	
i20	1.2L L4 F/I	33-2960	
i20	1.4L L4 DSL	33-2960	
i20	1.4L L4 F/I	33-2960	
I30	1.4L L4 F/I	33-2380 ♦	
I30	1.6L L4 DSL	33-2380	
I30	1.6L L4 F/I	33-2380 ♦	
i40	2.0L L4 F/I	33-2451	
iX20	1.6L L4 F/I	33-2960	
IX35	2.0L L4 DSL	33-2451	
IX35	2.0L L4 F/I	33-2451	
ix55	3.0L V6 DSL	33-2947	
Santa Fe	2.2L L4 DSL	33-2969	
Santa Fe	2.4L L4 F/I	33-2448	HP-1004
Santa Fe	3.5L V6 F/I	33-2448	
Sonata	2.0L L4 F/I	33-2448 ♦	HP-1004
Sonata	2.4L L4 F/I	33-2448 ♦	HP-1004
Sonata Hybrid	2.4L L4 F/I	33-2448	HP-1004
Tucson	2.0L L4 F/I	33-2451	HP-1004
Tucson	2.4L L4 F/I	33-2451	HP-1004
Veloster	1.6L L4 F/I	33-2472	
Veracruz	3.8L V6 F/I	33-2389	
2010 HYUNDAI			
Accent	1.4L L4 F/I	33-2354	
Accent	1.6L L4 F/I	33-2354	HP-1004
Azera	3.3L V6 F/I	33-2346	
Azera	3.8L V6 F/I	33-2346	

*Indicates 2 filters required ♦ - Intake kit available - see page 80 Applications updated daily at knfilters.com

Vehicle	Engine Type	Air Filter	Oil Filter
2010 HYUNDAI			
Elantra	2.0L L4 F/I	33-2380	HP-1004
Genesis	4.6L V8 F/I	33-2426	
Genesis Coupe	2.0L L4 F/I	33-2958 ♦	HP-1004
Genesis Coupe	3.8L V6 F/I	33-2958	
Genesis Sedan	3.8L V6 F/I	33-2427	
Grandeur	3.3L V6 F/I	33-2346	
i10	1.1L L4 F/I	33-2978	
i10	1.2L L4 F/I	33-2977	
i20	1.2L L4 F/I	33-2960	
i20	1.6L L4 DSL	33-2960	
i20	1.6L L4 F/I	33-2960	
I30	1.6L L4 DSL	33-2380	
I30	1.6L L4 F/I	33-2380 ♦	
I30	2.0L L4 DSL	33-2380	
I30	2.0L L4 F/I	33-2380	
iX20	1.6L L4 F/I	33-2960	
Santa Fe	2.2L L4 DSL - from 8/10	33-2969	
Santa Fe	2.2L L4 DSL - to 7/10	33-2378	
Santa Fe	2.4L L4 F/I	33-2448	HP-1004
Santa Fe	3.5L V6 F/I	33-2448	
Sonata	2.4L L4 F/I	33-2887	HP-1004
Sonata	3.3L V6 F/I	33-2346	
Tucson	2.0L L4 DSL	33-2201	
Tucson	2.4L L4 F/I	33-2451	HP-1004
Veracruz	3.8L V6 F/I	33-2389	
2009 HYUNDAI			
Accent	1.4L L4 F/I	33-2354	
Accent	1.6L L4 F/I	33-2354	HP-1004
Azera	3.3L V6 F/I	33-2346	HP-7022
Azera	3.8L V6 F/I	33-2346	HP-7022
Elantra	2.0L L4 F/I	33-2380	HP-1004
Entourage	3.8L V6 F/I	33-2368	HP-7022
Genesis	4.6L V8 F/I	33-2426	
Genesis Coupe	2.0L L4 F/I	33-2958	
Genesis Coupe	3.8L V6 F/I	33-2958	
Genesis Sedan	3.8L V6 F/I	33-2427	
i10	1.2L L4 F/I	33-2977	
i20	1.2L L4 F/I	33-2960	
i20	1.4L L4 DSL	33-2960	
i20	1.4L L4 F/I	33-2960	
i20	1.6L L4 DSL	33-2960	
i20	1.6L L4 F/I	33-2960	
I30	1.6L L4 DSL	33-2380	
I30	1.6L L4 F/I	33-2380 ♦	
I30	2.0L L4 DSL	33-2380	
I30	2.0L L4 F/I	33-2380 ♦	
Matrix	1.6L L4 F/I	33-2868	
Santa Fe	2.2L L4 DSL	33-2378	
Santa Fe	2.7L V6 F/I	33-2378	HP-1008
Santa Fe	3.3L V6 F/I	33-2378	HP-7022
Sonata	2.4L L4 F/I	33-2887	HP-1004
Sonata	3.3L V6 F/I	33-2346	HP-7022
Sonata V	2.0L L4 F/I	33-2887	
Sonata V	3.3L V6 F/I	33-2346	
Tucson	2.0L L4 DSL	33-2201	
Tucson	2.0L L4 F/I	33-2201	HP-1004
Tucson	2.7L V6 F/I	33-2201	HP-1008
Veracruz	3.8L V6 F/I	33-2389	
2008 HYUNDAI			
Accent	1.4L L4 F/I	33-2354	
Accent	1.6L L4 F/I	33-2354	HP-1004
Azera	3.3L V6 F/I	33-2346	HP-7022

Vehicle	Engine Type	Air Filter	Oil Filter
2008 HYUNDAI			
Azera	3.8L V6 F/I	33-2346	HP-7022
Coupe	2.7L V6 F/I	33-2201 ♦	
Elantra	2.0L L4 F/I	33-2380	HP-1004
Entourage	3.8L V6 F/I	33-2368	HP-7022
Genesis Coupe	2.0L L4 F/I	33-2958	
Genesis Coupe	3.8L V6 F/I	33-2958	
Getz	1.5L L4 F/I	33-2094	
i10	1.1L L4 F/I	33-2978	
i10	1.2L L4 F/I	33-2977	
i20	1.6L L4 DSL	33-2960	
i20	1.6L L4 F/I	33-2960	
I30	1.6L L4 DSL	33-2380	
I30	1.6L L4 F/I	33-2380 ♦	
Santa Fe	2.2L L4 DSL	33-2378	
Santa Fe	2.7L V6 F/I	33-2378	HP-1008
Santa Fe	3.3L V6 F/I	33-2378	HP-7022
Sonata	2.4L L4 F/I	33-2887	HP-1004
Sonata	3.3L V6 F/I	33-2346	HP-7022
Sonata V	2.0L L4 F/I	33-2887	
Sonata V	2.4L L4 F/I	33-2887	HP-1004
Sonata V	3.3L V6 F/I	33-2346	
Terracan	2.5L L4 DSL	33-2833	
Terracan	2.9L L4 DSL	33-2833	
Terracan	3.5L V6 DSL	33-2833	
Tiburon	2.0L L4 F/I	33-2201	HP-1004
Tiburon	2.7L V6 F/I	33-2201	HP-1008
Tucson	2.0L L4 DSL	33-2201	
Tucson	2.0L L4 F/I	33-2201	HP-1004
Tucson	2.7L V6 F/I	33-2201	HP-1008
Veracruz	3.8L V6 F/I	33-2389	HP-7022
2007 HYUNDAI			
Accent	1.4L L4 F/I	33-2354	
Accent	1.6L L4 F/I	33-2354	HP-1004
Azera	3.3L V6 F/I	33-2346	HP-7022
Azera	3.8L V6 F/I	33-2346	HP-7022
Elantra	1.6L L4 F/I	33-2201	
Elantra	2.0L L4 DSL	33-2201	
Elantra	2.0L L4 F/I		HP-1004
Elantra	2.0L L4 F/I - Non-US	33-2201	HP-1004
Elantra	2.0L L4 F/I - US	33-2380	HP-1004
Entourage	3.8L V6 F/I	33-2368	HP-7022
Getz	1.1L L4 F/I	33-2094 ♦	
I30	1.6L L4 DSL	33-2380	
I30	1.6L L4 F/I	33-2380 ♦	
Santa Fe	2.2L L4 DSL	33-2378	
Santa Fe	2.7L V6 F/I	33-2378	HP-1008
Santa Fe	3.3L V6 F/I	33-2378	HP-7022
Sonata	2.4L L4 F/I	33-2887	HP-1004
Sonata	3.3L V6 F/I	33-2346	HP-7022
Sonata V	2.0L L4 F/I	33-2887	
Sonata V	2.4L L4 F/I	33-2887	HP-1004
Sonata V	3.3L V6 F/I	33-2346	
Tiburon	2.0L L4 F/I	33-2201	HP-1004
Tiburon	2.7L V6 F/I	33-2201	HP-1008
Tucson	2.0L L4 DSL	33-2201	
Tucson	2.0L L4 F/I	33-2201	HP-1004
Tucson	2.7L V6 F/I	33-2201	HP-1008
Tucson	3.3L V6 F/I	33-2378	
Veracruz	3.0L V6 DSL	33-2947	
Veracruz	3.8L V6 F/I	33-2389	HP-7022
2006 HYUNDAI			
Accent	1.3L L4 F/I	33-2182 ♦	
Accent	1.4L L4 F/I	33-2354	

*Indicates 2 filters required ♦ - Intake kit available - see page 80 Applications updated daily at knfilters.com

Vehicle	Engine Type	Air Filter	Oil Filter
2006 HYUNDAI			
Accent	1.5L L4 F/I	33-2182	
Accent	1.6L L4 F/I	33-2354 ♦	HP-1004
Azera	3.8L V6 F/I	33-2346	HP-7022
Coupe	2.0L L4 F/I	33-2201 ♦	
Coupe	2.7L V6 F/I	33-2201 ♦	
Elantra	1.6L L4 F/I	33-2201	
Elantra	2.0L L4 DSL	33-2201	
Elantra	2.0L L4 F/I	33-2201	HP-1004
Matrix	1.6L L4 F/I	33-2868	
Santa Fe	2.0L L4 DSL	33-2198	
Santa Fe	2.0L L4 F/I	33-2198	
Santa Fe	2.2L L4 DSL	33-2378	
Santa Fe	2.4L L4 F/I	33-2198	HP-1004
Santa Fe	2.7L V6 F/I		HP-1008
Santa Fe	2.7L V6 F/I - Non-US, from 4/06	33-2378	HP-1008
Santa Fe	2.7L V6 F/I - US, Non-US, to 3/06	33-2198	HP-1008
Santa Fe	3.5L V6 F/I	33-2312	HP-1004
Sonata	2.4L L4 F/I	33-2887	HP-1004
Sonata	3.3L V6 F/I	33-2346	HP-7022
Sonata V	2.0L L4 F/I	33-2887	
Sonata V	2.4L L4 F/I	33-2887	HP-1004
Sonata V	3.3L V6 F/I	33-2346	
Tiburon	2.0L L4 F/I	33-2201	HP-1004
Tiburon	2.7L V6 F/I	33-2201	HP-1008
Tucson	2.0L L4 DSL	33-2201	
Tucson	2.0L L4 F/I	33-2201	HP-1004
Tucson	2.7L V6 F/I	33-2201	HP-1008
Veracruz	3.0L V6 DSL	33-2947	
2005 HYUNDAI			
Accent	1.3L L4 F/I	33-2182 ♦	
Accent	1.4L L4 F/I	33-2354	
Accent	1.5L L4 F/I	33-2182	
Accent	1.6L L4 F/I	33-2182 ♦	HP-1004
Elantra	1.6L L4 F/I	33-2201	
Elantra	1.8L L4 F/I	33-2201	
Elantra	2.0L L4 DSL	33-2201	
Elantra	2.0L L4 F/I	33-2201	HP-1004
Getz	1.3L L4 F/I	33-2094 ♦	
Santa Fe	2.2L L4 DSL	33-2378	
Santa Fe	2.4L L4 F/I	33-2198	HP-1004
Santa Fe	2.7L V6 F/I	33-2198	HP-1008
Santa Fe	3.5L V6 F/I	33-2312	HP-1004
Sonata	2.4L L4 F/I	33-2188	HP-1004
Sonata	2.7L V6 F/I	33-2188	HP-1008
Sonata IV	2.0L L4 F/I	33-2188	
Sonata V	2.4L L4 F/I	33-2887	
Sonata V	3.3L V6 F/I	33-2346	
Terracan	2.9L L4 DSL	33-2833	
Tiburon	2.0L L4 F/I	33-2201	HP-1004
Tiburon GT	2.7L V6 F/I	33-2201 ♦	HP-1008
Tiburon SE	2.7L V6 F/I	33-2201	HP-1008
Tucson	2.0L L4 DSL	33-2201	
Tucson	2.0L L4 F/I	33-2201	HP-1004
Tucson	2.7L V6 F/I	33-2201	HP-1008
XG350	3.5L V6 F/I	33-2199	HP-1004
2004 HYUNDAI			
Accent	1.3L L4 F/I	33-2182 ♦	
Accent	1.5L L4 F/I	33-2182	
Accent	1.6L L4 F/I	33-2182 ♦	HP-1004
Elantra	1.6L L4 F/I	33-2201	
Elantra	1.8L L4 F/I	33-2201	
Elantra	2.0L L4 DSL	33-2201	

Vehicle	Engine Type	Air Filter	Oil Filter
2004 HYUNDAI			
Elantra	2.0L L4 F/I	33-2201	HP-1004
Getz	1.3L L4 F/I	33-2094 ♦	
Matrix	1.5L L4 DSL	33-2868	
Santa Fe	2.0L L4 DSL	33-2198	
Santa Fe	2.0L L4 F/I	33-2198	
Santa Fe	2.4L L4 F/I	33-2198	HP-1004
Santa Fe	2.7L V6 F/I	33-2198	HP-1008
Santa Fe	3.5L V6 F/I	33-2312	HP-1004
Sonata	2.4L L4 F/I	33-2188	HP-1004
Sonata	2.7L V6 F/I	33-2188	HP-1008
Sonata IV	2.0L L4 F/I	33-2188	
Sonata IV	2.7L V6 F/I	33-2188	HP-1008
Terracan	2.5L L4 DSL	33-2833	
Terracan	2.9L L4 DSL	33-2833	
Terracan	3.5L V6 DSL	33-2833	
Tiburon	2.0L L4 F/I	33-2201	HP-1004
Tiburon GT	2.7L V6 F/I	33-2201 ♦	HP-1008
XG350	3.5L V6 F/I	33-2199	HP-1004
2003 HYUNDAI			
Accent	1.3L L4 F/I	33-2182 ♦	
Accent	1.5L L4 F/I	33-2182 ♦	HP-1004
Accent	1.6L L4 F/I	33-2182 ♦	HP-1004
Coupe	2.7L V6 F/I	33-2201 ♦	
Elantra	1.6L L4 F/I	33-2201	
Elantra	1.8L L4 F/I	33-2201	
Elantra	2.0L L4 DSL	33-2201	
Elantra	2.0L L4 F/I	33-2201	HP-1004
Excel	1.5L L4 F/I	33-2093	HP-1004
Santa Fe	2.0L L4 DSL	33-2198	
Santa Fe	2.0L L4 F/I	33-2198	
Santa Fe	2.4L L4 F/I	33-2198	HP-1004
Santa Fe	2.7L V6 F/I	33-2198	HP-1008
Santa Fe	3.5L V6 F/I		HP-1004
Sonata	2.4L L4 F/I	33-2188	HP-1004
Sonata	2.7L V6 F/I	33-2188	HP-1008
Sonata IV	2.0L L4 F/I	33-2188	
Sonata IV	2.7L V6 F/I	33-2188	HP-1008
Tiburon	2.0L L4 F/I	33-2201	HP-1004
Tiburon GT	2.7L V6 F/I	33-2201 ♦	HP-1008
XG350	3.5L V6 F/I	33-2199	HP-1004
2002 HYUNDAI			
Accent	1.3L L4 F/I	33-2182 ♦	
Accent	1.5L L4 F/I	33-2182 ♦	HP-1004
Accent	1.6L L4 F/I	33-2182	HP-1004
Coupe	2.7L V6 F/I	33-2201 ♦	
Elantra	1.6L L4 F/I	33-2201	
Elantra	1.8L L4 F/I	33-2201	
Elantra	2.0L L4 DSL	33-2201	
Elantra	2.0L L4 F/I	33-2201	HP-1004
Excel	1.5L L4 F/I	33-2093	HP-1004
Santa Fe	2.0L L4 DSL	33-2198	
Santa Fe	2.0L L4 F/I	33-2198	
Santa Fe	2.4L L4 F/I	33-2198	HP-1004
Santa Fe	2.7L V6 F/I	33-2198	HP-1008
Sonata	2.4L L4 F/I	33-2188	HP-1004
Sonata	2.7L V6 F/I	33-2188	HP-1008
Sonata IV	2.0L L4 F/I	33-2188	
Sonata IV	2.7L V6 F/I	33-2188	HP-1008
Terracan	3.5L V6 DSL	33-2833	
XG350	3.5L V6 F/I	33-2199	HP-1004
2001 HYUNDAI			
Accent	1.3L L4 F/I	33-2182 ♦	

*Indicates 2 filters required ♦ - Intake kit available - see page 80 Applications updated daily at knfilters.com

Vehicle	Engine Type	Air Filter	Oil Filter
2001 HYUNDAI			
Accent	1.5L L4 F/I	33-2182♦	HP-1004
Accent	1.6L L4 F/I		HP-1004
Accent	1.6L L4 F/I - exc. leaded fuel	33-2182	HP-1004
Accent	1.6L L4 F/I - leaded fuel	33-2202	HP-1004
Elantra	1.6L L4 F/I	33-2201	
Elantra	1.8L L4 F/I	33-2201	
Elantra	2.0L L4 DSL	33-2201	
Elantra	2.0L L4 F/I	33-2201	HP-1004
Santa Fe	2.0L L4 DSL	33-2198	
Santa Fe	2.0L L4 F/I	33-2198	
Santa Fe	2.4L L4 F/I	33-2198	HP-1004
Santa Fe	2.7L V6 F/I	33-2198	HP-1008
Sonata	2.4L L4 F/I	33-2188	HP-1004
Sonata	2.5L V6 F/I	33-2188	HP-1004
Sonata III	2.0L L4 F/I	33-2188	
Sonata III	2.4L L4 F/I	E-2875	HP-1004
Sonata III	2.5L V6 F/I	33-2188	HP-1004
Sonata IV	2.0L L4 F/I	33-2188	
Sonata IV	2.7L V6 F/I	33-2188	HP-1008
Terracan	2.5L L4 DSL	33-2833	
Terracan	2.9L L4 DSL	33-2833	
Terracan	3.5L V6 DSL	33-2833	
Tiburon	2.0L L4 F/I	33-2753	HP-1004
XG300	3.0L V6 F/I	33-2199	HP-1004
2000 HYUNDAI			
Accent	1.3L L4 F/I	33-2182♦	
		33-2796	
Accent	1.5L L4 F/I	33-2182♦	HP-1004
Elantra	1.6L L4 F/I	33-2201	
Elantra	1.8L L4 F/I	33-2201	
Elantra	2.0L L4 F/I		HP-1004
Elantra	2.0L L4 F/I - Non-US	33-2201	HP-1004
Elantra	2.0L L4 F/I - US	33-2753	HP-1004
Galloper II	3.0L V6 F/I	E-2875	
Sonata	2.4L L4 F/I	33-2188	HP-1004
Sonata	2.5L V6 F/I	33-2188	HP-1004
Sonata III	2.4L L4 F/I	E-2875	HP-1004
Sonata III	2.5L V6 F/I	33-2188	HP-1004
Tiburon	2.0L L4 F/I	33-2753	HP-1004
XG300	3.0L V6 F/I	33-2199	
1999 HYUNDAI			
Accent	1.3L L4 F/I	33-2796	
Accent	1.5L L4 F/I	33-2161	HP-1004
Elantra	2.0L L4 F/I	33-2753	HP-1004
Excel	1.5L L4 F/I	33-2093	HP-1004
Sonata	2.4L L4 F/I	33-2188	HP-1004
Sonata	2.5L V6 F/I	33-2188	HP-1004
Sonata III	2.0L L4 F/I	33-2188	
Sonata III	2.4L L4 F/I	E-2875	HP-1004
Sonata III	2.5L V6 F/I	33-2188	HP-1004
Tiburon	2.0L L4 F/I	33-2753	HP-1004
1998 HYUNDAI			
Accent	1.5L L4 F/I	33-2161	HP-1004
Coupe	2.0L L4 F/I	33-2753♦	
Elantra	1.8L L4 F/I	33-2753	HP-1004
Sonata	2.0L L4 F/I	E-2875	HP-1004
Sonata II	2.0L L4 F/I - w/Panel Filter	33-2680	
Sonata II	2.0L L4 F/I - w/Round Filter	E-2875	
Sonata III	2.0L L4 F/I	33-2188	
Tiburon	2.0L L4 F/I	33-2753	HP-1004

Vehicle	Engine Type	Air Filter	Oil Filter
1997 HYUNDAI			
Accent	1.5L L4 F/I	33-2161	HP-1004
Elantra	1.8L L4 F/I	33-2753	HP-1004
Sonata II	2.0L L4 F/I - w/Panel Filter	33-2680	
Tiburon	1.8L L4 F/I	33-2753	HP-1004
Tiburon	2.0L L4 F/I	33-2753	HP-1004
1996 HYUNDAI			
Accent	1.3L L4 F/I	33-2796	
Accent	1.5L L4 F/I	33-2161	HP-1004
Elantra	1.8L L4 F/I	33-2753	HP-1004
Excel	1.5L L4 F/I - from 11/96	33-2093	HP-1004
1995 HYUNDAI			
Accent	1.5L L4 F/I	33-2161	HP-1004
1994 HYUNDAI			
Excel	1.5L L4 F/I	E-2875	HP-1004
Excel	1.5L L4 F/I - Australian	E-2875	HP-1004
Excel	1.5L L4 F/I - Australian, w/Panel Filter, to 10/94	33-2034	HP-1004
Excel	1.5L L4 F/I - Australian, w/Round Filter, to 10/94	E-2875	HP-1004
2013 INDIAN			
Chief	105 CI	E-3290	
2012 INDIAN			
Chief Classic	105 CI	E-3290	
Chief Dark Horse	105 CI	E-3290	
Chief Vintage	105 CI	E-3290	
2009 INDIAN			
Chief Vintage	105 CI	E-3290	
2003 INDIAN			
Chief	1638	E-3981	
Scout	1436 - w/S&S teardrop backplate and Indian teardrop cvr	E-3971	
Spirit	1436 - w/S&S teardrop backplate and Indian teardrop cvr	E-3971	
2002 INDIAN			
Chief	1638	E-3981	
Scout	1436 - w/S&S teardrop backplate and Indian teardrop cvr	E-3971	
Spirit	1436 - w/S&S teardrop backplate and Indian teardrop cvr	E-3971	
2001 INDIAN			
Scout	1436 - w/S&S teardrop backplate and Indian teardrop cvr	E-3971	
Spirit	1436 - w/S&S teardrop backplate and Indian teardrop cvr	E-3971	
2000 INDIAN			
Chief	1436 - w/S&S teardrop backplate and Indian teardrop cvr	E-3971	
1999 INDIAN			
Chief	1436 - w/S&S teardrop backplate and Indian teardrop cvr	E-3971	
2013 INFINITI			
EX37	3.7L V6 F/I	33-2399	
FX37	3.7L V6 F/I	33-2409	HP-1008
FX50	5.0L V8 F/I	33-2409	HP-1010
G37	3.7L V6 F/I	33-2399*	HP-1008
JX35	3.5L V6 F/I	33-2031-2	HP-1008

*Indicates 2 filters required ♦ - Intake kit available - see page 80 Applications updated daily at knfilters.com

Vehicle	Engine Type	Air Filter	Oil Filter
2013 INFINITI			
M37	3.7L V6 F/I	33-2440	HP-1008
M56	5.6L V8 F/I	33-2409	HP-1010
QX56	5.6L V8 F/I	33-2456	HP-1010
2012 INFINITI			
EX35	3.5L V6 F/I	33-2399*	HP-1008
FX35	3.5L V6 F/I	33-2409*	HP-1008
FX50	5.0L V8 F/I	33-2409*	HP-1010
G25	2.5L V6 F/I	33-2399*	HP-1008
G37	3.7L V6 F/I	33-2399* ♦	HP-1008
M35h	3.5L V6 F/I		HP-1008
M37	3.7L V6 F/I	33-2440	HP-1008
M56	5.6L V8 F/I	33-2409*	HP-1010
QX56	5.6L V8 F/I	33-2456	HP-1010
2011 INFINITI			
EX35	3.5L V6 F/I	33-2399*	HP-1008
FX35	3.5L V6 F/I	33-2409*	HP-1008
FX50	5.0L V8 F/I	33-2409*	HP-1010
G25	2.5L V6 F/I	33-2399*	HP-1008
G37	3.7L V6 F/I	33-2399* ♦	HP-1008
M37	3.7L V6 F/I	33-2440	HP-1008
M56	5.6L V8 F/I	33-2409*	HP-1010
QX56	5.6L V8 F/I	33-2456	HP-1010
2010 INFINITI			
EX35	3.5L V6 F/I	33-2399*	HP-1008
FX35	3.5L V6 F/I	33-2409*	HP-1008
FX50	5.0L V8 F/I	33-2409	HP-1010
G37	3.7L V6 F/I	33-2399* ♦	HP-1008
M35	3.5L V6 F/I	33-2440	HP-1008
M45	4.5L V8 F/I	33-2398	HP-1010
QX56	5.6L V8 F/I	33-2286 ♦	HP-1010
2009 INFINITI			
EX35	3.5L V6 F/I	33-2399*	HP-1008
FX35	3.5L V6 F/I	33-2409*	HP-1008
FX50	5.0L V8 F/I	33-2409*	HP-1010
G37	3.7L V6 F/I	33-2399* ♦	HP-1008
M35	3.5L V6 F/I	33-2440	HP-1008
M45	4.5L V8 F/I	33-2398	HP-1010
QX56	5.6L V8 F/I	33-2286 ♦	HP-1010
2008 INFINITI			
EX35	3.5L V6 F/I	33-2399*	HP-1008
FX35	3.5L V6 F/I	33-2031-2	HP-1008
FX45	4.5L V8 F/I	33-2229	HP-1010
G35	3.5L V6 F/I	33-2399* ♦	HP-1008
G37	3.7L V6 F/I	33-2399* ♦	HP-1008
M35	3.5L V6 F/I	33-2397	HP-1008
M45	4.5L V8 F/I	33-2398	HP-1010
QX56	5.6L V8 F/I	33-2286 ♦	HP-1010
2007 INFINITI			
FX35	3.5L V6 F/I	33-2031-2	HP-1008
FX45	4.5L V8 F/I	33-2229	HP-1010
G35	3.5L V6 F/I		HP-1008
G35	3.5L V6 F/I - Coupe	33-2031-2	HP-1008
G35	3.5L V6 F/I - Sedan	33-2399* ♦	HP-1008
M35	3.5L V6 F/I	33-2397	HP-1008
M45	4.5L V8 F/I	33-2398	HP-1010
QX56	5.6L V8 F/I	33-2286 ♦	HP-1010
2006 INFINITI			
FX35	3.5L V6 F/I	33-2031-2	HP-1008
FX45	4.5L V8 F/I	33-2229	HP-1010
G35	3.5L V6 F/I	33-2031-2 ♦	HP-1008
2006 INFINITI			
M35	3.5L V6 F/I	33-2397	HP-1008
M45	4.5L V8 F/I	33-2398	HP-1010
Q45	4.5L V8 F/I	33-2229	HP-1010
QX56	5.6L V8 F/I	33-2286 ♦	HP-1010
2005 INFINITI			
FX35	3.5L V6 F/I	33-2031-2	HP-1008
FX45	4.5L V8 F/I	33-2229	HP-1010
G35	3.5L V6 F/I	33-2031-2 ♦	HP-1008
Q45	4.5L V8 F/I	33-2229	HP-1010
QX56	5.6L V8 F/I	33-2286 ♦	HP-1010
2004 INFINITI			
FX35	3.5L V6 F/I	33-2031-2	HP-1008
FX45	4.5L V8 F/I	33-2229	HP-1010
G35	3.5L V6 F/I - Coupe	33-2031-2 ♦	HP-1008
G35	3.5L V6 F/I - Sedan	33-2031-2 ♦	HP-1008
I35	3.5L V6 F/I	33-2031-2	HP-1010
M45	4.5L V8 F/I	33-2229	HP-1010
Q45	4.5L V8 F/I	33-2229	HP-1010
QX56	5.6L V8 F/I	33-2286 ♦	HP-1010
2003 INFINITI			
FX35	3.5L V6 F/I	33-2031-2	HP-1008
FX45	4.5L V8 F/I	33-2229	HP-1010
G35	3.5L V6 F/I - Coupe	33-2031-2 ♦	HP-1008
G35	3.5L V6 F/I - Sedan	33-2031-2 ♦	HP-1008
I35	3.5L V6 F/I	33-2031-2	HP-1010
M45	4.5L V8 F/I	33-2229	HP-1010
Q45	4.5L V8 F/I	33-2229	HP-1010
QX4	3.5L V6 F/I	33-2031-2	HP-1008
2002 INFINITI			
G20	2.0L L4 F/I	33-2031-2	HP-1008
I35	3.5L V6 F/I	33-2031-2	HP-1008
Q45	4.5L V8 F/I	33-2229	HP-1010
QX4	3.5L V6 F/I	33-2031-2	HP-1008
2001 INFINITI			
G20	2.0L L4 F/I	33-2031-2	HP-1008
I30	3.0L V6 F/I	33-2031-2	HP-1010
Q45	4.1L V8 F/I	33-2031-2	HP-1010
QX4	3.5L V6 F/I	33-2031-2	HP-1010
2000 INFINITI			
G20	2.0L L4 F/I	33-2031-2	HP-1008
I30	3.0L V6 F/I	33-2031-2	HP-1010
Q45	4.1L V8 F/I	33-2110	HP-1010
QX4	3.3L V6 F/I	33-2031-2	HP-1010
1999 INFINITI			
G20	2.0L L4 F/I	33-2031-2	HP-1008
I30	3.0L V6 F/I	33-2031-2	HP-1010
Q45	4.1L V8 F/I	33-2110	HP-1010
QX4	3.3L V6 F/I	33-2031-2	HP-1010
1998 INFINITI			
I30	3.0L V6 F/I	33-2031-2	HP-1010
Q45	4.1L V8 F/I	33-2110	HP-1010
QX4	3.3L V6 F/I	33-2031-2	HP-1010
1997 INFINITI			
I30	3.0L V6 F/I	33-2031-2	HP-1010
J30	3.0L V6 F/I	33-2031-2	HP-2008
Q45	4.1L V8 F/I	33-2110	HP-1010
QX4	3.3L V6 F/I	33-2031-2	HP-1010
1996 INFINITI			
G20	2.0L L4 F/I	33-2031-2	

*Indicates 2 filters required ♦ - Intake kit available - see page 80 Applications updated daily at knfilters.com

Vehicle	Engine Type	Air Filter	Oil Filter
1996 INFINITI			
I30	3.0L V6 F/I	33-2031-2	HP-1010
Q45	4.5L V8 F/I	33-2110	HP-2008
1995 INFINITI			
G20	2.0L L4 F/I	33-2031-2	
J30	3.0L V6 F/I	33-2031-2	HP-2008
Q45	4.5L V8 F/I	33-2110	HP-2008
1994 INFINITI			
G20	2.0L L4 F/I	33-2031-2	
J30	3.0L V6 F/I	33-2031-2	HP-2008
Q45	4.5L V8 F/I	33-2110	HP-2008
1993 INFINITI			
G20	2.0L L4 F/I	33-2031-2	
J30	3.0L V6 F/I	33-2031-2	HP-2008
Q45	4.5L V8 F/I	33-2110	HP-2008
1992 INFINITI			
G20	2.0L L4 F/I	33-2031-2	
Q45	4.5L V8 F/I	33-2110	HP-2008
1991 INFINITI			
G20	2.0L L4 F/I	33-2031-2	
M30	3.0L V6 F/I	33-2031-2	HP-2008
Q45	4.5L V8 F/I	33-2110	HP-2008
1990 INFINITI			
Q45	4.5L V8 F/I	33-2110	HP-2008
1980 INTERNATIONAL			
Scout II	198 L6 DSL	E-1090	
Scout II	345 V8 CARB		HP-3001
Scout II	345 V8 CARB - Calif.	E-1530	HP-3001
Scout II	345 V8 CARB - exc. Calif	E-1090	HP-3001
1979 INTERNATIONAL			
Scout II	345 V8 CARB	E-1090	HP-3001
1978 INTERNATIONAL			
Scout II	345 V8 CARB	E-1090	HP-3001
1977 INTERNATIONAL			
Scout II	304 V8 CARB	E-1090	HP-3001
Scout II	345 V8 CARB	E-1090	HP-3001
1976 INTERNATIONAL			
Scout II	304 V8 CARB	E-1090	HP-3001
Scout II	345 V8 CARB	E-1090	HP-3001
1974 INTERNATIONAL			
Scout II	304 V8 CARB	E-1090	HP-3001
Scout II	345 V8 CARB	E-1090	HP-3001
1973 INTERNATIONAL			
Scout II	345 V8 CARB	E-1090	HP-3001
1972 INTERNATIONAL			
Scout II	345 V8 CARB	E-1090	HP-3001
1969 INTERNATIONAL			
Scout	304 V8 CARB	E-1090	HP-3001
1967 INTERNATIONAL			
Scout	152 L4 CARB	E-1080	HP-3001
2011 ISUZU			
D-Max	2.5L L4 DSL	33-2013	
D-Max	3.0L L4 DSL	33-2013	
2010 ISUZU			
D-Max	2.5L L4 DSL	33-2013	
2010 ISUZU			
D-Max	3.0L L4 DSL	33-2013	
2009 ISUZU			
D-Max	2.5L L4 DSL	33-2013	
D-Max	3.0L L4 DSL	33-2013	
2008 ISUZU			
D-Max	2.5L L4 DSL	33-2013	
D-Max	3.0L L4 DSL	33-2013	
i-290	2.9L L4 F/I		HP-1007
i-370	3.7L L5 F/I		HP-2006
2007 ISUZU			
Ascender	4.2L L6 F/I	E-1009 ♦	HP-2006
D-Max	2.5L L4 DSL	33-2013	
D-Max	3.0L L4 DSL	33-2013	
i-280	2.8L L4 F/I	E-0773	
i-290	2.9L L4 F/I	E-0773	HP-1007
i-370	3.7L L5 F/I	E-0773	HP-2006
2006 ISUZU			
Ascender	4.2L L6 F/I	E-1009 ♦	HP-2006
i-280	2.8L L4 F/I	E-0773	HP-1007
I350	3.5L L5 F/I	E-0773	HP-2006
2005 ISUZU			
Ascender	4.2L L6 F/I	E-1009	HP-2006
Ascender	5.3L V8 F/I	E-1009	HP-1007
Rodeo	3.0L L4 DSL	E-2023	
Trooper	3.0L L4 DSL - OEM 8979410170	E-2447	
2004 ISUZU			
Ascender	4.2L L6 F/I	E-1009	HP-2006
Ascender	5.3L V8 F/I	E-1009	HP-1007
Axiom	3.5L V6 F/I		HP-1004
Rodeo	3.0L L4 DSL	E-2023	
Rodeo	3.2L V6 F/I	33-2108	HP-1004
Rodeo	3.5L V6 F/I	33-2108	HP-1004
Rodeo	3.5L V6 F/I - Australian	33-2918	HP-1004
2003 ISUZU			
Axiom	3.5L V6 F/I	33-2108	HP-1004
Rodeo	2.2L L4 F/I	33-2108	HP-1001
Rodeo	3.2L V6 F/I	33-2108	HP-1004
Rodeo Sport	2.2L L4 F/I		HP-1001
Rodeo Sport	3.2L V6 F/I		HP-1004
Trooper	3.0L L4 DSL - OEM 8979410170	E-2447	
2002 ISUZU			
Axiom	3.5L V6 F/I	33-2108	HP-1004
Rodeo	2.2L L4 F/I	33-2108	HP-1001
Rodeo	3.2L V6 F/I	33-2108	HP-1004
Rodeo Sport	2.2L L4 F/I		HP-1001
Rodeo Sport	3.2L V6 F/I		HP-1004
Trooper	3.0L L4 DSL - OEM 8979410170	E-2447	
Trooper	3.5L V6 F/I	33-2064	HP-1004
2001 ISUZU			
Rodeo	2.2L L4 F/I	33-2108	HP-1001
Rodeo	3.2L V6 F/I	33-2108	HP-1004
Rodeo Sport	2.2L L4 F/I		HP-1001
Rodeo Sport	3.2L V6 F/I		HP-1004
Trooper	3.0L L4 DSL - OEM 8979410170	E-2447	
Trooper	3.5L V6 F/I	33-2064	HP-1004
Vehicross	3.5L V6 F/I	33-2064	HP-1004

*Indicates 2 filters required ♦ - Intake kit available - see page 80 Applications updated daily at knfilters.com

Vehicle	Engine Type	Air Filter	Oil Filter
2000 ISUZU			
Amigo	2.2L L4 F/I	33-2108	HP-1001
Amigo	3.2L V6 F/I	33-2108	HP-1004
Hombre	2.2L L4 F/I	33-2042	HP-1001
Rodeo	2.2L L4 F/I	33-2108	HP-1001
Rodeo	3.2L V6 F/I	33-2108	HP-1004
Trooper	3.0L L4 DSL - OEM 8979410170	E-2447	
Trooper	3.5L V6 F/I	33-2064	HP-1004
Vehicross	3.5L V6 F/I	33-2064	HP-1004
1999 ISUZU			
Amigo	3.2L V6 F/I	33-2108	HP-1004
Hombre	2.2L L4 F/I	33-2042	HP-1001
Rodeo	2.2L L4 F/I	33-2108	HP-1001
Rodeo	3.2L V6 F/I	33-2108	HP-1004
Trooper	3.5L V6 F/I	33-2064	HP-1004
Vehicross	3.5L V6 F/I	33-2064	HP-1004
1998 ISUZU			
Amigo	2.2L L4 F/I	33-2108	HP-1001
Amigo	3.2L V6 F/I	33-2108	HP-1004
Hombre	2.2L L4 F/I	33-2042	HP-1001
Hombre	4.3L V6 F/I	33-2042	HP-2001
Rodeo	2.2L L4 F/I	33-2108	HP-1001
Rodeo	3.2L V6 F/I	33-2108	HP-1004
Trooper	3.5L V6 F/I	33-2064	HP-1004
1997 ISUZU			
Hombre	2.2L L4 F/I	33-2042	HP-1001
Rodeo	2.6L L4 F/I	E-2605-1	HP-1004
Rodeo	3.2L V6 F/I	33-2108	HP-1004
Trooper	3.2L V6 F/I	33-2064	HP-1004
1996 ISUZU			
Hombre	2.2L L4 F/I	33-2042	HP-1001
Rodeo	3.2L V6 F/I	33-2108	HP-1004
Trooper	3.2L V6 F/I	33-2064	HP-1004
1995 ISUZU			
Pickup	2.3L L4 F/I	E-2760	HP-1004
Rodeo	2.6L L4 F/I	E-2605-1	HP-1004
Rodeo	3.2L V6 F/I	33-2064	HP-1004
Trooper	3.2L V6 F/I	33-2064	HP-1004
1994 ISUZU			
Amigo	2.6L L4 F/I	E-2605-1	HP-1004
Pickup	2.3L L4 CARB	E-2760	HP-1004
Pickup	2.6L L4 F/I	E-2605-1	HP-1004
Pickup	3.1L V6 F/I	E-1065	HP-1001
Rodeo	2.6L L4 F/I	E-2605-1	HP-1004
Rodeo	3.2L V6 F/I	33-2064	HP-1004
Trooper	3.2L V6 F/I	33-2064	HP-1004
1993 ISUZU			
Amigo	2.6L L4 F/I	E-2605-1	HP-1004
Pickup	2.3L L4 CARB	E-2760	HP-1004
Rodeo	3.2L V6 F/I	33-2064	HP-1004
Trooper	3.2L V6 F/I	33-2064	HP-1004
1992 ISUZU			
Pickup	2.3L L4 CARB	E-2760	HP-1004
Pickup	2.6L L4 F/I	E-2605-1	HP-1004
Pickup	3.1L V6 F/I	E-1065	HP-1001
Rodeo	3.1L V6 F/I	E-1065	HP-1001
Trooper	3.1L DSL - Turbo	38-9154	
Trooper	3.2L V6 F/I	33-2064	HP-1004
1991 ISUZU			
Impulse	1.6L L4 F/I	33-2050-1	HP-1004
1991 ISUZU			
Pickup	2.3L L4 CARB	E-2760	HP-1004
Pickup	3.1L V6 F/I	E-1065	HP-1001
Trooper	2.6L L4 F/I	E-2605-1	HP-1004
Trooper	2.8L L6 DSL	E-2220	
Trooper	2.8L V6 F/I	E-1065	HP-1001
1990 ISUZU			
Amigo	2.6L L4 F/I	E-2605-1	HP-1004
Pickup	2.3L L4 CARB	E-2760	HP-1004
Trooper	2.6L L4 F/I	E-2605-1	HP-1004
Trooper	2.8L L6 DSL	E-2220	
Trooper	2.8L V6 F/I	E-1065	HP-1001
1989 ISUZU			
Trooper	2.6L L4 F/I		HP-1004
Trooper	2.8L L6 DSL	E-2220	
Trooper	2.8L V6 F/I	E-1065	HP-1001
1988 ISUZU			
Trooper	2.6L L4 F/I		HP-1004
1985 ISUZU			
Pickup	1.9L L4 CARB	E-2760	HP-1005
1983 ISUZU			
Pickup	1.9L L4 CARB	E-2760	HP-1005
Pickup	2.2L L4 DSL	E-2760	
1981 ISUZU			
Pickup	2.2L L4 DSL	E-2760	
2013 JAGUAR			
XFR	5.0L V8 F/I	33-2273*	
XJ	5.0L V8 F/I	33-2273*	
XKR-S	5.0L V8 F/I	33-2445	
2012 JAGUAR			
XF	2.2L L4 DSL	33-2273*	
XF	5.0L V8 F/I	33-2273*	
XFR	5.0L V8 F/I	33-2273*	
XJ	5.0L V8 F/I	33-2273*	
XK	5.0L V8 F/I	33-2445	
XKR	5.0L V8 F/I	33-2445	
XKR-S	5.0L V8 F/I	33-2445	
2011 JAGUAR			
XF	5.0L V8 F/I	33-2273*	
XFR	5.0L V8 F/I	33-2273*	
XJ	5.0L V8 F/I	33-2273*	
XK	5.0L V8 F/I	33-2445	
XKR	5.0L V8 F/I	33-2445	
2010 JAGUAR			
XF	4.2L V8 F/I	33-2273	HP-1014
XF	5.0L V8 F/I	33-2273*	
XFR	5.0L V8 F/I	33-2273*	
XJ	5.0L V8 F/I	33-2273*	
XK	5.0L V8 F/I	33-2445	
XKR	5.0L V8 F/I	33-2445	
2009 JAGUAR			
XF	4.2L V8 F/I	33-2273*	HP-1014
XF Luxury	4.2L V8 F/I	33-2273	HP-1014
XJ8	4.2L V8 F/I	33-2273*	HP-1014
XJR	4.2L V8 F/I	33-2273*	HP-1014
XK	4.2L V8 F/I		HP-1014
XKR	4.2L V8 F/I		HP-1014
X-Type	2.5L V6 F/I	33-2264	

*Indicates 2 filters required ♦ - Intake kit available - see page 80 Applications updated daily at knfilters.com

Vehicle	Engine Type	Air Filter	Oil Filter
2008 JAGUAR			
S-Type	3.0L V6 F/I - US	33-2273	
S-Type	4.2L V8 F/I	33-2273	HP-1014
XJ8	4.2L V8 F/I	33-2273	HP-1014
XJR	4.2L V8 F/I		HP-1014
XK	4.2L V8 F/I		HP-1014
XKR	4.2L V8 F/I		HP-1014
X-Type	3.0L V6 F/I	33-2264	HP-2009
2007 JAGUAR			
S-Type	4.2L V8 F/I	33-2273	HP-1014
XJ8	4.2L V8 F/I	33-2273	HP-1014
XJR	4.2L V8 F/I	33-2273	HP-1014
XK	4.2L V8 F/I		HP-1014
XK8	4.2L V8 F/I	33-2190	
XKR	4.2L V8 F/I		HP-1014
X-Type	3.0L V6 F/I	33-2264	HP-2009
2006 JAGUAR			
S-Type	3.0L V6 F/I		HP-2009
S-Type	3.0L V6 F/I - Non-US	33-2266	HP-2009
S-Type	3.0L V6 F/I - US	33-2273	HP-2009
S-Type	4.2L V8 F/I	33-2273	HP-1014
Super V8	4.2L V8 F/I	33-2273	HP-1014
Vanden Plas	4.2L V8 F/I	33-2273	HP-1014
XJ8	3.5L V8 F/I	33-2273	
XJ8	4.2L V8 F/I	33-2273	HP-1014
XJR	4.2L V8 F/I	33-2273	HP-1014
XK8	4.2L V8 F/I	33-2190	HP-1014
XK8-R	4.2L V8 F/I	33-2190	
XKR	4.2L V8 F/I	33-2190	HP-1014
X-Type	3.0L V6 F/I	33-2264	HP-2009
2005 JAGUAR			
S-Type	3.0L V6 F/I		HP-2009
S-Type	3.0L V6 F/I - Non-US	33-2266	HP-2009
S-Type	3.0L V6 F/I - US	33-2273	HP-2009
S-Type	4.2L V8 F/I	33-2273	HP-1014
Vanden Plas	4.2L V8 F/I	33-2273	HP-1014
XJ8	3.5L V8 F/I	33-2273	
XJ8	4.2L V8 F/I	33-2273	HP-1014
XJR	4.2L V8 F/I	33-2273	HP-1014
XK8	4.0L V8 F/I	33-2190	
XK8	4.2L V8 F/I	33-2190	HP-1014
XK8-R	4.2L V8 F/I	33-2190	
XKR	4.2L V8 F/I	33-2190	HP-1014
X-Type	2.5L V6 F/I	33-2264	HP-2009
X-Type	3.0L V6 F/I	33-2264	HP-2009
2004 JAGUAR			
S-Type	3.0L V6 F/I		HP-2009
S-Type	3.0L V6 F/I - Non-US	33-2266	HP-2009
S-Type	3.0L V6 F/I - US	33-2273	HP-2009
S-Type	4.2L V8 F/I	33-2273	HP-1014
Vanden Plas	4.2L V8 F/I	33-2273	HP-1014
XJ8	3.5L V8 F/I	33-2273	
XJ8	4.2L V8 F/I	33-2273	HP-1014
XJR	4.2L V8 F/I	33-2273	HP-1014
XK8	4.0L V8 F/I	33-2190	
XK8	4.2L V8 F/I	33-2190	HP-1014
XK8-R	4.2L V8 F/I	33-2190	
XKR	4.2L V8 F/I	33-2190	HP-1014
X-Type	2.5L V6 F/I	33-2264	HP-2009
X-Type	3.0L V6 F/I	33-2264	HP-2009
2003 JAGUAR			
S-Type	3.0L V6 F/I		HP-2009

Vehicle	Engine Type	Air Filter	Oil Filter
2003 JAGUAR			
S-Type	3.0L V6 F/I - Non-US	33-2266	HP-2009
S-Type	3.0L V6 F/I - US	33-2273	HP-2009
S-Type	4.2L V8 F/I	33-2273	HP-1014
XJ8	3.5L V8 F/I	33-2273	
XJ8	4.0L V8 F/I	33-2190	
XJ8	4.2L V8 F/I	33-2273	
XJR	4.0L V8 F/I - to 5/03	33-2190	
XK8	4.0L V8 F/I	33-2190	
XK8	4.2L V8 F/I	33-2190	HP-1014
XK8-R	4.2L V8 F/I	33-2190	
XKR	4.2L V8 F/I	33-2190	HP-1014
X-Type	2.5L V6 F/I	33-2264	HP-2009
X-Type	3.0L V6 F/I	33-2264	HP-2009
2002 JAGUAR			
S-Type	3.0L V6 F/I	33-2266	HP-2009
S-Type	4.0L V8 F/I	33-2266	
S-Type	4.2L V8 F/I	33-2273	
XJ8	4.0L V8 F/I	33-2190	
XJR	4.0L V8 F/I	33-2190	
XK8	4.0L V8 F/I	33-2190	
XK8-R	4.2L V8 F/I	33-2190	
XKR	4.0L V8 F/I	33-2190	
X-Type	2.5L V6 F/I	33-2264	HP-2009
X-Type	3.0L V6 F/I	33-2264	HP-2009
2001 JAGUAR			
S-Type	3.0L V6 F/I	33-2266	HP-2009
S-Type	4.0L V8 F/I	33-2266	
XJ8	4.0L V8 F/I	33-2190	
XJR	4.0L V8 F/I	33-2190	
XK8	4.0L V8 F/I	33-2190	
XKR	4.0L V8 F/I	33-2190	
2000 JAGUAR			
S-Type	3.0L V6 F/I	33-2266	HP-2009
S-Type	4.0L V8 F/I	33-2266	
XJ8	3.2L V8 F/I	33-2190	
XJ8	4.0L V8 F/I	33-2190	
XJR	4.0L V8 F/I	33-2190	
XK8	4.0L V8 F/I	33-2190	
XKR	4.0L V8 F/I	33-2190	
1999 JAGUAR			
XJ8	4.0L V8 F/I	33-2190	
XJR	4.0L V8 F/I	33-2190	
XK8	4.0L V8 F/I	33-2190	
1998 JAGUAR			
XJ8	4.0L V8 F/I	33-2190	
XJR	4.0L V8 F/I	33-2190	
XK8	4.0L V8 F/I	33-2190	
1997 JAGUAR			
XJ6	4.0L L6 F/I	33-2003	
XK8	4.0L V8 F/I	33-2190	
1996 JAGUAR			
XJ6	4.0L L6 F/I	33-2003	
XJR	4.0L L6 F/I	33-2003	
1995 JAGUAR			
XJ6	3.2L L6 F/I	33-2003	
XJ6	4.0L L6 F/I	33-2003	
XJ12	6.0L V12 F/I	33-2003	
XJR	4.0L L6 F/I	33-2003	
XJS	6.0L V12 F/I	33-2011	

*Indicates 2 filters required ♦ - Intake kit available - see page 80 Applications updated daily at knfilters.com

Vehicle	Engine Type	Air Filter	Oil Filter
1994 JAGUAR			
XJ6	4.0L L6 F/I	33-2003	
XJ12	6.0L V12 F/I	33-2003	
XJS	6.0L V12 F/I	33-2011	
1993 JAGUAR			
XJ6	4.0L L6 F/I	33-2003	
XJS	6.0L V12 F/I	33-2011	
1992 JAGUAR			
XJS	5.3L V12 F/I	33-2011	
1991 JAGUAR			
XJ6	4.0L L6 F/I	33-2003	
XJS	5.3L V12 F/I	33-2011	
1990 JAGUAR			
XJ6	4.0L L6 F/I	33-2003	
XJS	5.3L V12 F/I	33-2011	
1989 JAGUAR			
XJ6	3.6L L6 F/I	33-2003	
XJS	5.3L V12 F/I	33-2011	
1988 JAGUAR			
XJ6	3.6L L6 F/I	33-2003	
XJS	5.3L V12 F/I	33-2011	
1987 JAGUAR			
XJ6	4.2L L6 F/I	E-2350	
XJS	5.3L V12 F/I - w/Panel Filter	33-2011	
XJS	5.3L V12 F/I - w/Round Filter	E-2350	
1986 JAGUAR			
XJ6	4.2L L6 F/I	E-2350	
XJS	5.3L V12 F/I	33-2011	
1985 JAGUAR			
XJ6	3.4L L6 CARB	33-2011	
XJ6	4.2L L6 F/I	E-2350	
XJS	5.3L V12 F/I	33-2011	
1984 JAGUAR			
XJ6	3.4L L6 CARB	33-2011	
XJ6	4.2L L6 F/I	E-2350	
1978 JAGUAR			
XJ6	4.2L L6 CARB	33-2011	
XJ6	4.2L L6 F/I	E-2350	
1976 JAGUAR			
XJ6	4.2L L6 CARB	33-2011	
XJ6	4.2L L6 F/I	E-2350	
1973 JAGUAR			
XJ12	5.3L V12 CARB - Non-US	33-2579	
XJ12	5.3L V12 CARB - US	33-2011	
1972 JAGUAR			
XKE	5.3L V12 CARB	33-2011*	
1971 JAGUAR			
XKE	4.2L L6 CARB	33-2011	
1970 JAGUAR			
XKE	4.2L L6 CARB	33-2011	
2013 JEEP			
Compass	2.0L L4 F/I	E-1998	HP-1017
Compass	2.4L L4 F/I	E-1998	HP-1017
Grand Cherokee	3.6L V6 F/I	33-2457 ♦	
Grand Cherokee	5.7L V8 F/I	33-2457 ♦	HP-2010
2013 JEEP			
Grand Cherokee	6.4L V8 F/I	33-2457	HP-2010
Patriot	2.0L L4 F/I	E-1998	HP-1017
Patriot	2.4L L4 F/I	E-1998	HP-1017
Wrangler	3.6L V6 F/I	33-2364 ♦	
2012 JEEP			
Compass	2.0L L4 F/I	E-1998	HP-1017
Compass	2.4L L4 F/I	E-1998	HP-1017
Grand Cherokee	3.6L V6 F/I	33-2457 ♦	
Grand Cherokee	5.7L V8 F/I	33-2457 ♦	HP-2010
Grand Cherokee	6.4L V8 F/I	33-2457	HP-2010
Liberty	3.7L V6 F/I	33-2363 ♦	HP-2011
Patriot	2.0L L4 F/I	E-1998	HP-1017
Patriot	2.4L L4 F/I	E-1998	HP-1017
Wrangler	3.6L V6 F/I	33-2364 ♦	
Wrangler	3.8L V6 F/I	33-2364	HP-1002
2011 JEEP			
Cherokee	3.7L V6 F/I	33-2363	
Compass	2.0L L4 F/I	E-1998	HP-1017
Compass	2.1L L4 DSL	E-1998	
Compass	2.4L L4 F/I	E-1998	HP-1017
Grand Cherokee	3.6L V6 F/I	33-2457 ♦	
Grand Cherokee	5.7L V8 F/I	33-2457 ♦	HP-2010
Liberty	3.7L V6 F/I	33-2363 ♦	HP-2011
Patriot	2.0L L4 F/I	E-1998	HP-1017
Patriot	2.1L L4 DSL	E-1998	
Patriot	2.4L L4 F/I	E-1998	HP-1017
Wrangler	3.8L V6 F/I	33-2364 ♦	HP-1002
2010 JEEP			
Cherokee	3.7L V6 F/I	33-2363	
Commander	3.7L V6 F/I	33-2233 ♦	HP-2011
Commander	5.7L V8 F/I	33-2233 ♦	HP-2010
Compass	2.0L L4 F/I	33-2362 ♦	HP-1017
Compass	2.1L L4 DSL	E-1998	
Compass	2.4L L4 F/I	33-2362 ♦	HP-1017
Grand Cherokee	3.7L V6 F/I	33-2233 ♦	HP-2011
Grand Cherokee	5.7L V8 F/I	33-2233 ♦	HP-2010
Grand Cherokee	6.1L V8 F/I	33-2233 ♦	HP-2010
Grand Cherokee III	3.0L V6 DSL	33-2420	
Liberty	3.7L V6 F/I	33-2363 ♦	HP-2011
Patriot	2.0L L4 F/I	33-2362 ♦	HP-1017
Patriot	2.1L L4 DSL	E-1998	
Patriot	2.4L L4 F/I	33-2362 ♦	HP-1017
Wrangler	3.8L V6 F/I	33-2364 ♦	HP-1002
2009 JEEP			
Cherokee	3.7L V6 F/I	33-2363	
Commander	3.7L V6 F/I	33-2233 ♦	HP-2011
Commander	4.7L V8 F/I	33-2233 ♦	HP-2010
Commander	5.7L V8 F/I	33-2233 ♦	HP-2010
Compass	2.0L L4 DSL	33-2362	
Compass	2.0L L4 F/I	33-2362 ♦	HP-1017
Compass	2.4L L4 F/I	33-2362 ♦	HP-1017
Grand Cherokee	3.0L V6 DSL	33-2420	
Grand Cherokee	3.7L V6 F/I	33-2233 ♦	HP-2011
Grand Cherokee	4.7L V8 F/I	33-2233 ♦	HP-2010
Grand Cherokee	5.7L V8 F/I	33-2233 ♦	HP-2010
Grand Cherokee	6.1L V8 F/I	33-2233 ♦	HP-2010
Liberty	3.7L V6 F/I	33-2363 ♦	HP-2011
Patriot	2.0L L4 DSL	33-2362	
Patriot	2.0L L4 F/I	33-2362 ♦	HP-1017
Patriot	2.4L L4 F/I	33-2362 ♦	HP-1017
Wrangler	3.8L V6 F/I	33-2364 ♦	HP-1002

*Indicates 2 filters required ♦ - Intake kit available - see page 80 Applications updated daily at knfilters.com

AIR & OIL FILTERS

Vehicle	Engine Type	Air Filter	Oil Filter
2008 JEEP			
Cherokee	2.8L L4 DSL	33-2363	
Cherokee	3.7L V6 F/I	33-2363	
Commander	3.0L V6 DSL	33-2420	
Commander	3.7L V6 F/I	33-2233 ♦	HP-2009
Commander	4.7L V8 F/I	33-2233 ♦	HP-2010
Commander	5.7L V8 F/I	33-2233 ♦	HP-2010
Compass	2.0L L4 DSL	33-2362	
Compass	2.0L L4 F/I	33-2362 ♦	HP-1017
Compass	2.4L L4 F/I	33-2362 ♦	HP-1017
Grand Cherokee	3.0L V6 DSL	33-2420	
Grand Cherokee	3.7L V6 F/I	33-2233 ♦	HP-2009
Grand Cherokee	4.7L V8 F/I	33-2233 ♦	HP-2010
Grand Cherokee	5.7L V8 F/I	33-2233 ♦	HP-2010
Grand Cherokee	6.1L V8 F/I	33-2233 ♦	
Grand Cherokee	6.1L V8 F/I - 22mm Thread	33-2233	HP-2010
Grand Cherokee	6.1L V8 F/I - 3/4 thread	33-2233	HP-2004
Grand Cherokee III	3.7L V6 F/I	33-2233	HP-2009
Grand Cherokee III	4.7L V8 F/I	33-2233	HP-2010
Grand Cherokee III	5.7L V8 F/I	33-2233	HP-2010
Grand Cherokee III	6.1L V8 F/I	33-2233	
Grand Cherokee III	6.1L V8 F/I - 22mm Thread	33-2233	HP-2010
Grand Cherokee III	6.1L V8 F/I - 3/4 thread	33-2233	HP-2004
Liberty	3.7L V6 F/I	33-2363 ♦	HP-2009
Patriot	2.0L L4 DSL	33-2362	
Patriot	2.0L L4 F/I	33-2362 ♦	HP-1017
Patriot	2.4L L4 F/I	33-2362 ♦	HP-1017
Wrangler	3.8L V6 F/I	33-2364 ♦	HP-1002
Wrangler II	3.8L V6 F/I	33-2364	HP-1002
2007 JEEP			
Commander	3.0L V6 DSL	33-2420	
Commander	3.7L V6 F/I	33-2233 ♦	HP-2009
Commander	4.7L V8 F/I	33-2233 ♦	HP-2004
Commander	5.7L V8 F/I	33-2233 ♦	HP-2004
Compass	2.0L L4 DSL	33-2362	
Compass	2.0L L4 F/I	33-2362 ♦	HP-1017
Compass	2.4L L4 F/I	33-2362 ♦	HP-1017
Grand Cherokee	3.0L V6 DSL	33-2233	
Grand Cherokee	3.7L V6 F/I	33-2233 ♦	HP-2009
Grand Cherokee	4.7L V8 F/I	33-2233 ♦	HP-2004
Grand Cherokee	5.7L V8 F/I	33-2233 ♦	HP-2004
Grand Cherokee	6.1L V8 F/I	33-2233 ♦	HP-2004
Grand Cherokee III	3.0L V6 DSL	33-2233	
Grand Cherokee III	3.7L V6 F/I	33-2233	HP-2009
Grand Cherokee III	4.7L V8 F/I	33-2233	HP-2004
Grand Cherokee III	5.7L V8 F/I	33-2233 ♦	HP-2004
Grand Cherokee III	6.1L V8 F/I	33-2233	HP-2004
Liberty	2.8L L4 DSL	33-2233	
Liberty	3.7L V6 F/I	33-2233 ♦	HP-2009
Patriot	2.0L L4 DSL	33-2362	
Patriot	2.0L L4 F/I	33-2362	HP-1017
Patriot	2.4L L4 F/I	33-2362 ♦	HP-1017
Wrangler	3.8L V6 F/I	33-2364 ♦	HP-1002
Wrangler II	3.8L V6 F/I	33-2364	HP-1002
2006 JEEP			
Commander	3.0L V6 DSL	33-2420	
Commander	3.7L V6 F/I	33-2233 ♦	HP-2009
Commander	4.7L V8 F/I	33-2233 ♦	HP-2004
Commander	5.7L V8 F/I	33-2233 ♦	HP-2004
Grand Cherokee	3.7L V6 F/I	33-2233 ♦	HP-2009
Grand Cherokee	4.7L V8 F/I	33-2233 ♦	HP-2004
Grand Cherokee	5.7L V8 F/I	33-2233 ♦	HP-2004
Grand Cherokee	6.1L V8 F/I	33-2233 ♦	HP-2004
2006 JEEP			
Grand Cherokee III	3.0L V6 DSL	33-2233	
Grand Cherokee III	3.7L V6 F/I	33-2233	HP-2009
Grand Cherokee III	4.7L V8 F/I	33-2233	HP-2004
Grand Cherokee III	5.7L V8 F/I	33-2233 ♦	HP-2004
Grand Cherokee III	6.1L V8 F/I	33-2233	HP-2004
Liberty	2.8L L4 DSL	33-2233	HP-1012
Liberty	3.7L V6 F/I	33-2233 ♦	HP-2009
TJ	2.4L L4 F/I	33-2261	HP-1002
TJ	4.0L L6 F/I	33-2114 ♦	HP-2004
Wrangler	2.4L L4 F/I	33-2261	HP-1002
Wrangler	4.0L L6 F/I	33-2114 ♦	HP-2004
Wrangler II	2.4L L4 F/I	33-2261	HP-1002
Wrangler II	4.0L L6 F/I	33-2114	HP-2004
2005 JEEP			
Cherokee	2.5L L4 DSL	33-2233	
Grand Cherokee	3.7L V6 F/I	33-2233 ♦	HP-2009
Grand Cherokee	4.7L V8 F/I	33-2233 ♦	HP-2004
Grand Cherokee	5.7L V8 F/I	33-2233 ♦	HP-2004
Grand Cherokee II	2.7L L5 DSL	33-2139	
Grand Cherokee III	3.0L V6 DSL	33-2233	
Grand Cherokee III	3.7L V6 F/I	33-2233	HP-2009
Grand Cherokee III	4.7L V8 F/I	33-2233	HP-2004
Grand Cherokee III	5.7L V8 F/I	33-2233 ♦	HP-2004
Liberty	2.4L L4 F/I	33-2261	HP-1002
Liberty	2.8L L4 DSL	33-2233	HP-1012
Liberty	3.7L V6 F/I	33-2233 ♦	HP-2009
TJ	2.4L L4 F/I	33-2261	HP-1002
TJ	4.0L L6 F/I	33-2114 ♦	HP-2004
Wrangler	2.4L L4 F/I	33-2261	HP-1002
Wrangler	4.0L L6 F/I	33-2114 ♦	HP-2004
Wrangler II	2.4L L4 F/I	33-2261	HP-1002
Wrangler II	4.0L L6 F/I	33-2114	HP-2004
2004 JEEP			
Cherokee	3.7L V6 F/I	33-2233	
Grand Cherokee	4.0L L6 F/I	33-2139 ♦	HP-2004
Grand Cherokee	4.7L V8 F/I		HP-2004
Grand Cherokee	4.7L V8 F/I - High Output	33-2246 ♦	HP-2004
Grand Cherokee	4.7L V8 F/I - w/o High Output	33-2139 ♦	HP-2004
Grand Cherokee II	2.7L L5 DSL	33-2139	
Grand Cherokee II	4.0L L6 F/I	33-2139	HP-2004
Grand Cherokee II	4.7L V8 F/I		HP-2004
Grand Cherokee II	4.7L V8 F/I - Exc., High Output	33-2139	HP-2004
Grand Cherokee II	4.7L V8 F/I - High Output	33-2246	HP-2004
Liberty	2.4L L4 F/I	33-2261	HP-1002
Liberty	2.8L L4 DSL	33-2233	
Liberty	3.7L V6 F/I	33-2233 ♦	HP-2009
TJ	2.4L L4 F/I	33-2261	HP-1002
TJ	4.0L L6 F/I	33-2114 ♦	HP-2004
Wrangler	2.4L L4 F/I	33-2261	HP-1002
Wrangler	4.0L L6 F/I	33-2114 ♦	HP-2004
Wrangler II	2.4L L4 F/I	33-2261	HP-1002
Wrangler II	4.0L L6 F/I	33-2114	HP-2004
2003 JEEP			
Grand Cherokee	4.0L L6 F/I	33-2139 ♦	HP-2004
Grand Cherokee	4.7L V8 F/I		HP-2004
Grand Cherokee	4.7L V8 F/I - High Output	33-2246 ♦	HP-2004
Grand Cherokee	4.7L V8 F/I - w/o High Output	33-2139 ♦	HP-2004
Grand Cherokee II	2.7L L5 DSL	33-2139	
Grand Cherokee II	4.0L L6 F/I	33-2139	HP-2004

*Indicates 2 filters required ♦ - Intake kit available - see page 80 Applications updated daily at knfilters.com

Partial Listing - Complete List of Vehicles and Applications at knfilters.com

Vehicle	Engine Type	Air Filter	Oil Filter
2003 JEEP			
Grand Cherokee II	4.7L V8 F/I		HP-2004
Grand Cherokee II	4.7L V8 F/I - Exc., High Output	33-2139	HP-2004
Grand Cherokee II	4.7L V8 F/I - High Output	33-2246	HP-2004
Liberty	2.4L L4 F/I	33-2261	HP-1002
Liberty	2.5L L4 DSL	33-2233	
Liberty	2.8L L4 DSL	33-2233	
Liberty	3.7L V6 F/I	33-2233 ♦	HP-2009
TJ	2.4L L4 F/I	33-2261	HP-1002
TJ	4.0L L6 F/I	33-2114 ♦	HP-2004
Wrangler	2.4L L4 F/I	33-2261	HP-1002
Wrangler	4.0L L6 F/I	33-2114 ♦	HP-2004
Wrangler II	2.4L L4 F/I	33-2261	HP-1002
Wrangler II	4.0L L6 F/I	33-2114	HP-2004
2002 JEEP			
Cherokee	2.4L L4 F/I	33-2261	
Cherokee	3.7L V6 F/I	33-2233	
Grand Cherokee	4.0L L6 F/I	33-2139 ♦	HP-2004
Grand Cherokee	4.7L V8 F/I		HP-2004
Grand Cherokee	4.7L V8 F/I - High Output	33-2246 ♦	HP-2004
Grand Cherokee	4.7L V8 F/I - w/o High Output	33-2139 ♦	HP-2004
Grand Cherokee II	2.7L L5 DSL	33-2139	
Grand Cherokee II	4.0L L6 F/I	33-2139	HP-2004
Grand Cherokee II	4.7L V8 F/I		HP-2004
Grand Cherokee II	4.7L V8 F/I - Exc., High Output	33-2139	HP-2004
Grand Cherokee II	4.7L V8 F/I - High Output	33-2246	HP-2004
Liberty	2.4L L4 F/I	33-2261	HP-1002
Liberty	2.5L L4 DSL	33-2233	
Liberty	2.8L L4 DSL	33-2233	
Liberty	3.7L V6 F/I	33-2233 ♦	HP-2009
TJ	2.5L L4 F/I	33-2114	HP-2004
TJ	4.0L L6 F/I	33-2114 ♦	HP-2004
Wrangler	2.5L L4 F/I	33-2114	HP-2004
Wrangler	4.0L L6 F/I	33-2114 ♦	HP-2004
Wrangler II	2.4L L4 F/I	33-2261	HP-1002
Wrangler II	2.5L L4 F/I	33-2114	HP-2004
Wrangler II	4.0L L6 F/I	33-2114	HP-2004
2001 JEEP			
Cherokee	2.1L L4 DSL	E-2402	
Cherokee	4.0L L6 F/I	33-2122 ♦	HP-2004
Grand Cherokee	4.0L L6 F/I	33-2139 ♦	HP-2004
Grand Cherokee	4.7L V8 F/I	33-2139 ♦	HP-2004
Grand Cherokee II	2.7L L5 DSL	33-2139	
Grand Cherokee II	3.1L V6 DSL	33-2139	HP-7005
Grand Cherokee II	4.0L L6 F/I	33-2139	HP-2004
Grand Cherokee II	4.7L V8 F/I		HP-2004
Grand Cherokee II	4.7L V8 F/I - Exc., High Output	33-2139	HP-2004
Grand Cherokee II	4.7L V8 F/I - High Output	33-2246	HP-2004
Liberty	3.7L V6 F/I	33-2233	
TJ	2.5L L4 F/I	33-2114	HP-2004
TJ	4.0L L6 F/I	33-2114 ♦	HP-2004
Wrangler	2.5L L4 F/I	33-2114	HP-2004
Wrangler	4.0L L6 F/I	33-2114 ♦	HP-2004
Wrangler II	2.5L L4 F/I	33-2114	HP-2004
Wrangler II	4.0L L6 F/I	33-2114	HP-2004
2000 JEEP			
Cherokee	2.5L L4 F/I		HP-2004
Cherokee	2.5L L4 F/I - Non-US	33-2018	HP-2004
Cherokee	2.5L L4 F/I - US	33-2122	HP-2004
Cherokee	4.0L L6 F/I	33-2122 ♦	HP-2004
Grand Cherokee	4.0L L6 F/I	33-2139 ♦	HP-2004
Grand Cherokee	4.7L V8 F/I	33-2139 ♦	HP-2004
Grand Cherokee II	3.1L V6 DSL	33-2139	HP-7005
Grand Cherokee II	4.0L L6 F/I	33-2139	HP-2004
Grand Cherokee II	4.7L V8 F/I		HP-2004
Grand Cherokee II	4.7L V8 F/I - Exc., High Output	33-2139	HP-2004
Grand Cherokee II	4.7L V8 F/I - High Output	33-2246	HP-2004
TJ	2.5L L4 F/I	33-2114	HP-2004
TJ	4.0L L6 F/I	33-2114 ♦	HP-2004
Wrangler	2.5L L4 F/I	33-2114	HP-2004
Wrangler	4.0L L6 F/I	33-2114 ♦	HP-2004
Wrangler II	2.5L L4 F/I	33-2114	HP-2004
Wrangler II	4.0L L6 F/I	33-2114	HP-2004
1999 JEEP			
Cherokee	2.1L L4 DSL	E-2402	
Cherokee	2.5L L4 F/I		HP-2004
Cherokee	2.5L L4 F/I - Non-US	33-2018	HP-2004
Cherokee	2.5L L4 F/I - US	33-2122	HP-2004
Cherokee	4.0L L6 F/I	33-2122 ♦	HP-2004
Grand Cherokee	4.0L L6 F/I	33-2139 ♦	HP-2004
Grand Cherokee	4.7L V8 F/I	33-2139 ♦	HP-2004
Grand Cherokee I	2.5L L4 DSL	33-2048	
Grand Cherokee I	4.0L L6 F/I		HP-2004
Grand Cherokee I	4.0L L6 F/I - to 4/99	33-2048	HP-2004
Grand Cherokee I	5.2L V8 F/I	33-2048	
Grand Cherokee I	5.9L V8 F/I	33-2048	
Grand Cherokee II	3.1L V6 DSL	33-2139	HP-7005
Grand Cherokee II	4.0L L6 F/I		HP-2004
Grand Cherokee II	4.0L L6 F/I - from 5/99	33-2139	HP-2004
Grand Cherokee II	4.7L V8 F/I		HP-2004
Grand Cherokee II	4.7L V8 F/I - Exc., High Output	33-2139	HP-2004
Grand Cherokee II	4.7L V8 F/I - High Output	33-2246	HP-2004
TJ	2.5L L4 F/I	33-2114	HP-2004
TJ	4.0L L6 F/I	33-2114 ♦	HP-2004
Wrangler	2.5L L4 F/I	33-2114	HP-2004
Wrangler	4.0L L6 F/I	33-2114 ♦	HP-2004
Wrangler II	2.5L L4 F/I	33-2114	HP-2004
Wrangler II	4.0L L6 F/I	33-2114	HP-2004
1998 JEEP			
Cherokee	2.1L L4 DSL	E-2402	
Cherokee	2.5L L4 F/I		HP-2004
Cherokee	2.5L L4 F/I - Non-US	33-2018	HP-2004
Cherokee	2.5L L4 F/I - US	33-2122	HP-2004
Cherokee	4.0L L6 F/I	33-2122 ♦	HP-2004
Grand Cherokee	4.0L L6 F/I	33-2048 ♦	HP-2004
Grand Cherokee	5.2L V8 F/I	33-2048 ♦	HP-2004
Grand Cherokee	5.9L V8 F/I	33-2048 ♦	HP-2004
Grand Cherokee I	2.5L L4 DSL	33-2048	
Grand Cherokee I	4.0L L6 F/I	33-2048	HP-2004
Grand Cherokee I	5.2L V8 F/I	33-2048	HP-2004
Grand Cherokee I	5.9L V8 F/I	33-2048	HP-2004
TJ	2.5L L4 F/I	33-2114	HP-2004
TJ	4.0L L6 F/I	33-2114 ♦	HP-2004
Wrangler	2.5L L4 F/I	33-2114	HP-2004
Wrangler	4.0L L6 F/I	33-2114 ♦	HP-2004
Wrangler II	2.5L L4 F/I	33-2114	HP-2004
Wrangler II	4.0L L6 F/I	33-2114	HP-2004
1997 JEEP			
Cherokee	2.5L L4 F/I		HP-2004

*Indicates 2 filters required ♦ - Intake kit available - see page 80 Applications updated daily at knfilters.com

AIR & OIL FILTERS

Vehicle	Engine Type	Air Filter	Oil Filter
1997 JEEP			
Cherokee	2.5L L4 F/I - Non-US	33-2018	HP-2004
Cherokee	2.5L L4 F/I - US	33-2122	HP-2004
Cherokee	4.0L L6 F/I	33-2122 ♦	HP-2004
Grand Cherokee	4.0L L6 F/I	33-2048 ♦	HP-2004
Grand Cherokee	5.2L V8 F/I	33-2048 ♦	HP-2004
Grand Cherokee I	2.5L L4 DSL	33-2048	
Grand Cherokee I	4.0L L6 F/I	33-2048	HP-2004
Grand Cherokee I	5.2L V8 F/I	33-2048	HP-2004
Grand Cherokee I	5.9L V8 F/I	33-2048	
TJ	2.5L L4 F/I		HP-2004
TJ	2.5L L4 F/I - OEM 4797777	33-2114	HP-2004
TJ	2.5L L4 F/I - OEM 53002184	33-2046	HP-2004
TJ	4.0L L6 F/I		HP-2004
TJ	4.0L L6 F/I - OEM 4797777	33-2114 ♦	HP-2004
TJ	4.0L L6 F/I - OEM 53002184	33-2046 ♦	HP-2004
Wrangler	2.5L L4 F/I		HP-2004
Wrangler	2.5L L4 F/I - OEM 4797777	33-2114	HP-2004
Wrangler	2.5L L4 F/I - OEM 53002184	33-2046	HP-2004
Wrangler	4.0L L6 F/I		HP-2004
Wrangler	4.0L L6 F/I - OEM 4797777	33-2114 ♦	HP-2004
Wrangler	4.0L L6 F/I - OEM 53002184	33-2046 ♦	HP-2004
Wrangler II	2.5L L4 F/I	33-2114	HP-2004
Wrangler II	4.0L L6 F/I	33-2114	HP-2004
1996 JEEP			
Cherokee	2.5L L4 F/I		HP-2004
Cherokee	2.5L L4 F/I - Non-US	33-2018	HP-2004
Cherokee	2.5L L4 F/I - US	33-2122	HP-2004
Cherokee	4.0L L6 F/I	33-2122 ♦	HP-2004
Grand Cherokee	4.0L L6 F/I	33-2048 ♦	HP-2004
Grand Cherokee	5.2L V8 F/I	33-2048 ♦	HP-2004
Grand Cherokee I	2.5L L4 DSL	33-2048	
Grand Cherokee I	4.0L L6 F/I	33-2048	HP-2004
Grand Cherokee I	5.2L V8 F/I	33-2048	HP-2004
Wrangler I	2.5L L4 F/I		HP-2004
Wrangler I	2.5L L4 F/I - to 8/96	33-2046	HP-2004
Wrangler I	4.0L L6 F/I	33-2046	HP-2004
Wrangler II	2.5L L4 F/I		HP-2004
Wrangler II	2.5L L4 F/I - from 9/96	33-2114	HP-2004
Wrangler II	4.0L L6 F/I	33-2114	HP-2004
1995 JEEP			
Cherokee	2.5L L4 F/I	33-2018	HP-2004
Cherokee	4.0L L6 F/I	33-2018 ♦	HP-2004
Grand Cherokee	4.0L L6 F/I	33-2048 ♦	HP-2004
Grand Cherokee	5.2L V8 F/I	33-2048 ♦	HP-2004
Grand Cherokee I	2.5L L4 DSL	33-2048	
Grand Cherokee I	4.0L L6 F/I	33-2048	HP-2004
Grand Cherokee I	5.2L V8 F/I	33-2048	HP-2004
Wrangler	2.5L L4 F/I	33-2046	HP-2004
Wrangler	4.0L L6 F/I	33-2046	HP-2004
		33-2046 ♦	HP-2004
Wrangler I	2.5L L4 F/I	33-2046	HP-2004
Wrangler I	4.0L L6 F/I	33-2046	HP-2004
1994 JEEP			
Cherokee	2.5L L4 F/I	33-2018	HP-2004
Cherokee	4.0L L6 F/I	33-2018 ♦	HP-2004
Grand Cherokee	4.0L L6 F/I	33-2048 ♦	HP-2004
Grand Cherokee	5.2L V8 F/I	33-2048 ♦	HP-2004
Grand Cherokee I	4.0L L6 F/I	33-2048	HP-2004
Grand Cherokee I	5.2L V8 F/I	33-2048	HP-2004
Wrangler	2.5L L4 F/I	33-2046	HP-2004
Wrangler	4.0L L6 F/I	33-2046	HP-2004
		33-2046 ♦	HP-2004
Wrangler I	2.5L L4 F/I	33-2046	HP-2004
Wrangler I	4.0L L6 F/I	33-2046	HP-2004
1993 JEEP			
Cherokee	2.5L L4 F/I	33-2018	
Cherokee	2.5L L4 F/I - 3/4 thread	33-2018	HP-2004
Cherokee	2.5L L4 F/I - w/20mm Thd.	33-2018	HP-2007
Cherokee	4.0L L6 F/I	33-2018 ♦	HP-2004
Grand Cherokee	4.0L L6 F/I	33-2048 ♦	HP-2004
Grand Cherokee	5.2L V8 F/I	33-2048 ♦	HP-2004
Grand Cherokee I	4.0L L6 F/I	33-2048	HP-2004
Grand Cherokee I	5.2L V8 F/I	33-2048	HP-2004
Wrangler	2.5L L4 F/I	33-2046	
Wrangler	2.5L L4 F/I - 3/4 thread	33-2046	HP-2004
Wrangler	2.5L L4 F/I - w/20mm Thd.	33-2046	HP-2007
Wrangler	4.0L L6 F/I	33-2046	HP-2004
		33-2046 ♦	HP-2004
Wrangler I	2.5L L4 F/I	33-2046	
Wrangler I	2.5L L4 F/I - 3/4 thread	33-2046	HP-2004
Wrangler I	2.5L L4 F/I - w/20mm Thd.	33-2046	HP-2007
Wrangler I	4.0L L6 F/I	33-2046	HP-2004
1992 JEEP			
Cherokee	2.5L L4 F/I	33-2018	HP-2004
Cherokee	4.0L L6 F/I	33-2018 ♦	HP-2004
Comanche	4.0L L6 F/I	33-2018	HP-2004
Grand Cherokee I	4.0L L6 F/I	33-2048	
Wrangler	2.5L L4 F/I	33-2046	HP-2004
Wrangler	4.0L L6 F/I	33-2046 ♦	HP-2004
Wrangler I	2.5L L4 F/I	33-2046	HP-2004
Wrangler I	4.0L L6 F/I	33-2046	HP-2004
1991 JEEP			
Cherokee	2.5L L4 F/I	33-2018	HP-2004
Cherokee	4.0L L6 F/I	33-2018 ♦	HP-2004
Comanche	4.0L L6 F/I	33-2018	HP-2004
Grand Cherokee I	4.0L L6 F/I	33-2048	
Grand Wagoneer	5.9L V8 CARB	E-1100	HP-2004
Wrangler	2.5L L4 F/I	33-2046	HP-2004
Wrangler	4.0L L6 F/I	33-2046 ♦	HP-2004
Wrangler I	2.5L L4 F/I	33-2046	HP-2004
Wrangler I	4.0L L6 F/I	33-2046	HP-2004
1990 JEEP			
Cherokee	2.5L L4 F/I	33-2018	HP-2007
Cherokee	4.0L L6 F/I	33-2018	HP-2007
Comanche	4.0L L6 F/I	33-2018	HP-2007
Grand Wagoneer	5.9L V8 CARB	E-1100	HP-2007
Wagoneer	4.0L L6 F/I	33-2018	HP-2007
Wrangler	2.5L L4 F/I	33-2046	HP-2007
Wrangler	4.2L L6 CARB	E-1080	HP-2007
Wrangler I	2.5L L4 F/I	33-2046	HP-2007
Wrangler I	4.2L L6 CARB	E-1080	HP-2007
Wrangler I	4.2L L6 F/I	33-2046	
1989 JEEP			
Cherokee	2.5L L4 F/I	33-2018	HP-2007
Cherokee	4.0L L6 F/I	33-2018	HP-2007
Comanche	4.0L L6 F/I	33-2018	HP-2007
Grand Wagoneer	5.9L V8 CARB	E-1100	HP-2007
Wagoneer	4.0L L6 F/I	33-2018	HP-2007

*Indicates 2 filters required ♦ - Intake kit available - see page 80 Applications updated daily at knfilters.com

Partial Listing - Complete List of Vehicles and Applications at knfilters.com

Vehicle	Engine Type	Air Filter	Oil Filter
1989 JEEP			
Wrangler	2.5L L4 F/I	33-2046	HP-2007
Wrangler	4.2L L6 CARB	E-1080	HP-2007
Wrangler I	2.5L L4 F/I	33-2046	HP-2007
Wrangler I	4.2L L6 CARB	E-1080	HP-2007
Wrangler I	4.2L L6 F/I	33-2046	
1988 JEEP			
Cherokee	2.5L L4 F/I	33-2018	HP-2007
Cherokee	4.0L L6 F/I	33-2018	HP-2007
Comanche	2.5L L4 F/I	33-2018	HP-2007
Comanche	4.0L L6 F/I	33-2018	HP-2007
Grand Wagoneer	5.9L V8 CARB	E-1100	HP-2007
Wagoneer	4.0L L6 F/I	33-2018	HP-2007
Wrangler	2.5L L4 F/I	33-2046	HP-2007
Wrangler	4.2L L6 CARB	E-1080	HP-2007
Wrangler I	2.5L L4 F/I	33-2046	HP-2007
Wrangler I	4.2L L6 CARB	E-1080	HP-2007
Wrangler I	4.2L L6 F/I	33-2046	
1987 JEEP			
Cherokee	2.5L L4 F/I	33-2018	HP-2007
Cherokee	4.0L L6 F/I	33-2018	HP-2007
CJ7	4.2L L6 CARB	E-1080	
Comanche	2.5L L4 F/I		HP-2007
Comanche	4.0L L6 F/I	33-2018	HP-2007
Grand Wagoneer	5.9L V8 CARB	E-1100	HP-2007
Wagoneer	4.0L L6 F/I	33-2018	HP-2007
Wrangler	2.5L L4 F/I	33-2046	HP-2007
Wrangler	4.2L L6 CARB	E-1080	HP-2007
Wrangler I	2.5L L4 F/I	33-2046	HP-2007
Wrangler I	4.2L L6 CARB	E-1080	HP-2007
Wrangler I	4.2L L6 F/I	33-2046	
1986 JEEP			
Cherokee	2.5L L4 F/I	33-2046	HP-1001
Cherokee	2.8L V6 CARB	E-1080	HP-1001
CJ7	4.2L L6 CARB	E-1080	HP-1007
CJ8	4.2L L6 CARB	E-1080	
Comanche	2.5L L4 F/I	33-2046	HP-1001
Comanche	2.8L V6 CARB	E-1080	HP-1001
Grand Wagoneer	5.9L V8 CARB	E-1100	HP-1007
Wrangler I	4.2L L6 CARB	E-1080	HP-2007
Wrangler I	4.2L L6 F/I	33-2046	
1985 JEEP			
Cherokee	2.5L L4 CARB	E-1200	HP-1001
Cherokee	2.8L V6 CARB	E-1080	HP-1001
CJ7	2.5L L4 CARB	E-1080	HP-1001
CJ7	4.2L L6 CARB	E-1080	HP-1007
Grand Wagoneer	5.9L V8 CARB	E-1100	HP-1007
1984 JEEP			
Cherokee	5.9L	E-1100	
CJ7	2.5L L4 CARB	E-1080	HP-1001
CJ7	4.2L L6 CARB	E-1080	HP-1007
CJ8	4.2L L6 CARB	E-1080	
Grand Wagoneer	5.9L V8 CARB	E-1100	HP-1007
Scrambler	4.2L L6 CARB		HP-1007
1983 JEEP			
CJ5	4.2L L6 CARB	E-1080	HP-1007
CJ7	2.5L L4 CARB	E-1080	HP-1001
CJ7	4.2L L6 CARB	E-1080	HP-1007
CJ8	4.2L L6 CARB	E-1080	
Wagoneer	5.9L V8 CARB	E-1100	HP-2003
1982 JEEP			
CJ5	2.5L L4 CARB	E-1080	HP-1001
CJ5	4.2L L6 CARB	E-1080	HP-2003
CJ7	4.2L L6 CARB	E-1080	HP-2003
Wagoneer	5.9L V8 CARB	E-1100	HP-2003
1981 JEEP			
CJ5	2.5L L4 CARB	E-1080	HP-1001
CJ5	4.2L L6 CARB	E-1080	HP-2003
CJ7	2.5L L4 CARB	E-1080	HP-1001
CJ7	4.2L L6 CARB	E-1080	HP-2003
CJ7	5.0L V8 CARB	E-1080	HP-2003
Wagoneer	5.9L V8 CARB	E-1100	HP-2003
1980 JEEP			
CJ5	2.5L L4 CARB	E-1080	HP-1001
CJ5	4.2L L6 CARB	E-1080	HP-2003
CJ5	5.0L V8 CARB	E-1100	HP-2003
CJ7	258 L6 CARB	E-1080	HP-2003
CJ7	5.0L V8 CARB	E-1100	HP-2003
1979 JEEP			
Cherokee	360 V8 CARB	E-1100	HP-2003
CJ5	258 L6 CARB	E-1080	HP-2003
CJ5	304 V8 CARB	E-1100	HP-2003
CJ7	258 L6 CARB	E-1080	HP-2003
CJ7	304 V8 CARB	E-1100	HP-2003
Wagoneer	360 V8 CARB	E-1100	HP-2003
1978 JEEP			
Cherokee	360 V8 2 BBL.	E-1100	HP-2003
Cherokee	360 V8 4 BBL.	E-1100	HP-2003
CJ5	232 L6 CARB	E-1080	HP-2003
CJ5	258 L6 CARB	E-1080	HP-2003
CJ5	304 V8 CARB	E-1100	HP-2003
CJ7	258 L6 CARB	E-1080	HP-2003
CJ7	304 V8 CARB	E-1100	HP-2003
Wagoneer	360 V8 CARB	E-1100	HP-2003
1977 JEEP			
CJ5	258 L6 CARB	E-1080	HP-2003
CJ5	304 V8 CARB	E-1100	HP-2003
CJ7	258 L6 CARB	E-1080	HP-2003
CJ7	304 V8 CARB	E-1100	HP-2003
1976 JEEP			
Cherokee	360 V8 CARB	E-1100	HP-2003
CJ5	232 L6 CARB	E-1080	HP-2003
CJ5	258 L6 CARB	E-1080	HP-2003
CJ5	304 V8 CARB		HP-2003
CJ7	258 L6 CARB	E-1080	HP-2003
CJ7	304 V8 CARB	E-1100	HP-2003
Wagoneer	360 V8 CARB	E-1100	HP-2003
1975 JEEP			
CJ5	258 L6 CARB	E-1080	HP-2003
CJ5	304 V8 CARB	E-1100	HP-2003
1974 JEEP			
CJ5	232 L6 CARB	E-1080	HP-2003
CJ5	258 L6 CARB	E-1080	HP-2003
CJ5	304 V8 CARB	E-1100	HP-2003
CJ7	304 V8 CARB	E-1100	
1973 JEEP			
CJ5	304 V8 CARB	E-1100	HP-2003
1972 JEEP			
CJ5	304 V8 CARB	E-1100	HP-2003
Wagoneer	360 V8 CARB	E-1100	HP-2003

*Indicates 2 filters required ♦ - Intake kit available - see page 80 Applications updated daily at knfilters.com

Vehicle	Engine Type	Air Filter	Oil Filter
1971 JEEP			
CJ5	225 V6 CARB		HP-2003
1970 JEEP			
CJ5	225 V6 CARB		HP-2003
1969 JEEP			
CJ5	225 V6 CARB		HP-2003
Jeepster	225 V6 CARB		HP-2003
1968 JEEP			
CJ5	225 V6 CARB		HP-2003
1974 JENSEN			
Healey	120 L4 CARB	E-2240	
1973 JENSEN			
Healey	120 L4 CARB	E-2240	
2005 JOHN DEERE			
Buck	500	BD-6502	KN-557
Buck EX	500	BD-6502	KN-557
Buck EXT	500	BD-6502	KN-557
Trail Buck 500	495	BD-6502	KN-557
Trail Buck 650	650	BD-6502	KN-556
Trail Buck 650 EX	650	BD-6502	KN-556
Trail Buck 650 EXT	650	BD-6502	KN-556
2013 KAWASAKI			
EX300R Ninja	296	KA-2508	
KAF400 Mule 610 4x4	400	KA-4093	KN-128
KFX450R	449	KA-4508	KN-112
KLR650	650	KA-6589	KN-123
KLX110	110	KA-1102	KN-112
KLX140	140	KA-1408	KN-112
KRT750 Teryx4	749	KA-7512	
KVF360 Prairie 4x4	360	KA-3603	KN-204
		KA-3603	KN-204C
KVF650 Brute Force 4x4i	650	KA-7504	KN-204
		KA-7504	KN-204C
KVF750 Brute Force 4x4i	749	KA-7408	KN-204
		KA-7408	KN-204C
KX85	85	KA-8088	
KX100	100	KA-8088	
KX250F	249	KA-2506XD	KN-207
KX450F	449	KA-2506XD	KN-112
ZG1400 Concours	1400		KN-303
			KN-303C
ZG1400 Concours	1400 - US	KA-1406	KN-303
ZX6R Ninja	636	KA-6009	KN-303
		KA-6009	KN-303C
ZX6R Ninja	636 - Race Specific	KA-6009R	KN-303
ZX10R Ninja	1000	KA-1011	KN-303
		KA-1011	KN-303C
ZX10R Ninja	1000 - Race Specific	KA-1011R	KN-303
ZX1000 Ninja	1043	KA-1111	KN-303
		KA-1111	KN-303C
2012 KAWASAKI			
1400GTR	1400		KN-303
			KN-303C
EX250R Ninja	250	KA-2508	KN-401
EX650R Ninja	650		KN-303
			KN-303C
KAF400 Mule 600	400	KA-4093	KN-128

Vehicle	Engine Type	Air Filter	Oil Filter
2012 KAWASAKI			
KAF400 Mule 610 4x4	400	KA-4093	KN-128
KAF620 Mule 4010 4x4	617	KA-6201	
KAF620 Mule 4010 Trans4x4	617	KA-6201	
KAF950 Mule 4010 Diesel 4x4	953	KA-6201	
KAF950 Mule 4010 Trans4x4 Diesel	950	KA-6201	
KFX450R	449	KA-4508	KN-112
KLE650 Versys	650		KN-303
			KN-303C
KLR650	650	KA-6589	KN-123
KLX110	110	KA-1102	KN-112
KLX140	140	KA-1408	KN-112
KLX140L	140	KA-1408	KN-112
KLX250S	250		KN-112
KLX450R	450		KN-112
KRF750 Teryx FI 4x4	750	KA-7508	KN-204
		KA-7508	KN-204C
KRF750 Teryx FI 4x4 LE	750	KA-7508	KN-204
		KA-7508	KN-204C
KRF750 Teryx FI 4x4 Sport	750	KA-7508	KN-204
		KA-7508	KN-204C
KRT750 Teryx4	749	KA-7512	
KVF360 Prairie 4x4	360	KA-3603	KN-204
		KA-3603	KN-204C
KVF650 Brute Force 4x4	650	KA-6503	KN-204
		KA-6503	KN-204C
KVF650 Brute Force 4x4i	650	KA-7504	KN-204
		KA-7504	KN-204C
KVF750 Brute Force 4x4i	749	KA-7408	KN-204
		KA-7408	KN-204C
KX65	65	KA-8088	
KX85	85	KA-8088	
KX100	100	KA-8088	
KX250F	249	KA-2506XD	KN-207
KX450F	449	KA-2506XD	KN-112
Versys 1000	1000	KA-1111	
VN900 Vulcan Classic	903	KA-9006	KN-303
		KA-9006	KN-303C
VN900 Vulcan Classic LT	903	KA-9006	KN-303
		KA-9006	KN-303C
VN900 Vulcan Custom	903	KA-9006	KN-303
		KA-9006	KN-303C
VN1700 Vulcan Classic	1700	KA-1709	KN-303
		KA-1709	KN-303C
VN1700 Vulcan Nomad	1700	KA-1709	KN-303

*Indicates 2 filters required ♦ - Intake kit available - see page 80 Applications updated daily at knfilters.com

2012 KAWASAKI

Vehicle	Engine Type	Air Filter	Oil Filter
VN1700 Vulcan Nomad	1700	KA-1709	KN-303C
VN1700 Vulcan Vaquero	1700	KA-1709	KN-303
		KA-1709	KN-303C
VN1700 Vulcan Voyager	1700	KA-1709	KN-303
		KA-1709	KN-303C
Z750	750	KA-1003	KN-303
		KA-1003	KN-303C
Z750R	750	KA-1003	KN-303
		KA-1003	KN-303C
Z1000	1000	KA-1111	KN-303
		KA-1111	KN-303C
Z1000 SX	1000	KA-1111	KN-303
		KA-1111	KN-303C
ZG1400 Concours ABS	1400		KN-303
			KN-303C
ZG1400 Concours ABS	1400 - US	KA-1406	KN-303
ZX6R Ninja	599	KA-6009	KN-303
		KA-6009	KN-303C
ZX6R Ninja	599 - Race Specific	KA-6009R	KN-303
ZX10R Ninja	1000	KA-1011	KN-303
		KA-1011	KN-303C
ZX10R Ninja	1000 - Race Specific	KA-1011R	KN-303
ZX1000 Ninja	1043	KA-1111	KN-303
		KA-1111	KN-303C
ZZR1400	1400		KN-303
			KN-303C

2011 KAWASAKI

Vehicle	Engine Type	Air Filter	Oil Filter
1400GTR	1400	KA-1406	KN-303
		KA-1406	KN-303C
ER6n	650		KN-303
			KN-303C
EX250R Ninja	250	KA-2508	KN-401
EX650R Ninja	650		KN-303
			KN-303C
KAF400 Mule 600	400	KA-4093	KN-128
KAF400 Mule 610 4x4	400	KA-4093	KN-128
KAF620 Mule 4010 Trans4x4	617	KA-6201	
KAF950 Mule 4010 Trans4x4 Diesel	950	KA-6201	
KFX450R	449	KA-4508	KN-112
KFX700	700	KA-6503	
KLE650 Versys	650		KN-303
			KN-303C
KLF250 Bayou	250	KA-2288	KN-123
KLR650	650	KA-6589	KN-123
KLX110	110	KA-1102	KN-112
KLX125 D-Tracker	125	KA-1408	KN-112
KLX140	140	KA-1408	KN-112
KLX140L	140	KA-1408	KN-112
KLX450R	450	KA-4408	KN-112
KRF750 Teryx FI 4x4	750	KA-7508	KN-204
		KA-7508	KN-204C
KRF750 Teryx FI 4x4 LE	750	KA-7508	KN-204
		KA-7508	KN-204C

2011 KAWASAKI

Vehicle	Engine Type	Air Filter	Oil Filter
KRF750 Teryx FI 4x4 Sport	750	KA-7508	KN-204
		KA-7508	KN-204C
KVF360 Prairie 4x4	360	KA-3603	KN-204
		KA-3603	KN-204C
KVF360 Prairie 4x4 Hardwoods Green HD	360	KA-3603	KN-204
		KA-3603	KN-204C
KVF650 Brute Force 4x4	650	KA-6503	KN-204
		KA-6503	KN-204C
KVF650 Brute Force 4x4i	650	KA-7504	KN-204
		KA-7504	KN-204C
KVF750 Brute Force 4x4i	749	KA-7408	KN-204
		KA-7408	KN-204C
KX65	65	KA-8088	
KX85	85	KA-8088	
KX100	100	KA-8088	
KX250F	250	KA-2506XD	KN-207
KX450F	450	KA-2506XD	KN-112
VN900 Vulcan Classic	903	KA-9006	KN-303
		KA-9006	KN-303C
VN900 Vulcan Classic LT	903	KA-9006	KN-303
		KA-9006	KN-303C
VN900 Vulcan Custom	903	KA-9006	KN-303
		KA-9006	KN-303C
VN1700 Vulcan Classic	1700	KA-1709	KN-303
		KA-1709	KN-303C
VN1700 Vulcan Nomad	1700	KA-1709	KN-303
		KA-1709	KN-303C
VN1700 Vulcan Vaquero	1700	KA-1709	KN-303
		KA-1709	KN-303C
VN1700 Vulcan Voyager	1700	KA-1709	KN-303
		KA-1709	KN-303C
Z750	750	KA-1003	KN-303
		KA-1003	KN-303C
Z750R	750	KA-1003	KN-303
		KA-1003	KN-303C
Z1000	1000		KN-303
			KN-303C
Z1000	1000 - After VIN ZRT00DE010766	KA-1111	KN-303
Z1000	1000 - Before VIN ZRT00DE010765	KA-1010	KN-303
Z1000 SX	1000	KA-1111	KN-303
		KA-1111	KN-303C
ZG1400 Concours	1400	KA-1406	KN-303
		KA-1406	KN-303C
ZX6R Ninja	599	KA-6009	KN-303

2011 KAWASAKI

Vehicle	Engine Type	Air Filter	Oil Filter
ZX6R Ninja	599	KA-6009	KN-303C
ZX6R Ninja	599 - Race Specific	KA-6009R	KN-303
ZX10R Ninja	1000	KA-1011	KN-303
		KA-1011	KN-303C
ZX10R Ninja	1000 - Race Specific	KA-1011R	KN-303
ZX14R Ninja	1400	KA-1406	KN-303
		KA-1406	KN-303C
ZX1000 Ninja	1043	KA-1111	KN-303
		KA-1111	KN-303C
ZZR1400	1400	KA-1406	KN-303
		KA-1406	KN-303C

2010 KAWASAKI

Vehicle	Engine Type	Air Filter	Oil Filter
1400GTR	1400	KA-1406	KN-303
		KA-1406	KN-303C
ER6n	650		KN-303
			KN-303C
EX250R Ninja	250	KA-2508	KN-401
EX650R Ninja	650		KN-303
			KN-303C
KAF400 Mule 600	400	KA-4093	KN-128
KAF400 Mule 610 4x4	400	KA-4093	KN-128
KAF620 Mule 4010 Trans4x4 Hardwoods Green HD	617	KA-6201	
KAF950 Mule 4010 Diesel 4x4	953	KA-6201	
KAF950 Mule 4010 Trans4x4 Diesel	950	KA-6201	
KFX450R	449	KA-4508	KN-112
KFX700	700	KA-6503	
KLE650 Versys	650		KN-303
			KN-303C
KLF250 Bayou	250	KA-2288	KN-123
KLR650	650	KA-6589	KN-123
KLX110	110	KA-1102	KN-112
KLX125 D-Tracker	125	KA-1408	KN-112
KLX140	140	KA-1408	KN-112
KLX250S	250		KN-112
KLX250SF	250		KN-112
KLX450R	450	KA-4408	KN-112
KRF750 Teryx FI 4x4	750	KA-7508	KN-204
		KA-7508	KN-204C
KRF750 Teryx FI 4x4 LE	750	KA-7508	KN-204
		KA-7508	KN-204C
KRF750 Teryx FI 4x4 Sport	750	KA-7508	KN-204
		KA-7508	KN-204C
KVF360 Prairie 4x4	360	KA-3603	KN-204
		KA-3603	KN-204C
KVF360 Prairie 4x4 Hardwoods Green HD	360	KA-3603	KN-204
		KA-3603	KN-204C
KVF650 Brute Force 4x4	650	KA-6503	KN-204
		KA-6503	KN-204C
KVF750 Brute Force 4x4i	749	KA-7408	KN-204
		KA-7408	KN-204C
KX85	85	KA-8088	
KX250F	250	KA-2506XD	KN-207

2010 KAWASAKI

Vehicle	Engine Type	Air Filter	Oil Filter
KX450F	450	KA-2506XD	KN-112
VN900 Vulcan Classic	903	KA-9006	KN-303
		KA-9006	KN-303C
VN900 Vulcan Classic LT	903	KA-9006	KN-303
		KA-9006	KN-303C
VN900 Vulcan Custom	903	KA-9006	KN-303
		KA-9006	KN-303C
VN1700 Vulcan Classic	1700	KA-1709	KN-303
		KA-1709	KN-303C
VN1700 Vulcan Classic LT	1700	KA-1709	KN-303
		KA-1709	KN-303C
VN1700 Vulcan Nomad	1700	KA-1709	KN-303
		KA-1709	KN-303C
VN1700 Vulcan Voyager	1700	KA-1709	KN-303
		KA-1709	KN-303C
VN2000 Vulcan Classic	2000	KA-2008	KN-303
		KA-2008	KN-303C
VN2000 Vulcan Classic LT	2000		KN-303
			KN-303C
Z750	750	KA-1003	KN-303
		KA-1003	KN-303C
Z1000	1000	KA-1010	KN-303
		KA-1010	KN-303C
ZG1400 Concours	1400	KA-1406	KN-303
		KA-1406	KN-303C
ZX6R Ninja	599	KA-6009	KN-303
		KA-6009	KN-303C
ZX6R Ninja	599 - Race Specific	KA-6009R	KN-303
ZX10R Ninja	1000	KA-1008	KN-303
		KA-1008	KN-303C
ZX10R Ninja	1000 - Race Specific	KA-1008R	KN-303
ZX14R Ninja	1400	KA-1406	KN-303
		KA-1406	KN-303C
ZZR1400	1400	KA-1406	KN-303
		KA-1406	KN-303C

2009 KAWASAKI

Vehicle	Engine Type	Air Filter	Oil Filter
1400GTR	1400	KA-1406	KN-303
		KA-1406	KN-303C
BN125 Eliminator	125		KN-112
EN500 Vulcan LTD	500	KA-5096	KN-303
		KA-5096	KN-303C
ER6f	650		KN-303
			KN-303C
ER6n	650		KN-303
			KN-303C
EX250R Ninja	250	KA-2508	KN-401
EX500R Ninja	500	KA-5087	KN-303
		KA-5087	KN-303C
EX650R Ninja	650		KN-303

*Indicates 2 filters required ♦ - Intake kit available - see page 80 Applications updated daily at knfilters.com

Vehicle	Engine Type	Air Filter	Oil Filter
2009 KAWASAKI			
EX650R Ninja	650		KN-303C
JT1500 STX-15F	1493		KN-204
			KN-204C
JT1500 STX-15F	1493 - Option		KN-303
			KN-303C
JT1500 Ultra 260 X	1500		KN-204
			KN-204C
KAF400 Mule 600	400	KA-4093	KN-128
KAF400 Mule 610 4x4	400	KA-4093	KN-128
KAF400 Mule 610 4x4 Hardwoods Green HD	400	KA-4093	KN-128
KAF620 Mule 4010 4x4 Hardwoods Green HD	617	KA-6201	KN-128
KAF950 Mule 4010 Trans4x4 Diesel	950	KA-6201	
KFX450R	449	KA-4508	KN-112
KFX700	700	KA-6503	KN-204
		KA-6503	KN-204C
KL250 Super Sherpa	250		KN-112
KLE650 Versys	650		KN-303
			KN-303C
KLF250 Bayou	228	KA-2288	KN-123
KLR650	650	KA-6589	KN-123
KLX110	110	KA-1102	KN-112
KLX140	140	KA-1408	KN-112
KLX140L	140	KA-1408	KN-112
KLX250 D-Tracker X	250		KN-112
KLX250S	250		KN-112
KLX250SF	250		KN-112
KLX450R	450	KA-4408	KN-112
KRF750 Teryx FI 4x4	750	KA-7508	KN-204
		KA-7508	KN-204C
KRF750 Teryx FI 4x4 LE	750	KA-7508	KN-204
		KA-7508	KN-204C
KRF750 Teryx FI 4x4 LE Camo	750	KA-7508	KN-204
		KA-7508	KN-204C
KRF750 Teryx FI 4x4 NRA Outdoors	750	KA-7508	KN-204
		KA-7508	KN-204C
KRF750 Teryx FI 4x4 Sport	750	KA-7508	KN-204
		KA-7508	KN-204C
KVF360 Prairie 4x4	360	KA-3603	KN-204
		KA-3603	KN-204C
KVF360 Prairie 4x4 Hardwoods Green HD	360	KA-3603	KN-204
		KA-3603	KN-204C
KVF650 Brute Force 4x4	650	KA-6503	KN-204
		KA-6503	KN-204C
KVF650 Brute Force 4x4i	650	KA-7504	KN-204
		KA-7504	KN-204C
KVF750 Brute Force 4x4i	749	KA-7408	KN-204
		KA-7408	KN-204C

Vehicle	Engine Type	Air Filter	Oil Filter
2009 KAWASAKI			
KX100	100	KA-8088	
KX250F	250	KA-2506XD	KN-207
KX450F	450	KA-2506XD	KN-112
VN900 Vulcan Classic	903	KA-9006	KN-303
		KA-9006	KN-303C
VN900 Vulcan Classic LT	903	KA-9006	KN-303
		KA-9006	KN-303C
VN900 Vulcan Custom	903	KA-9006	KN-303
		KA-9006	KN-303C
VN1700 Vulcan Classic	1700	KA-1709	KN-303
		KA-1709	KN-303C
VN1700 Vulcan Classic LT	1700	KA-1709	KN-303
		KA-1709	KN-303C
VN1700 Vulcan Nomad	1700	KA-1709	KN-303
		KA-1709	KN-303C
VN1700 Vulcan Voyager	1700	KA-1709	KN-303
		KA-1709	KN-303C
VN2000 Vulcan	2000	KA-2008	KN-303
		KA-2008	KN-303C
VN2000 Vulcan Classic	2000	KA-2008	KN-303
		KA-2008	KN-303C
VN2000 Vulcan Classic LT	2000	KA-2008	KN-303
		KA-2008	KN-303C
Z750	750	KA-1003	KN-303
		KA-1003	KN-303C
Z1000	1000	KA-1003	KN-303
		KA-1003	KN-303C
ZG1400 Concours	1400	KA-1406	KN-303
		KA-1406	KN-303C
ZX6R Ninja	600	KA-6009	KN-303
		KA-6009	KN-303C
ZX6R Ninja	600 - Race Specific	KA-6009R	KN-303
ZX10R Ninja	1000	KA-1008	KN-303
		KA-1008	KN-303C
ZX10R Ninja	1000 - Race Specific	KA-1008R	KN-303
ZX14R Ninja	1400	KA-1406	KN-303
		KA-1406	KN-303C
ZZR1400	1400	KA-1406	KN-303
		KA-1406	KN-303C
2008 KAWASAKI			
1400GTR	1400	KA-1406	KN-303
		KA-1406	KN-303C
EN500 Vulcan LTD	500	KA-5096	KN-303
		KA-5096	KN-303C
ER6f	650		KN-303
			KN-303C
ER6n	650		KN-303
			KN-303C
EX250R Ninja	250	KA-2508	KN-401

*Indicates 2 filters required ♦ - Intake kit available - see page 80 Applications updated daily at knfilters.com

2008 KAWASAKI

Vehicle	Engine Type	Air Filter	Oil Filter
EX500R Ninja	500	KA-5087	KN-303
		KA-5087	KN-303C
EX650R Ninja	650		KN-303
			KN-303C
JT1500 STX-15F	1493		KN-204
			KN-204C
JT1500 STX-15F	1493 - Option		KN-303
			KN-303C
JT1500 Ultra 250X	1500		KN-204
			KN-204C
JT1500 Ultra LX	1500		KN-204
			KN-204C
JT1500 Ultra LX	1500 - Option		KN-303
			KN-303C
KAF400 Mule 600	400	KA-4093	KN-128
KAF400 Mule 610 4x4	400	KA-4093	KN-128
KAF400 Mule 610 4x4 Hardwoods Green HD	400	KA-4093	KN-128
KAF620 Mule 3010 4x4	620	KA-6201	KN-128
KAF620 Mule 3010 4x4 Hardwoods Green HD	620	KA-6201	KN-128
KAF620 Mule 3010 Trans4x4	620	KA-6201	KN-128
KAF620 Mule 3010 Trans4x4 Hardwoods Green HD	620	KA-6201	KN-128
KAF950 Mule 3010 Diesel 4x4	950	KA-6201	
KAF950 Mule 3010 Trans4x4 Diesel	950	KA-6201	
KFX450R	449	KA-4508	KN-112
KFX700	700	KA-6503	KN-204
		KA-6503	KN-204C
KLE650 Versys	650		KN-303
			KN-303C
KLF250 Bayou	228	KA-2288	KN-123
KLR650	650	KA-6589	KN-123
KLX110	110	KA-1102	KN-112
KLX140	140	KA-1408	KN-112
KLX140L	140	KA-1408	KN-112
KLX250 D-Tracker X	250		KN-112
KLX450R	450	KA-4408	KN-112
KRF750 Teryx 4x4	750	KA-7508	KN-204
		KA-7508	KN-204C
KRF750 Teryx 4x4 LE	750	KA-7508	KN-204
		KA-7508	KN-204C
KRF750 Teryx 4x4 NRA Outdoors	750	KA-7508	KN-204
		KA-7508	KN-204C
KVF360 Prairie 2x4	360	KA-3603	KN-204
		KA-3603	KN-204C
KVF360 Prairie 4x4	360	KA-3603	KN-204
		KA-3603	KN-204C
KVF360 Prairie 4x4 Hardwoods Green HD	360	KA-3603	KN-204
		KA-3603	KN-204C
KVF650 Brute Force 4x4	650	KA-6503	KN-204
		KA-6503	KN-204C
KVF650 Brute Force 4x4i	650	KA-7504	KN-204

2008 KAWASAKI

Vehicle	Engine Type	Air Filter	Oil Filter
KVF650 Brute Force 4x4i	650	KA-7504	KN-204C
KVF750 Brute Force 4x4i	749	KA-7408	KN-204
		KA-7408	KN-204C
KX65	65	KA-8088	
KX85	85	KA-8088	
KX250	250		KN-207
KX250	250 - Non-US	KA-1297	KN-207
KX250F	250	KA-2506XD	KN-207
KX450F	450	KA-2506XD	KN-112
VN900 Vulcan Classic	903	KA-9006	KN-303
		KA-9006	KN-303C
VN900 Vulcan Classic LT	903	KA-9006	KN-303
		KA-9006	KN-303C
VN900 Vulcan Custom	903	KA-9006	KN-303
		KA-9006	KN-303C
VN1500 Vulcan Classic	1500	KA-1596	KN-303
		KA-1596	KN-303C
VN1600 Vulcan Classic	1600	KA-1603	KN-303
		KA-1603	KN-303C
VN1600 Vulcan Mean Streak	1600	KA-1596	KN-303
		KA-1596	KN-303C
VN1600 Vulcan Nomad	1600	KA-1603	KN-303
		KA-1603	KN-303C
VN2000 Vulcan	2000	KA-2008	KN-303
		KA-2008	KN-303C
VN2000 Vulcan Classic	2000	KA-2008	KN-303
		KA-2008	KN-303C
VN2000 Vulcan Classic LT	2000	KA-2008	KN-303
		KA-2008	KN-303C
Z750	750	KA-1003	KN-303
		KA-1003	KN-303C
Z750S	750		KN-303
			KN-303C
Z1000	1000	KA-1003	KN-303
		KA-1003	KN-303C
ZG1400 Concours	1400	KA-1406	KN-303
		KA-1406	KN-303C
ZRX1200R	1200	KA-1199	KN-401
ZX6R Ninja	600	KA-6007	KN-303
		KA-6007	KN-303C
ZX6R Ninja	600 - Race Specific	KA-6007R	KN-303
ZX10R Ninja	1000	KA-1008	KN-303
		KA-1008	KN-303C
ZX10R Ninja	1000 - Race Specific	KA-1008R	KN-303
ZX14R Ninja	1400	KA-1406	KN-303
		KA-1406	KN-303C
ZZR600	600 - US	KA-6098	KN-303
		KA-6098	KN-303C

*Indicates 2 filters required ♦ - Intake kit available - see page 80 Applications updated daily at knfilters.com

Vehicle	Engine Type	Air Filter	Oil Filter
2008 KAWASAKI			
ZZR1400	1400	KA-1406	KN-303
		KA-1406	KN-303C
2007 KAWASAKI			
BJ250 Estrella	250		KN-123
BJ250 TR	250		KN-123
BN125 Eliminator	125		KN-112
EN500 Vulcan LTD	500	KA-5096	KN-303
		KA-5096	KN-303C
ER6f	650		KN-303
			KN-303C
ER6n	650		KN-303
			KN-303C
EX250R Ninja	250	KA-2586	KN-401
EX500R Ninja	500	KA-5087	KN-303
		KA-5087	KN-303C
EX650R Ninja	650		KN-303
			KN-303C
JT1200 STX-12F	1176 - Option		KN-303
			KN-303C
JT1500 Ultra 250X	1500		KN-204
			KN-204C
JT1500 Ultra LX	1500		KN-204
			KN-204C
JT1500 Ultra LX	1500 - Option		KN-303
			KN-303C
KAF400 Mule 600	400	KA-4093	KN-128
KAF400 Mule 610 4x4	400	KA-4093	KN-128
KAF400 Mule 610 4x4 Hardwoods Green HD	400	KA-4093	KN-128
KAF620 Mule 3000	620	KA-6201	KN-128
KAF620 Mule 3010 4x4	620	KA-6201	KN-128
KAF620 Mule 3010 4x4 Hardwoods Green HD	620	KA-6201	KN-128
KAF620 Mule 3010 Trans4x4	620	KA-6201	KN-128
KAF620 Mule 3010 Trans4x4 Hardwoods Green HD	620	KA-6201	KN-128
KAF950 Mule 3010 Diesel 4x4	950	KA-6201	
KAF950 Mule 3010 Trans4x4 Diesel	950	KA-6201	
KFX700	700	KA-6503	KN-204
		KA-6503	KN-204C
KL250 Super Sherpa	250		KN-112
KLE650 Versys	650		KN-303
			KN-303C
KLF250 Bayou	228	KA-2288	KN-123
KLR650	650	KA-6589	KN-123
KLX110	110	KA-1102	KN-112
KLX250 D-Tracker	250	KA-1287	KN-112
KLX250S	250	KA-1287	KN-112
KLX300R	300	KA-1287	KN-112
KVF360 Prairie 4x4	360	KA-3603	KN-204
		KA-3603	KN-204C
KVF360 Prairie 4x4 Hardwoods Green HD	360	KA-3603	KN-204
		KA-3603	KN-204C
KVF650 Brute Force 4x4	650	KA-6503	KN-204

Vehicle	Engine Type	Air Filter	Oil Filter
2007 KAWASAKI			
KVF650 Brute Force 4x4	650	KA-6503	KN-204C
KVF650 Brute Force 4x4i	650	KA-7504	KN-204
		KA-7504	KN-204C
KVF750 Brute Force 4x4i	750	KA-7504	KN-204
		KA-7504	KN-204C
KX65	65	KA-8088	
KX85	85	KA-8088	
KX100	100	KA-8088	
KX125	125 - Non-US	KA-1297	
KX250	250	KA-1297	KN-207
KX250F	250	KA-2506XD	KN-207
KX450F	450	KA-2506XD	KN-112
VN900 Vulcan Classic	903	KA-9006	KN-303
		KA-9006	KN-303C
VN900 Vulcan Classic LT	903	KA-9006	KN-303
		KA-9006	KN-303C
VN900 Vulcan Custom	903	KA-9006	KN-303
		KA-9006	KN-303C
VN1500 Vulcan Classic	1500	KA-1596	KN-303
		KA-1596	KN-303C
VN1600 Vulcan Classic	1600	KA-1603	KN-303
		KA-1603	KN-303C
VN1600 Vulcan Mean Streak	1600	KA-1596	KN-303
		KA-1596	KN-303C
VN1600 Vulcan Nomad	1600	KA-1603	KN-303
		KA-1603	KN-303C
VN2000 Vulcan	2000	KA-2008	KN-303
		KA-2008	KN-303C
VN2000 Vulcan Classic	2000	KA-2008	KN-303
		KA-2008	KN-303C
VN2000 Vulcan Classic LT	2000	KA-2008	KN-303
		KA-2008	KN-303C
Z750	750	KA-1003	KN-303
		KA-1003	KN-303C
Z750S	750	KA-1003	KN-303
		KA-1003	KN-303C
Z1000	1000	KA-1003	KN-303
		KA-1003	KN-303C
ZX6R Ninja	600	KA-6007	KN-303
		KA-6007	KN-303C
ZX6R Ninja	600 - Race Specific	KA-6007R	KN-303
ZX10R Ninja	1000	KA-1004	KN-303
		KA-1004	KN-303C
ZX14R Ninja	1400	KA-1406	KN-303
		KA-1406	KN-303C
ZZR600	600 - US	KA-6098	KN-303

*Indicates 2 filters required ♦ - Intake kit available - see page 80 Applications updated daily at knfilters.com

Vehicle	Engine Type	Air Filter	Oil Filter
2007 KAWASAKI			
ZZR600	600 - US	KA-6098	KN-303C
ZZR1400	1400	KA-1406	KN-303
		KA-1406	KN-303C
2006 KAWASAKI			
BJ250 Estrella Custom	250		KN-123
BJ250 Estrella RS	250		KN-123
BJ250 Estrella RS Ltd. Edition	250		KN-123
BN125 Eliminator	125		KN-112
EN500 Vulcan LTD	500	KA-5096	KN-204
		KA-5096	KN-204C
ER6f	650		KN-204
			KN-204C
ER6n	650		KN-204
			KN-204C
EX250R Ninja	250	KA-2586	KN-401
EX500R Ninja	500	KA-5087	KN-204
		KA-5087	KN-204C
EX650R Ninja	650		KN-204
			KN-204C
JT1200 STX-12F	1176		KN-204
			KN-204C
JT1500 STX-15F	1493		KN-204
			KN-204C
KAF400 Mule 600	400	KA-4093	KN-128
KAF400 Mule 610 4x4	400	KA-4093	KN-128
KAF400 Mule 610 4x4 Hardwoods Green HD	400	KA-4093	KN-128
KAF620 Mule 3000	620	KA-6201	KN-128
KAF620 Mule 3010 4x4	620	KA-6201	KN-128
KAF620 Mule 3010 4x4 Hardwoods Green HD	620	KA-6201	KN-128
KAF620 Mule 3010 Trans4x4	620	KA-6201	KN-128
KAF620 Mule 3010 Trans4x4 Hardwoods Green HD	620	KA-6201	KN-128
KDX200	200	KA-1287	
KFX80	80	SU-8087	
KFX400	400	SU-4002	KN-139
KFX700	697	KA-6503	KN-204
		KA-6503	KN-204C
KLF250 Bayou	228	KA-2288	KN-123
KLR650	650	KA-6589	KN-123
KLX110	110	KA-1102	KN-112
KLX125	125	KA-1203	KN-132
KLX125L	125	KA-1203	KN-132
KLX250 D-Tracker	250	KA-1287	KN-112
KLX250S	250	KA-1287	KN-112
KLX300R	300	KA-1287	KN-112
KVF360 Prairie 4x4	360	KA-3603	KN-204
		KA-3603	KN-204C
KVF360 Prairie 4x4 Hardwoods Green HD	360	KA-3603	KN-204
		KA-3603	KN-204C
KVF650 Brute Force 4x4	650	KA-6503	KN-204
		KA-6503	KN-204C
KVF650 Brute Force 4x4i	650	KA-7504	KN-204

Vehicle	Engine Type	Air Filter	Oil Filter
2006 KAWASAKI			
KVF650 Brute Force 4x4i	650	KA-7504	KN-204C
KVF700 Prairie 4x4	700	KA-6503	KN-204
		KA-6503	KN-204C
KVF700 Prairie 4x4 Team Green	700	KA-6503	KN-204
		KA-6503	KN-204C
KVF750 Brute Force 4x4i	750	KA-7504	KN-204
		KA-7504	KN-204C
KX65	65	KA-8088	
KX85	85	KA-8088	
KX100	100	KA-8088	
KX125	125 - Non-US	KA-1297	
KX250	250	KA-1297	KN-207
KX250F	250	KA-2506XD	KN-207
KX450F	450	KA-2506XD	KN-112
VN750 Vulcan	732	KA-7586	KN-204
		KA-7586	KN-204C
VN800 Vulcan Drifter	800	KA-8095	KN-204
		KA-8095	KN-204C
VN900 Vulcan Classic	903	KA-9006	KN-303
		KA-9006	KN-303C
VN900 Vulcan Classic LT	903	KA-9006	KN-303
		KA-9006	KN-303C
VN1500 Vulcan Classic	1500	KA-1596	KN-204
		KA-1596	KN-204C
VN1600 Vulcan Classic	1600	KA-1603	KN-204
		KA-1603	KN-204C
VN1600 Vulcan Mean Streak	1600	KA-1596	KN-204
		KA-1596	KN-204C
VN1600 Vulcan Nomad	1600	KA-1603	KN-204
		KA-1603	KN-204C
VN2000 Vulcan	2000	KA-2008	KN-204
		KA-2008	KN-204C
VN2000 Vulcan Classic	2000	KA-2008	KN-204
		KA-2008	KN-204C
VN2000 Vulcan Classic LT	2000	KA-2008	KN-204
		KA-2008	KN-204C
VN2000 Vulcan Limited	2000	KA-2008	KN-204
		KA-2008	KN-204C
Z750	750	KA-1003	KN-204
		KA-1003	KN-204C
Z750S	750	KA-1003	KN-204
		KA-1003	KN-204C
Z1000	1000	KA-1003	KN-204
		KA-1003	KN-204C
ZG1000 Concours	998	KA-9084	KN-401
ZR750 Zephyr	750	KA-0850	KN-401

*Indicates 2 filters required ♦ - Intake kit available - see page 80 Applications updated daily at knfilters.com

2006 KAWASAKI

Vehicle	Engine Type	Air Filter	Oil Filter
ZRX400	400		KN-303
			KN-303C
ZX6R Ninja	636	KA-6005	KN-204
		KA-6005	KN-204C
ZX6RR Ninja	600	KA-6005	KN-204
		KA-6005	KN-204C
ZX10R Ninja	1000	KA-1004	KN-204
		KA-1004	KN-204C
ZX12R Ninja	1200	KA-1299-1	KN-204
		KA-1299-1	KN-204C
ZX14R Ninja	1400	KA-1406	KN-303
		KA-1406	KN-303C
ZZR600	600		KN-204
			KN-204C
ZZR600	600 - Non-US	KA-6093	KN-204
ZZR600	600 - US	KA-6098	KN-204
ZZR1400	1400	KA-1406	KN-303
		KA-1406	KN-303C

2005 KAWASAKI

Vehicle	Engine Type	Air Filter	Oil Filter
BN125 Eliminator	125		KN-112
EN500 Vulcan LTD	500	KA-5096	KN-204
		KA-5096	KN-204C
ER5	500	KA-0018	KN-303
		KA-0018	KN-303C
EX250R Ninja	250	KA-2586	KN-401
EX500R Ninja	500	KA-5087	KN-204
		KA-5087	KN-204C
JT1200 STX-12F	1176		KN-204
			KN-204C
JT1500 STX-15F	1493		KN-204
			KN-204C
KAF400 Mule 600	400	KA-4093	KN-128
KAF400 Mule 610 4x4	400	KA-4093	KN-128
KAF400 Mule 610 4x4 Hardwoods Green HD	400	KA-4093	KN-128
KAF620 Mule 3000	620	KA-6201	KN-128
KAF620 Mule 3010 4x4	620	KA-6201	KN-128
KAF620 Mule 3010 4x4 Hardwoods Green HD	620	KA-6201	KN-128
KAF620 Mule 3010 Trans4x4	620	KA-6201	KN-128
KAF620 Mule 3010 Trans4x4 Hardwoods Green HD	620	KA-6201	KN-128
KAF950 Mule 3010 Diesel 4x4	950	KA-6201	
KDX220R	220	KA-1287	
KFX80	80	SU-8087	
KFX400	400	SU-4002	KN-139
KFX700	697	KA-6503	KN-204
		KA-6503	KN-204C
KLF250 Bayou	228	KA-2288	KN-123
KLR250	250		KN-123
KLR650	650	KA-6589	KN-123
KLX110	110	KA-1102	KN-112
KLX125	125	KA-1203	KN-132
KLX125L	125	KA-1203	KN-132
KLX250 D-Tracker	250	KA-1287	KN-112
KLX300R	300	KA-1287	KN-112
KVF360 Prairie 2x4	360	KA-3603	KN-204
		KA-3603	KN-204C

2005 KAWASAKI

Vehicle	Engine Type	Air Filter	Oil Filter
KVF360 Prairie 4x4	360	KA-3603	KN-204
		KA-3603	KN-204C
KVF360 Prairie 4x4 Hardwoods Green HD	360	KA-3603	KN-204
		KA-3603	KN-204C
KVF650 Brute Force 4x4	650	KA-6503	KN-204
		KA-6503	KN-204C
KVF700 Prairie 4x4	700	KA-6503	KN-204
		KA-6503	KN-204C
KVF700 Prairie 4x4 Hardwoods Green HD	700	KA-6503	KN-204
		KA-6503	KN-204C
KVF700 Prairie 4x4 Team Green	700	KA-6503	KN-204
		KA-6503	KN-204C
KVF750 Brute Force 4x4i	750	KA-7504	KN-204
		KA-7504	KN-204C
KX65	65	KA-8088	
KX125	125	KA-1297	
KX250	250	KA-1297	
KX250F	250	KA-2504	KN-207
VN750 Vulcan	732	KA-7586	KN-204
		KA-7586	KN-204C
VN800 Vulcan	800	KA-8095	KN-204
		KA-8095	KN-204C
VN800 Vulcan Classic	800	KA-8095	KN-204
		KA-8095	KN-204C
VN800 Vulcan Drifter	800	KA-8095	KN-204
		KA-8095	KN-204C
VN1500 Vulcan Classic	1500	KA-1596	KN-204
		KA-1596	KN-204C
VN1500 Vulcan Drifter	1500	KA-1596	KN-204
		KA-1596	KN-204C
VN1600 Vulcan Classic	1600	KA-1603	KN-204
		KA-1603	KN-204C
VN1600 Vulcan Mean Streak	1600	KA-1596	KN-204
		KA-1596	KN-204C
VN1600 Vulcan Nomad	1600	KA-1603	KN-204
		KA-1603	KN-204C
VN2000 Vulcan	2000	KA-2008	KN-204
		KA-2008	KN-204C
VN2000 Vulcan Classic LT	2000		KN-204
			KN-204C
Z750	750	KA-1003	KN-204
		KA-1003	KN-204C
Z750S	750	KA-1003	KN-204
		KA-1003	KN-204C
Z1000	1000	KA-1003	KN-204

Vehicle	Engine Type	Air Filter	Oil Filter
2005 KAWASAKI			
Z1000	1000	KA-1003	KN-204C
ZG1000 Concours	998	KA-9084	KN-401
ZR7S	750	KA-0850	KN-401
ZRX1200	1200	KA-1199	KN-401
ZX6R Ninja	636	KA-6005	KN-204
		KA-6005	KN-204C
ZX6RR Ninja	600	KA-6005	KN-204
		KA-6005	KN-204C
ZX10R Ninja	1000	KA-1004	KN-204
		KA-1004	KN-204C
ZX12R Ninja	1200	KA-1299-1	KN-204
		KA-1299-1	KN-204C
ZZR600	600		KN-204
			KN-204C
ZZR600	600 - Non-US	KA-6093	KN-204
ZZR600	600 - US	KA-6098	KN-204
ZZR1200	1200	KA-1093	KN-401
2004 KAWASAKI			
BJ250 Estrella RS	250		KN-123
BJ250 Estrella RS Ltd. Edition	250		KN-123
BN125 Eliminator	125		KN-112
EN500 Vulcan LTD	500	KA-5096	KN-204
		KA-5096	KN-204C
EX250R Ninja	250	KA-2586	KN-401
EX500R Ninja	500	KA-5087	KN-204
		KA-5087	KN-204C
JT1200 STX-12F	1176		KN-204
			KN-204C
JT1500 STX-15F	1493		KN-204
			KN-204C
KAF300 Mule 550	300	KA-4093	KN-128
KAF620 Mule 3000	620	KA-6201	KN-128
KAF620 Mule 3010 4x4	620	KA-6201	KN-128
KAF620 Mule 3010 4x4 Hardwoods Green HD	620	KA-6201	KN-128
KAF950 Mule 3010 Diesel 4x4	950	KA-6201	
KDX200	200	KA-1287	
KDX220R	220	KA-1287	
KFX400	400	SU-4002	KN-139
KFX700 V Force	697	KA-6503	KN-204
		KA-6503	KN-204C
KLF250 Bayou	228	KA-2288	KN-123
KLF300 Bayou 4x4	300	KA-4093	KN-123
KLR250	250		KN-123
KLR650	650	KA-6589	KN-123
KLX110	110	KA-1102	KN-112
KLX125	125	KA-1203	KN-132
KLX125L	125	KA-1203	KN-132
KLX300R	300	KA-1287	KN-112
KSF250 Mojave	250	KA-2587	KN-123
KVF360 Prairie 2x4	360	KA-3603	KN-204
		KA-3603	KN-204C
KVF360 Prairie 4x4	360	KA-3603	KN-204
		KA-3603	KN-204C
KVF360 Prairie 4x4 Hardwoods Green HD	360	KA-3603	KN-204
		KA-3603	KN-204C
KVF700 Prairie 4x4	700	KA-6503	KN-204
		KA-6503	KN-204C
2004 KAWASAKI			
KVF700 Prairie 4x4 Hardwoods Green HD	700	KA-6503	KN-204
		KA-6503	KN-204C
KX65	65	KA-8088	
KX100	100	KA-8088	
KX125	125	KA-1297	
KX250	250	KA-1297	
KX250F	250	KA-2504	KN-207
KX500	500	KA-1287	
VN750 Vulcan	732	KA-7586	KN-204
		KA-7586	KN-204C
VN800 Vulcan	800	KA-8095	KN-204
		KA-8095	KN-204C
VN800 Vulcan Classic	800	KA-8095	KN-204
		KA-8095	KN-204C
VN800 Vulcan Drifter	800	KA-8095	KN-204
		KA-8095	KN-204C
VN1500 Vulcan Classic	1500	KA-1596	KN-204
		KA-1596	KN-204C
VN1500 Vulcan Drifter	1500	KA-1596	KN-204
		KA-1596	KN-204C
VN1500 Vulcan Nomad F/I	1500	KA-1596	KN-204
		KA-1596	KN-204C
VN1600 Vulcan Classic	1600	KA-1603	KN-204
		KA-1603	KN-204C
VN1600 Vulcan Mean Streak	1600	KA-1596	KN-204
		KA-1596	KN-204C
VN2000 Vulcan	2000	KA-2008	KN-204
		KA-2008	KN-204C
VN2000 Vulcan Classic LT	2000		KN-204
			KN-204C
Z750	750	KA-1003	KN-204
		KA-1003	KN-204C
Z1000	1000	KA-1003	KN-204
		KA-1003	KN-204C
ZG1000 Concours	998	KA-9084	KN-401
ZRX1200	1200	KA-1199	KN-401
ZX6R Ninja	636	KA-6003	KN-204
		KA-6003	KN-204C
ZX6RR Ninja	600	KA-6003	KN-204
		KA-6003	KN-204C
ZX10R Ninja	1000	KA-1004	KN-204
		KA-1004	KN-204C
ZX12R Ninja	1200	KA-1299-1	KN-204
		KA-1299-1	KN-204C
ZZR600	600		KN-204
			KN-204C
ZZR600	600 - exc. OE filter w/hole	KA-6093	KN-204
ZZR1200	1200	KA-1093	KN-401
2003 KAWASAKI			
EN500 Vulcan LTD	500	KA-5096	KN-204

*Indicates 2 filters required ♦ - Intake kit available - see page 80 Applications updated daily at knfilters.com

Vehicle	Engine Type	Air Filter	Oil Filter
2003 KAWASAKI			
EN500 Vulcan LTD	500	KA-5096	KN-204C
EX250R Ninja	250	KA-2586	KN-401
EX500R Ninja	500	KA-5087	KN-204
		KA-5087	KN-204C
KAF300 Mule 550	300	KA-4093	KN-128
KAF620 Mule 3010 4x4	620	KA-6201	KN-128
KDX220R	220	KA-1287	
KFX80	80	SU-8087	
KFX400	400	SU-4002	KN-139
KL250 Super Sherpa	250		KN-112
KLF250 Bayou	249	KA-2288	KN-123
KLR650	650	KA-6589	KN-123
KLX110	110	KA-1102	KN-112
KLX125	125	KA-1203	KN-132
KLX125L	125	KA-1203	KN-132
KLX300R	300	KA-1287	KN-112
KLX400R	400	SU-4000	KN-139
KLX400SR	400	SU-4000	KN-139
KSF250 Mojave	249	KA-2587	KN-123
KVF360 Prairie 2x4	392	KA-3603	KN-204
		KA-3603	KN-204C
KVF360 Prairie 4x4	360	KA-3603	KN-204
		KA-3603	KN-204C
KVF650 Prairie 4x4	635	KA-6503	KN-204
		KA-6503	KN-204C
KX65	65	KA-8088	
KX100	100	KA-8088	
KX125	125	KA-1297	
KX250	250	KA-1297	
VN750 Vulcan	732	KA-7586	KN-303
		KA-7586	KN-303C
VN800 Vulcan	800	KA-8095	KN-204
		KA-8095	KN-204C
VN800 Vulcan Classic	803	KA-8095	KN-204
		KA-8095	KN-204C
VN800 Vulcan Drifter	800	KA-8095	KN-204
		KA-8095	KN-204C
VN1500 Vulcan Classic	1500	KA-1596	KN-204
		KA-1596	KN-204C
VN1500 Vulcan Classic Tourer F/I	1500	KA-1596	KN-204
		KA-1596	KN-204C
VN1500 Vulcan Drifter	1500	KA-1596	KN-204
		KA-1596	KN-204C
VN1500 Vulcan Mean Streak	1500	KA-1596	KN-204
		KA-1596	KN-204C
VN1500 Vulcan Nomad F/I	1500	KA-1596	KN-204
		KA-1596	KN-204C
VN1600 Vulcan Classic	1553	KA-1603	KN-204
		KA-1603	KN-204C
W650	650		KN-204
			KN-204C
Z1000	1000	KA-1003	KN-204

Vehicle	Engine Type	Air Filter	Oil Filter
2003 KAWASAKI			
Z1000	1000	KA-1003	KN-204C
ZG1000 Concours	998	KA-9084	KN-401
ZG1200 Voyager XII	1185		KN-401
ZR7S	750	KA-0850	KN-401
ZR750 Zephyr	750	KA-0850	KN-401
ZRX1200	1200	KA-1199	KN-401
ZX6R Ninja	636	KA-6003	KN-204
		KA-6003	KN-204C
ZX6RR Ninja	600	KA-6003	KN-204
		KA-6003	KN-204C
ZX7R Ninja	750	KA-7596	KN-303
		KA-7596	KN-303C
ZX9R Ninja	900	KA-9098	KN-204
		KA-9098	KN-204C
ZX12R Ninja	1200	KA-1299-1	KN-204
		KA-1299-1	KN-204C
ZZR600	600		KN-204
			KN-204C
ZZR600	600 - exc. OE filter w/hole	KA-6093	KN-204
ZZR1200	1200	KA-1093	KN-401
2002 KAWASAKI			
EN500 Vulcan LTD	500	KA-5096	KN-303
		KA-5096	KN-303C
EX250R Ninja	250	KA-2586	KN-401
EX500R Ninja	500	KA-5087	KN-303
		KA-5087	KN-303C
KAF620 Mule 3000	620	KA-6201	KN-128
KAF620 Mule 3010 4x4	620	KA-6201	KN-128
KDX200	200	KA-1287	
KDX220R	220	KA-1287	
KEF300 Lakota Sport	290	KA-2587	KN-123
KL250 Super Sherpa	250		KN-112
KLF220 Bayou	220	KA-2288	KN-123
KLR250	250		KN-123
KLR650	650	KA-6589	KN-123
KLX110	110	KA-1102	KN-112
KLX300R	300	KA-1287	KN-112
KSF250 Mojave	249	KA-2587	KN-123
KVF300 Prairie 2x4	290	KA-4093	KN-303
		KA-4093	KN-303C
KVF300 Prairie 4x4	300	KA-4093	KN-303
		KA-4093	KN-303C
KVF400 Prairie 4x4	400	KA-4093	KN-303
		KA-4093	KN-303C
KVF650 Prairie 4x4	635	KA-6502	KN-204
		KA-6502	KN-204C
KX85	85	KA-8088	
KX100	100	KA-8088	
KX125	125	KA-1297	
KX250	250	KA-1297	
KX500	500	KA-1287	
VN750 Vulcan	732	KA-7586	KN-303
		KA-7586	KN-303C
VN800 Vulcan	800	KA-8095	KN-303
		KA-8095	KN-303C
VN800 Vulcan Classic	803	KA-8095	KN-204
		KA-8095	KN-204C
VN800 Vulcan Drifter	800	KA-8095	KN-303
		KA-8095	KN-303C
VN1500 Vulcan Classic	1500	KA-1596	KN-204

*Indicates 2 filters required ♦ - Intake kit available - see page 80 Applications updated daily at knfilters.com

Vehicle	Engine Type	Air Filter	Oil Filter
2002 KAWASAKI			
VN1500 Vulcan Classic	1500	KA-1596	KN-204C
VN1500 Vulcan Classic F/I	1500	KA-1596	KN-204
		KA-1596	KN-204C
VN1500 Vulcan Classic Tourer F/I	1500	KA-1596	KN-204
		KA-1596	KN-204C
VN1500 Vulcan Drifter	1500	KA-1596	KN-204
		KA-1596	KN-204C
VN1500 Vulcan Mean Streak	1500	KA-1596	KN-204
		KA-1596	KN-204C
VN1500 Vulcan Nomad F/I	1500	KA-1596	KN-204
		KA-1596	KN-204C
ZG1000 Concours	998	KA-9084	KN-401
ZG1200 Voyager XII	1185		KN-401
ZR7S	750	KA-0850	KN-401
ZR750 Zephyr	750	KA-0850	KN-401
ZRX1200	1200	KA-1199	KN-401
ZX6R Ninja	588	KA-6098	KN-204
		KA-6098	KN-204C
ZX7R Ninja	750	KA-7596	KN-303
		KA-7596	KN-303C
ZX9R Ninja	900	KA-9098	KN-204
		KA-9098	KN-204C
ZX12R Ninja	1200	KA-1299-1	KN-204
		KA-1299-1	KN-204C
ZZR600	600		KN-204
			KN-204C
ZZR600	600 - exc. OE filter w/hole	KA-6093	KN-204
ZZR1200	1200	KA-1093	KN-401
2001 KAWASAKI			
BN125 Eliminator	125		KN-112
EN500 Vulcan LTD	500	KA-5096	KN-303
		KA-5096	KN-303C
EX250R Ninja	250	KA-2586	KN-401
EX500R Ninja	500	KA-5087	KN-303
		KA-5087	KN-303C
KAF300 Mule 550	300	KA-4093	KN-128
KAF620 Mule 3010 4x4	620	KA-6201	KN-128
KAF950 Mule 2510 Diesel	950	KA-6201	
KDX200	200	KA-1287	
KEF300 Lakota Sport	290	KA-2587	KN-123
KL250 Super Sherpa	250		KN-112
KLF220 Bayou	215	KA-2288	KN-123
KLF300 Bayou 4x4	300	KA-4093	KN-123
KLR250	250		KN-123
KLR650	650	KA-6589	KN-123
KLX250 D-Tracker	250	KA-1287	KN-112
KLX300R	300	KA-1287	KN-112
KSF250 Mojave	249	KA-2587	KN-123
KVF300 Prairie 2x4	290	KA-4093	KN-303
		KA-4093	KN-303C
KVF300 Prairie 4x4	300	KA-4093	KN-303
		KA-4093	KN-303C
KVF400 Prairie 4x4	400	KA-4093	KN-303

Vehicle	Engine Type	Air Filter	Oil Filter
2001 KAWASAKI			
KVF400 Prairie 4x4	400	KA-4093	KN-303C
KX100	100	KA-8088	
KX125	125	KA-1297	
KX250	250	KA-1297	
KX500	500	KA-1287	
KZ1000P Police	998	KA-1600	KN-401
VN750 Vulcan	732	KA-7586	KN-303
		KA-7586	KN-303C
VN800 Vulcan	800	KA-8095	KN-303
		KA-8095	KN-303C
VN800 Vulcan Classic	803	KA-8095	KN-303
		KA-8095	KN-303C
VN800 Vulcan Drifter	800	KA-8095	KN-303
		KA-8095	KN-303C
VN1500 Vulcan Classic	1500	KA-1596	KN-204
		KA-1596	KN-204C
VN1500 Vulcan Classic F/I	1500	KA-1596	KN-204
		KA-1596	KN-204C
VN1500 Vulcan Classic Tourer F/I	1500		KN-204
			KN-204C
VN1500 Vulcan Drifter	1500	KA-1596	KN-204
		KA-1596	KN-204C
VN1500 Vulcan Nomad	1500	KA-1596	KN-204
		KA-1596	KN-204C
VN1500 Vulcan Nomad F/I	1500	KA-1596	KN-204
		KA-1596	KN-204C
W650	650		KN-204
			KN-204C
ZG1000 Concours	1000	KA-9084	KN-401
ZG1200 Voyager XII	1185		KN-401
ZR7	750	KA-0850	KN-401
ZR7S	750	KA-0850	KN-401
ZR750 Zephyr	750	KA-0850	KN-401
ZRX1200	1200	KA-1199	KN-401
ZX6 Ninja	600		KN-303
			KN-303C
ZX6 Ninja	600 - exc. OE filter w/hole	KA-6093	KN-303
ZX6R Ninja	588	KA-6098	KN-303
		KA-6098	KN-303C
ZX7R Ninja	750	KA-7596	KN-303
		KA-7596	KN-303C
ZX9R Ninja	900	KA-9098	KN-303
		KA-9098	KN-303C
ZX11 Ninja	1100	KA-1093	KN-401
ZX12R Ninja	1200	KA-1299-1	KN-204
		KA-1299-1	KN-204C
ZZR600	600		KN-303
			KN-303C
ZZR600	600 - exc. OE filter w/hole	KA-6093	KN-303
2000 KAWASAKI			
EN500 Vulcan LTD	500	KA-5096	KN-303

*Indicates 2 filters required ♦ - Intake kit available - see page 80 Applications updated daily at knfilters.com

2000 KAWASAKI

Vehicle	Engine Type	Air Filter	Oil Filter
EN500 Vulcan LTD	500	KA-5096	KN-303C
EX250R Ninja	250	KA-2586	KN-401
EX500R Ninja	500	KA-5087	KN-303
		KA-5087	KN-303C
KAF300 Mule 550	300	KA-4093	KN-128
KAF620 Mule 2510 4x4	620	KA-4093	KN-128
KAF950 Mule 2510 Diesel	950	KA-6201	
KDX220R	220	KA-1287	
KEF300 Lakota	290	KA-2587	KN-123
KL250 Super Sherpa	250		KN-112
KLF220 Bayou	215	KA-2288	KN-123
KLF300 Bayou 4x4	300	KA-4093	KN-123
KLR250	250		KN-123
KLR650	650	KA-6589	KN-123
KLX300R	300	KA-1287	KN-112
KSF250 Mojave	249	KA-2587	KN-123
KVF300 Prairie 2x4	290	KA-4093	KN-303
		KA-4093	KN-303C
KVF300 Prairie 4x4	300	KA-4093	KN-303
		KA-4093	KN-303C
KVF400 Prairie 4x4	400	KA-4093	KN-303
		KA-4093	KN-303C
KX80	80	KA-8088	
KX100	100	KA-8088	
KX125	125	KA-1297	
KX250	250	KA-1297	
KX500	500	KA-1287	
VN750 Vulcan	732	KA-7586	KN-303
		KA-7586	KN-303C
VN800 Vulcan	800	KA-8095	KN-303
		KA-8095	KN-303C
VN800 Vulcan Classic	800	KA-8095	KN-303
		KA-8095	KN-303C
VN800 Vulcan Drifter	800	KA-8095	KN-303
		KA-8095	KN-303C
VN1500 Vulcan Classic	1500	KA-1596	KN-204
		KA-1596	KN-204C
VN1500 Vulcan Classic F/I	1500	KA-1596	KN-204
		KA-1596	KN-204C
VN1500 Vulcan Classic Tourer F/I	1500		KN-303
			KN-303C
VN1500 Vulcan Drifter	1500	KA-1596	KN-204
		KA-1596	KN-204C
VN1500 Vulcan Nomad	1500	KA-1596	KN-204
		KA-1596	KN-204C
VN1500 Vulcan Nomad F/I	1500	KA-1596	KN-303
		KA-1596	KN-303C
W650	650		KN-204
			KN-204C
ZG1000 Concours	1000	KA-9084	KN-401
ZG1200 Voyager XII	1185		KN-401

2000 KAWASAKI

Vehicle	Engine Type	Air Filter	Oil Filter
ZR7	750	KA-0850	KN-401
ZRX1100	1100	KA-1199	KN-401
ZX6 Ninja	600		KN-303
			KN-303C
ZX6 Ninja	600 - exc. OE filter w/hole	KA-6093	KN-303
ZX6R Ninja	600	KA-6098	KN-303
		KA-6098	KN-303C
ZX7R Ninja	750	KA-7596	KN-303
		KA-7596	KN-303C
ZX9R Ninja	900	KA-9098	KN-303
		KA-9098	KN-303C
ZX11 Ninja	1100	KA-1093	KN-401
ZX12R Ninja	1200	KA-1299-1	KN-204
		KA-1299-1	KN-204C
ZZR600	600		KN-303
			KN-303C
ZZR600	600 - exc. OE filter w/hole	KA-6093	KN-303
ZZR1100	1100	KA-1093	KN-401

1999 KAWASAKI

Vehicle	Engine Type	Air Filter	Oil Filter
EN500 Vulcan LTD	500	KA-5096	KN-303
		KA-5096	KN-303C
EX250R Ninja	250	KA-2586	KN-401
EX500R Ninja	500	KA-5087	KN-303
		KA-5087	KN-303C
KAF300 Mule 550	300	KA-4093	KN-128
KAF620 Mule 2510 4x4	620	KA-4093	KN-128
KLF220 Bayou	215	KA-2288	KN-123
KLF300 Bayou 2x4	290	KA-4093	KN-123
KLF300 Bayou 4x4	300	KA-4093	KN-123
KLR250	250		KN-123
KLR650	650	KA-6589	KN-123
KLX300R	300	KA-1287	KN-112
KVF300 Prairie 2x4	290	KA-4093	KN-303
		KA-4093	KN-303C
KVF300 Prairie 4x4	300	KA-4093	KN-303
		KA-4093	KN-303C
KVF400 Prairie 2x4	392	KA-4093	KN-303
		KA-4093	KN-303C
KVF400 Prairie 4x4	400	KA-4093	KN-303
		KA-4093	KN-303C
KX100	100	KA-8088	
KX125	125	KA-1297	
KX250	250	KA-1297	
VN750 Vulcan	732	KA-7586	KN-303
		KA-7586	KN-303C
VN800 Vulcan	800	KA-8095	KN-303
		KA-8095	KN-303C
VN800 Vulcan Classic	800	KA-8095	KN-303
		KA-8095	KN-303C
VN800 Vulcan Drifter	800	KA-8095	KN-303
		KA-8095	KN-303C
VN1500 Vulcan	1500	KA-1594	KN-303
		KA-1594	KN-303C
VN1500 Vulcan Classic	1500	KA-1596	KN-204
		KA-1596	KN-204C
VN1500 Vulcan Classic Tourer F/I	1500		KN-303
			KN-303C

*Indicates 2 filters required ♦ - Intake kit available - see page 80 Applications updated daily at knfilters.com

Vehicle	Engine Type	Air Filter	Oil Filter
1999 KAWASAKI			
VN1500 Vulcan Drifter	1500	KA-1596	KN-204
		KA-1596	KN-204C
VN1500 Vulcan Nomad	1500	KA-1596	KN-204
		KA-1596	KN-204C
ZG1000 Concours	1000	KA-9084	KN-401
ZG1200 Voyager XII	1185		KN-401
ZR1100 Zephyr	1100	KA-0006	KN-401
		KA-1192	KN-401
ZR1100 Zephyr RS	1100	KA-0006	KN-401
		KA-1192	KN-401
ZRX1100	1100	KA-1199	KN-401
ZX6 Ninja	600		KN-303
			KN-303C
ZX6 Ninja	600 - exc. OE filter w/hole	KA-6093	KN-303
ZX6R Ninja	600	KA-6098	KN-303
		KA-6098	KN-303C
ZX7R Ninja	750	KA-7596	KN-303
		KA-7596	KN-303C
ZX9R Ninja	900	KA-9098	KN-303
		KA-9098	KN-303C
ZX11 Ninja	1100	KA-1093	KN-401
ZX750	750		KN-303
			KN-303C
ZZR600	600		KN-303
			KN-303C
ZZR1100	1100	KA-1093	KN-401
1998 KAWASAKI			
EN500 Vulcan LTD	500	KA-5096	KN-303
		KA-5096	KN-303C
EX250R Ninja	250	KA-2586	KN-401
EX500R Ninja	500	KA-5087	KN-303
		KA-5087	KN-303C
KAF300 Mule 550	300	KA-4093	KN-128
KDX220R	220	KA-1287	
KLF220 Bayou	215	KA-2288	KN-123
KLF300 Bayou 2x4	290	KA-4093	KN-123
KLF300 Bayou 4x4	300	KA-4093	KN-123
KLR650	650	KA-6589	KN-123
KLX300R	300	KA-1287	KN-112
KVF400 Prairie 4x4	400	KA-4093	KN-303
		KA-4093	KN-303C
KX60	60	KA-6085	
KX125	125	KA-1297	
KX250	250	KA-1297	
VN750 Vulcan	732	KA-7586	KN-202
VN800 Vulcan	800	KA-8095	KN-303
		KA-8095	KN-303C
VN800 Vulcan Classic	800	KA-8095	KN-303
		KA-8095	KN-303C
VN1500 Vulcan	1500	KA-1594	KN-303
		KA-1594	KN-303C
VN1500 Vulcan Classic	1500	KA-1596	KN-303
		KA-1596	KN-303C
VN1500 Vulcan Nomad	1500	KA-1596	KN-303
		KA-1596	KN-303C

Vehicle	Engine Type	Air Filter	Oil Filter
1998 KAWASAKI			
ZG1000 Concours	1000	KA-9084	KN-401
ZG1200 Voyager XII	1185		KN-401
ZX6 Ninja	600		KN-303
			KN-303C
ZX6 Ninja	600 - exc. OE filter w/hole	KA-6093	KN-303
ZX6R Ninja	600	KA-6098	KN-303
		KA-6098	KN-303C
ZX7R Ninja	750	KA-7596	KN-303
		KA-7596	KN-303C
ZX9R Ninja	900	KA-9098	KN-303
		KA-9098	KN-303C
ZX11 Ninja	1100	KA-1093	KN-401
ZX750	750		KN-303
			KN-303C
1997 KAWASAKI			
EN500 Vulcan LTD	500	KA-5096	KN-303
		KA-5096	KN-303C
EX250R Ninja	250	KA-2586	KN-401
EX500R Ninja	500	KA-5087	KN-303
		KA-5087	KN-303C
KAF300 Mule 550	300	KA-4093	KN-128
KAF620 Mule 2500	620	KA-4093	KN-128
KAF620 Mule 2510 4x4	620	KA-4093	KN-128
KLF220 Bayou	215	KA-2288	KN-123
KLF300 Bayou 2x4	290	KA-4093	KN-123
KLR650	650	KA-6589	KN-123
KLX300R	300	KA-1287	KN-112
KVF400 Prairie 4x4	392	KA-4093	KN-303
		KA-4093	KN-303C
KX125	125	KA-1297	
KX250	250	KA-1297	
KX500	500	KA-1287	
VN750 Vulcan	732	KA-7586	KN-202
VN800 Vulcan	800	KA-8095	KN-303
		KA-8095	KN-303C
VN800 Vulcan Classic	800	KA-8095	KN-303
		KA-8095	KN-303C
VN1500 Vulcan	1500	KA-1594	KN-303
		KA-1594	KN-303C
VN1500 Vulcan 88	1500		KN-303
			KN-303C
VN1500 Vulcan Classic	1500	KA-1596	KN-303
		KA-1596	KN-303C
VN1500 Vulcan L	1500	KA-1594	KN-303
		KA-1594	KN-303C
ZG1000 Concours	1000	KA-9084	KN-401
ZG1200 Voyager XII	1185		KN-401
ZL600 Eliminator	600		KN-401
ZR1100 Zephyr RS	1100	KA-0006	KN-401
		KA-1192	KN-401
ZRX1100	1100	KA-1199	KN-401
ZX6 Ninja	600		KN-303
			KN-303C
ZX6 Ninja	600 - exc. OE filter w/hole	KA-6093	KN-303
ZX6R Ninja	600	KA-6095	KN-303
		KA-6095	KN-303C
ZX7R Ninja	750	KA-7596	KN-303
		KA-7596	KN-303C

*Indicates 2 filters required ♦ - Intake kit available - see page 80 Applications updated daily at knfilters.com

Vehicle	Engine Type	Air Filter	Oil Filter
1997 KAWASAKI			
ZX7RR Ninja	750	KA-7596	KN-303
		KA-7596	KN-303C
ZX9R Ninja	900	KA-9094	KN-303
		KA-9094	KN-303C
ZX11 Ninja	1100	KA-1093	KN-401
ZX600R Ninja	600	KA-7587	KN-401
ZZR600	600		KN-303
			KN-303C
1996 KAWASAKI			
EN500 Vulcan	500	KA-5090	KN-303
		KA-5090	KN-303C
EN500 Vulcan LTD	500	KA-5096	KN-303
		KA-5096	KN-303C
EX250R Ninja	250	KA-2586	KN-401
GPZ1100	1100		KN-401
KDX200	200	KA-1287	
KLF220 Bayou	215	KA-2288	KN-123
KLF300 Bayou 4x4	300	KA-4093	KN-123
KLF400 Bayou 4x4	392	KA-4093	KN-303
		KA-4093	KN-303C
KLR650	650	KA-6589	KN-123
KLX250R	250	KA-1287	KN-112
KLX650C	650	KA-6589	KN-123
KLX650R	650	KA-1287	KN-123
KX80	80	KA-8088	
KX500	500	KA-1287	
VN400 Vulcan	400	KA-8095	KN-303
		KA-8095	KN-303C
VN750 Vulcan	732	KA-7586	KN-202
VN800 Vulcan	800	KA-8095	KN-303
		KA-8095	KN-303C
VN800 Vulcan Classic	800	KA-8095	KN-303
		KA-8095	KN-303C
VN1500 Vulcan	1500	KA-1594	KN-303
		KA-1594	KN-303C
VN1500 Vulcan 88	1500		KN-303
			KN-303C
VN1500 Vulcan Classic	1500	KA-1596	KN-303
		KA-1596	KN-303C
VN1500 Vulcan L	1500	KA-1594	KN-303
		KA-1594	KN-303C
ZG1200 Voyager XII	1185		KN-401
ZL600 Eliminator	600		KN-401
ZX6 Ninja	600		KN-303
			KN-303C
ZX6 Ninja	600 - exc. OE filter w/hole	KA-6093	KN-303
ZX6R Ninja	600	KA-6095	KN-303
		KA-6095	KN-303C
ZX7R Ninja	750	KA-7596	KN-303
		KA-7596	KN-303C
ZX7RR Ninja	750	KA-7596	KN-303
		KA-7596	KN-303C
ZX9R Ninja	900	KA-9094	KN-303
		KA-9094	KN-303C
ZX11 Ninja	1100	KA-1093	KN-401
ZX600R Ninja	600	KA-7587	KN-401
ZX750	750		KN-303
			KN-303C

Vehicle	Engine Type	Air Filter	Oil Filter
1995 KAWASAKI			
EN500 Vulcan	500	KA-5090	KN-303
		KA-5090	KN-303C
EX250R Ninja	250	KA-2586	KN-401
EX500 Ninja	500	KA-5087	KN-303
		KA-5087	KN-303C
GPZ1100	1100		KN-401
KAF300 Mule 500	300	KA-4093	KN-128
KAF620 Mule 2510 4x4	620	KA-4093	KN-128
KDX200	200	KA-1287	
KEF300 Lakota	290	KA-2587	KN-123
KLF220 Bayou	215	KA-2288	KN-123
KLF300 Bayou 2x4	290	KA-4093	KN-123
KLF300 Bayou 4x4	300	KA-4093	KN-123
KLF400 Bayou 4x4	392	KA-4093	KN-303
		KA-4093	KN-303C
KLR650	650	KA-6589	KN-123
KLX250R	250	KA-1287	KN-112
KLX650C	650	KA-6589	KN-123
KLX650R	650	KA-1287	KN-123
KX500	500	KA-1287	
KZ1000P Police	998	KA-1600	KN-401
VN750 Vulcan	732	KA-7586	KN-202
VN800 Vulcan	800	KA-8095	KN-303
		KA-8095	KN-303C
VN1500 Vulcan	1500	KA-1594	KN-303
		KA-1594	KN-303C
VN1500 Vulcan 88	1500		KN-303
			KN-303C
VN1500 Vulcan VV	1500		KN-303
			KN-303C
ZG1000 Concours	1000	KA-9084	KN-401
ZR750 Zephyr	750	KA-0850	KN-401
ZR1100 Zephyr	1100	KA-0006	KN-401
		KA-1192	KN-401
ZX6 Ninja	600		KN-303
			KN-303C
ZX6 Ninja	600 - exc. OE filter w/hole	KA-6093	KN-303
ZX6R Ninja	600	KA-6095	KN-303
		KA-6095	KN-303C
ZX7 Ninja	750	KA-0007	KN-303
		KA-0007	KN-303C
ZX9R Ninja	900	KA-9094	KN-303
		KA-9094	KN-303C
ZX11 Ninja	1100	KA-1093	KN-401
ZX600R Ninja	600	KA-7587	KN-401
ZX750	750		KN-303
			KN-303C
ZXR400L	400	KA-4091	KN-303
		KA-4091	KN-303C
ZXR750R	750		KN-303
			KN-303C
ZZR1100	1100	KA-1093	KN-401
1994 KAWASAKI			
EN500 Vulcan	500	KA-5090	KN-303
		KA-5090	KN-303C
EX250R Ninja	250	KA-2586	KN-401
EX500 Ninja	500	KA-5087	KN-303
		KA-5087	KN-303C
KAF620 Mule 2500	620	KA-4093	KN-128
KDX250	246	KA-1287	
KLF220 Bayou	215	KA-2288	KN-123
KLF300 Bayou 2x4	290	KA-4093	KN-123

Vehicle	Engine Type	Air Filter	Oil Filter
1994 KAWASAKI			
KLF300 Bayou 4x4	300	KA-4093	KN-123
KLF400 Bayou 4x4	392	KA-4093	KN-303
		KA-4093	KN-303C
KLR650	650	KA-6589	KN-123
KLX250R	250	KA-1287	KN-112
KLX650C	650	KA-6589	KN-123
KLX650R	650	KA-1287	KN-123
KX500	500	KA-1287	
KZ1000P Police	998	KA-1600	KN-401
VN750 Vulcan	732	KA-7586	KN-202
VN750 Vulcan	745	KA-7586	KN-202
VN1500 Vulcan	1500	KA-1594	KN-303
		KA-1594	KN-303C
VN1500 Vulcan VV	1500		KN-303
			KN-303C
ZG1000 Concours	1000	KA-9084	KN-401
ZX6 Ninja	600		KN-303
			KN-303C
ZX6 Ninja	600 - exc. OE filter w/hole	KA-6093	KN-303
ZX7 Ninja	750	KA-0007	KN-303
		KA-0007	KN-303C
ZX7R Ninja	750	KA-0007	KN-303
		KA-0007	KN-303C
ZX9R Ninja	900	KA-9094	KN-303
		KA-9094	KN-303C
ZX11 Ninja	1100	KA-1093	KN-401
ZX600R Ninja	652	KA-7587	KN-401
ZX750	750		KN-303
			KN-303C
ZXR750R	750		KN-303
			KN-303C
ZZR600	600		KN-303
			KN-303C
ZZR600	600 - exc. OE filter w/hole	KA-6093	KN-303
1993 KAWASAKI			
EN500 Vulcan	500	KA-5090	KN-303
		KA-5090	KN-303C
EX250R Ninja	250	KA-2586	KN-401
EX500	500	KA-5087	KN-303
		KA-5087	KN-303C
KAF620 Mule 2520	620	KA-4093	KN-128
KDX200	200	KA-1287	
KDX250	246	KA-1287	
KLF220 Bayou	215	KA-2288	KN-123
KLF300 Bayou 2x4	290	KA-4093	KN-123
KLF300 Bayou 4x4	300	KA-4093	KN-123
KLF400 Bayou 4x4	392	KA-4093	KN-303
		KA-4093	KN-303C
KLR650	650	KA-6589	KN-123
KLX650C	650	KA-6589	KN-123
KLX650R	650	KA-1287	KN-123
VN750 Vulcan	732	KA-7586	KN-202
VN750 Vulcan	745	KA-7586	KN-202
VN1500 Vulcan	1500	KA-1594	KN-303
		KA-1594	KN-303C
VN1500 Vulcan 88	1500		KN-303
			KN-303C
VN1500 Vulcan Voyager	1500		KN-303
			KN-303C
ZG1000 Concours	1000	KA-9084	KN-401
ZR1100 Zephyr	1100	KA-0006	KN-401

Vehicle	Engine Type	Air Filter	Oil Filter
1993 KAWASAKI			
ZR1100 Zephyr	1100	KA-1192	KN-401
ZX6 Ninja	600		KN-303
			KN-303C
ZX6 Ninja	600 - exc. OE filter w/hole	KA-6093	KN-303
ZX7 Ninja	750	KA-0007	KN-303
		KA-0007	KN-303C
ZX7R Ninja	750	KA-0007	KN-303
		KA-0007	KN-303C
ZX11 Ninja	1100	KA-1093	KN-401
ZX11C Ninja	1198	KA-0004	KN-401
ZX600R Ninja	652	KA-7587	KN-401
ZX750	750		KN-303
			KN-303C
ZXR750R	750		KN-303
			KN-303C
ZZR400	400	KA-6093	KN-303
		KA-6093	KN-303C
ZZR1100	1100	KA-1093	KN-401
1992 KAWASAKI			
EN500 Vulcan	500	KA-5090	KN-303
		KA-5090	KN-303C
EX250R Ninja	250	KA-2586	KN-401
EX500	500	KA-5087	KN-303
		KA-5087	KN-303C
KLF300 Bayou 4x4	300	KA-4093	KN-123
KLR650	650	KA-6589	KN-123
VN750 Vulcan	745	KA-7586	KN-202
VN1500 Vulcan	1500	KA-1594	KN-303
		KA-1594	KN-303C
VN1500 Vulcan 88	1500		KN-303
			KN-303C
VN1500 Vulcan Voyager	1500		KN-303
			KN-303C
ZR750 Zephyr	750	KA-0850	KN-401
ZR1100 Zephyr	1100	KA-0006	KN-401
		KA-1192	KN-401
ZX6 Ninja	600		KN-303
			KN-303C
ZX7 Ninja	750		KN-303
			KN-303C
ZX7R Ninja	750		KN-303
			KN-303C
ZX11C Ninja	1198	KA-0004	KN-401
ZX600R Ninja	652	KA-7587	KN-401
ZZR1100	1100	KA-0004	KN-401
1991 KAWASAKI			
EX250R Ninja	250	KA-2586	KN-401
EX500	500	KA-5087	KN-303
		KA-5087	KN-303C
KDX250	246	KA-1287	
KLR250	250		KN-123
KSF250 Mojave	249	KA-2587	KN-123
KZ1000P Police	998	KA-1600	KN-401
VN750 Vulcan	745	KA-7586	KN-202
VN1500 Vulcan 88	1500		KN-303
			KN-303C
VN1500 Vulcan Voyager	1500		KN-303
			KN-303C
ZG1200 Voyager XII	1198		KN-401

*Indicates 2 filters required ♦ - Intake kit available - see page 80 Applications updated daily at knfilters.com

Vehicle	Engine Type	Air Filter	Oil Filter
1991 KAWASAKI			
ZR550 Zephyr	550	KA-0850	KN-401
ZR750 Zephyr	750	KA-0850	KN-401
ZX6 Ninja	600		KN-303
			KN-303C
ZX7 Ninja	750		KN-303
			KN-303C
ZX7R Ninja	750		KN-303
			KN-303C
ZX11C Ninja	1198	KA-0004	KN-401
ZX600R Ninja	652	KA-7587	KN-401
ZZR1100	1100	KA-0004	KN-401
1990 KAWASAKI			
EX250R Ninja	250	KA-2586	KN-401
EX500	500	KA-5087	KN-303
		KA-5087	KN-303C
KDX200	200	KA-1287	
KLF220 Bayou	215	KA-2288	KN-123
KLF300 Bayou 2x4	290	KA-2288	KN-123
KLF300 Bayou 4x4	300	KA-4093	KN-123
KX500	500	KA-1287	
VN750 Vulcan	745	KA-7586	KN-202
ZG1000 Concours	1000	KA-9084	KN-401
ZR550 Zephyr	550	KA-0850	KN-401
ZX6 Ninja	600		KN-303
			KN-303C
ZX7 Ninja	750	KA-7589	KN-401
ZX11C Ninja	1198	KA-0004	KN-401
ZX600R Ninja	652	KA-7587	KN-401
ZX750	750		KN-401
ZX750 Ninja	750	KA-7587	KN-401
ZX1000 Ninja	1000	KA-1088	KN-401
1989 KAWASAKI			
EN450	450		KN-202
EX250R Ninja	250	KA-2586	KN-401
EX500	500	KA-5087	KN-202
KDX200	200	KA-1287	
KLF300 Bayou 2x4	290	KA-2288	KN-123
KLF300 Bayou 4x4	300	KA-4093	KN-123
KLR600	600	KA-0009	KN-123
KLR650	650	KA-6589	KN-123
KSF250 Mojave	249	KA-2587	KN-123
KX250	250	KA-1287	
KX500	500	KA-1287	
VN750 Vulcan	745	KA-7586	KN-202
ZX7 Ninja	750	KA-7589	KN-303
		KA-7589	KN-303C
ZX10 Ninja	1000	KA-1088	KN-401
ZX600 Ninja	652	KA-7587	KN-401
ZX750	750		KN-401
ZX750 Ninja	750	KA-7587	KN-401
ZX1000 Ninja	1000	KA-1088	KN-401
1988 KAWASAKI			
EL250 Eliminator	250	KA-7587	KN-401
EL250 Eliminator SE	250	KA-7587	KN-401
EX500	500	KA-5087	KN-202
GPX600R	600		KN-401
KAF450 Mule 1000	450		KN-303
			KN-303C
KLF220 Bayou	215	KA-2288	KN-123
KLF300 Bayou 2x4	290	KA-2288	KN-123
KLR600	600	KA-0009	KN-123
KLR650	650	KA-6589	KN-123

Vehicle	Engine Type	Air Filter	Oil Filter
1988 KAWASAKI			
KX250	250	KA-1287	
VN750 Vulcan	745	KA-7586	KN-202
VN1500 Vulcan	1500		KN-303
			KN-303C
VN1500 Vulcan	1500 - exc. SE	KA-1594	KN-303
VN1500 Vulcan 88	1500		KN-303
			KN-303C
VN1500 Vulcan 88 SE	1500		KN-303
			KN-303C
VN1500 Vulcan Voyager	1500		KN-303
			KN-303C
ZG1000 Concours	1000	KA-9084	KN-401
ZX10 Ninja	1000	KA-1088	KN-401
ZX600 Ninja	652	KA-7587	KN-401
ZX750 Ninja	750	KA-7587	KN-401
1987 KAWASAKI			
EN450	450		KN-202
EX250R Ninja	250	KA-2586	KN-401
EX500	500	KA-5087	KN-202
GPZ1000RX	1000	KA-0002	KN-401
KLF300 Bayou 2x4	290		KN-123
KLR650	650	KA-6589	KN-123
KSF250 Mojave	249	KA-2587	KN-123
KXF250 Tecate 4	250	KA-1780	
KZ1000P Police	998	KA-1600	KN-401
VN750 Vulcan	745	KA-7586	KN-202
VN1500 Vulcan	1500		KN-303
			KN-303C
VN1500 Vulcan	1500 - exc. SE	KA-1594	KN-303
VN1500 Vulcan 88	1500		KN-303
			KN-303C
VN1500 Vulcan 88 SE	1500		KN-303
			KN-303C
VN1500 Vulcan Voyager	1500		KN-303
			KN-303C
ZG1000 Concours	1000	KA-9084	KN-401
ZL1000 Eliminator	1000	KA-9084	KN-401
ZX600 Ninja	652	KA-0850	KN-401
ZX750 Ninja	750	KA-7587	KN-401
ZX1000R Ninja	1000	KA-0002	KN-401
1986 KAWASAKI			
EN450	450		KN-202
EX250R Ninja	250	KA-2586	KN-401
GPZ600R	600		KN-401
GPZ900R	900		KN-401
GPZ1000RX	1000	KA-0002	KN-401
KL600	600		KN-123
KLF300 Bayou 2x4	290		KN-123
KLR250	250		KN-123
KLR600	600		KN-123
KXT250 Tecate	250	KA-1780	
KZ1000P Police	998	KA-1600	KN-401
VN750 Vulcan	750	KA-7586	KN-202
ZG1000 Concours	1000	KA-9084	KN-401
ZG1200 Voyager XII	1198		KN-401
ZL600	600		KN-401
ZL900 Eliminator	900	KA-9084	KN-401

*Indicates 2 filters required ♦ - Intake kit available - see page 80 Applications updated daily at knfilters.com

Vehicle	Engine Type	Air Filter	Oil Filter
1986 KAWASAKI			
ZN1300 Voyager	1300	KA-0883	KN-126
ZX600 Ninja	652	KA-0850	KN-401
ZX900 Ninja	900	KA-9084	KN-401
ZX1000R Ninja	1000	KA-0002	KN-401
1985 KAWASAKI			
EN450	450		KN-202
GPZ600R	600		KN-401
GPZ750	750	KA-7583	KN-401
GPZ750R	750		KN-401
GPZ900R	900		KN-401
GPZ1000RX	1000	KA-0002	KN-401
KLR600	600		KN-123
VN700 Vulcan	700		KN-202
ZL900 Eliminator	900	KA-9084	KN-401
ZN700 LTD	700	KA-7580	KN-401
ZN1100B LTD	1100		KN-401
ZN1300 Voyager	1300	KA-0883	KN-126
ZX550 GPZ	550	KA-0850	KN-401
ZX600 Ninja	652	KA-0850	KN-401
ZX750 Turbo	750		KN-401
ZX900 Ninja	900	KA-9084	KN-401
1984 KAWASAKI			
GPZ750	750	KA-7583	KN-401
GPZ900R	900		KN-401
GPZ1100	1100	KA-1183	KN-401
KL600	600		KN-123
KZ550 LTD	550	KA-0850	KN-401
KZ700	700	KA-7580	KN-401
KZ750K LTD Twin	750	KA-7500	KN-126
ZN700 LTD	700	KA-7580	KN-401
ZN1100B LTD	1100		KN-401
ZN1300 Voyager	1300	KA-0883	KN-126
ZX550 GPZ	550	KA-0850	KN-401
ZX750 Turbo	750		KN-401
ZX900 Ninja	900	KA-9084	KN-401
1983 KAWASAKI			
GPZ750	750	KA-7583	KN-401
GPZ1100	1100	KA-1183	KN-401
KL250	250		KN-123
KZ440A	440		KN-401
KZ440D	440		KN-401
KZ550 Spectre	550	KA-0850	KN-401
KZ550A	550	KA-0850	KN-401
KZ550C LTD	550	KA-0850	KN-401
KZ550H GP	550	KA-1700	KN-401
KZ650H CSR	650		KN-401
KZ650H CSR	650 - US	KA-7580	KN-401
KZ750F LTD	750	KA-7583	KN-401
KZ750H LTD	750	KA-7580	KN-401
KZ750K LTD Twin	750	KA-7500	KN-126
KZ750L	750	KA-7583	KN-401
KZ1100A	1100	KA-1600	KN-401
KZ1100D Spectre	1100	KA-1600	KN-401
ZX550 GPZ	550		KN-401
1982 KAWASAKI			
GPZ750	750	KA-7583	KN-401
KL250	250		KN-123
KZ440A	440		KN-401
KZ440D	440		KN-401
KZ440G	440		KN-401
KZ550A	550	KA-0850	KN-401
KZ550C LTD	550	KA-0850	KN-401
KZ550H GP	550	KA-1700	KN-401
KZ650H CSR	650	KA-7580	KN-401
KZ750E	750	KA-7580	KN-401
KZ750H LTD	750	KA-7580	KN-401
KZ750M CSR Twin	750	KA-7500	KN-126
KZ750N Spectre	750	KA-7583	KN-401
KZ1000J	1000	KA-1600	KN-401
KZ1000K LTD	1000	KA-1600	KN-401
KZ1000M CSR	1000	KA-1600	KN-401
KZ1000P Police	998	KA-1600	KN-401
KZ1100A	1100	KA-1600	KN-401
KZ1100D Spectre	1100	KA-1600	KN-401
KZ1300	1300	KA-1350	KN-126
Z440 LTD	440		KN-401
Z550 LTD	550		KN-401
Z550F	550		KN-401
Z1000 LTD	1000		KN-303
			KN-303C
ZX550 GPZ	550		KN-401
1981 KAWASAKI			
GPZ550	550		KN-401
KL250	250		KN-123
KZ250	250		KN-123
KZ440A	440		KN-401
KZ440B	440		KN-401
KZ440D	440		KN-401
KZ550A	550	KA-0850	KN-401
KZ550C LTD	550	KA-0850	KN-401
KZ550D GP	550	KA-0850	KN-401
KZ650H CSR	650	KA-7580	KN-401
KZ750E	750	KA-7580	KN-401
KZ750H LTD	750	KA-7580	KN-401
KZ1000 LTD	1000	KA-1600	KN-401
KZ1000J	1000	KA-1600	KN-126
KZ1000M CSR	1000	KA-1600	KN-401
KZ1100A	1100	KA-1600	KN-401
KZ1300	1300	KA-1350	KN-126
Z440 LTD	440		KN-401
Z1000	1000		KN-303
			KN-303C
Z1000 LTD	1000		KN-303
			KN-303C
1980 KAWASAKI			
KL250	250		KN-123
KZ250	250		KN-123
KZ440A	440		KN-401
KZ440B	440		KN-401
KZ550A	550	KA-0850	KN-401
KZ550C LTD	550	KA-0850	KN-401
KZ650E LTD	650	KA-1200	KN-401
KZ650F	650	KA-1200	KN-401
KZ750E	750	KA-7580	KN-401
KZ750G LTD Twin	750	KA-7500	KN-126
KZ750H LTD	750	KA-7580	KN-401
KZ1000 LTD	1000	KA-8077	KN-126
KZ1000A	1000	KA-8077	KN-126
KZ1000D Z1-R	1000	KA-8077	KN-126
KZ1000E	1000	KA-1150	KN-126
KZ1000G Classic	1000		KN-126
KZ1300	1300	KA-1350	KN-126
Z200	200		KN-123

*Indicates 2 filters required ♦ - Intake kit available - see page 80 Applications updated daily at knfilters.com

Vehicle	Engine Type	Air Filter	Oil Filter
1979 KAWASAKI			
KZ400B	400		KN-401
KZ400H	400		KN-401
KZ650B	650	KA-1200	KN-401
KZ650C Custom	650	KA-1200	KN-401
KZ650D SR	650	KA-1200	KN-401
KZ750 Twin	750	KA-0750	KN-126
KZ1000 LTD	1000	KA-8077	KN-126
KZ1000A	1000	KA-8077	KN-126
KZ1000D Z1-R	1000		KN-126
KZ1000E	1000	KA-1150	KN-126
KZ1300	1300	KA-1350	KN-126
Z400 LTD	400		KN-401
Z1000 ST	1000		KN-126
1978 KAWASAKI			
KL250	250		KN-123
KZ400A	400	KA-1200	KN-401
KZ400B	400		KN-401
KZ400C	400		KN-401
KZ650B	650	KA-1200	KN-401
KZ650C Custom	650	KA-1200	KN-401
KZ650D SR	650	KA-1200	KN-401
KZ750 Twin	750	KA-0750	KN-126
KZ1000 LTD	1000	KA-8077	KN-126
KZ1000 Police	998	KA-8077	KN-126
KZ1000A	1000	KA-8077	KN-126
KZ1000D Z1-R	1000	KA-8077	KN-126
KZ1000E	1000		KN-126
Z1R	1000		KN-126
1977 KAWASAKI			
KZ650B	650	KA-1200	KN-401
KZ650C Custom	650	KA-1200	KN-401
KZ750 Twin	750	KA-0750	KN-126
KZ900A	900	KA-8076	KN-126
KZ1000 LTD	1000	KA-8077	KN-126
KZ1000A	1000	KA-8077	KN-126
1976 KAWASAKI			
KZ400D	400	KA-1200	KN-401
KZ400S	400	KA-1200	KN-401
KZ750 Twin	750	KA-0750	KN-126
KZ900A	900	KA-8076	KN-126
KZ900B LTD	900	KA-8076	KN-126
Z1F	900		KN-401
1975 KAWASAKI			
H1	500	KA-1000	
H2	750	KA-1100	
KZ400D	400	KA-1150	KN-401
KZ400S	400	KA-1150	KN-401
Z1	900	KA-0800	KN-126
Z1000	1000		KN-126
1974 KAWASAKI			
H1	500	KA-1000	
H2	750	KA-1100	
KZ400D	400	KA-1150	KN-401
Z1	900	KA-0800	KN-126
Z1000	1000		KN-126
1973 KAWASAKI			
H1	500	KA-1000	
H2	750	KA-1100	
Z1	900	KA-0800	KN-126

Vehicle	Engine Type	Air Filter	Oil Filter
1972 KAWASAKI			
H1	500	KA-1000	
H2	750	KA-1100	
1971 KAWASAKI			
H1	500	KA-1000	
1970 KAWASAKI			
H1	500	KA-1000	
1969 KAWASAKI			
H1	500	KA-1000	
2013 KIA			
Forte	2.0L L4 F/I	33-2380♦	HP-1004
Forte	2.4L L4 F/I	33-2380	HP-1004
Forte Koup	2.4L L4 F/I	33-2380♦	HP-1004
Optima	1.7L L4 DSL	33-2448	
Optima	2.0L L4 F/I	33-2448♦	HP-1004
Optima	2.4L L4 F/I	33-2448	HP-1004
Rio	1.6L L4 F/I	33-2472	HP-1004
Rio5	1.6L L4 F/I	33-2472	HP-1004
Sedona	3.5L V6 F/I	33-2368	
Sorento	2.4L L4 F/I	33-2448	HP-1004
Sorento	3.5L V6 F/I	33-2448	
Soul	1.6L L4 DSL	33-2960	
Soul	1.6L L4 F/I	33-2472	HP-1004
Soul	2.0L L4 F/I	33-2472	HP-1004
Sportage	2.0L L4 DSL	33-2451	
Sportage	2.0L L4 F/I	33-2469	HP-1004
Sportage	2.4L L4 F/I	33-2451	HP-1004
2012 KIA			
cee d	1.4L L4 F/I - from 5/12	33-2451	
cee d	1.4L L4 F/I - to 4/12	33-2380	
cee d	1.6L L4 DSL	33-2380	
cee d	1.6L L4 F/I - from 5/12	33-2451	
cee d	1.6L L4 F/I - to 4/12	33-2380	
Forte	2.0L L4 F/I	33-2380♦	HP-1004
Forte	2.4L L4 F/I	33-2380	HP-1004
Forte Koup	2.4L L4 F/I	33-2380♦	HP-1004
Optima	1.7L L4 DSL	33-2448	
Optima	2.0L L4 F/I	33-2448♦	HP-1004
Optima	2.4L L4 F/I	33-2448	HP-1004
Rio	1.1L L4 DSL	33-2472	
Rio	1.4L L4 DSL	33-2472	
Rio	1.4L L4 F/I	33-2472	
Rio	1.6L L4 F/I	33-2472	HP-1004
Rio5	1.6L L4 F/I	33-2472	HP-1004
Rondo	2.4L L4 F/I		HP-1004
Rondo	2.7L V6 F/I		HP-1010
Sedona	3.5L V6 F/I	33-2368	
Sorento	2.2L L4 DSL	33-2969	
Sorento	2.4L L4 F/I	33-2448	HP-1004
Sorento	3.5L V6 F/I	33-2448	
Soul	1.6L L4 DSL	33-2960	
Soul	1.6L L4 F/I	33-2472	HP-1004
Soul	2.0L L4 F/I	33-2472♦	HP-1004
Sportage	1.6L L4 F/I	33-2451	
Sportage	1.7L L4 DSL	33-2451	
Sportage	2.0L L4 DSL	33-2451	
Sportage	2.0L L4 F/I		HP-1004
Sportage	2.0L L4 F/I - Non-US	33-2451	HP-1004
Sportage	2.0L L4 F/I - US	33-2469	HP-1004
Sportage	2.4L L4 F/I	33-2451	HP-1004
Venga	1.6L L4 DSL	33-2960	
Venga	1.6L L4 F/I	33-2960	

*Indicates 2 filters required ♦ - Intake kit available - see page 80 Applications updated daily at knfilters.com

AIR & OIL FILTERS

Vehicle	Engine Type	Air Filter	Oil Filter
2011 KIA			
Carens	2.0L L4 F/I	33-2934	
cee d	1.6L L4 DSL	33-2380	
cee d	1.6L L4 F/I	33-2380 ♦	
Forte	2.0L L4 F/I	33-2380 ♦	HP-1004
Forte	2.4L L4 F/I	33-2380	HP-1004
Forte Koup	2.4L L4 F/I	33-2380 ♦	HP-1004
Optima	2.0L L4 F/I	33-2448 ♦	HP-1004
Optima	2.4L L4 F/I	33-2448	HP-1004
Picanto	1.0L L4 F/I - to 3/11	33-2930	
Picanto	1.1L L4 F/I - to 3/11	33-2930	
Rio	1.1L L4 DSL	33-2472	
Rio	1.4L L4 DSL	33-2472	
Rio	1.4L L4 F/I - from 8/11	33-2472	
Rio	1.4L L4 F/I - to 7/11	33-2354	
Rio	1.5L L4 DSL	33-2354	
Rio	1.6L L4 F/I		HP-1004
Rio	1.6L L4 F/I - Non-US, from 8/11	33-2472	HP-1004
Rio	1.6L L4 F/I - Non-US, to 7/11	33-2354	HP-1004
Rio	1.6L L4 F/I - US	33-2354	HP-1004
Rio5	1.6L L4 F/I	33-2354	HP-1004
Rondo	2.4L L4 F/I	33-2934	HP-1004
Rondo	2.7L V6 F/I	33-2934	HP-1010
Sedona	3.5L V6 F/I	33-2368	
Sedona	3.8L V6 F/I	33-2368	
Sorento	2.2L L4 DSL	33-2969	
Sorento	2.4L L4 F/I	33-2448	HP-1004
Sorento	3.5L V6 F/I	33-2448	
Soul	1.6L L4 DSL	33-2960	
Soul	1.6L L4 F/I	33-2960	HP-1004
Soul	2.0L L4 F/I	33-2960 ♦	HP-1004
Sportage	1.6L L4 F/I	33-2451	
Sportage	1.7L L4 DSL	33-2451	
Sportage	2.0L L4 F/I		HP-1004
Sportage	2.0L L4 F/I - Non-US	33-2451	HP-1004
Sportage	2.0L L4 F/I - US	33-2469	HP-1004
Sportage	2.4L L4 F/I	33-2451	HP-1004
Venga	1.6L L4 DSL	33-2960	
Venga	1.6L L4 F/I	33-2960	
2010 KIA			
Borrego	3.8L V6 F/I	33-2447	
Borrego	4.6L V8 F/I	33-2447	
cee d	1.6L L4 F/I	33-2380 ♦	
Forte	2.0L L4 F/I	33-2380 ♦	HP-1004
Forte	2.4L L4 F/I	33-2380	HP-1004
Forte Koup	2.4L L4 F/I	33-2380 ♦	HP-1004
Optima	2.4L L4 F/I	33-2934	HP-1004
Optima	2.7L V6 F/I	33-2934	HP-1010
Picanto	1.1L L4 F/I	33-2930	
Rio	1.4L L4 F/I	33-2354	
Rio	1.5L L4 DSL	33-2354	
Rio	1.6L L4 F/I	33-2354	HP-1004
Rio5	1.6L L4 F/I	33-2354	HP-1004
Rondo	2.4L L4 F/I	33-2934	HP-1004
Rondo	2.7L V6 F/I	33-2934	HP-1010
Sedona	3.8L V6 F/I	33-2368	
Sorento	2.2L L4 DSL	33-2969	
Sorento	2.4L L4 F/I	33-2448	
Sorento	3.5L V6 F/I	33-2448	
Soul	1.6L L4 DSL	33-2960	
Soul	1.6L L4 F/I	33-2960	HP-1004
Soul	2.0L L4 F/I	33-2960 ♦	HP-1004
Sportage	1.6L L4 F/I	33-2451	

Vehicle	Engine Type	Air Filter	Oil Filter
2010 KIA			
Sportage	2.0L L4 DSL	33-2201	
Sportage	2.0L L4 F/I		HP-1004
Sportage	2.0L L4 F/I - Non-US, from 5/10	33-2451	HP-1004
Sportage	2.0L L4 F/I - US	33-2201	HP-1004
Sportage	2.7L V6 F/I	33-2201	HP-1008
2009 KIA			
Amanti	3.8L V6 F/I	33-2390	HP-7022
Borrego	3.8L V6 F/I	33-2447	
Borrego	4.6L V8 F/I	33-2447	
Carens	2.0L L4 F/I	33-2934	
Optima	2.4L L4 F/I	33-2934	HP-1004
Optima	2.7L V6 F/I	33-2934	HP-1008
Rio	1.4L L4 F/I	33-2354	
Rio	1.5L L4 DSL	33-2354	
Rio	1.6L L4 F/I	33-2354	HP-1004
Rio5	1.6L L4 F/I	33-2354	HP-1004
Rondo	2.4L L4 F/I	33-2934	HP-1004
Rondo	2.7L V6 F/I	33-2934	HP-1008
Sedona	3.8L V6 F/I	33-2368	HP-7022
Sorento	2.2L L4 DSL	33-2969	
Sorento	3.3L V6 F/I	33-2271	
Sorento	3.8L V6 F/I	33-2271	
Soul	1.6L L4 DSL	33-2960	
Soul	1.6L L4 F/I	33-2960	
Spectra	2.0L L4 F/I	33-2201	HP-1004
Spectra5	2.0L L4 F/I	33-2201	HP-1004
Sportage	2.0L L4 DSL	33-2201	
Sportage	2.0L L4 F/I	33-2201	HP-1004
Sportage	2.7L V6 F/I	33-2201	HP-1008
2008 KIA			
Amanti	3.8L V6 F/I	33-2390	HP-7022
cee d	1.6L L4 F/I	33-2380 ♦	
Magentis	2.7L V6 F/I - Non-US	33-2198	
Optima	2.4L L4 F/I	33-2934	HP-1004
Optima	2.7L V6 F/I	33-2934	HP-1008
Rio	1.4L L4 F/I	33-2354	
Rio	1.5L L4 DSL	33-2354	
Rio	1.6L L4 F/I	33-2354	HP-1004
Rio	1.6L L4 F/I - Non-US	33-2196	HP-1004
Rio5	1.6L L4 F/I	33-2354	HP-1004
Rondo	2.4L L4 F/I	33-2934	HP-1004
Rondo	2.7L V6 F/I	33-2934	HP-1008
Sedona	3.8L V6 F/I	33-2368	HP-7022
Sorento	2.5L L4 DSL	33-2271	
Sorento	3.3L V6 F/I	33-2271	HP-7022
Sorento	3.8L V6 F/I	33-2271	HP-7022
Soul	1.6L L4 DSL	33-2960	
Soul	1.6L L4 F/I	33-2960	
Spectra	2.0L L4 F/I	33-2201 ♦	HP-1004
Spectra5	2.0L L4 F/I	33-2201	HP-1004
Sportage	2.0L L4 DSL	33-2201	
Sportage	2.0L L4 F/I	33-2201	HP-1004
Sportage	2.7L V6 F/I	33-2201	HP-1008
2007 KIA			
Amanti	3.8L V6 F/I	33-2390	HP-7022
Carnival	2.9L L4 DSL	33-2831	
cee d	1.6L L4 DSL	33-2380	
cee d	1.6L L4 F/I	33-2380 ♦	
cee d	2.0L L4 DSL	33-2380	
cee d	2.0L L4 F/I	33-2380 ♦	
Magentis	2.7L V6 F/I - Non-US	33-2198	
Optima	2.4L L4 F/I	33-2934	HP-1004

*Indicates 2 filters required ♦ - Intake kit available - see page 80 Applications updated daily at knfilters.com

Partial Listing - Complete List of Vehicles and Applications at knfilters.com

Vehicle	Engine Type	Air Filter	Oil Filter
2007 KIA			
Optima	2.7L V6 F/I	33-2934	HP-1008
Picanto	1.1L L4 DSL - OEM 2811307100	33-2930	
Picanto	1.1L L4 F/I	33-2930	
Rio	1.4L L4 F/I	33-2354	
Rio	1.5L L4 DSL	33-2354	
Rio	1.6L L4 F/I	33-2354	HP-1004
Rio	1.6L L4 F/I - Non-US	33-2196	HP-1004
Rio5	1.6L L4 F/I	33-2354	HP-1004
Rondo	2.4L L4 F/I	33-2934	HP-1004
Rondo	2.7L V6 F/I	33-2934	HP-1008
Sedona	3.8L V6 F/I	33-2368	HP-7022
Sorento	2.5L L4 DSL	33-2271	
Sorento	3.3L V6 F/I	33-2271	
Sorento	3.8L V6 F/I	33-2271	HP-7022
Spectra	2.0L L4 F/I	33-2201 ♦	HP-1004
Spectra5	2.0L L4 F/I	33-2201	HP-1004
Sportage	2.0L L4 DSL	33-2201	
Sportage	2.0L L4 F/I	33-2201	HP-1004
Sportage	2.7L V6 F/I	33-2201	HP-1008
2006 KIA			
Amanti	3.5L V6 F/I	33-2199	HP-1004
cee d	1.4L L4 F/I	33-2380	
cee d	1.6L L4 DSL	33-2380	
cee d	1.6L L4 F/I	33-2380	
cee d	2.0L L4 DSL	33-2380	
cee d	2.0L L4 F/I	33-2380 ♦	
Optima	2.4L L4 F/I		HP-1004
Optima	2.4L L4 F/I - VIN 3	33-2934	HP-1004
Optima	2.4L L4 F/I - VIN 6	33-2188	HP-1004
Optima	2.7L V6 F/I	33-2188	HP-1008
Rio	1.4L L4 F/I	33-2354	
Rio	1.5L L4 DSL	33-2354	
Rio	1.6L L4 F/I	33-2354	HP-1004
Rio	1.6L L4 F/I - Non-US	33-2196	HP-1004
Rio5	1.6L L4 F/I	33-2354	HP-1004
Sedona	3.8L V6 F/I	33-2368	HP-7022
Sorento	2.4L L4 F/I	33-2271	
Sorento	2.5L L4 DSL	33-2271	
Sorento	3.3L V6 F/I	33-2271	
Sorento	3.5L V6 F/I	33-2271	HP-1004
Spectra	2.0L L4 F/I	33-2201 ♦	HP-1004
Spectra5	2.0L L4 F/I	33-2201 ♦	HP-1004
Sportage	2.0L L4 DSL	33-2201	
Sportage	2.0L L4 F/I	33-2201	HP-1004
Sportage	2.7L V6 F/I	33-2201	HP-1008
2005 KIA			
Amanti	3.5L V6 F/I	33-2199	HP-1004
Carnival	2.5L V6 F/I	E-2013	
Carnival	2.9L L4 DSL	33-2831	
Optima	2.4L L4 F/I	33-2188	HP-1004
Optima	2.7L V6 F/I	33-2188	HP-1008
Rio	1.4L L4 F/I	33-2196	
Rio	1.5L L4 DSL	33-2196	
Rio	1.5L L4 F/I	33-2196	
Rio	1.6L L4 F/I	33-2196	HP-1008
Sedona	3.5L V6 F/I	33-2268	HP-1004
Sorento	2.4L L4 F/I	33-2271	
Sorento	2.5L L4 DSL	33-2271	
Sorento	3.5L V6 F/I	33-2271	HP-1004
Spectra	2.0L L4 F/I	33-2201 ♦	HP-1004
Spectra5	2.0L L4 F/I	33-2201 ♦	HP-1004
Sportage	2.0L L4 DSL	33-2201	
2005 KIA			
Sportage	2.0L L4 F/I	33-2201	HP-1004
Sportage	2.7L V6 F/I	33-2201	HP-1008
2004 KIA			
Amanti	3.5L V6 F/I	33-2199	HP-1004
Optima	2.4L L4 F/I	33-2188	HP-1004
Optima	2.7L V6 F/I	33-2188	HP-1008
Rio	1.3L L4 F/I	33-2196	
Rio	1.5L L4 F/I	33-2196	
Rio	1.6L L4 F/I	33-2196	HP-1008
Sedona	3.5L V6 F/I	33-2268	HP-1004
Sorento	2.4L L4 F/I	33-2271	
Sorento	2.5L L4 DSL	33-2271	
Sorento	3.5L V6 F/I	33-2271	HP-1004
Spectra	1.8L L4 F/I	33-2169	HP-1008
Spectra	2.0L L4 F/I		HP-1004
Sportage	2.0L L4 DSL	33-2168	
Sportage	2.0L L4 F/I	33-2168	
2003 KIA			
Optima	2.4L L4 F/I	33-2188	HP-1004
Optima	2.7L V6 F/I	33-2188	HP-1008
Rio	1.3L L4 F/I	33-2196	
Rio	1.5L L4 F/I	33-2196	
Rio	1.6L L4 F/I	33-2196	HP-1008
Sedona	3.5L V6 F/I	33-2268	HP-1004
Sorento	2.4L L4 F/I	33-2271	
Sorento	2.5L L4 DSL	33-2271	
Sorento	3.5L V6 F/I	33-2271	HP-1004
Spectra	1.8L L4 F/I	33-2169	HP-1008
Sportage	2.0L L4 F/I	33-2168	
2002 KIA			
Magentis	2.7L V6 F/I		HP-1008
Optima	2.4L L4 F/I	33-2188	HP-1004
Optima	2.7L V6 F/I	33-2188	HP-1008
Rio	1.3L L4 F/I	33-2196	
Rio	1.5L L4 F/I	33-2196	HP-1008
Sedona	2.9L L4 DSL - Non-US	33-2831	
Sedona	3.5L V6 F/I	33-2268	HP-1004
Sephia	1.8L L4 F/I	33-2169	
Sorento	2.4L L4 F/I	33-2271	
Spectra	1.8L L4 F/I	33-2169	HP-1008
Sportage	2.0L L4 F/I	33-2168	HP-1006
2001 KIA			
Optima	2.4L L4 F/I	33-2188	HP-1004
Optima	2.5L V6 F/I	33-2188	HP-1004
Rio	1.3L L4 F/I	33-2196	
Rio	1.5L L4 F/I	33-2196	HP-1008
Sedona	2.9L L4 DSL - Non-US	33-2831	
Sephia	1.5L L4 F/I	33-2169	
Sephia	1.8L L4 F/I	33-2169	HP-1008
Shuma	1.5L L4 F/I	33-2169	
Spectra	1.8L L4 F/I	33-2169	HP-1008
Sportage	2.0L L4 F/I	33-2168	HP-1006
2000 KIA			
Pride	1.3L L4 F/I	33-2222	
Rio	1.3L L4 F/I	33-2196	
Sephia	1.5L L4 F/I	33-2169	
Sephia	1.8L L4 F/I	33-2169	HP-1008
Spectra	1.8L L4 F/I	33-2169	HP-1008
Sportage	2.0L L4 F/I	33-2168	HP-1006
1999 KIA			
Sephia	1.8L L4 F/I	33-2169	HP-1008

*Indicates 2 filters required ♦ - Intake kit available - see page 80 Applications updated daily at knfilters.com

AIR & OIL FILTERS

Vehicle	Engine Type	Air Filter	Oil Filter
1999 KIA			
Sportage	2.0L L4 F/I	33-2168	HP-1006
1998 KIA			
Pride	1.3L L4 F/I	33-2222	
Sephia	1.8L L4 F/I	33-2169	HP-1008
Sportage	2.0L L4 F/I	33-2168	HP-1006
1997 KIA			
Sephia	1.8L L4 F/I	33-2169	HP-1008
Sportage	2.0L L4 F/I	33-2168	HP-1006
1996 KIA			
Sephia	1.8L L4 F/I	33-2169	HP-1008
Sportage	2.0L L4 F/I	33-2168	HP-1006
1995 KIA			
Sephia	1.6L L4 F/I	33-2034	HP-1008
Sportage	2.0L L4 F/I		HP-1006
Sportage	2.0L L4 F/I - DOHC	33-2026	HP-1006
Sportage	2.0L L4 F/I - Non-US	33-2168	HP-1006
Sportage	2.0L L4 F/I - US, SOHC	33-2168	HP-1006
1994 KIA			
Pride	1.3L L4 F/I	33-2222	
1991 KIA			
Pride	1.3L L4 F/I	33-2222	
2013 KTM			
125 Duke	125	KT-1211	KN-155
200 Duke	200	KT-1211	KN-155
690 Enduro R	690	KT-6908	
690 Enduro R	690 - 1st Filter	KT-6908	KN-155
Duke R	690	KT-6907	
2012 KTM			
125 Duke	125	KT-1211	KN-155
200 Duke	200	KT-1211	KN-155
250 EXC-F	250		KN-655
250 EXC-F Six Days	250		KN-655
250 SXF	250		KN-655
250 XCF	250		KN-655
250 XCF-W	250		KN-655
350 Freeride	350		KN-652
350 SX-F	350		KN-652
450 SMR	449		KN-652
450 SXF	450		KN-652
450 XC-W	450		KN-655
500 EXC	500		KN-655
500 EXC Six Days	500		KN-655
500 XC-W	500		KN-655
690 Duke	690	KT-6907	
690 Duke	690 - 1st Filter	KT-6907	KN-155
690 Enduro R	690	KT-6908	
690 Enduro R	690 - 1st Filter	KT-6908	KN-155
690 SMC	690	KT-6908	
690 SMC	690 - 1st Filter	KT-6908	KN-155
990 Adventure	999	KT-9907	KN-158
990 SM T	999	KT-9907	KN-158
2011 KTM			
125 Duke	125	KT-1211	KN-155
250 EXC-F	250		KN-655
250 EXC-F Six Days	250		KN-655
250 SXF	250		KN-655
250 XCF	250		KN-655
250 XCF-W	250		KN-655
350 SX-F	350		KN-652

Vehicle	Engine Type	Air Filter	Oil Filter
2011 KTM			
400 EXC	400		KN-652
450 EXC	450		KN-652
450 EXC Six Days	450		KN-652
450 SMR	449		KN-652
450 SXF	450		KN-652
450 XC-W	450		KN-652
450 XC-W Six Days	450		KN-652
530 EXC	530		KN-652
530 EXC Six Days	530		KN-652
530 XC-W Six Days	530		KN-652
690 Duke	690	KT-6907	
690 Enduro R	690	KT-6908	
690 Enduro R	690 - 1st Filter	KT-6908	KN-155
690 Enduro R	690 - 2nd Filter	KT-6908	KN-157
690 SMC	690	KT-6908	
690 SMC	690 - 1st Filter	KT-6908	KN-155
690 SMC	690 - 2nd Filter	KT-6908	KN-157
990 Adventure	999	KT-9907	KN-158
990 Adventure Dakar Edition	999		KN-158
990 Adventure R	999		KN-158
990 SM T	999	KT-9907	KN-158
1190 RC8	1190	KT-1108	KN-158
1190 RC8R	1190		KN-158
X-Bow	2.0L L4 F/I	33-2888	
2010 KTM			
250 EXC-F	250		KN-655
250 EXC-F Six Days	250		KN-655
250 SXF	250		KN-655
400 XC-W	400		KN-652
450 EXC	450		KN-652
450 EXC Six Days	450		KN-652
450 SXF	450		KN-652
450 XC-W	450		KN-652
450 XC-W Six Days	450		KN-652
450 XC-WR	450		KN-652
525 XC ATV	525 - 1st Filter		KN-155
525 XC ATV	525 - 2nd Filter		KN-157
530 EXC	530		KN-652
530 EXC Factory Edition	530		KN-652
530 EXC Six Days	530		KN-652
530 XC-W	530		KN-652
530 XC-W Six Days	530		KN-652
690 Duke	690	KT-6907	
690 Duke	690 - 1st Filter	KT-6907	KN-155
690 Duke	690 - 2nd Filter	KT-6907	KN-157
690 Enduro R	690	KT-6908	
690 Enduro R	690 - 1st Filter	KT-6908	KN-155
690 Enduro R	690 - 2nd Filter	KT-6908	KN-157
690 SMC	690	KT-6908	
690 SMC	690 - 1st Filter	KT-6908	KN-155
690 SMC	690 - 2nd Filter	KT-6908	KN-157
990 Adventure	999	KT-9907	KN-158
990 Adventure R	999		KN-158
990 SM T	999	KT-9907	KN-158
990 Supermoto	999	KT-9907	
1190 RC8	1190	KT-1108	KN-158
1190 RC8R	1190		KN-158
X-Bow	2.0L L4 F/I	33-2888	
2009 KTM			
250 EXC-F	250		KN-655
250 SXF	250		KN-655

*Indicates 2 filters required ♦ - Intake kit available - see page 80 Applications updated daily at knfilters.com

Partial Listing - Complete List of Vehicles and Applications at knfilters.com

Vehicle	Engine Type	Air Filter	Oil Filter
2009 KTM			
250 XCF	250		KN-655
250 XCF-W	250		KN-655
400 EXC	400		KN-652
400 XC-W	400		KN-652
450 EXC	450		KN-652
450 SMR	449		KN-652
450 SXF	449		KN-652
450 XC ATV	450 - 1st Filter		KN-155
450 XC ATV	450 - 2nd Filter		KN-157
450 XCF	450		KN-652
450 XC-W	450		KN-652
450 XC-WR	450		KN-652
505 SXF	505		KN-652
505 XCF	478		KN-652
525 XC ATV	525 - 1st Filter		KN-155
525 XC ATV	525 - 2nd Filter		KN-157
530 EXC Six Days	530		KN-652
530 EXC-R	530		KN-652
530 XC-WR	530		KN-652
690 Duke	690	KT-6907	
690 Duke	690 - 1st Filter	KT-6907	KN-155
690 Duke	690 - 2nd Filter	KT-6907	KN-157
690 Enduro	690 - 1st Filter		KN-155
690 Enduro	690 - 2nd Filter		KN-157
690 Enduro R	690	KT-6908	
690 Enduro R	690 - 1st Filter	KT-6908	KN-155
690 Enduro R	690 - 2nd Filter	KT-6908	KN-157
690 SMC	690	KT-6908	
690 SMC	690 - 1st Filter	KT-6908	KN-155
690 SMC	690 - 2nd Filter	KT-6908	KN-157
950 Super Enduro R	950		KN-158
990 Adventure	999	KT-9907	KN-158
1190 RC8	1150	KT-1108	KN-158
X-Bow	2.0L L4 F/I	33-2888	
2008 KTM			
250 EXC-F	250		KN-655
250 SXF	249		KN-655
250 SXS-F	249		KN-655
250 XCF	250		KN-655
250 XCF-W	250		KN-655
400 XC-W	400		KN-652
450 EXC-R	450		KN-652
450 SMR	449		KN-652
450 SXF	449		KN-652
450 SXS-F	449		KN-652
450 XC	450 - 1st Filter		KN-155
450 XC	450 - 2nd Filter		KN-157
450 XC ATV	450 - 1st Filter		KN-155
450 XC ATV	450 - 2nd Filter		KN-157
450 XCF	450		KN-652
450 XC-WR	450		KN-652
505 SXF	505		KN-652
505 XCF	478		KN-652
525 XC ATV	525 - 1st Filter		KN-155
525 XC ATV	525 - 2nd Filter		KN-157
530 EXC-R	530		KN-652
530 XC-WR	530		KN-652
690 Duke	690	KT-6907	
690 Duke	690 - 1st Filter	KT-6907	KN-155
690 Duke	690 - 2nd Filter	KT-6907	KN-157
690 Enduro	690	KT-6908	
690 Enduro	690 - 1st Filter	KT-6908	KN-155
690 Enduro	690 - 2nd Filter	KT-6908	KN-157
2008 KTM			
690 SMC	690	KT-6908	
690 SMC	690 - 1st Filter	KT-6908	KN-155
690 SMC	690 - 2nd Filter	KT-6908	KN-157
690 Supermoto	690	KT-6907	
690 Supermoto	690 - 1st Filter	KT-6907	KN-155
690 Supermoto	690 - 2nd Filter	KT-6907	KN-157
690 Supermoto R	690	KT-6907	
690 Supermoto R	690 - 1st Filter	KT-6907	KN-155
690 Supermoto R	690 - 2nd Filter	KT-6907	KN-157
950 Super Enduro R	950		KN-158
950 Supermoto	950		KN-158
990 Adventure	999	KT-9907	KN-158
990 Super Duke	999	KT-9907	KN-158
990 Super Duke R	999		KN-158
1190 RC8	1150	KT-1108	KN-158
X-Bow	2.0L L4 F/I	33-2888	
2007 KTM			
200 XC-W	200	KT-5201	
250 EXC-F	250		KN-655
250 SXF	250		KN-655
250 SXS-F	250		KN-655
250 XC	250	KT-5201	
250 XCF	250	KT-5201	KN-655
250 XCF-W	250	KT-5201	KN-655
250 XC-W	250	KT-5201	
300 XC-W	300	KT-5201	
400 XC-W	400	KT-5201	
400 XC-W	400 - 1st Filter	KT-5201	KN-155
400 XC-W	400 - 2nd Filter	KT-5201	KN-157
450 EXC	450	KT-5201	
450 EXC	450 - 1st Filter	KT-5201	KN-155
450 EXC	450 - 2nd Filter	KT-5201	KN-157
450 EXC Racing	450	KT-5201	
450 EXC Racing	450 - 1st Filter	KT-5201	KN-155
450 EXC Racing	450 - 2nd Filter	KT-5201	KN-157
450 SXF	449		KN-652
450 XC	450	KT-5201	
450 XC	450 - 1st Filter	KT-5201	KN-155
450 XC	450 - 2nd Filter	KT-5201	KN-157
450 XC-W	450	KT-5201	
450 XC-W	450 - 1st Filter	KT-5201	KN-155
450 XC-W	450 - 2nd Filter	KT-5201	KN-157
505 SXF Preseries	505		KN-652
525 EXC	525	KT-5201	
525 EXC	525 - 1st Filter	KT-5201	KN-155
525 EXC	525 - 2nd Filter	KT-5201	KN-157
525 EXC Racing	525	KT-5201	
525 EXC Racing	525 - 1st Filter	KT-5201	KN-155
525 EXC Racing	525 - 2nd Filter	KT-5201	KN-157
525 XC	525	KT-5201	
525 XC	525 - 1st Filter	KT-5201	KN-155
525 XC	525 - 2nd Filter	KT-5201	KN-157
525 XC Desert Racing	525	KT-5201	
525 XC Desert Racing	525 - 1st Filter	KT-5201	KN-155
525 XC Desert Racing	525 - 2nd Filter	KT-5201	KN-157
525 XC-W	525	KT-5201	
525 XC-W	525 - 1st Filter	KT-5201	KN-155
525 XC-W	525 - 2nd Filter	KT-5201	KN-157
640 Adventure	640 - 1st Filter		KN-155
640 Adventure	640 - 2nd Filter		KN-156
690 Supermoto	690	KT-6907	

*Indicates 2 filters required ♦ - Intake kit available - see page 80 Applications updated daily at knfilters.com

AIR & OIL FILTERS

Vehicle	Engine Type	Air Filter	Oil Filter
2007 KTM			
690 Supermoto R	690 - 1st Filter		KN-655
690 Supermoto R	690 - 2nd Filter		KN-157
950 Super Enduro R	950		KN-158
950 Supermoto	950		KN-158
950 Supermoto R	950		KN-158
990 Adventure	999	KT-9907	KN-158
990 Super Duke	999	KT-9907	KN-158
X-Bow	2.0L L4 F/I	33-2888	
2006 KTM			
250 SX	250	KT-5201	
250 SXF	250	KT-5201	KN-655
250 SXS	250	KT-5201	
250 SXS-F	250	KT-5201	KN-655
300 XC-W	300	KT-5201	
400 EXC Racing	400 - 1st Filter		KN-155
400 EXC Racing	400 - 2nd Filter		KN-157
450 EXC Racing	450 - 1st Filter		KN-155
450 EXC Racing	450 - 2nd Filter		KN-157
450 EXC-G Racing	450	KT-5201	
450 EXC-G Racing	450 - 1st Filter	KT-5201	KN-155
450 EXC-G Racing	450 - 2nd Filter	KT-5201	KN-157
450 SMR	449	KT-5201	
450 SMR	449 - 1st Filter	KT-5201	KN-155
450 SMR	449 - 2nd Filter	KT-5201	KN-157
450 SX	450	KT-5201	
450 SX	450 - 1st Filter	KT-5201	KN-155
450 SX	450 - 2nd Filter	KT-5201	KN-157
450 SX Racing	450 - 1st Filter		KN-155
450 SX Racing	450 - 2nd Filter		KN-157
450 SXS	450	KT-5201	
450 SXS	450 - 1st Filter	KT-5201	KN-155
450 SXS	450 - 2nd Filter	KT-5201	KN-157
450 XC-G Racing	450	KT-5201	
450 XC-G Racing	450 - 1st Filter	KT-5201	KN-155
450 XC-G Racing	450 - 2nd Filter	KT-5201	KN-157
525 EXC Racing	525 - 1st Filter		KN-155
525 EXC Racing	525 - 2nd Filter		KN-157
525 EXC-G Racing	525	KT-5201	
525 EXC-G Racing	525 - 1st Filter	KT-5201	KN-155
525 EXC-G Racing	525 - 2nd Filter	KT-5201	KN-157
525 SX	525	KT-5201	
525 SX	525 - 1st Filter	KT-5201	KN-155
525 SX	525 - 2nd Filter	KT-5201	KN-157
525 SX Racing	525 - 1st Filter		KN-155
525 SX Racing	525 - 2nd Filter		KN-157
525 XC	525 - 1st Filter		KN-155
525 XC	525 - 2nd Filter		KN-157
525 XC-G Racing	525	KT-5201	
525 XC-G Racing	525 - 1st Filter	KT-5201	KN-155
525 XC-G Racing	525 - 2nd Filter	KT-5201	KN-157
525 XC-W	525 - 1st Filter		KN-155
525 XC-W	525 - 2nd Filter		KN-157
560 SMR	560	KT-5201	
560 SMR	560 - 1st Filter	KT-5201	KN-155
560 SMR	560 - 2nd Filter	KT-5201	KN-157
625 SMC	625 - 1st Filter		KN-155
625 SMC	625 - 2nd Filter		KN-156
640 Adventure	640 - 1st Filter		KN-155
640 Adventure	640 - 2nd Filter		KN-156
950 Adventure	950		KN-158
950 Adventure S	950		KN-158
950 Supermoto	950		KN-158

Vehicle	Engine Type	Air Filter	Oil Filter
2005 KTM			
250 SX	250	KT-5201	
250 SXF	249	KT-5201	KN-655
250 SXS	250	KT-5201	
400 EXC Racing	400	KT-5201	
400 EXC Racing	400 - 1st Filter	KT-5201	KN-155
400 EXC Racing	400 - 2nd Filter	KT-5201	KN-157
450 EXC Racing	450	KT-5201	
450 EXC Racing	450 - 1st Filter	KT-5201	KN-155
450 EXC Racing	450 - 2nd Filter	KT-5201	KN-157
450 EXC-G Racing	450	KT-5201	
450 EXC-G Racing	450 - 1st Filter	KT-5201	KN-155
450 EXC-G Racing	450 - 2nd Filter	KT-5201	KN-157
450 MXC Racing	450	KT-5201	
450 MXC Racing	450 - 1st Filter	KT-5201	KN-155
450 MXC Racing	450 - 2nd Filter	KT-5201	KN-157
450 SMR	449	KT-5201	
450 SMR	449 - 1st Filter	KT-5201	KN-155
450 SMR	449 - 2nd Filter	KT-5201	KN-157
450 SX Racing	450	KT-5201	
450 SX Racing	450 - 1st Filter	KT-5201	KN-155
450 SX Racing	450 - 2nd Filter	KT-5201	KN-157
525 EXC Racing	525	KT-5201	
525 EXC Racing	525 - 1st Filter	KT-5201	KN-155
525 EXC Racing	525 - 2nd Filter	KT-5201	KN-157
525 MXC Desert Racing	525	KT-5201	
525 MXC Desert Racing	525 - 1st Filter	KT-5201	KN-155
525 MXC Desert Racing	525 - 2nd Filter	KT-5201	KN-157
525 SX Racing	525	KT-5201	
525 SX Racing	525 - 1st Filter	KT-5201	KN-155
525 SX Racing	525 - 2nd Filter	KT-5201	KN-157
625 SMC	625 - 1st Filter		KN-155
625 SMC	625 - 2nd Filter		KN-156
625 SXC	625 - 1st Filter		KN-155
625 SXC	625 - 2nd Filter		KN-157
640 Adventure	640 - 1st Filter		KN-155
640 Adventure	640 - 2nd Filter		KN-156
640 LC4 Enduro	640 - 1st Filter		KN-155
640 LC4 Enduro	640 - 2nd Filter		KN-156
950 Adventure	950		KN-158
950 Adventure S	950		KN-158
2004 KTM			
125 SX	124	KT-5201	
200 SX	200	KT-5201	
250 EXC Racing	250	KT-5201	
250 EXC Racing	250 - 1st Filter	KT-5201	KN-155
250 EXC Racing	250 - 2nd Filter	KT-5201	KN-157
300 EXC	300	KT-5201	
450 EXC Racing	450	KT-5201	
450 EXC Racing	450 - 1st Filter	KT-5201	KN-155
450 EXC Racing	450 - 2nd Filter	KT-5201	KN-157
450 MXC Racing	450 - 1st Filter		KN-155
450 MXC Racing	450 - 2nd Filter		KN-157
450 SMR	450 - 1st Filter		KN-155
450 SMR	450 - 2nd Filter		KN-157
450 SX Racing	450	KT-5201	
450 SX Racing	450 - 1st Filter	KT-5201	KN-155
450 SX Racing	450 - 2nd Filter	KT-5201	KN-157
525 EXC Racing	525	KT-5201	
525 EXC Racing	525 - 1st Filter	KT-5201	KN-155
525 EXC Racing	525 - 2nd Filter	KT-5201	KN-157
525 SX Racing	525	KT-5201	

*Indicates 2 filters required ♦ - Intake kit available - see page 80 Applications updated daily at knfilters.com

Partial Listing - Complete List of Vehicles and Applications at knfilters.com

Vehicle	Engine Type	Air Filter	Oil Filter
2004 KTM			
525 SX Racing	525 - 1st Filter	KT-5201	KN-155
525 SX Racing	525 - 2nd Filter	KT-5201	KN-157
625 SMC	625 - 1st Filter		KN-155
625 SMC	625 - 2nd Filter		KN-156
625 SXC	625 - 1st Filter		KN-155
625 SXC	625 - 2nd Filter		KN-157
950 Adventure	950		KN-158
950 Adventure S	950		KN-158
2003 KTM			
125 SX	124	KT-5201	
200 MXC	200	KT-5201	
250 EXC Racing	250 - 1st Filter		KN-155
250 EXC Racing	250 - 2nd Filter		KN-157
250 SX	250	KT-5201	
250 SXS	250	KT-5201	
450 EXC Racing	450	KT-5201	
450 EXC Racing	450 - 1st Filter	KT-5201	KN-155
450 EXC Racing	450 - 2nd Filter	KT-5201	KN-157
450 EXC-G Racing	450 - 1st Filter		KN-155
450 EXC-G Racing	450 - 2nd Filter		KN-157
450 SX Racing	450	KT-5201	
450 SX Racing	450 - 1st Filter	KT-5201	KN-155
450 SX Racing	450 - 2nd Filter	KT-5201	KN-157
525 EXC Racing	525	KT-5201	
525 EXC Racing	525 - 1st Filter	KT-5201	KN-155
525 EXC Racing	525 - 2nd Filter	KT-5201	KN-157
525 SX Racing	525	KT-5201	
525 SX Racing	525 - 1st Filter	KT-5201	KN-155
525 SX Racing	525 - 2nd Filter	KT-5201	KN-157
625 SXC	625 - 1st Filter		KN-155
625 SXC	625 - 2nd Filter		KN-157
640 Adventure-R	625 - 1st Filter		KN-155
640 Adventure-R	625 - 2nd Filter		KN-156
640 Duke II	625 - 2nd Filter		KN-156
640 LC4 Enduro	625 - 1st Filter		KN-155
640 LC4 Enduro	625 - 2nd Filter		KN-156
2002 KTM			
380 EXC	368	KT-5201	
400 EXC Racing	400 - 1st Filter		KN-155
400 EXC Racing	400 - 2nd Filter		KN-157
400 EXC-G Racing	400 - 1st Filter		KN-155
400 EXC-G Racing	400 - 2nd Filter		KN-157
520 EXC Racing	510	KT-5201	
520 EXC Racing	510 - 1st Filter	KT-5201	KN-155
520 EXC Racing	510 - 2nd Filter	KT-5201	KN-157
640 Adventure-R	625 - 1st Filter		KN-155
640 Adventure-R	625 - 2nd Filter		KN-156
640 Duke II	625 - 1st Filter		KN-155
640 Duke II	625 - 2nd Filter		KN-156
640 LC4-E	625 - 1st Filter		KN-155
640 LC4-E	625 - 2nd Filter		KN-156
640 LC4-E Supermoto	625 - 1st Filter		KN-155
640 LC4-E Supermoto	625 - 2nd Filter		KN-156
2001 KTM			
400 EXC Racing	400 - 1st Filter		KN-155
400 EXC Racing	400 - 2nd Filter		KN-157
400 LC4-E	400 - 1st Filter		KN-155
400 LC4-E	400 - 2nd Filter		KN-156
400 MXC Racing	400	KT-5201	
400 MXC Racing	400 - 1st Filter	KT-5201	KN-155
400 MXC Racing	400 - 2nd Filter	KT-5201	KN-157
2001 KTM			
520 EXC Racing	510	KT-5201	
520 EXC Racing	510 - 1st Filter	KT-5201	KN-155
520 EXC Racing	510 - 2nd Filter	KT-5201	KN-157
520 MXC Racing	510	KT-5201	
520 MXC Racing	510 - 1st Filter	KT-5201	KN-155
520 MXC Racing	510 - 2nd Filter	KT-5201	KN-157
640 Adventure-R	625 - 1st Filter		KN-155
640 Adventure-R	625 - 2nd Filter		KN-156
640 Duke II	625 - 1st Filter		KN-155
640 Duke II	625 - 2nd Filter		KN-156
640 LC4	625 - 1st Filter		KN-155
640 LC4	625 - 2nd Filter		KN-156
640 LC4 Supermoto	625 - 1st Filter		KN-155
640 LC4 Supermoto	625 - 2nd Filter		KN-156
640 LC4-E	625 - 1st Filter		KN-155
640 LC4-E	625 - 2nd Filter		KN-156
640 LC4-E Supermoto	625 - 1st Filter		KN-155
640 LC4-E Supermoto	625 - 2nd Filter		KN-156
2000 KTM			
400 EXC Racing	400	KT-5201	
400 EXC Racing	400 - 1st Filter	KT-5201	KN-155
400 EXC Racing	400 - 2nd Filter	KT-5201	KN-157
640 Duke II	625 - 1st Filter		KN-155
640 Duke II	625 - 2nd Filter		KN-156
640 LC4	625 - 1st Filter		KN-155
640 LC4	625 - 2nd Filter		KN-156
640 LC4-E	625 - 1st Filter		KN-155
640 LC4-E	625 - 2nd Filter		KN-156
640 LC4-E Six Days	625 - 1st Filter		KN-155
640 LC4-E Six Days	625 - 2nd Filter		KN-156
640 LC4-E Supermoto	625 - 1st Filter		KN-155
640 LC4-E Supermoto	625 - 2nd Filter		KN-156
1999 KTM			
640 Adventure-R	625 - 1st Filter		KN-155
640 Adventure-R	625 - 2nd Filter		KN-156
640 LC4	625 - 1st Filter		KN-155
640 LC4	625 - 2nd Filter		KN-156
640 LC4 Six Days	625 - 1st Filter		KN-155
640 LC4 Six Days	625 - 2nd Filter		KN-156
640 LC4 Supermoto	625 - 1st Filter		KN-155
640 LC4 Supermoto	625 - 2nd Filter		KN-156
1998 KTM			
400 LC4	400 - 1st Filter		KN-155
400 LC4	400 - 2nd Filter		KN-156
620 LC4 Competition	620 - 1st Filter		KN-155
620 LC4 Competition	620 - 2nd Filter		KN-156
640 Adventure-R	625 - 1st Filter		KN-155
640 Adventure-R	625 - 2nd Filter		KN-156
640 LC4	625 - 1st Filter		KN-155
640 LC4	625 - 2nd Filter		KN-156
1997 KTM			
620 Duke	609 - 2nd Filter		KN-156
620 EGS-E	620 - 2nd Filter		KN-156
640 LC4 Rallye Dakar	640 - 2nd Filter		KN-156
1996 KTM			
620 EGS	620 - 2nd Filter		KN-156
1994 KTM			
400 EGS	400 - 2nd Filter		KN-156

*Indicates 2 filters required ♦ - Intake kit available - see page 80 Applications updated daily at knfilters.com

AIR & OIL FILTERS

Vehicle	Engine Type	Air Filter	Oil Filter
1994 KTM			
620 Duke	609 - 2nd Filter		KN-156
2006 KUBOTA			
BX1500	594	E-4552	
BX2200	892	E-4552	
2005 KUBOTA			
BX1500	594	E-4552	
2004 KUBOTA			
BX1500	594	E-4552	
2003 KUBOTA			
BX2200	892	E-4552	
2002 KUBOTA			
BX2200	892	E-4552	
2001 KUBOTA			
BX2200	892	E-4552	
G2460 Gasoline	741	E-4552	
2000 KUBOTA			
BX2200	892	E-4552	
2012 KYMCO			
MXU375	375		KN-138
			KN-138C
MXU400	400		KN-138
			KN-138C
MXU450	450		KN-138
			KN-138C
MXU500	500		KN-147
MXU550	550		KN-147
MyRoad	700		KN-147
Xciting 500Ri	500		KN-147
2011 KYMCO			
MXU375	375		KN-138
			KN-138C
MXU500	500		KN-147
Xciting 500Ri	500		KN-147
2010 KYMCO			
MXU375	375		KN-138
			KN-138C
MXU400	400		KN-138
			KN-138C
MXU500	500		KN-147
UXV 500 4x4	500		KN-147
Xciting 500Ri	500		KN-147
2009 KYMCO			
MXU500	500		KN-147
UXV 500 4x4	500		KN-147
UXV 500 4x4 Camo	500		KN-147
Xciting 500	500		KN-147
Xciting 500Ri	500		KN-147
2008 KYMCO			
Mongoose 300	300	KY-2504	
MXU500	500		KN-147
Xciting 500	500		KN-147
Xciting 500 Ri	500		KN-147
2013 LAMBORGHINI			
Gallardo	5.2L V10 F/I	E-0669	
2012 LAMBORGHINI			
Gallardo	5.2L V10 F/I	E-0669	

Vehicle	Engine Type	Air Filter	Oil Filter
2011 LAMBORGHINI			
Gallardo	5.2L V10 F/I	E-0669	
2010 LAMBORGHINI			
Gallardo	5.2L V10 F/I	E-0669	
Murcielago	6.5L V12 F/I	33-2574	
2009 LAMBORGHINI			
Gallardo	5.2L V10 F/I	E-0669	
Murcielago	6.5L V12 F/I	33-2574	
2008 LAMBORGHINI			
Murcielago	6.5L V12 F/I	33-2574	
2007 LAMBORGHINI			
Murcielago	6.5L V12 F/I	33-2574*	
2006 LAMBORGHINI			
Murcielago	6.5L V12 F/I	33-2574	
2005 LAMBORGHINI			
Murcielago	6.2L V12 F/I	33-2574	
2004 LAMBORGHINI			
Murcielago	6.2L V12 F/I	33-2574	
2003 LAMBORGHINI			
Murcielago	6.2L V12 F/I	33-2574	
2002 LAMBORGHINI			
Murcielago	6.2L V12 F/I	33-2574	
2001 LAMBORGHINI			
Diablo	6.0L V12 F/I	33-2574	
2000 LAMBORGHINI			
Diablo	5.7L V12 F/I	33-2574	
Diablo	6.0L V12 F/I	33-2574	
1999 LAMBORGHINI			
Diablo	5.7L V12 F/I	33-2574	
1995 LAMBORGHINI			
Diablo	5.7L V12 F/I	33-2574	
1992 LAMBORGHINI			
Diablo	5.7L V12 F/I	33-2574	
1988 LAMBORGHINI			
Countach	5.2L V12 F/I	33-2574	
1980 LAMBORGHINI			
Countach	3.9L V12 CARB - w/Round Filter	E-2950	
1975 LAMBORGHINI			
Countach	240 V12 CARB - w/Panel Filter	33-2574	
Countach	240 V12 CARB - w/Round Filter	E-2950	
1973 LAMBORGHINI			
Espada	243 V12 CARB	E-2950	
1971 LAMBORGHINI			
Jarama	243 V12 CARB	E-2950	
1970 LAMBORGHINI			
Miura	243 V12 CARB	E-2950	
1969 LAMBORGHINI			
Miura	243 V12 CARB	E-2950	
1968 LAMBORGHINI			
Miura	243 V12 CARB	E-2950	

*Indicates 2 filters required ♦ - Intake kit available - see page 80 Applications updated daily at knfilters.com

Partial Listing - Complete List of Vehicles and Applications at knfilters.com

Vehicle	Engine Type	Air Filter	Oil Filter
2012 LANCIA			
Delta III	1.4L L4 F/I	E-2995	
2005 LANCIA			
Lybra	1.8L L4 F/I	E-2012	
1995 LANCIA			
Y10	1.3L L4 F/I	33-2629	
1992 LANCIA			
Delta I	2.0L L4 F/I	33-2096 ♦	
1990 LANCIA			
Dedra	1.6L L4 F/I	33-2586	
1984 LANCIA			
Beta	2.0L L4 F/I	33-2502	
1982 LANCIA			
Beta	2.0L L4 F/I	33-2502	
1981 LANCIA			
Beta	2.0L L4 F/I - w/Panel Filter	33-2502	
2013 LAND ROVER			
Defender	2.2L L4 DSL	33-2992	
LR4	5.0L V8 F/I	33-2446	
Range Rover	5.0L V8 F/I	33-2446	
Range Rover Evoque	2.0L L4 F/I	33-2991	HP-1002
Range Rover Evoque	2.2L L4 DSL	33-2991	
Range Rover IV	5.0L V8 F/I	33-2446	
Range Rover Sport	5.0L V8 F/I	33-2446	
2012 LAND ROVER			
Defender	2.4L L4 DSL	33-2992	
Freelander	2.2L L4 DSL	33-2414	
LR4	5.0L V8 F/I	33-2446	
Range Rover	5.0L V8 F/I	33-2446	
Range Rover Evoque	2.0L L4 F/I	33-2991	HP-1002
Range Rover Evoque	2.2L L4 DSL	33-2991	
Range Rover III	4.4L V8 DSL	33-2446	
Range Rover III	5.0L V8 F/I	33-2446	
Range Rover IV	4.4L V8 DSL	33-2446	
Range Rover IV	5.0L V8 F/I	33-2446	
Range Rover Sport	3.0L V6 DSL	33-2333	
Range Rover Sport	5.0L V8 F/I	33-2446	
2011 LAND ROVER			
Defender	2.4L L4 DSL	33-2992	
LR4	5.0L V8 F/I	33-2446	
Range Rover	5.0L V8 F/I	33-2446	
Range Rover Evoque	2.0L L4 F/I	33-2991	
Range Rover III	4.4L V8 DSL	33-2446	
Range Rover III	5.0L V8 F/I	33-2446	
Range Rover Sport	3.0L V6 DSL	33-2333	
Range Rover Sport	5.0L V8 F/I	33-2446	
2010 LAND ROVER			
LR4	5.0L V8 F/I	33-2446	
Range Rover	5.0L V8 F/I	33-2446	
Range Rover III	4.4L V8 DSL	33-2446	
Range Rover III	5.0L V8 F/I	33-2446	
Range Rover Sport	3.0L V6 DSL	33-2333	
Range Rover Sport	3.6L V8 DSL	33-2333	
Range Rover Sport	5.0L V8 F/I	33-2446	
2009 LAND ROVER			
Defender	2.4L L4 DSL	33-2992	
LR3	4.4L V8 F/I	33-2333	HP-1014
Range Rover	4.2L V8 F/I	33-2857	HP-1014
2009 LAND ROVER			
Range Rover	4.4L V8 F/I	33-2857	HP-1014
Range Rover III	5.0L V8 F/I	33-2446	
Range Rover Sport	3.0L V6 DSL	33-2333	
Range Rover Sport	3.6L V8 DSL	33-2333	
Range Rover Sport	4.2L V8 F/I	33-2333	HP-1014
Range Rover Sport	4.4L V8 F/I	33-2333	HP-1014
2008 LAND ROVER			
Defender	2.4L L4 DSL	33-2992	
Discovery III	4.4L V8 F/I	33-2333	
LR3	4.0L V6 F/I	33-2333	HP-2010
LR3	4.4L V8 F/I	33-2333	HP-1014
Range Rover	4.2L V8 F/I	33-2857	HP-1014
Range Rover	4.4L V8 F/I	33-2857	HP-1014
Range Rover III	4.2L V8 F/I		HP-1014
Range Rover III	4.4L V8 F/I		HP-1014
Range Rover Sport	2.7L V6 DSL	33-2333	
Range Rover Sport	3.6L V8 DSL	33-2333	
Range Rover Sport	4.2L V8 F/I	33-2333	HP-1014
Range Rover Sport	4.4L V8 F/I	33-2333	HP-1014
2007 LAND ROVER			
Defender	2.4L L4 DSL	33-2992	
LR3	4.0L V6 F/I	33-2333	HP-2010
LR3	4.4L V8 F/I	33-2333	HP-1014
Range Rover	4.2L V8 F/I	33-2857	HP-1014
Range Rover	4.4L V8 F/I	33-2857	HP-1014
Range Rover III	4.2L V8 F/I		HP-1014
Range Rover III	4.4L V8 F/I		HP-1014
Range Rover Sport	2.7L V6 DSL	33-2333	
Range Rover Sport	3.6L V8 DSL	33-2333	
Range Rover Sport	4.2L V8 F/I	33-2333	HP-1014
Range Rover Sport	4.4L V8 F/I	33-2333	HP-1014
2006 LAND ROVER			
LR3	4.0L V6 F/I	33-2333	HP-2010
LR3	4.4L V8 F/I	33-2333	HP-1014
Range Rover	4.2L V8 F/I	33-2857	HP-1014
Range Rover	4.4L V8 F/I	33-2857	HP-1014
Range Rover III	4.2L V8 F/I		HP-1014
Range Rover III	4.4L V8 F/I		HP-1014
Range Rover Sport	2.7L V6 DSL	33-2333	
Range Rover Sport	3.6L V8 DSL	33-2333	
Range Rover Sport	4.2L V8 F/I	33-2333	HP-1014
Range Rover Sport	4.4L V8 F/I	33-2333	HP-1014
2005 LAND ROVER			
Freelander	2.0L L4 DSL	E-2653	
Freelander	2.5L V6 F/I	33-2265	
LR3	4.0L V6 F/I		HP-2010
LR3	4.4L V8 F/I	33-2333	HP-1014
Range Rover	4.4L V8 F/I	E-9269	HP-7006
Range Rover III	4.4L V8 F/I		HP-7006
Range Rover III	4.4L V8 F/I - from 6/05	33-2333	HP-7006
Range Rover III	4.4L V8 F/I - to 5/05	E-9269	HP-7006
Range Rover Sport	4.2L V8 F/I	33-2333	
Range Rover Sport	4.4L V8 F/I	33-2333	HP-1014
2004 LAND ROVER			
Discovery	4.0L V8 F/I	33-2119	
Discovery	4.6L V8 F/I	33-2119	HP-2004
Discovery II	4.0L V8 F/I	33-2788	
Discovery II	4.6L V8 F/I	33-2119	HP-2004
Discovery III	2.7L V6 DSL	33-2333 ♦	
Discovery III	4.4L V8 F/I	33-2333	
Freelander	2.0L L4 DSL	E-2653	

*Indicates 2 filters required ♦ - Intake kit available - see page 80 Applications updated daily at knfilters.com

Vehicle	Engine Type	Air Filter	Oil Filter
2004 LAND ROVER			
Freelander	2.5L V6 F/I	33-2265	
Range Rover	4.4L V8 F/I	E-9269	HP-7006
Range Rover III	3.0L L6 DSL	E-2657	
Range Rover III	4.4L V8 F/I	E-9269	HP-7006
2003 LAND ROVER			
Defender	2.5L L5 DSL - 122BHP	33-2788	
Discovery	4.0L V8 F/I	33-2119	
Discovery	4.6L V8 F/I	33-2119	HP-2004
Discovery II	4.0L V8 F/I	33-2788	
Discovery II	4.6L V8 F/I	33-2119	HP-2004
Freelander	2.5L V6 F/I	33-2265	
Range Rover	4.4L V8 F/I		HP-7006
Range Rover	4.4L V8 F/I - 286BHP	E-9269	HP-7006
Range Rover III	3.0L L6 DSL	E-2657	
Range Rover III	4.4L V8 F/I	E-9269	HP-7006
2002 LAND ROVER			
Discovery	4.0L V8 F/I	33-2119	HP-2004
Discovery II	4.0L V8 F/I	33-2788	HP-2004
Discovery II	4.6L V8 F/I	33-2119	
Freelander	2.0L L4 DSL	E-2653	
Freelander	2.5L V6 F/I	33-2265	
Range Rover	4.6L V8 F/I	33-2119	HP-2004
Range Rover II	4.6L V8 F/I	33-2788	HP-2004
2001 LAND ROVER			
Defender	2.5L L5 DSL - 122BHP	33-2788	
Discovery	4.0L V8 F/I	33-2119	HP-2004
Discovery II	4.0L V8 F/I	33-2788	HP-2004
Range Rover	4.0L V8 F/I	33-2119	
Range Rover	4.6L V8 F/I	33-2119	HP-2004
Range Rover II	4.6L V8 F/I	33-2788	HP-2004
2000 LAND ROVER			
Discovery	4.0L V8 F/I	33-2119	HP-2004
Discovery II	4.0L V8 F/I	33-2788	HP-2004
Range Rover	4.0L V8 F/I	33-2119	HP-2004
Range Rover	4.6L V8 F/I	33-2119	HP-2004
Range Rover II	4.0L V8 F/I	33-2788	HP-2004
Range Rover II	4.6L V8 F/I	33-2788	HP-2004
1999 LAND ROVER			
Discovery	4.0L V8 F/I	33-2119	HP-2004
Discovery	4.0L V8 F/I - Petrol	33-2788	HP-2004
Discovery II	4.0L V8 F/I	33-2788	HP-2004
Discovery SD	4.0L V8 F/I	33-2737	HP-2004
Range Rover	4.0L V8 F/I	33-2119	HP-2004
Range Rover	4.6L V8 F/I	33-2119	HP-2004
Range Rover II	4.0L V8 F/I	33-2788	HP-2004
Range Rover II	4.6L V8 F/I	33-2788	HP-2004
1998 LAND ROVER			
Discovery	4.0L V8 F/I	33-2737	HP-2004
Discovery II	3.9L V8 F/I	33-2737	
Discovery II	4.0L V8 F/I	33-2737	HP-2004
Range Rover	4.0L V8 F/I	33-2119	HP-2004
Range Rover	4.6L V8 F/I	33-2119	HP-2004
Range Rover II	4.0L V8 F/I	33-2788	HP-2004
Range Rover II	4.6L V8 F/I	33-2788 ♦	HP-2004
1997 LAND ROVER			
Defender 90	4.0L V8 F/I	E-2350	HP-2004
Discovery	4.0L V8 F/I	33-2737	HP-2004
Discovery II	3.9L V8 F/I	33-2737	
Range Rover	4.0L V8 F/I	33-2119	HP-2004
Range Rover	4.6L V8 F/I	33-2119	HP-2004
1997 LAND ROVER			
Range Rover II	4.6L V8 F/I	33-2788 ♦	HP-2004
1996 LAND ROVER			
Discovery	4.0L V8 F/I	33-2737	HP-2004
Discovery II	3.9L V8 F/I	33-2737	
Range Rover	4.0L V8 F/I		HP-2004
Range Rover	4.0L V8 F/I - from 9/96	33-2788	HP-2004
Range Rover	4.0L V8 F/I - to 8/96	33-2744	HP-2004
Range Rover	4.6L V8 F/I		HP-2004
Range Rover II	4.6L V8 F/I		HP-2004
Range Rover II	4.6L V8 F/I - from 9/96	33-2788 ♦	HP-2004
Range Rover II	4.6L V8 F/I - to 8/96	33-2744 ♦	HP-2004
1995 LAND ROVER			
Defender	2.5L L4 DSL	E-2590	
Defender 90	3.9L V8 F/I	E-2350	HP-2004
Discovery	3.9L V8 F/I	33-2737	HP-2004
Discovery II	3.9L V8 F/I	33-2737	HP-2004
Range Rover	3.9L V8 F/I	33-2737	HP-2004
Range Rover	4.0L V8 F/I	33-2744	HP-2004
Range Rover	4.2L V8 F/I	33-2737	HP-2004
Range Rover	4.2L V8 F/I - Non-US, Petrol	33-2744	HP-2004
Range Rover II	3.9L V8 F/I	33-2744	HP-2004
1994 LAND ROVER			
Defender	2.5L L4 DSL	E-2590	
Defender 90	3.9L V8 F/I	E-2350	HP-2004
Discovery	3.9L V8 F/I	33-2737	HP-2004
Discovery I	3.9L V8 F/I	33-2737	HP-2004
Discovery II	3.9L V8 F/I	33-2737	HP-2004
Range Rover	3.9L V8 F/I	E-2350	HP-2004
Range Rover	4.2L V8 F/I	33-2744	HP-2004
Range Rover I	2.5L L6 DSL	E-2590	
Range Rover I	3.9L V8 F/I		HP-2004
Range Rover I	3.9L V8 F/I - w/Panel Filter	33-2737 ♦	HP-2004
Range Rover I	3.9L V8 F/I - w/Round Filter	E-2350 ♦	HP-2004
Range Rover II	3.9L V8 F/I	33-2744	HP-2004
Range Rover II	4.6L V8 F/I	33-2744 ♦	
1993 LAND ROVER			
Defender 110	3.9L V8 F/I	E-2350	HP-2004
Discovery I	2.5L L4 DSL - Exc., Off Road	E-2590 ♦	
Discovery I	3.9L V8 F/I	33-2737	
Range Rover	4.2L V8 F/I	33-2744	HP-2004
1992 LAND ROVER			
Defender	2.5L L4 DSL	E-2590	
Range Rover	3.9L V8 F/I	E-2350 ♦	HP-3001
Range Rover I	3.9L V8 F/I	E-2350 ♦	HP-3001
1991 LAND ROVER			
Defender	2.5L L4 DSL	E-2590	
Range Rover	3.9L V8 F/I	E-2350 ♦	HP-3001
Range Rover I	3.9L V8 F/I	E-2350 ♦	HP-3001
1990 LAND ROVER			
90 / 110	2.5L L4 DSL	38-9051	
90 / 110	2.5L L4 F/I	38-9051	
Defender	2.5L L4 DSL	E-2590	
Range Rover	3.9L V8 F/I	E-2350 ♦	HP-3001
Range Rover I	3.9L V8 F/I	E-2350 ♦	HP-3001
1989 LAND ROVER			
Range Rover	3.9L V8 F/I		HP-3001
Range Rover I	2.5L L4 DSL	E-2590	

*Indicates 2 filters required ♦ - Intake kit available - see page 80 Applications updated daily at knfilters.com

Vehicle	Engine Type	Air Filter	Oil Filter
1989 LAND ROVER			
Range Rover I	3.9L V8 F/I	E-2350 ♦	HP-3001
1988 LAND ROVER			
Range Rover	3.5L V8 F/I	E-2350 ♦	HP-3001
Range Rover I	3.5L V8 CARB	E-9098*	
Range Rover I	3.5L V8 F/I	E-2350 ♦	HP-3001
1987 LAND ROVER			
Range Rover I	3.5L V8 F/I	E-2350 ♦	HP-3001
1985 LAND ROVER			
90 / 110	2.5L L4 F/I	38-9051	
90 / 110	3.5L V8 CARB	E-9080	
1984 LAND ROVER			
90 / 110	3.5L V8 CARB	E-9080	
1983 LAND ROVER			
90 / 110	3.5L V8 CARB	E-9080	
1981 LAND ROVER			
88 / 109 Series	3.5L V8 CARB	E-2590	
2013 LEXUS			
ES300h	2.5L L4 F/I	33-2381	
ES350	3.5L V6 F/I	33-2443	
GS350	3.5L V6 F/I	33-2452	
GS450h	3.5L V6 F/I	33-2452	
GX460	4.6L V8 F/I	33-2438	
IS F	5.0L V8 F/I	33-2453	
IS250	2.5L V6 F/I	33-2345	
IS350	3.5L V6 F/I	33-2345	
RX350	3.5L V6 F/I	33-2443	
RX450h	3.5L V6 F/I	33-2455	
2012 LEXUS			
CT200h	1.8L L4 F/I	33-2435	HP-7021
ES350	3.5L V6 F/I	33-2326	HP-7020
GX460	4.6L V8 F/I	33-2438	
HS250h	2.4L L4 F/I	33-2381	HP-1003
IS250	2.5L V6 F/I	33-2345 ♦	
IS350	3.5L V6 F/I	33-2345	
LS460	4.6L V8 F/I	33-2381*	
LS600h	5.0L V8 F/I	33-2381*	
RX350	3.5L V6 F/I	33-2443	HP-7020
RX450h	3.5L V6 F/I	33-2455	HP-7020
2011 LEXUS			
CT200h	1.8L L4 F/I	33-2435	
ES350	3.5L V6 F/I	33-2326	HP-7020
GS350	3.5L V6 F/I	33-2345 ♦	
GS450h	3.5L V6 F/I	33-2220	
GS460	4.6L V8 F/I	33-2452	
GX460	4.6L V8 F/I	33-2438	
HS250h	2.4L L4 F/I	33-2381	HP-1003
IS220	2.2L L4 DSL	33-2345	
IS250	2.5L V6 F/I	33-2345 ♦	
IS350	3.5L V6 F/I	33-2345 ♦	
LS460	4.6L V8 F/I	33-2381*	
RX350	3.5L V6 F/I	33-2443	HP-7020
RX450h	3.5L V6 F/I	33-2455	HP-7020
2010 LEXUS			
ES350	3.5L V6 F/I	33-2326	HP-7020
GS350	3.5L V6 F/I	33-2345 ♦	
GS450h	3.5L V6 F/I	33-2220	
GS460	4.6L V8 F/I	33-2452	
GX460	4.6L V8 F/I	33-2438	
HS250h	2.4L L4 F/I	33-2381	HP-1003
2010 LEXUS			
IS220	2.2L L4 DSL	33-2345	
IS250	2.5L V6 F/I	33-2345 ♦	
IS350	3.5L V6 F/I	33-2345 ♦	
LS460	4.6L V8 F/I	33-2381*	
RX350	3.5L V6 F/I	33-2443	HP-7020
RX450h	3.5L V6 F/I	33-2455	HP-7020
SC430	4.3L V8 F/I	33-2220	HP-1002
2009 LEXUS			
ES350	3.5L V6 F/I	33-2326	HP-7020
GS350	3.5L V6 F/I	33-2345 ♦	
GS450h	3.5L V6 F/I	33-2220	
GS460	4.6L V8 F/I	33-2452	
GX470	4.7L V8 F/I	33-2144	HP-1002
IS220	2.2L L4 DSL	33-2345	
IS250	2.5L V6 F/I	33-2345 ♦	
IS350	3.5L V6 F/I	33-2345 ♦	
LS460	4.6L V8 F/I	33-2381*	
RX350	3.5L V6 F/I	33-2260	HP-7020
RX400h	3.3L V6 F/I	33-2344	HP-1002
SC430	4.3L V8 F/I	33-2220	HP-1002
2008 LEXUS			
ES350	3.5L V6 F/I	33-2326	HP-7020
GS350	3.5L V6 F/I	33-2345 ♦	
GS450h	3.5L V6 F/I	33-2220	
GS460	4.6L V8 F/I	33-2452	
GX470	4.7L V8 F/I	33-2144	HP-1002
IS220	2.2L L4 DSL	33-2345	
IS250	2.5L V6 F/I	33-2345 ♦	
IS350	3.5L V6 F/I	33-2345 ♦	
LS460	4.6L V8 F/I	33-2381*	
LS600h	5.0L V8 F/I	33-2381*	
LX470	4.7L V8 F/I	33-2146	
RX350	3.5L V6 F/I	33-2260	HP-7020
RX400h	3.3L V6 F/I	33-2344	HP-1002
SC430	4.3L V8 F/I	33-2220	HP-1002
2007 LEXUS			
ES350	3.5L V6 F/I	33-2326	HP-7020
GS350	3.5L V6 F/I	33-2345 ♦	
GS430	4.3L V8 F/I	33-2345	HP-1002
GS450h	3.5L V6 F/I	33-2220	
GX470	4.7L V8 F/I	33-2144	HP-1002
IS220	2.2L L4 DSL	33-2345	
IS250	2.5L V6 F/I	33-2345 ♦	
IS350	3.5L V6 F/I	33-2345 ♦	
LS460	4.6L V8 F/I	33-2381*	
LX470	4.7L V8 F/I	33-2146	HP-1002
RX350	3.5L V6 F/I	33-2260	HP-7020
RX400h	3.3L V6 F/I	33-2344	HP-1002
SC430	4.3L V8 F/I	33-2220	HP-1002
2006 LEXUS			
ES330	3.3L V6 F/I	33-2260	HP-1002
GS300	3.0L V6 F/I	33-2220	
GS430	4.3L V8 F/I	33-2345	HP-1002
GX470	4.7L V8 F/I	33-2144	HP-1002
IS220	2.2L L4 DSL	33-2345	
IS250	2.5L V6 F/I	33-2345 ♦	
IS350	3.5L V6 F/I	33-2345 ♦	
LS430	4.3L V8 F/I	33-2137	HP-1002
LX470	4.7L V8 F/I	33-2146	HP-1002
RX330	3.3L V6 F/I	33-2260	HP-1002
RX400h	3.3L V6 F/I	33-2344	HP-1002
SC430	4.3L V8 F/I	33-2220	HP-1002

*Indicates 2 filters required ♦ - Intake kit available - see page 80 Applications updated daily at knfilters.com

AIR & OIL FILTERS

Vehicle	Engine Type	Air Filter	Oil Filter
2005 LEXUS			
ES330	3.3L V6 F/I	33-2260	HP-1002
GS300	3.0L L6 F/I	33-2170	HP-1002
GS430	4.3L V8 F/I	33-2220	HP-1002
GX470	4.7L V8 F/I	33-2144	HP-1002
IS250	2.5L V6 F/I	33-2345 ♦	
IS300	3.0L L6 F/I	33-2170 ♦	HP-1002
LS430	4.3L V8 F/I	33-2137	HP-1002
LX470	4.7L V8 F/I	33-2146	HP-1002
RX330	3.3L V6 F/I	33-2260	HP-1002
SC430	4.3L V8 F/I	33-2220	HP-1002
2004 LEXUS			
ES330	3.3L V6 F/I	33-2260	HP-1002
GS300	3.0L L6 F/I	33-2170	HP-1002
GS430	4.3L V8 F/I	33-2220	HP-1002
GX470	4.7L V8 F/I	33-2144	HP-1002
IS200	2.0L L6 F/I - 153BHP	33-2845	
IS300	3.0L L6 F/I	33-2170 ♦	HP-1002
LS430	4.3L V8 F/I	33-2137	HP-1002
LX470	4.7L V8 F/I	33-2146	HP-1002
RX330	3.3L V6 F/I	33-2260	HP-1002
SC430	4.3L V8 F/I	33-2220	HP-1002
2003 LEXUS			
ES300	3.0L V6 F/I	33-2260	HP-1002
GS300	3.0L L6 F/I	33-2170	HP-1002
GS430	4.3L V8 F/I	33-2220	HP-1002
GX470	4.7L V8 F/I	33-2144	HP-1002
IS200	2.0L L6 F/I - 153BHP	33-2845	
IS300	3.0L L6 F/I	33-2170 ♦	HP-1002
LS430	4.3L V8 F/I	33-2137	HP-1002
LX470	4.7L V8 F/I	33-2146	HP-1002
RX300	3.0L V6 F/I	33-2145-1	HP-1002
RX330	3.3L V6 F/I	33-2260	HP-1002
SC430	4.3L V8 F/I	33-2220	HP-1002
2002 LEXUS			
ES300	3.0L V6 F/I	33-2260	HP-1002
GS300	3.0L L6 F/I	33-2170	HP-1002
GS430	4.3L V8 F/I	33-2220	HP-1002
GX470	4.7L V8 F/I	33-2144	
IS200	2.0L L6 F/I - 153BHP	33-2845	
IS300	3.0L L6 F/I	33-2170 ♦	HP-1002
LS430	4.3L V8 F/I	33-2137	HP-1002
LX470	4.7L V8 F/I	33-2146	HP-1002
RX300	3.0L V6 F/I	33-2145-1	HP-1002
SC430	4.3L V8 F/I	33-2220	HP-1002
2001 LEXUS			
ES300	3.0L V6 F/I	33-2145-1	HP-1002
GS300	3.0L L6 F/I	33-2170	HP-1002
GS430	4.3L V8 F/I	33-2220	HP-1002
IS200	2.0L L6 F/I - 153BHP	33-2845	
IS300	3.0L L6 F/I	33-2170 ♦	HP-1002
LS430	4.3L V8 F/I	33-2137	HP-1002
LX470	4.7L V8 F/I	33-2146	HP-1002
RX300	3.0L V6 F/I	33-2145-1	HP-1002
SC430	4.3L V8 F/I	33-2220	
2000 LEXUS			
ES300	3.0L V6 F/I	33-2145-1	HP-1002
GS300	3.0L L6 F/I	33-2170	HP-1002
GS400	4.0L V8 F/I	33-2137 ♦	HP-1002
IS200	2.0L L6 F/I - 153BHP	33-2845	
IS300	3.0L L6 F/I	33-2170	
LS400	4.0L V8 F/I	E-2606	HP-1002

Vehicle	Engine Type	Air Filter	Oil Filter
2000 LEXUS			
LS430	4.3L V8 F/I	33-2137	HP-1002
LX470	4.7L V8 F/I	33-2146	HP-1002
RX300	3.0L V6 F/I	33-2145-1	HP-1002
SC300	3.0L L6 F/I		HP-1002
SC400	4.0L V8 F/I		HP-1002
1999 LEXUS			
ES300	3.0L V6 F/I	33-2145-1	HP-1002
GS300	3.0L L6 F/I	33-2170	HP-1002
GS400	4.0L V8 F/I	33-2137 ♦	HP-1002
IS200	2.0L L6 F/I - 153BHP	33-2845	
LS400	4.0L V8 F/I	E-2606	HP-1002
LX470	4.7L V8 F/I	33-2146	HP-1002
RX300	3.0L V6 F/I	33-2145-1	HP-1002
SC300	3.0L L6 F/I		HP-1002
SC400	4.0L V8 F/I		HP-1002
1998 LEXUS			
ES300	3.0L V6 F/I	33-2145-1	HP-1002
GS300	3.0L L6 F/I	33-2170	HP-1002
GS400	4.0L V8 F/I	33-2137 ♦	HP-1002
LS400	4.0L V8 F/I	E-2606	HP-1002
LX470	4.7L V8 F/I	33-2146	HP-1002
SC300	3.0L L6 F/I		HP-1002
SC400	4.0L V8 F/I		HP-1002
1997 LEXUS			
ES300	3.0L V6 F/I	33-2145-1	HP-1002
GS300	3.0L L6 F/I	33-2053	HP-1002
LS400	4.0L V8 F/I	E-2606	HP-1002
LX450	4.5L L6 F/I	E-2443	HP-1002
SC300	3.0L L6 F/I	33-2054	HP-1002
SC400	4.0L V8 F/I	33-2054	HP-1002
1996 LEXUS			
ES300	3.0L V6 F/I	33-2052	HP-1002
GS300	3.0L L6 F/I	33-2053	HP-1002
LS400	4.0L V8 F/I	E-2606	HP-1002
LX450	4.5L L6 F/I	E-2443	HP-1002
SC300	3.0L L6 F/I	33-2054	HP-1002
SC400	4.0L V8 F/I	33-2054	HP-1002
1995 LEXUS			
ES300	3.0L V6 F/I	33-2052	HP-1002
GS300	3.0L L6 F/I	33-2053	HP-1002
LS400	4.0L V8 F/I	E-2606	HP-1002
SC300	3.0L L6 F/I	33-2054	HP-1002
SC400	4.0L V8 F/I	33-2054	HP-1002
1994 LEXUS			
ES300	3.0L V6 F/I	33-2052	HP-1002
GS300	3.0L L6 F/I	33-2053	HP-1002
LS400	4.0L V8 F/I	E-2606	HP-1002
SC300	3.0L L6 F/I	33-2054	HP-1002
SC400	4.0L V8 F/I	33-2054	HP-1002
1993 LEXUS			
ES300	3.0L V6 F/I	33-2052	HP-1002
GS300	3.0L L6 F/I	33-2053	HP-1002
LS400	4.0L V8 F/I	E-2606	HP-1002
SC300	3.0L L6 F/I	33-2054	HP-1002
SC400	4.0L V8 F/I	33-2054	HP-1002
1992 LEXUS			
ES300	3.0L V6 F/I		HP-1002
LS400	4.0L V8 F/I	E-2606	HP-1002
SC300	3.0L L6 F/I	33-2054	HP-1002
SC400	4.0L V8 F/I	33-2054	HP-1002

*Indicates 2 filters required ♦ - Intake kit available - see page 80 Applications updated daily at knfilters.com

Partial Listing - Complete List of Vehicles and Applications at knfilters.com

Vehicle	Engine Type	Air Filter	Oil Filter
1991 LEXUS			
ES250	2.5L V6 F/I	33-2030	HP-1002
LS400	4.0L V8 F/I	E-2606	HP-1002
1990 LEXUS			
LS400	4.0L V8 F/I	E-2606	HP-1002
2013 LINCOLN			
MKS	3.5L V6 F/I	33-2395	HP-2011
MKS	3.7L V6 F/I	33-2395	HP-2011
MKT	3.5L V6 F/I	33-2395	HP-2011
MKT	3.7L V6 F/I	33-2395	HP-2011
MKX	3.7L V6 F/I	33-2395	HP-2011
MKZ	3.5L V6 F/I	33-2395	HP-2011
Navigator	5.4L V8 F/I	33-2385 ♦	HP-2010
2012 LINCOLN			
MKS	3.5L V6 F/I	33-2395	HP-2011
MKS	3.7L V6 F/I	33-2395	HP-2011
MKT	3.5L V6 F/I	33-2395	HP-2011
MKT	3.7L V6 F/I	33-2395	HP-2011
MKX	3.7L V6 F/I	33-2395	HP-2011
MKZ	2.5L L4 F/I		HP-1002
MKZ	3.5L V6 F/I	33-2395	HP-2011
Navigator	5.4L V8 F/I	33-2385 ♦	HP-2010
2011 LINCOLN			
MKS	3.5L V6 F/I	33-2395	HP-2011
MKS	3.7L V6 F/I	33-2395	HP-2011
MKT	3.5L V6 F/I	33-2395	HP-2011
MKT	3.7L V6 F/I	33-2395	HP-2011
MKX	3.7L V6 F/I	33-2395	HP-2011
MKZ	2.5L L4 F/I		HP-1002
MKZ	3.5L V6 F/I	33-2395	HP-2011
Navigator	5.4L V8 F/I	33-2385 ♦	HP-2010
Town Car	4.6L V8 F/I	33-2272	HP-2010
2010 LINCOLN			
MKS	3.5L V6 F/I	33-2395	HP-2011
MKS	3.7L V6 F/I	33-2395	HP-2011
MKT	3.5L V6 F/I	33-2395	HP-2011
MKT	3.7L V6 F/I	33-2395	HP-2011
MKX	3.5L V6 F/I	33-2395	HP-2011
MKZ	3.5L V6 F/I	33-2395	HP-2011
Navigator	5.4L V8 F/I	33-2385 ♦	HP-2010
Town Car	4.6L V8 F/I	33-2272	HP-2010
2009 LINCOLN			
MKS	3.7L V6 F/I	33-2395	HP-2009
MKX	3.5L V6 F/I	33-2395	
MKX	3.5L V6 F/I - Built After 1-15-09	33-2395	HP-2011
MKX	3.5L V6 F/I - Built Before 1-15-09	33-2395	HP-2009
MKZ	3.5L V6 F/I	33-2395	HP-2009
Navigator	5.4L V8 F/I	33-2385 ♦	HP-2010
Town Car	4.6L V8 F/I	33-2272	HP-2010
2008 LINCOLN			
Mark LT	5.4L V8 F/I	33-2287 ♦	HP-2010
MKX	3.5L V6 F/I	33-2395	HP-2009
MKZ	3.5L V6 F/I	33-2395	HP-2009
Navigator	5.4L V8 F/I	33-2385 ♦	HP-2010
Town Car	4.6L V8 F/I	33-2272	HP-2010
2007 LINCOLN			
Mark LT	5.4L V8 F/I	33-2287 ♦	HP-2010
MKX	3.5L V6 F/I	33-2395	HP-2009
MKZ	3.5L V6 F/I	33-2395	HP-2009
Navigator	5.4L V8 F/I	33-2385 ♦	HP-2010
2007 LINCOLN			
Town Car	4.6L V8 F/I	33-2272	HP-2010
2006 LINCOLN			
LS	3.9L V8 F/I	33-2266	HP-1014
Mark LT	5.4L V8 F/I	33-2287 ♦	HP-2010
Navigator	5.4L V8 F/I	33-2287	HP-2010
Town Car	4.6L V8 F/I	33-2272	HP-2010
Zephyr	3.0L V6 F/I	33-2340	HP-2010
2005 LINCOLN			
Aviator	4.6L V8 F/I	33-2207	HP-2010
LS	3.0L V6 F/I	33-2266	HP-2009
LS	3.9L V8 F/I	33-2266	HP-1014
Navigator	5.4L V8 F/I	33-2287	HP-2010
Town Car	4.6L V8 F/I	33-2272	HP-2010
2004 LINCOLN			
Aviator	4.6L V8 F/I	33-2207	HP-2010
LS	3.0L V6 F/I	33-2266	HP-2009
LS	3.9L V8 F/I	33-2266	HP-1014
Navigator	5.4L V8 F/I	E-0945 ♦	HP-2010
Town Car	4.6L V8 F/I	33-2272	HP-2010
2003 LINCOLN			
Aviator	4.6L V8 F/I	33-2207	HP-2010
LS	3.0L V6 F/I	33-2266	HP-2009
LS	3.9L V8 F/I	33-2266	
Navigator	5.4L V8 F/I	E-0945 ♦	HP-2010
Town Car	4.6L V8 F/I	33-2272	HP-2010
2002 LINCOLN			
Blackwood	5.4L V8 F/I	E-0945	HP-2010
Continental	4.6L V8 F/I	E-0945	HP-2010
LS	3.0L V6 F/I	33-2266	HP-2009
LS	3.9L V8 F/I	33-2266	
Navigator	5.4L V8 F/I	E-0945 ♦	HP-2010
Town Car	4.6L V8 F/I	33-2272	HP-2010
2001 LINCOLN			
Continental	4.6L V8 F/I	E-0945	HP-2010
LS	3.0L V6 F/I	33-2266	HP-2009
LS	3.9L V8 F/I	33-2266	
Navigator	5.4L V8 F/I	E-0945 ♦	HP-2010
Town Car	4.6L V8 F/I	33-2272	HP-2010
2000 LINCOLN			
Continental	4.6L V8 F/I	E-0945	HP-2010
LS	3.0L V6 F/I	33-2266	HP-2009
LS	3.9L V8 F/I	33-2266	
Navigator	5.4L V8 F/I	E-0945 ♦	HP-2010
Town Car	4.6L V8 F/I	33-2272	HP-2010
1999 LINCOLN			
Continental	4.6L V8 F/I	E-0945	HP-2010
Navigator	5.4L V8 F/I	E-0945	HP-2010
		E-0945 ♦	HP-2010
Town Car	4.6L V8 F/I	33-2272	HP-2010
1998 LINCOLN			
Continental	4.6L V8 F/I	E-0945	HP-2010
Mark VIII	4.6L V8 F/I	33-2073	HP-2010
Navigator	5.4L V8 F/I	E-0945 ♦	HP-2010
Town Car	4.6L V8 F/I	33-2272	HP-2010
1997 LINCOLN			
Continental	4.6L V8 F/I	E-0945	HP-2010
Mark VIII	4.6L V8 F/I	33-2073	HP-2010
Town Car	4.6L V8 F/I	33-2272	HP-2010

*Indicates 2 filters required ♦ - Intake kit available - see page 80 Applications updated daily at knfilters.com

Vehicle	Engine Type	Air Filter	Oil Filter
1996 LINCOLN			
Continental	4.6L V8 F/I	E-0945	HP-2010
Mark VIII	4.6L V8 F/I	33-2073	HP-2010
Town Car	4.6L V8 F/I	33-2272	HP-2010
1995 LINCOLN			
Continental	4.6L V8 F/I	E-0945	HP-2010
Mark VIII	4.6L V8 F/I	33-2073	HP-2010
Town Car	4.6L V8 F/I	33-2272	HP-2010
1994 LINCOLN			
Continental	3.8L V6 F/I	33-2024	HP-2009
Mark VIII	4.6L V8 F/I	33-2073	HP-2010
Town Car	4.6L V8 F/I	33-2272	HP-2010
1993 LINCOLN			
Continental	3.8L V6 F/I	33-2024	HP-2009
Mark VIII	4.6L V8 F/I	33-2073	HP-2010
Town Car	4.6L V8 F/I	33-2272	HP-2010
1992 LINCOLN			
Mark VII	5.0L V8 F/I	33-2015	HP-3001
Town Car	4.6L V8 F/I	33-2272	HP-2010
1991 LINCOLN			
Continental	3.8L V6 F/I	33-2024	HP-2009
Mark VII	5.0L V8 F/I	33-2015	HP-3001
Town Car	4.6L V8 F/I		HP-2010
1990 LINCOLN			
Mark VII	5.0L V8 F/I	33-2015	HP-3001
Town Car	5.0L V8 F/I	33-2012	HP-3001
1989 LINCOLN			
Continental	3.8L V6 F/I	33-2024	HP-2009
Mark VII	5.0L V8 F/I	33-2015	HP-3001
Town Car	5.0L V8 F/I	33-2012	HP-3001
1988 LINCOLN			
Mark VII	5.0L V8 F/I	33-2015	HP-3001
Town Car	5.0L V8 F/I	33-2012	HP-3001
1987 LINCOLN			
Mark VII	5.0L V8 F/I	33-2015	HP-3001
Town Car	5.0L V8 F/I	33-2012	HP-3001
1986 LINCOLN			
Mark VII	5.0L V8 F/I	33-2015	HP-3001
1985 LINCOLN			
Continental	5.0L V8 F/I	E-1290	HP-3001
1984 LINCOLN			
Town Car	5.0L V8 F/I	E-1290	HP-3001
1981 LINCOLN			
Mark VI	5.0L V8 F/I	E-1290	HP-3001
1980 LINCOLN			
Mark VI	351 V8 CARB	E-1290	HP-3001
1979 LINCOLN			
Continental	400 V8 CARB	E-1290	HP-3001
1978 LINCOLN			
Continental	460 V8 CARB	E-1580	HP-3001
1977 LINCOLN			
Continental	460 V8 CARB	E-1580	HP-3001
1976 LINCOLN			
Continental	460 V8 CARB	E-1580	HP-3001
Mark IV	460 V8 CARB	E-1580	HP-3001

Vehicle	Engine Type	Air Filter	Oil Filter
1969 LINCOLN			
Mark III	460 V8 CARB	E-1570	HP-3001
1967 LINCOLN			
Continental	462 V8 CARB		HP-3001
1965 LINCOLN			
Continental	430 V8 CARB		HP-3001
1963 LINCOLN			
Continental	430 V8 CARB		HP-3001
2011 LOTUS			
Elise	1.8L L4 F/I		HP-1003
Evora	3.5L V6 F/I	33-2355	
2010 LOTUS			
Elise	1.8L L4 F/I		HP-1003
Elise	1.8L L4 F/I - w/Toyota Eng.	33-2252	HP-1003
Evora	3.5L V6 F/I	33-2355	
Exige	1.8L L4 F/I	33-2252	HP-1003
2009 LOTUS			
Elise	1.8L L4 F/I		HP-1003
Elise	1.8L L4 F/I - w/Toyota Eng.	33-2252	HP-1003
Exige	1.8L L4 F/I	33-2252	HP-1003
2008 LOTUS			
Exige	1.8L L4 F/I	33-2647 ♦	
2007 LOTUS			
Elise	1.8L L4 F/I - w/Toyota Eng.	33-2252 ♦	
Exige	1.8L L4 F/I	33-2647 ♦	
2006 LOTUS			
Elise	1.8L L4 F/I - w/Toyota Eng.	33-2252 ♦	
Exige	1.8L L4 F/I	33-2647 ♦	
2005 LOTUS			
Elise	1.8L L4 F/I - Exc., Toyota Eng.	33-2647 ♦	
Elise	1.8L L4 F/I - w/Toyota Eng.	33-2252 ♦	
Exige	1.8L L4 F/I	33-2647 ♦	
2004 LOTUS			
Elise	1.8L L4 F/I - Exc., Toyota Eng.	33-2647 ♦	
Elise	1.8L L4 F/I - w/Toyota Eng.	33-2252 ♦	
2003 LOTUS			
Elise	1.8L L4 F/I	33-2647 ♦	
1995 LOTUS			
Esprit	2.2L L4 F/I		HP-2004
1994 LOTUS			
Esprit	2.2L L4 F/I		HP-2004
1991 LOTUS			
Elan	1.6L L4 F/I	E-2360	HP-1004
Esprit	2.2L L4 F/I		HP-2004
Excel	2.2L L4 CARB	33-2784	
1990 LOTUS			
Esprit	2.2L L4 F/I		HP-2004
1989 LOTUS			
Esprit	2.2L L4 F/I		HP-2004
Excel	2.2L L4 CARB	33-2784	

*Indicates 2 filters required ♦ - Intake kit available - see page 80 Applications updated daily at knfilters.com

Vehicle	Engine Type	Air Filter	Oil Filter
1988 LOTUS			
Esprit	2.2L L4 CARB	33-2011	HP-2004
Esprit	2.2L L4 F/I		HP-2004
Excel	2.2L L4 CARB	33-2784	
1985 LOTUS			
Esprit	2.2L L4 CARB	33-2011	HP-2004
1979 LOTUS			
Eclat	120 L4 CARB	33-2011	
1977 LOTUS			
Esprit	120 L4 CARB	33-2011	HP-2004
1969 LOTUS			
Cortina	1.6L - Twin Cam	E-9002	
1968 LOTUS			
Cortina	1.6L - Twin Cam	E-9002	
2007 MAHINDRA			
Scorpio	2.2L L4 DSL	33-2939	
Scorpio	2.6L L4 DSL	33-2939	
2006 MAHINDRA			
Scorpio	2.2L L4 DSL	33-2939	
Scorpio	2.6L L4 DSL	33-2939	
2005 MAHINDRA			
Scorpio	2.2L L4 DSL	33-2939	
Scorpio	2.6L L4 DSL	33-2939	
2002 MALAYSIA			
Kelisa 700	1.0L L4 - EJ-DE	33-2836	
2012 MARUTI SUZUKI			
Alto K10	1.0L L3 F/I	33-2986	
2011 MARUTI SUZUKI			
Alto K10	1.0L L3 F/I	33-2986	
2010 MARUTI SUZUKI			
Alto K10	1.0L L3 F/I - from 8/10	33-2986	
Wagon R	1.0L L3 F/I	33-2979	
2008 MARUTI SUZUKI			
Swift	1.3L L4 DSL	33-2952	
2007 MARUTI SUZUKI			
Esteem	1.3L L4 F/I	E-9132	
Swift	1.3L L4 F/I	33-2910	
2006 MARUTI SUZUKI			
Esteem	1.3L L4 F/I	E-9132	
Swift	1.3L L4 F/I	33-2910	
2005 MARUTI SUZUKI			
800	0.8L L3 F/I	E-2297	
Esteem	1.3L L4 F/I	E-9132	
Swift	1.3L L4 F/I	33-2910	
2004 MARUTI SUZUKI			
800	0.8L L3 F/I	E-2297	
Esteem	1.3L L4 F/I	E-9132	
Swift	1.3L L4 F/I	33-2910	
2003 MARUTI SUZUKI			
800	0.8L L3 F/I	E-2297	
Swift	1.3L L4 F/I	33-2910	
2002 MARUTI SUZUKI			
800	0.8L L3 F/I	E-2297	
Swift	1.3L L4 F/I	33-2910	

Vehicle	Engine Type	Air Filter	Oil Filter
1984 MASERATI			
Biturbo	2.5L V6 CARB	33-2576	
2009 MAYBACH			
62	6.0L V12 F/I	33-2412	
2008 MAYBACH			
62	6.0L V12 F/I	33-2412	
2006 MAYBACH			
57	5.5L V12 F/I	33-2412	
2004 MAYBACH			
57	5.5L V12 F/I	33-2412	
62	5.5L V12 F/I	33-2412	
2013 MAZDA			
2	1.5L L4 F/I	33-2924	HP-1008
3	1.6L L4 DSL	E-2993 ♦	
3	1.6L L4 F/I	33-2924	
3	2.0L L4 F/I	33-2293	
6	2.5L L4 F/I	33-2424 ♦	HP-1002
6	3.7L V6 F/I	33-2395	
CX-5	2.0L L4 F/I		HP-1008
Mazdaspeed3	2.3L L4 F/I	33-2293 ♦	HP-1002
MX-5 Miata	2.0L L4 F/I	33-2335	
2012 MAZDA			
2	1.3L L4 F/I	33-2924	
2	1.5L L4 F/I	33-2924	HP-1008
2	1.6L L4 DSL	33-2955	
3	1.6L L4 DSL	E-2993 ♦	
3	1.6L L4 F/I	33-2924	
3	2.0L L4 F/I - Exc. Skyactiv		HP-1002
3	2.0L L4 F/I - Skyactiv		HP-1008
3	2.0L L4 F/I - US, Exc. Skyactiv	33-2293	
3	2.2L L4 DSL	33-2293	
3	2.5L L4 F/I	33-2293 ♦	HP-1002
5	1.6L L4 DSL	E-2993 ♦	
5	2.5L L4 F/I	33-2293	HP-1002
5 Van	1.8L L4 F/I	33-2293	
6	1.8L L4 F/I	33-2278	
6	2.0L L4 F/I	33-2278	
6	2.5L L4 F/I	33-2424 ♦	HP-1002
6	3.7L V6 F/I	33-2395	HP-2009
CX-7	2.3L L4 F/I	33-2279	HP-1002
CX-7	2.5L L4 F/I	33-2279	HP-1002
CX-9	3.7L V6 F/I	33-2395	HP-2009
Mazdaspeed3	2.3L L4 F/I	33-2293 ♦	HP-1002
MX-5 Miata	2.0L L4 F/I	33-2335	HP-1002
2011 MAZDA			
2	1.3L L4 F/I	33-2924	
2	1.5L L4 F/I	33-2924	HP-1008
2	1.6L L4 DSL	33-2955	
3	1.6L L4 DSL	E-2993 ♦	
3	1.6L L4 F/I	33-2924	
3	2.0L L4 F/I		HP-1002
3	2.0L L4 F/I - Non-US, Exc., DISI eng	33-2293	HP-1002
3	2.0L L4 F/I - US	33-2293	HP-1002
3	2.2L L4 DSL	33-2293	
3	2.5L L4 F/I	33-2293 ♦	HP-1002
5	1.6L L4 DSL	E-2993 ♦	
5 Van	1.8L L4 F/I	33-2293	
6	1.8L L4 F/I	33-2278	
6	2.0L L4 F/I	33-2278	
6	2.5L L4 F/I		HP-1002

*Indicates 2 filters required ♦ - Intake kit available - see page 80 Applications updated daily at knfilters.com

Vehicle	Engine Type	Air Filter	Oil Filter
2011 MAZDA			
6	2.5L L4 F/I - US	33-2424 ♦	HP-1002
6	3.7L V6 F/I	33-2395	HP-2009
CX-7	2.3L L4 F/I	33-2279	HP-1002
CX-7	2.5L L4 F/I	33-2279	HP-1002
CX-9	3.7L V6 F/I	33-2395	HP-2009
Mazdaspeed3	2.3L L4 F/I	33-2293 ♦	HP-1002
MX-5 Miata	2.0L L4 F/I	33-2335	HP-1002
RX-8	1.3L R2 F/I	33-2284 ♦	HP-1010
Tribute	2.5L L4 F/I	33-2187	HP-1002
Tribute	3.0L V6 F/I	E-1990	HP-2011
Tribute Hybrid	2.5L L4 F/I	33-2347	HP-1002
2010 MAZDA			
2	1.3L L4 F/I	33-2924	
2	1.5L L4 F/I	33-2924	HP-1002
2	1.6L L4 DSL - from 10/10	33-2955	
2	1.6L L4 DSL - to 9/10	33-2924	
3	1.6L L4 DSL	E-2993 ♦	
3	1.6L L4 F/I	33-2924	
3	2.0L L4 F/I		HP-1002
3	2.0L L4 F/I - Non-US, Exc., DISI eng	33-2293	HP-1002
3	2.0L L4 F/I - US	33-2293	HP-1002
3	2.2L L4 DSL	33-2293	
3	2.5L L4 F/I	33-2293 ♦	HP-1002
5	1.6L L4 DSL	E-2993 ♦	
5 Van	1.8L L4 F/I	33-2293	
5 Van	2.0L L4 DSL	33-2293	
5 Van	2.0L L4 F/I	33-2293	
5 Van	2.3L L4 F/I	33-2293	HP-1002
6	1.8L L4 F/I	33-2278	
6	2.0L L4 DSL	33-2278	
6	2.0L L4 F/I	33-2278	
6	2.2L L4 DSL	33-2278	
6	2.5L L4 F/I		HP-1002
6	2.5L L4 F/I - Non-US	33-2278 ♦	HP-1002
6	2.5L L4 F/I - US	33-2424 ♦	HP-1002
6	3.7L V6 F/I	33-2395	HP-2009
CX-7	2.3L L4 F/I	33-2279	HP-1002
CX-7	2.5L L4 F/I	33-2279	HP-1002
CX-9	3.7L V6 F/I	33-2395	HP-2009
Mazdaspeed3	2.3L L4 F/I	33-2293 ♦	HP-1002
MX-5 III	1.8L L4 F/I	33-2335 ♦	
MX-5 III	2.0L L4 F/I	33-2335	
MX-5 Miata	2.0L L4 F/I	33-2335	HP-1002
RX-8	1.3L R2 F/I	33-2284 ♦	HP-1010
Tribute	2.5L L4 F/I	33-2187	HP-1002
Tribute	3.0L V6 F/I	E-1990	HP-2011
Tribute Hybrid	2.5L L4 F/I	33-2347	HP-1002
2009 MAZDA			
2	1.3L L4 F/I	33-2924	
2	1.5L L4 F/I	33-2924	
2	1.6L L4 DSL	33-2924	
3	1.6L L4 DSL - From 6/09	E-2993 ♦	
3	1.6L L4 DSL - To 5/09	33-2874 ♦	
3	1.6L L4 F/I	33-2924	
3	2.0L L4 F/I		HP-1002
3	2.0L L4 F/I - Non-US, Exc., DISI eng	33-2293 ♦	HP-1002
3	2.0L L4 F/I - US	33-2293 ♦	HP-1002
3	2.2L L4 DSL	33-2293	
3	2.3L L4 F/I	33-2293 ♦	HP-7013
5 Van	1.8L L4 F/I	33-2293	
5 Van	2.0L L4 DSL	33-2293	
5 Van	2.0L L4 F/I	33-2293	
5 Van	2.3L L4 F/I	33-2293	HP-7013
6	1.8L L4 F/I	33-2278 ♦	
6	2.0L L4 DSL	33-2278	
6	2.0L L4 F/I	33-2278 ♦	
6	2.2L L4 DSL	33-2278	
6	2.5L L4 F/I - Cartridge		HP-7013
6	2.5L L4 F/I - Non-US	33-2278 ♦	
6	2.5L L4 F/I - Spin On		HP-1002
6	2.5L L4 F/I - US	33-2424 ♦	
6	3.7L V6 F/I	33-2395	HP-2009
B2300	2.3L L4 F/I	33-2106-1	HP-1002
B4000	4.0L V6 F/I	33-2106-1 ♦	HP-2010
CX-7	2.3L L4 F/I	33-2279	HP-7013
CX-9	3.7L V6 F/I	33-2395	HP-2009
Mazdaspeed3	2.3L L4 F/I	33-2293 ♦	HP-7013
MX-5 III	2.0L L4 F/I	33-2335 ♦	
MX-5 Miata	2.0L L4 F/I	33-2335	HP-1002
RX-8	1.3L R2 F/I	33-2284 ♦	HP-1010
Tribute	2.5L L4 F/I	33-2187	
Tribute	2.5L L4 F/I - Cartridge	33-2187	HP-7013
Tribute	3.0L V6 F/I	E-1990	HP-2011
Tribute Hybrid	2.5L L4 F/I	33-2347	HP-7013
2008 MAZDA			
3	1.4L L4 F/I	33-2924	
3	1.6L L4 DSL	33-2874	
3	1.6L L4 F/I	33-2924	
3	2.0L L4 DSL	33-2293	
3	2.0L L4 F/I	33-2293 ♦	HP-1002
3	2.3L L4 F/I	33-2293 ♦	HP-7013
5 Van	1.8L L4 F/I	33-2293	
5 Van	2.0L L4 DSL	33-2293	
5 Van	2.0L L4 F/I	33-2293	
5 Van	2.3L L4 F/I	33-2293 ♦	HP-7013
6	1.8L L4 F/I	33-2278 ♦	
6	2.0L L4 DSL	33-2278	
6	2.0L L4 F/I	33-2278 ♦	
6	2.3L L4 F/I		HP-7013
6	2.3L L4 F/I - Non-US	33-2279 ♦	HP-7013
6	2.3L L4 F/I - US	33-2278 ♦	HP-7013
6	2.5L L4 F/I	33-2278 ♦	
6	3.0L V6 F/I	33-2279	HP-2010
B2300	2.3L L4 F/I	33-2106-1	HP-1002
B3000	3.0L V6 F/I	33-2106-1	HP-2009
B4000	4.0L V6 F/I	33-2106-1 ♦	HP-2010
CX-7	2.3L L4 F/I	33-2279	HP-7013
CX-9	3.7L V6 F/I	33-2395	HP-2009
Mazdaspeed3	2.3L L4 F/I	33-2293 ♦	HP-7013
MX-5	2.0L L4 F/I	33-2335	HP-1002
MX-5 III	1.8L L4 F/I	33-2335 ♦	
MX-5 III	2.0L L4 F/I	33-2335 ♦	HP-1002
MX-5 Miata	2.0L L4 F/I	33-2335	HP-1002
RX-8	1.3L R2 F/I	33-2284 ♦	HP-1008
Tribute	2.3L L4 F/I	33-2187	HP-1002
Tribute	3.0L V6 F/I	33-2187	HP-2010
Tribute Hybrid	2.3L L4 F/I		HP-7013
2007 MAZDA			
2	1.5L L4 F/I	33-2924	
3	1.4L L4 F/I	33-2924	
3	1.6L L4 DSL	33-2874	
3	1.6L L4 F/I	33-2924	
3	2.0L L4 DSL	33-2293	

*Indicates 2 filters required ♦ - Intake kit available - see page 80 Applications updated daily at knfilters.com

Vehicle	Engine Type	Air Filter	Oil Filter
2007 MAZDA			
3	2.0L L4 F/I	33-2293♦	
3	2.0L L4 F/I - VIN F	33-2293	HP-1002
3	2.0L L4 F/I - VIN G	33-2293	HP-7013
3	2.3L L4 F/I	33-2293♦	HP-7013
5 Van	1.8L L4 F/I	33-2293	
5 Van	2.0L L4 DSL	33-2293	
5 Van	2.0L L4 F/I	33-2293	
5 Van	2.3L L4 F/I	33-2293♦	HP-7013
6	1.8L L4 F/I	33-2278♦	
6	2.0L L4 DSL	33-2278	
6	2.0L L4 F/I	33-2278♦	
6	2.3L L4 F/I		HP-7013
6	2.3L L4 F/I - Non-US	33-2279♦	HP-7013
6	2.3L L4 F/I - US	33-2278♦	HP-7013
6	2.5L L4 F/I	33-2278	
6	3.0L V6 F/I	33-2279♦	HP-2010
B2300	2.3L L4 F/I	33-2106-1	HP-1002
B3000	3.0L V6 F/I	33-2106-1♦	HP-2009
B4000	4.0L V6 F/I	33-2106-1♦	HP-2010
CX-7	2.3L L4 F/I	33-2279	HP-7013
CX-9	3.5L V6 F/I	33-2395	HP-2009
Mazdaspeed3	2.3L L4 F/I	33-2293♦	HP-7013
Mazdaspeed6	2.3L L4 F/I	33-2279	HP-7013
MX-5	2.0L L4 F/I	33-2335	HP-1002
MX-5 III	1.8L L4 F/I	33-2335♦	
MX-5 III	2.0L L4 F/I	33-2335♦	HP-1002
MX-5 Miata	2.0L L4 F/I	33-2335	HP-1002
RX-8	1.3L R2 F/I	33-2284♦	HP-1008
2006 MAZDA			
3	1.4L L4 F/I	33-2924	
3	1.6L L4 DSL	33-2874	
3	1.6L L4 F/I	33-2924	
3	2.0L L4 F/I	33-2293♦	
3	2.0L L4 F/I - VIN F	33-2293	HP-1002
3	2.0L L4 F/I - VIN G	33-2293	HP-7013
3	2.3L L4 F/I	33-2293♦	HP-7013
5 Van	1.8L L4 F/I	33-2293	
5 Van	2.0L L4 DSL	33-2293	
5 Van	2.0L L4 F/I	33-2293	
5 Van	2.3L L4 F/I		HP-7013
6	1.8L L4 F/I	33-2278♦	
6	2.0L L4 DSL	33-2278	
6	2.0L L4 F/I	33-2278♦	
6	2.3L L4 F/I	33-2278♦	HP-7013
6	3.0L V6 F/I	33-2279♦	HP-2010
B2300	2.3L L4 F/I	33-2106-1	HP-1002
B3000	3.0L V6 F/I	33-2106-1♦	HP-2009
B4000	4.0L V6 F/I	33-2106-1♦	HP-2010
Mazdaspeed6	2.3L L4 F/I - US	33-2279	HP-7013
MPV	3.0L V6 F/I	33-2278	HP-2010
MPV II	3.0L V6 F/I	33-2177-1	HP-2010
MX-5	2.0L L4 F/I	33-2335	HP-1002
MX-5 III	1.8L L4 F/I	33-2335♦	
MX-5 III	2.0L L4 F/I	33-2335♦	HP-1002
MX-5 Miata	2.0L L4 F/I	33-2335	HP-1002
RX-8	1.3L R2 F/I	33-2284♦	HP-1008
Tribute	2.3L L4 F/I	33-2187	HP-1002
Tribute	3.0L V6 F/I	33-2187	HP-2010
2005 MAZDA			
3	1.4L L4 F/I	33-2924	
3	1.6L L4 DSL	33-2874	
3	1.6L L4 F/I	33-2924	
3	2.0L L4 F/I	33-2293♦	HP-1002
3	2.3L L4 F/I	33-2293♦	HP-7013
6	1.8L L4 F/I	33-2278♦	
6	2.0L L4 DSL	33-2278	
6	2.0L L4 F/I	33-2278♦	
6	2.3L L4 F/I	33-2278♦	HP-7013
6	3.0L V6 F/I	33-2279♦	HP-2010
B2300	2.3L L4 F/I	33-2106-1	HP-2009
B3000	3.0L V6 F/I	33-2106-1♦	HP-2009
B4000	4.0L V6 F/I	33-2106-1♦	HP-2010
Miata	1.8L L4 F/I	33-2676♦	HP-1008
Miata Mazdaspeed	1.8L L4 F/I	33-2676	HP-1008
MPV	3.0L V6 F/I	33-2278	HP-2010
MPV II	3.0L V6 F/I	33-2177-1	HP-2010
MX-5 II	1.8L L4 F/I	33-2676♦	
MX-5 III	1.8L L4 F/I	33-2335♦	
RX-8	1.3L R2 F/I	33-2284♦	HP-1008
Tribute	2.0L L4 F/I	33-2187	HP-1012
Tribute	2.3L L4 F/I	33-2187	HP-1002
Tribute	3.0L V6 F/I	33-2187	HP-2010
2004 MAZDA			
3	1.4L L4 F/I	33-2924	
3	1.6L L4 DSL	33-2874	
3	1.6L L4 F/I	33-2924	
3	2.0L L4 F/I	33-2293♦	HP-1002
3	2.3L L4 F/I	33-2293♦	HP-7013
6	1.8L L4 F/I	33-2278♦	
6	2.0L L4 DSL	33-2278	
6	2.0L L4 F/I	33-2278♦	
6	2.3L L4 F/I	33-2278♦	HP-7013
6	3.0L V6 F/I	33-2279♦	HP-2010
323 VI	1.4L L4 F/I	33-2824	
323 VI	1.9L L4 F/I	33-2134	
323 VI	2.0L L4 DSL	33-2223	
323 VI	2.0L V6 F/I	33-2134	
B2300	2.3L L4 F/I	33-2106-1	HP-2009
B3000	3.0L V6 F/I	33-2106-1♦	HP-2009
B4000	4.0L V6 F/I	33-2106-1♦	HP-2010
B-Series	2.5L L4 DSL	33-2167	
Miata	1.8L L4 F/I	33-2676♦	HP-1008
Miata Mazdaspeed	1.8L L4 F/I	33-2676	HP-1008
MPV	3.0L V6 F/I	33-2278	HP-2010
MPV II	3.0L V6 F/I	33-2177-1	HP-2010
MX-5 II	1.8L L4 F/I	33-2676♦	HP-1008
RX-8	1.3L R2 F/I	33-2284♦	HP-1008
Tribute	3.0L V6 F/I	33-2187	HP-2010
2003 MAZDA			
3	1.4L L4 F/I	33-2924	
3	1.6L L4 F/I	33-2924	
3	2.0L L4 F/I	33-2293♦	
6	1.8L L4 F/I	33-2278♦	
6	2.0L L4 DSL	33-2278	
6	2.0L L4 F/I	33-2278♦	
6	2.3L L4 F/I	33-2278♦	HP-7013
6	3.0L V6 F/I	33-2279♦	HP-2010
323 VI	1.4L L4 F/I	33-2824	
323 VI	1.6L L4 F/I	33-2134	
323 VI	2.0L L4 DSL	33-2223	
323 VI	2.0L V6 F/I	33-2134	
B2300	2.3L L4 F/I	33-2106-1♦	HP-2009
B3000	3.0L V6 F/I	33-2106-1♦	HP-2009
B4000	4.0L V6 F/I	33-2106-1♦	HP-2010
B-Series	2.5L L4 DSL	33-2167	
Miata	1.8L L4 F/I	33-2676♦	HP-1008

*Indicates 2 filters required ♦ - Intake kit available - see page 80 Applications updated daily at knfilters.com

Vehicle	Engine Type	Air Filter	Oil Filter
2003 MAZDA			
MPV	3.0L V6 F/I	33-2177-1	HP-2010
MPV II	3.0L V6 F/I	33-2177-1	HP-2010
MX-5 II	1.8L L4 F/I	33-2676 ♦	HP-1008
Protege	1.6L L4 F/I	33-2134	HP-1008
Protege	2.0L L4 F/I	33-2134 ♦	HP-1008
Protege Mazdaspeed	2.0L L4 F/I	33-2134	HP-1008
Protege5	2.0L L4 F/I	33-2134 ♦	HP-1008
RX-8	1.3L R2 F/I	33-2284 ♦	
Tribute	2.0L L4 F/I	33-2187	HP-1012
Tribute	3.0L V6 F/I	33-2187	HP-2010
2002 MAZDA			
6	2.3L L4 F/I	33-2278 ♦	
626	2.0L L4 F/I	33-2157	HP-1008
626	2.5L V6 F/I	33-2157	HP-1010
626 V	1.8L L4 F/I	33-2676	
626 V	2.0L L4 DSL	33-2177-1	
626 V	2.0L L4 F/I	33-2676	HP-1008
B2300	2.3L L4 F/I	33-2106-1 ♦	HP-2009
B3000	3.0L V6 F/I	33-2106-1 ♦	HP-2009
B4000	4.0L V6 F/I	33-2106-1 ♦	HP-2010
B-Series	2.5L L4 DSL	33-2167	
Miata	1.8L L4 F/I	33-2676 ♦	HP-1008
Millenia	2.3L V6 F/I	33-2672	HP-1010
Millenia	2.5L V6 F/I	33-2072	HP-1010
MPV	3.0L V6 F/I	33-2177-1	HP-2010
MPV II	3.0L V6 F/I	33-2177-1	HP-2010
MX-5 II	1.8L L4 F/I	33-2676 ♦	HP-1008
Protege	1.6L L4 F/I		HP-1008
Protege	2.0L L4 F/I	33-2134 ♦	HP-1008
Protege5	2.0L L4 F/I	33-2134 ♦	HP-1008
Tribute	2.0L L4 F/I	33-2187	HP-1012
Tribute	3.0L V6 F/I	33-2187	HP-2010
2001 MAZDA			
626	2.0L L4 F/I	33-2157	HP-1008
626	2.5L V6 F/I	33-2157	HP-1010
626 V	1.8L L4 F/I	33-2676	
626 V	2.0L L4 DSL	33-2177-1	
626 V	2.0L L4 F/I	33-2676	HP-1008
B2300	2.3L L4 F/I	33-2106-1 ♦	HP-2009
B2500	2.5L L4 F/I	33-2106-1 ♦	HP-2009
B3000	3.0L V6 F/I	33-2106-1 ♦	HP-2009
B4000	4.0L V6 F/I	33-2106-1 ♦	HP-2010
Miata	1.8L L4 F/I	33-2676 ♦	HP-1008
Millenia	2.3L V6 F/I	33-2672	HP-1010
Millenia	2.5L V6 F/I	33-2072	HP-1010
MPV	2.5L V6 F/I	33-2177-1	HP-2010
MPV II	2.0L L4 F/I	33-2177-1	
MPV II	2.5L V6 F/I	33-2177-1	HP-2010
MX-5 II	1.8L L4 F/I	33-2676 ♦	HP-1008
Protege	1.6L L4 F/I	33-2134	HP-1008
Protege	1.8L L4 F/I	33-2134	
Protege	2.0L L4 F/I	33-2134	HP-1008
Tribute	2.0L L4 F/I	33-2187	HP-1012
Tribute	3.0L V6 F/I	33-2187	HP-2010
2000 MAZDA			
626	2.0L L4 F/I	33-2157	HP-1008
626	2.5L V6 F/I	33-2157	HP-1010
626 V	1.8L L4 F/I	33-2676	
626 V	2.0L L4 DSL	33-2177-1	
626 V	2.0L L4 F/I	33-2676	HP-1008
B2500	2.5L L4 F/I	33-2106-1 ♦	HP-2009
B3000	3.0L V6 F/I	33-2106-1 ♦	HP-2009
2000 MAZDA			
B4000	4.0L V6 F/I	33-2106-1 ♦	HP-3001
Miata	1.8L L4 F/I	33-2676 ♦	HP-1008
Millenia	2.3L V6 F/I	33-2672	HP-1010
Millenia	2.5L V6 F/I	33-2072	HP-1010
MPV	2.5L V6 F/I	33-2177-1	HP-2010
MPV II	2.0L L4 F/I	33-2177-1	
MPV II	2.5L V6 F/I	33-2177-1	HP-2010
MX-5 II	1.8L L4 F/I	33-2676 ♦	HP-1008
Protege	1.6L L4 F/I	33-2134	HP-1008
Protege	1.8L L4 F/I	33-2134	HP-1008
1999 MAZDA			
626	2.0L L4 F/I	33-2157	HP-1008
626	2.5L V6 F/I	33-2157	HP-1010
626 V	1.8L L4 F/I	33-2676	
626 V	2.0L L4 DSL	33-2177-1	
626 V	2.0L L4 F/I	33-2676	HP-1008
B2500	2.5L L4 F/I	33-2106-1 ♦	HP-2009
B3000	3.0L V6 F/I	33-2106-1 ♦	HP-2009
B4000	4.0L V6 F/I	33-2106-1 ♦	HP-3001
Bongo	2.5L L4 DSL - SGL3, SGL5, Up to VIN 40000	E-9280	
Miata	1.8L L4 F/I	33-2676 ♦	HP-1008
Millenia	2.3L V6 F/I	33-2672	HP-1010
Millenia	2.5L V6 F/I	33-2072	HP-1010
MX-5 II	1.8L L4 F/I	33-2676 ♦	HP-1008
Protege	1.6L L4 F/I	33-2134	HP-1008
Protege	1.8L L4 F/I	33-2134	HP-1008
1998 MAZDA			
626	2.0L L4 F/I	33-2157	HP-1008
626	2.5L V6 F/I	33-2157	HP-1010
626 V	1.8L L4 F/I	33-2676	
626 V	2.0L L4 DSL	33-2177-1	
626 V	2.0L L4 F/I	33-2676	HP-1008
B2500	2.5L L4 F/I	33-2106-1 ♦	HP-2009
B3000	3.0L V6 F/I	33-2106-1 ♦	HP-2009
B4000	4.0L V6 F/I	33-2106-1 ♦	HP-3001
Bongo	2.5L L4 DSL - SGL3, SGL5, Up to VIN 40000	E-9280	
Miata	1.8L L4 F/I	33-2676 ♦	HP-1008
Millenia	2.3L V6 F/I	33-2672	HP-1010
Millenia	2.5L V6 F/I	33-2072	HP-1010
MPV	3.0L V6 F/I	33-2117	HP-1010
MPV I	3.0L V6 F/I	33-2117	HP-1010
MX-5 I	1.6L L4 F/I - to 4/98	33-2034 ♦	
MX-5 II	1.6L L4 F/I - from 5/98	33-2676 ♦	
Protege	1.5L L4 F/I	33-2134	HP-1008
Protege	1.8L L4 F/I	33-2134	HP-1008
1997 MAZDA			
626	2.0L L4 F/I	33-2049	HP-1008
626	2.5L V6 F/I	33-2049	HP-1010
626 III	2.0L L4 F/I - 90/140BHP	33-2026	
626 IV	2.0L L4 F/I	33-2676	
626 IV	2.5L V6 F/I	33-2049	HP-1010
626 V	1.8L L4 F/I	33-2676	
626 V	2.0L L4 F/I	33-2676	HP-1008
B2300	2.3L L4 F/I	E-0995 ♦	HP-3001
B3000	3.0L V6 F/I	E-0995	HP-2009
B4000	4.0L V6 F/I	E-0995 ♦	HP-3001
Bongo	2.5L L4 DSL - SGL3, SGL5, Up to VIN 40000	E-9280	
Miata	1.8L L4 F/I	33-2034 ♦	HP-1008
Millenia	2.3L V6 F/I	33-2672	HP-1010
Millenia	2.5L V6 F/I	33-2072	HP-1010

*Indicates 2 filters required ♦ - Intake kit available - see page 80 Applications updated daily at knfilters.com

Vehicle	Engine Type	Air Filter	Oil Filter
1997 MAZDA			
MPV	3.0L V6 F/I	33-2117	HP-1010
MPV I	3.0L V6 F/I	33-2117	HP-1010
MX-5 I	1.6L L4 F/I	33-2034 ♦	
MX-5 I	1.8L L4 F/I	33-2676 ♦	
MX-6	2.0L L4 F/I	33-2049	HP-1008
MX-6	2.5L V6 F/I	33-2049 ♦	HP-1010
Protege	1.5L L4 F/I	33-2134	HP-1008
Protege	1.8L L4 F/I	33-2134	HP-1008
1996 MAZDA			
626	2.0L L4 F/I	33-2049	HP-1006
626	2.5L V6 F/I	33-2049	HP-1010
626 III	2.0L L4 F/I - 90/140BHP	33-2026	
626 III	2.2L L4 F/I	33-2026	
626 IV	1.8L L4 F/I	33-2676	
626 IV	2.0L L4 F/I	33-2676	HP-1006
626 IV	2.5L V6 F/I	33-2049	HP-1010
B2300	2.3L L4 F/I	E-0995 ♦	HP-3001
B3000	3.0L V6 F/I	E-0995	HP-2009
B4000	4.0L V6 F/I	E-0995	HP-3001
Bongo	2.5L L4 DSL - SGL3, SGL5, Up to VIN 40000	E-9280	
Miata	1.8L L4 F/I	33-2034 ♦	HP-1008
MPV	3.0L V6 F/I	33-2117	HP-1010
MPV I	3.0L V6 F/I	33-2117	HP-1010
MX-3	1.6L L4 F/I	33-2083	
MX-3	1.8L V6 F/I	33-2083	
MX-5 I	1.6L L4 F/I	33-2034 ♦	
MX-5 I	1.8L L4 F/I	33-2676 ♦	
MX-6	2.0L L4 F/I	33-2049	HP-1006
MX-6	2.5L V6 F/I	33-2049 ♦	HP-1010
Protege	1.5L L4 F/I	33-2134	HP-1008
Protege	1.8L L4 F/I	33-2134	HP-1008
RX-7 III	1.3L R2 F/I	33-2017	HP-1008
1995 MAZDA			
121 II	1.3L L4 F/I	E-9181	
626	2.0L L4 F/I	33-2049	HP-1006
626	2.5L V6 F/I	33-2049	HP-1010
626 III	2.0L L4 F/I - 90/140BHP	33-2026	
626 IV	2.0L L4 F/I	33-2676	HP-1006
626 IV	2.5L V6 F/I	33-2049	HP-1010
929	3.0L V6 F/I	33-2050-1	HP-1010
B2300	2.3L L4 F/I	E-0995 ♦	HP-3001
B3000	3.0L V6 F/I	E-0995	HP-2009
B4000	4.0L V6 F/I	E-0995	HP-3001
Bongo	2.5L L4 DSL - SGL3, SGL5, Up to VIN 40000	E-9280	
Miata	1.8L L4 F/I	33-2034 ♦	HP-1008
Millenia	2.3L V6 F/I	33-2672	HP-1010
Millenia	2.5L V6 F/I	33-2072	HP-1010
MPV	3.0L V6 F/I	33-2117	HP-1010
MPV I	3.0L V6 F/I	33-2117	HP-1010
MX-3	1.6L L4 F/I	33-2083	HP-1008
MX-3	1.8L V6 F/I	33-2083	
MX-5 I	1.8L L4 F/I	33-2676 ♦	
MX-6	2.0L L4 F/I	33-2049	HP-1006
MX-6	2.5L V6 F/I	33-2049 ♦	HP-1010
Protege	1.5L L4 F/I	33-2134	HP-1008
Protege	1.8L L4 F/I	33-2134	HP-1008
RX-7	1.3L R2 F/I	33-2017	HP-1008
RX-7 III	1.3L R2 F/I	33-2017	HP-1008
1994 MAZDA			
121 II	1.3L L4 F/I	E-9181	

Vehicle	Engine Type	Air Filter	Oil Filter
1994 MAZDA			
323	1.6L L4 F/I	33-2034	HP-1008
323 III	1.6L L4 F/I	33-2027	
323 IV	1.6L L4 F/I	33-2034	HP-1008
626	2.0L L4 F/I	33-2049	HP-1006
626	2.5L V6 F/I	33-2049	HP-1010
626 III	2.0L L4 F/I - 90/140BHP	33-2026	
626 IV	2.0L L4 F/I	33-2676	HP-1006
626 IV	2.5L V6 F/I	33-2049	HP-1010
B2300	2.3L L4 F/I	33-2024	HP-3001
B3000	3.0L V6 F/I	33-2024	HP-2009
B4000	4.0L V6 F/I	33-2024	HP-3001
Miata	1.8L L4 F/I	33-2034 ♦	HP-1008
MPV	3.0L V6 F/I	33-2117	HP-1010
MX-3	1.6L L4 F/I	33-2083 ♦	HP-1008
MX-3	1.8L V6 F/I	33-2083	HP-1010
MX-5 I	1.6L L4 F/I	33-2034 ♦	
MX-5 I	1.8L L4 F/I	33-2676 ♦	
MX-6	2.0L L4 F/I	33-2049	HP-1006
MX-6	2.5L V6 F/I	33-2049 ♦	HP-1010
Navajo	4.0L V6 F/I	33-2024	HP-3001
Protege	1.8L L4 F/I	33-2034	HP-1008
RX-7	1.3L R2 F/I	33-2017	HP-1008
RX-7 III	1.3L R2 F/I	33-2017	HP-1008
1993 MAZDA			
323 III	1.6L L4 F/I	33-2027	
323 IV	1.6L L4 F/I	33-2034	HP-1008
626	2.0L L4 F/I	33-2049	HP-1006
626	2.5L V6 F/I	33-2049	HP-1010
626 III	2.0L L4 F/I - 90/140BHP	33-2026	
626 IV	2.0L L4 F/I	33-2676	HP-1006
626 IV	2.5L V6 F/I	33-2049	HP-1010
929	3.0L V6 F/I	33-2050-1	HP-1010
B2200	2.2L L4 CARB	E-2790	HP-1006
B2200	2.2L L4 F/I	33-2117	HP-1006
B2600	2.6L L4 F/I	33-2117	HP-1010
Miata	1.6L L4 F/I	33-2034 ♦	HP-1008
MX-3	1.6L L4 F/I	33-2083 ♦	HP-1008
MX-3	1.8L V6 F/I	33-2083	HP-1010
MX-5 I	1.6L L4 F/I	33-2034	
MX-5 I	1.8L L4 F/I	33-2676 ♦	
MX-6	2.0L L4 F/I	33-2049	HP-1006
MX-6	2.5L V6 F/I	33-2049 ♦	HP-1010
Protege	1.8L L4 F/I	33-2034	HP-1008
RX-7	1.3L R2 F/I	33-2017	HP-1008
RX-7 III	1.3L R2 F/I	33-2017	HP-1008
1992 MAZDA			
323	1.6L L4 F/I	33-2034	HP-1008
323 III	1.6L L4 F/I	33-2027	
323 IV	1.6L L4 F/I	33-2034	HP-1008
323 IV	1.8L L4 F/I	33-2034 ♦	
929	3.0L V6 F/I	33-2050-1	HP-1010
B2200	2.2L L4 CARB	E-2790	HP-1006
B2200	2.2L L4 F/I	33-2117	HP-1006
B2600	2.6L L4 F/I	33-2117	HP-1010
Miata	1.6L L4 F/I	33-2034 ♦	HP-1008
MX-3	1.6L L4 F/I	33-2083 ♦	HP-1008
MX-3	1.8L V6 F/I	33-2083	HP-1010
MX-5 I	1.6L L4 F/I	33-2034	
MX-6	2.2L L4 F/I	33-2026	HP-1006
Navajo	4.0L V6 F/I	33-2024	HP-3001
Protege	1.8L L4 F/I	33-2034	HP-1008

*Indicates 2 filters required ♦ - Intake kit available - see page 80 Applications updated daily at knfilters.com

Vehicle	Engine Type	Air Filter	Oil Filter
1992 MAZDA			
RX-7 III	1.3L R2 F/I	33-2017	HP-1008
1991 MAZDA			
121 II	1.3L L4 F/I	E-9181	
323 IV	1.8L L4 F/I	33-2034 ♦	
323 SE	1.6L L4 F/I	E-9194	HP-1008
626	2.2L L4 F/I	33-2026	HP-1006
626 III	2.2L L4 F/I	33-2026	HP-1006
B2200	2.2L L4 CARB	E-2790	HP-1006
B2200	2.2L L4 F/I	33-2117	HP-1006
B2600	2.6L L4 F/I	33-2117	HP-1010
B-Series	2.6L L4 F/I - 122BHP	33-2117	
Miata	1.6L L4 F/I	33-2034 ♦	HP-1008
MX-5 I	1.6L L4 F/I	33-2034	
MX-6	2.2L L4 F/I	33-2026	HP-1006
Navajo	4.0L V6 F/I	33-2024	HP-3001
Protege	1.8L L4 F/I	33-2034	HP-1004
RX-7	1.3L R2 F/I	33-2017	HP-1004
RX-7 II	1.3L R2 F/I	33-2017	HP-1004
1990 MAZDA			
323	1.6L L4 F/I	33-2034	HP-1008
323 III	1.6L L4 F/I	33-2027	
323 IV	1.6L L4 F/I	33-2034	HP-1008
323 SE	1.6L L4 F/I	E-9194	HP-1008
626	2.2L L4 F/I	33-2026	HP-1010
626 III	2.2L L4 F/I	33-2026	HP-1010
B2200	2.2L L4 CARB	E-2790	HP-1006
B2200	2.2L L4 F/I	33-2117	HP-1006
B2600	2.6L L4 F/I	33-2117	HP-1010
Miata	1.6L L4 F/I	33-2034 ♦	HP-1008
MPV	2.6L L4 F/I		HP-1010
MX-5 I	1.6L L4 F/I	33-2034	
MX-6	2.2L L4 F/I	33-2026	HP-1006
Protege	1.8L L4 F/I	33-2034	HP-1004
RX-7	1.3L R2 F/I	33-2017	HP-1004
RX-7 II	1.3L R2 F/I	33-2017	HP-1004
1989 MAZDA			
323	1.6L L4 F/I	33-2027	HP-1004
323 III	1.6L L4 F/I	33-2027	HP-1004
323 IV	1.6L L4 F/I	33-2034	
626	2.2L L4 F/I	33-2026	HP-1010
626 III	2.0L L3 F/I - 90/140BHP	33-2026	
626 III	2.0L L4 CARB	E-2790	
626 III	2.2L L4 F/I	33-2026	HP-1010
B2200	2.2L L4 CARB	E-2790	HP-1010
B2600	2.6L L4 F/I	33-2117	HP-1004
MX-6	2.2L L4 F/I	33-2026	HP-1010
RX-7	1.3L R2 F/I	33-2017	HP-1004
RX-7 II	1.3L R2 F/I	33-2017	HP-1004
1988 MAZDA			
323	1.6L L4 F/I	33-2027	HP-1004
323 III	1.6L L4 F/I	33-2027	HP-1004
626	2.2L L4 F/I	33-2026	HP-1010
626 III	2.2L L4 F/I	33-2026	HP-1010
B2200	2.2L L4 CARB	E-2790	HP-1010
MX-6	2.2L L4 F/I	33-2026	HP-1010
RX-7	1.3L R2 F/I	33-2017	HP-1004
		33-2017 ♦	HP-1004
RX-7 II	1.3L R2 F/I	33-2017	HP-1004
1987 MAZDA			
B2000	2.0L L4 CARB	E-2790	HP-1010
B2200	2.2L L4 CARB	E-2790	HP-1010
1987 MAZDA			
B2600	2.6L L4 CARB	E-2810	HP-1005
RX-7	1.3L R2 F/I	33-2017	HP-1004
		33-2017 ♦	HP-1004
RX-7 II	1.3L R2 F/I	33-2017	HP-1004
1986 MAZDA			
B2000	2.0L L4 CARB	E-2790	HP-1010
RX-7	1.3L R2 F/I	33-2017	HP-1004
		33-2017 ♦	HP-1004
RX-7 II	1.3L R2 F/I	33-2017	HP-1004
1985 MAZDA			
RX-7	1.1L R2 CARB	E-2700	HP-1004
RX-7	1.3L R2 F/I	33-2016	HP-1004
RX-7 I	1.1L R2 CARB	E-2700	HP-1004
RX-7 II	1.3L R2 F/I	33-2017	HP-1004
1984 MAZDA			
B2000	2.0L L4 CARB	E-2790	
RX-7	1.1L R2 CARB	E-2700	HP-1004
RX-7	1.3L R2 F/I	33-2016	HP-1004
RX-7 I	1.1L R2 CARB	E-2700	
1983 MAZDA			
B2200	2.2L L4 DSL	E-2536	HP-2007
RX-7	1.1L R2 CARB	E-2700	HP-1004
RX-7 I	1.1L R2 CARB	E-2700	
1982 MAZDA			
B2200	2.2L L4 DSL	E-2536	HP-2007
RX-7	1.1L R2 CARB	E-2700	HP-1004
RX-7 I	1.1L R2 CARB	E-2700	
1980 MAZDA			
RX-7	1.1L R2 CARB	E-2700	HP-1004
RX-7 I	1.1L R2 CARB	E-2700	
1979 MAZDA			
RX-7	1.1L R2 CARB	E-2700	
RX-7 I	1.1L R2 CARB	E-2700	
1976 MAZDA			
RX-4	1.3L R2 CARB	E-2680	
1974 MAZDA			
RX-2	1.1L R2 CARB	E-2680	
1973 MAZDA			
RX-2	1.1L R2 CARB	E-2680	
1972 MAZDA			
RX-2	1.1L R2 CARB	E-2680	
2000 MBK			
125 XC Flame	125		KN-143
2012 MCLAREN			
MP4-12C	3.8L V8 F/I	E-0667	
2013 MERCEDES BENZ			
C180	1.6L L4 F/I	33-2965	
C250	1.8L L4 F/I	33-2965	
C350	3.5L V6 F/I	33-2985	
CLS63 AMG	5.5L V8 F/I	33-2474	
CLS550	4.6L V8 F/I	33-2474	
E350	3.5L V6 F/I	33-2985	
E550	4.6L V8 F/I	33-2474	
GL450	4.6L V8 F/I	33-2474	
GL550	4.6L V8 F/I	33-2474	
GLK350	3.5L V6 F/I	33-2985	
ML63 AMG	5.5L V8 F/I	33-2474	

*Indicates 2 filters required ♦ - Intake kit available - see page 80 Applications updated daily at knfilters.com

Vehicle	Engine Type	Air Filter	Oil Filter
2013 MERCEDES BENZ			
ML350	3.5L V6 F/I	33-2985	
SL63 AMG	5.5L V8 F/I	33-2474	
SL65 AMG	6.0L V12 F/I	33-2412	
SL550	4.6L V8 F/I	33-2474	
SLK250	1.8L L4 F/I	33-2965	
Sprinter	3.0L V6 DSL	33-2391	
2012 MERCEDES BENZ			
C63 AMG	6.3L V8 F/I	33-2405*	
C180 CGi	1.8L L4 F/I	33-2965	
C200 CGi	1.8L L4 F/I	33-2965	
C250	1.8L L4 F/I	33-2965	
C250 CGi	1.8L L4 F/I	33-2965	
CL63 AMG	5.5L V8 F/I	33-2474	
CL65 AMG	6.0L V12 F/I	33-2412	
CL550	4.6L V8 F/I	33-2474	
CLS63 AMG	5.5L V8 F/I	33-2474	
CLS500	4.7L V8 F/I	33-2474	
CLS550	4.6L V8 F/I	33-2474	
E63 AMG	5.5L V8 F/I	33-2474	
E250 CGI	1.8L L4 F/I	33-2965	
E300	3.5L V6 F/I	33-2985	
E500	4.7L V8 F/I	33-2474	
E550	4.6L V8 F/I	33-2474	
G500	5.5L V8 F/I	33-2181*	
GL450	4.0L V8 DSL	33-2973	
ML350	3.5L V6 F/I	33-2985	
S63 AMG	5.5L V8 F/I	33-2474	
S65 AMG	6.0L V12 F/I	33-2412	
S500	5.5L V8 F/I	33-2181*	
S550	4.6L V8 F/I	33-2474	
S600	5.5L V12 F/I	33-2412	
SL63 AMG	6.3L V8 F/I	33-2405*	
SLK250	1.8L L4 F/I	33-2965	
SLR McLaren	5.4L V8 F/I	33-2703*	
Sprinter 2500	3.0L V6 DSL	33-2391	
Sprinter 3500	3.0L V6 DSL	33-2391	
2011 MERCEDES BENZ			
B200	2.0L L4 F/I	33-2914	
C63 AMG	6.3L V8 F/I	33-2405*	
C180 CGi	1.8L L4 F/I	33-2965	
C200 CGi	1.8L L4 F/I	33-2965	
C250 CGi	1.8L L4 F/I	33-2965	
CL63 AMG	5.5L V8 F/I	33-2474	
CL550	4.6L V8 F/I	33-2474	
CLS63 AMG	6.3L V8 F/I	33-2405*	
E63 AMG	5.5L V8 F/I	33-2474	
E63 AMG	6.3L V8 F/I	33-2405*	
E200 CGI	1.8L L4 F/I	33-2965	
E250 CGI	1.8L L4 F/I	33-2965	
G500	5.5L V8 F/I	33-2181*	
GL350	3.0L V6 DSL - US	33-2940	
GL450	4.0L V8 DSL	33-2973	
ML63 AMG	6.3L V8 F/I	33-2405*	
ML350	3.0L V6 DSL - US	33-2940	
R350	3.0L V6 DSL - US	33-2940	
S63 AMG	5.5L V8 F/I	33-2474	
S65 AMG	6.0L V12 F/I	33-2412	
S500	5.5L V8 F/I	33-2181*	
S600	5.5L V12 F/I	33-2412	
SL63 AMG	6.3L V8 F/I	33-2405*	
SL65 AMG	6.0L V12 F/I	33-2412	
SLK200 Kompressor	1.8L L4 F/I - 171 Model	E-2011	
SLR McLaren	5.4L V8 F/I	33-2703*	

Vehicle	Engine Type	Air Filter	Oil Filter
2011 MERCEDES BENZ			
Sprinter 2500	3.0L V6 DSL	33-2391	
Sprinter 3500	3.0L V6 DSL	33-2391	
2010 MERCEDES BENZ			
B200	2.0L L4 DSL	33-2915	
B200	2.0L L4 F/I	33-2914	
C63 AMG	6.3L V8 F/I	33-2405*	
C200 Kompressor	1.8L L4 F/I	E-2011	
C250 CGi	1.8L L4 F/I	33-2965	
CL63 AMG	6.3L V8 F/I	33-2405*	
CL65 AMG	6.0L V12 F/I	33-2412	
CL500	5.5L V8 F/I	33-2181*	
CLK63 AMG	6.3L V8 F/I	33-2405*	
CLS63 AMG	6.3L V8 F/I	33-2405*	
E63 AMG	6.3L V8 F/I	33-2405*	
E320	3.0L V6 DSL	33-2940	
E500	5.5L V8 F/I	33-2181*	
G500	5.5L V8 F/I	33-2181*	
GL350	3.0L V6 DSL - US	33-2940	
GL450	4.0L V8 DSL	33-2973	
GL500	5.5L V8 F/I	33-2181*	
ML63 AMG	6.3L V8 F/I	33-2405*	
ML350	3.0L V6 DSL - US	33-2940	
R63 AMG	6.3L V8 F/I	33-2405*	
S63 AMG	6.2L V8 F/I	33-2405*	
S65 AMG	6.0L V12 F/I	33-2412	
SL63 AMG	6.3L V8 F/I	33-2405*	
SL65 AMG	6.0L V12 F/I	33-2412	
SLK55 AMG	5.5L V8 F/I	33-2181*	
SLR McLaren	5.4L V8 F/I	33-2703*	
Sprinter	3.0L V6 DSL	33-2391	
Sprinter	3.5L V6 F/I	33-2391	
Viano	2.2L L4 DSL	33-2912	
Viano	3.5L V6 F/I	33-2912	
Vito	2.2L L4 DSL	33-2912	
Vito	3.5L V6 F/I	33-2912	
2009 MERCEDES BENZ			
B200	2.0L L4 DSL	33-2915	
B200	2.0L L4 F/I	33-2914	
C63 AMG	6.3L V8 F/I	33-2405*	
C250 CGi	1.8L L4 F/I	33-2965	
C320	3.0L V6 DSL	33-2940	
C350	3.0L V6 DSL	33-2940	
CL63 AMG	6.3L V8 F/I	33-2405*	
CLC180 Kompressor	1.8L L4 F/I	E-2011	
CLC350	3.5L V6 F/I	33-2181*	
CLS63 AMG	6.3L V8 F/I	33-2405*	
E63 AMG	6.3L V8 F/I	33-2405*	
E300	3.0L L6 DSL	33-2940	
E320	3.0L V6 DSL	33-2940	
E350	3.0L V6 DSL	33-2940	
GL320	3.0L V6 DSL	33-2940	
GL450	4.0L V8 DSL	33-2973	
GLK350	3.5L V6 F/I	33-2181*	
ML63 AMG	6.3L V8 F/I	33-2405*	
ML320	3.0L V6 DSL	33-2940	
ML350	3.0L V6 DSL	33-2940	
R320	3.0L V6 DSL	33-2940	
S63 AMG	6.2L V8 F/I	33-2405*	
S450	4.7L V8 F/I	33-2181*	
SL63 AMG	6.3L V8 F/I	33-2405*	
SL65 AMG	6.0L V12 F/I	33-2412	
SL500	5.5L V8 F/I	33-2181*	
SLK55 AMG	5.5L V8 F/I	33-2181*	

*Indicates 2 filters required ♦ - Intake kit available - see page 80 Applications updated daily at knfilters.com

Vehicle	Engine Type	Air Filter	Oil Filter
2009 MERCEDES BENZ			
SLK200 Kompressor	1.8L L4 F/I	E-2011	
Viano	3.0L V6 F/I	33-2766	
Viano	3.5L V6 F/I	33-2912	
Vito	3.0L V6 F/I	33-2912	
2008 MERCEDES BENZ			
B200	2.0L L4 DSL	33-2915	
B200	2.0L L4 F/I	33-2914	
C63 AMG	6.3L V8 F/I	33-2405*	
C220	2.2L L4 DSL	E-2018	
C280	3.0L V6 DSL	33-2940	
C280	3.0L V6 F/I	33-2181*	
C320	3.0L V6 DSL	33-2940	
CL63 AMG	6.3L V8 F/I	33-2405*	
CL65 AMG	6.0L V12 F/I	33-2412	
CLK63 AMG	6.3L V8 F/I	33-2405*	
CLK320	3.0L V6 DSL	33-2940	
CLK500	5.0L V8 F/I	33-2181*	
CLS55 AMG	5.5L V8 F/I	33-2181*	
CLS63 AMG	6.3L V8 F/I	33-2405*	
CLS500	5.5L V8 F/I	33-2181*	
E63 AMG	6.3L V8 F/I	33-2405*	
E300	3.0L L6 DSL	33-2940	
E320	3.0L V6 DSL	33-2940	
GL320	3.0L V6 DSL	33-2940	
ML63 AMG	6.3L V8 F/I	33-2405*	
ML320	3.0L V6 DSL	33-2940	
R320	3.0L V6 DSL	33-2940	
S63 AMG	6.2L V8 F/I	33-2405*	
S63 AMG	6.3L V8 F/I	33-2405*	
S65 AMG	6.0L V12 F/I	33-2412	
S450	4.7L V8 F/I	33-2181*	
S500	5.5L V8 F/I	33-2181*	
SL63 AMG	6.3L V8 F/I	33-2405*	
SL500	5.0L V8 F/I	33-2181*	
SLK55 AMG	5.5L V8 F/I	33-2181*	
Sprinter	3.0L V6 DSL	33-2391	
Sprinter	3.5L V6 F/I	33-2391	
2007 MERCEDES BENZ			
B200	2.0L L4 DSL	33-2915	
B200	2.0L L4 F/I	33-2914	
C63 AMG	6.3L V8 F/I	33-2405*	
C160 Kompressor	1.8L L4 F/I	E-2011	
C200 Kompressor	1.8L L4 F/I	E-2011	
C280	3.0L V6 DSL	33-2940	
C320	3.0L V6 DSL	33-2940	
CL63 AMG	6.3L V8 F/I	33-2405*	
CL600	5.5L V12 F/I	33-2412	
CLK63 AMG	6.3L V8 F/I	33-2405*	
CLK200 Kompressor	1.8L L4 F/I	E-2011	
CLK500	5.0L V8 F/I	33-2181*	
CLK500	5.5L V8 F/I	33-2181*	
CLS55 AMG	5.5L V8 F/I	33-2181*	
CLS63 AMG	6.3L V8 F/I	33-2405*	
CLS350	3.5L V6 F/I	33-2181*	
CLS500	5.0L V8 F/I	33-2181*	
E63 AMG	6.3L V8 F/I	33-2405*	
E320	3.0L V6 DSL	33-2940	
GL320	3.0L V6 DSL	33-2940	
ML63 AMG	6.3L V8 F/I	33-2405*	
ML320	3.0L V6 DSL	33-2940	
R320	3.0L V6 DSL	33-2940	
S63 AMG	6.2L V8 F/I	33-2405*	
S500	5.5L V8 F/I	33-2181*	
2007 MERCEDES BENZ			
S600	5.5L V12 F/I	33-2412	
SL500	5.0L V8 F/I	33-2181*	
SL500	5.5L V8 F/I	33-2181*	
SL600	5.5L V12 F/I	33-2412	
SLK55 AMG	5.5L V8 F/I	33-2181*	
Sprinter	3.0L V6 DSL	33-2391	
Sprinter	3.5L V6 F/I	33-2391	
2006 MERCEDES BENZ			
B200	2.0L L4 DSL	33-2915	
B200	2.0L L4 F/I	33-2914	
C180 Kompressor	1.8L L4 F/I	E-2011	
C280	3.0L V6 DSL	33-2940	
C320	3.0L V6 DSL	33-2940	
CLK500	5.5L V8 F/I	33-2181*	
CLS500	5.5L V8 F/I	33-2181*	
E63 AMG	6.3L V8 F/I	33-2405*	
E280	3.0L V6 DSL	33-2940	
E320	3.0L V6 DSL	33-2940	
E320	3.2L L6 DSL		HP-7017
E320	3.2L V6 F/I	33-2181*	
ML63 AMG	6.3L V8 F/I	33-2405*	
ML320	3.0L V6 DSL	33-2940	
S65 AMG	6.0L V12 F/I	33-2412	
S500	5.5L V8 F/I	33-2181*	
S600	5.5L V12 F/I	33-2412	
SL65 AMG	6.0L V12 F/I	33-2412	
SL500	5.5L V8 F/I	33-2181*	
SL600	5.5L V12 F/I	33-2412	
SLK200 Kompressor	1.8L L4 F/I	E-2011	
Sprinter	2.7L L5 DSL	33-2764	
Vito	2.2L L4 DSL	33-2912	
2005 MERCEDES BENZ			
A200	2.0L L4 F/I	33-2914	
C32 AMG	3.2L V6 F/I	33-2256*	
C180 Kompressor	1.8L L4 F/I	E-2011	
C230	1.8L L4 F/I	E-2011	
C230	2.5L V6 F/I	33-2181*	
C230 Kompressor	1.8L L4 F/I	E-2011	
C280	3.0L V6 F/I	33-2181*	
C320	3.0L V6 DSL	33-2940	
C350	3.5L V6 F/I	33-2181*	
CL65 AMG	6.0L V12 F/I	33-2412	
CLK DTM AMG	5.5L V8 F/I	33-2181*	
CLK320	3.0L V6 DSL	33-2940	
CLK350	3.5L V6 F/I	33-2181*	
CLS55 AMG	5.5L V8 F/I	33-2181*	
CLS500	5.0L V8 F/I	33-2181*	
E320	3.0L V6 DSL - from 5/05	33-2940	
E320	3.2L L6 DSL		HP-7017
E350	3.5L V6 F/I	33-2181*	
ML320	3.0L V6 DSL	33-2940	
ML350	3.5L V6 F/I	33-2181*	
S55 AMG	5.4L V8 F/I	33-2181*	
S55 AMG Kompressor	5.4L V8 F/I	33-2181*	
S65 AMG	6.0L V12 F/I	33-2412	
SL65 AMG	6.0L V12 F/I	33-2412	
SL600	5.5L V12 F/I	33-2412	
SLK280	3.0L V6 F/I	33-2181*	
Sprinter	2.7L L5 DSL	33-2764	
Vito	2.2L L4 DSL	33-2912	

*Indicates 2 filters required ♦ - Intake kit available - see page 80 Applications updated daily at knfilters.com

Vehicle	Engine Type	Air Filter	Oil Filter
2004 MERCEDES BENZ			
C55 AMG	5.5L V8 F/I	33-2181*	
C220	2.2L L4 DSL	E-2018	
C230	1.8L L4 F/I	E-2011	
C230 Kompressor	1.8L L4 F/I	E-2011	
CL600	5.5L V12 F/I	33-2412	
E200 Kompressor	1.8L L4 F/I	E-2011	
E240	2.6L V6 F/I	33-2181*	
E320	3.2L L6 DSL	E-2992	HP-7017
S55 AMG	5.4L V8 F/I	33-2181*	
S55 AMG Kompressor	5.4L V8 F/I	33-2181*	
S320	3.2L L6 F/I	33-2181*	
S600	5.5L V12 F/I	33-2412	
SL600	5.5L V12 F/I	33-2412	
SLK55 AMG	5.5L V8 F/I	33-2181*	
SLK200 Kompressor	2.0L L4 F/I	33-2767	
SLK230	2.3L L4 F/I	33-2767	HP-7008
Sprinter	2.7L L5 DSL	33-2764	
Vito	2.0L L4 DSL	33-2912	
2003 MERCEDES BENZ			
C230	1.8L L4 F/I	E-2011	
C230 Kompressor	1.8L L4 F/I	E-2011	
CL55 AMG	5.4L V8 F/I - Non-US	33-2181*	
CL55 AMG	5.5L V8 F/I - Non-US	33-2181*	
CL600	5.5L V12 F/I	33-2412	
E320	3.2L L6 DSL	E-2992	
G55 AMG	5.5L V8 F/I - Non-US	33-2181*	
S55 AMG	5.4L V8 F/I	33-2181*	
S55 AMG Kompressor	5.4L V8 F/I	33-2181*	
S350	3.7L V6 F/I	33-2181*	
S600	5.5L V12 F/I	33-2412	
SLK230	2.3L L4 F/I	33-2767	HP-7008
Sprinter	2.7L L5 DSL	33-2764	
2002 MERCEDES BENZ			
C180	2.0L L4 F/I	33-2244	
C200 Kompressor	2.0L L4 F/I	33-2193	
C230	2.3L L4 F/I	33-2193	HP-7008
C230 Kompressor	1.8L L4 F/I - from 6/02	E-2011	
C230 Kompressor	1.8L L4 F/I - to 5/02	33-2193	
CL600	5.5L V12 F/I - from 10/02	33-2412	
CLK230 Kompressor	2.3L L4 F/I	33-2703	
CLK270	2.7L L5 DSL	33-2856	
E320	3.2L L6 DSL - 197BHP	33-2158	
E320	3.2L L6 DSL - 204BHP	E-2992	
G55 AMG	5.5L V8 F/I	33-2181*	
ML350	3.7L V6 F/I	33-2703	
S55 AMG	5.4L V8 F/I	33-2181*	
S55 AMG Kompressor	5.4L V8 F/I	33-2181*	
SLK200 Kompressor	2.0L L4 F/I	33-2767	
SLK230	2.3L L4 F/I	33-2767	HP-7008
V280	2.8L V6 F/I	33-2766	
Vito	2.0L L4 F/I	33-2766	
2001 MERCEDES BENZ			
A160	1.6L L4 F/I	E-9242 ♦	
C180	2.0L L4 F/I	33-2244	
CLK230 Kompressor	2.3L L4 F/I	33-2703	
E320	3.2L L6 DSL	33-2158	
S55 AMG	5.4L V8 F/I	33-2181*	
S55 AMG Kompressor	5.4L V8 F/I	33-2181*	
S280	2.8L V6 F/I	33-2181*	

Vehicle	Engine Type	Air Filter	Oil Filter
2001 MERCEDES BENZ			
S320	3.2L L6 F/I	33-2181*	
SL320	3.2L L6 F/I - 224BHP	33-2181*	
SL600	6.0L V12 F/I - Non-US	33-2677*	
SL600	6.0L V12 F/I - US	33-2217*	
SLK200 Kompressor	2.0L L4 F/I	33-2767	
SLK230	2.3L L4 F/I	33-2767	HP-7008
2000 MERCEDES BENZ			
A160	1.6L L4 F/I	E-9242 ♦	
C200 Kompressor	2.0L L4 F/I - 163BHP	33-2193	
C230	2.3L L4 F/I	33-2703	HP-7008
C230 Kompressor	2.3L L4 F/I	33-2703	HP-7008
C240	2.6L V6 F/I	33-2181*	
C250	2.5L L5 DSL	33-2703	
C320	3.2L V6 F/I	33-2181*	
CL55 AMG	5.4L V8 F/I	33-2181*	
E320	3.2L L6 DSL	33-2158	
G55 AMG	5.5L V8 F/I	33-2181*	
G500	5.0L V8 F/I	33-2181*	
ML230	2.3L L4 F/I	33-2703	
S55 AMG	5.4L V8 F/I	33-2181*	
SL600	6.0L V12 F/I - Non-US	33-2677*	
SLK200 Kompressor	2.0L L4 F/I	33-2767	
SLK230	2.3L L4 F/I	33-2767	HP-7008
SLK320	3.2L V6 F/I	33-2185*	
1999 MERCEDES BENZ			
A140	1.4L L4 F/I	E-9242 ♦	
C230	2.3L L4 F/I	33-2703	HP-7008
C230 Kompressor	2.3L L4 F/I	33-2703	HP-7008
C250	2.5L L5 DSL	33-2703	
CL500	5.0L V8 F/I	33-2181*	
CL500	5.0L V8 F/I - Non-US, 306BHP	33-2181*	
CL500	5.0L V8 F/I - Non-US, 320BHP	33-2678*	
CLK230 Kompressor	2.3L L4 F/I	33-2703	
E300	3.0L L6 DSL - Non-US	33-2747	
E320	3.2L L6 DSL	33-2158	
ML230	2.3L L4 F/I	33-2703	
S55 AMG	5.4L V8 F/I	33-2181*	
S320	3.2L L6 F/I		HP-7008
S320	3.2L L6 F/I - Non-US, from 10/98	33-2181*	HP-7008
S320	3.2L L6 F/I - Non-US, to 9/98	33-2130	HP-7008
S320	3.2L L6 F/I - US	33-2130	HP-7008
S430	4.3L V8 F/I	33-2181*	
S500	5.0L V8 F/I	33-2678*	
SL600	6.0L V12 F/I - Non-US	33-2677*	
SLK200 Kompressor	2.0L L4 F/I	33-2767	
SLK230	2.3L L4 F/I	33-2767	HP-7008
V230	2.0L L4 F/I	33-2766	
1998 MERCEDES BENZ			
C230	2.3L L4 F/I	33-2703 ♦	HP-7008
C230 Kompressor	2.3L L4 F/I	33-2703	HP-7008
CL500	5.0L V8 F/I - Non-US	33-2678*	
CL600	6.0L V12 F/I - Non-US	33-2217*	
CLK230 Kompressor	2.3L L4 F/I	33-2703	
E300	3.0L L6 DSL - Non-US	33-2747	
E320	3.2L L6 F/I - Non-US, W/S124	33-2705	
E320	3.2L L6 F/I - Non-US, W/S210	33-2747	
S320	3.2L L6 F/I	33-2130	HP-7008
S420	4.2L V8 F/I - Non-US	33-2678*	
S430	4.3L V8 F/I	33-2181*	

*Indicates 2 filters required ♦ - Intake kit available - see page 80 Applications updated daily at knfilters.com

Vehicle	Engine Type	Air Filter	Oil Filter
1998 MERCEDES BENZ			
S500	5.0L V8 F/I - Non-US, 306BHP	33-2181*	
S500	5.0L V8 F/I - Non-US, 320BHP	33-2678*	
SL500	5.0L V8 F/I - Non-US, 306BHP	33-2181*	
SL500	5.0L V8 F/I - Non-US, 320BHP	33-2678*	
SL600	6.0L V12 F/I - Non-US	33-2677*	
SLK200 Kompressor	2.0L L4 F/I	33-2767	
SLK230	2.3L L4 F/I	33-2767	HP-7008
1997 MERCEDES BENZ			
C36 AMG	3.6L L6 F/I	33-2703	HP-7008
C180	1.8L L4 F/I	33-2703	
C230	2.3L L4 F/I	33-2703 ♦	HP-7008
C230 Kompressor	2.3L L4 F/I	33-2703	HP-7008
C280	2.8L L6 F/I	33-2703	HP-7008
CLK200	2.0L L4 F/I	33-2703 ♦	
E36 AMG	3.6L L6 F/I	33-2747	
E55 AMG	5.5L V8 F/I	33-2747*	
E300	3.0L L6 DSL - Non-US	33-2747	
E320	3.2L L6 F/I		HP-7008
E320	3.2L L6 F/I - Non-US, W/S124	33-2705	HP-7008
E320	3.2L L6 F/I - Non-US, W/S210	33-2747	HP-7008
E320	3.2L L6 F/I - US	33-2747	HP-7008
E420	4.2L V8 F/I	33-2747	
S320	3.2L L6 F/I	33-2130	HP-7008
S500	5.0L V8 F/I	33-2678*	
S600	6.0L V12 F/I	33-2677*	
SL320	3.2L L6 F/I		HP-7008
SL320	3.2L L6 F/I - Non-US	33-2765	HP-7008
SL500	5.0L V8 F/I	33-2678*	
SL600	6.0L V12 F/I	33-2677*	
SLK200 Kompressor	2.0L L4 F/I	33-2767	
SLK230	2.3L L4 F/I	33-2767	
1996 MERCEDES BENZ			
C36 AMG	3.6L L6 F/I	33-2703	HP-7008
C220	2.2L L4 DSL	33-2703	
C220	2.2L L4 F/I	33-2703	HP-7008
C230	2.3L L4 F/I	33-2703 ♦	
C230 Kompressor	2.3L L4 F/I	33-2703	
C280	2.8L L6 F/I	33-2703	HP-7008
E300	3.0L L6 DSL - Non-US	33-2747	
E320	3.2L L6 F/I		HP-7008
E320	3.2L L6 F/I - Non-US, W/S124	33-2705	HP-7008
E320	3.2L L6 F/I - Non-US, W/S210	33-2747	HP-7008
E320	3.2L L6 F/I - US	33-2747	HP-7008
S300	3.0L L6 DSL	33-2701	
S320	3.2L L6 F/I	33-2130	HP-7008
S350	3.4L L6 DSL	33-2701	
S420	4.2L V8 F/I	33-2678*	
S500	5.0L V8 F/I	33-2678*	
S600	6.0L V12 F/I	33-2677*	
SL320	3.2L L6 F/I		HP-7008
SL320	3.2L L6 F/I - Non-US	33-2765	HP-7008
SL500	5.0L V8 F/I	33-2678*	
SL600	6.0L V12 F/I	33-2677*	
1995 MERCEDES BENZ			
C36 AMG	3.6L L6 F/I	33-2703	HP-7008
C220	2.2L L4 DSL	33-2703	
C220	2.2L L4 F/I	33-2703	HP-7008
C250	2.5L L5 DSL	33-2703	
1995 MERCEDES BENZ			
C280	2.8L L6 F/I	33-2703	HP-7008
E220	2.2L L4 F/I	33-2704	
E300	3.0L L6 DSL - Non-US	33-2747	
E320	3.2L L6 F/I		HP-7008
E320	3.2L L6 F/I - Non-US, W/S124	33-2705	HP-7008
E320	3.2L L6 F/I - Non-US, W/S210	33-2747	HP-7008
E320	3.2L L6 F/I - US	33-2705	HP-7008
E420	4.2L V8 F/I	33-2678*	
S320	3.2L L6 F/I	33-2130	HP-7008
S420	4.2L V8 F/I	33-2678*	
S500	5.0L V8 F/I	33-2678*	
S600	6.0L V12 F/I	33-2677*	
SL320	3.2L L6 F/I		HP-7008
SL320	3.2L L6 F/I - Non-US	33-2765	HP-7008
SL500	5.0L V8 F/I	33-2678*	
SL600	6.0L V12 F/I	33-2677*	
1994 MERCEDES BENZ			
C220	2.2L L4 DSL	33-2703	
C220	2.2L L4 F/I	33-2703	HP-7008
C280	2.8L L6 F/I	33-2703	HP-7008
E200	2.0L L4 F/I	33-2704	
E220	2.2L L4 F/I	33-2704	
E320	3.2L L6 F/I	33-2705	HP-7008
E420	4.2L V8 F/I	33-2678*	
E500	5.0L V8 F/I	33-2678*	
S320	3.2L L6 F/I	33-2130	HP-7008
S350	3.4L L6 DSL	33-2701	
S420	4.2L V8 F/I	33-2678*	
S500	5.0L V8 F/I	33-2678*	
S600	6.0L V12 F/I	33-2677*	
SL320	3.2L L6 F/I		HP-7008
SL320	3.2L L6 F/I - Non-US	33-2765	HP-7008
SL500	5.0L V8 F/I	33-2678*	
SL600	6.0L V12 F/I	33-2677*	
1993 MERCEDES BENZ			
190E	2.3L L4 F/I	E-9178	HP-2005
190E	2.6L L6 F/I	E-2866	HP-2005
300CE	3.2L L6 F/I		HP-7008
300CE	3.2L L6 F/I - US	E-9179	HP-7008
300D	2.5L L5 DSL	33-2702	
300E	2.8L L6 F/I		HP-7008
300E	3.0L L6 F/I		HP-2005
300E	3.0L L6 F/I - Non-US, 220BHP	E-9179	HP-2005
300E	3.0L L6 F/I - Non-US, Exc., 220BHP	E-2867	HP-2005
300E	3.0L L6 F/I - US	E-2867	HP-2005
300E	3.2L L6 F/I		HP-7008
300SE	3.2L L6 F/I		HP-7008
300SL	3.0L L6 F/I - Non-US, 190BHP	E-2867	
400E	4.2L V8 F/I	33-2678*	
500E	5.0L V8 F/I	33-2678*	
500SEL	5.0L V8 F/I	33-2678*	
500SL	5.0L V8 F/I	33-2678*	
S320	3.2L L6 F/I	33-2130	
S600	6.0L V12 F/I	33-2677*	
1992 MERCEDES BENZ			
190E	2.3L L4 F/I	E-9178	HP-2005
190E	2.6L L6 F/I	E-2866	HP-2005
300CE	3.0L L6 F/I		HP-7008
300CE	3.0L L6 F/I - Non-US, 220BHP	E-9179	HP-7008

*Indicates 2 filters required ♦ - Intake kit available - see page 80 Applications updated daily at knfilters.com

1992 MERCEDES BENZ

Vehicle	Engine Type	Air Filter	Oil Filter
300CE	3.0L L6 F/I - Non-US, Exc., 220BHP	E-2867	HP-7008
300CE	3.0L L6 F/I - US	E-9179	HP-7008
300D	2.5L L5 DSL	33-2702	
300E	2.6L L6 F/I	E-2867	HP-2005
300E	3.0L L6 F/I		HP-2005
300E	3.0L L6 F/I - Non-US, 220BHP	E-9179	HP-2005
300E	3.0L L6 F/I - Non-US, Exc., 220BHP	E-2867	HP-2005
300E	3.0L L6 F/I - US	E-2867	HP-2005
300SL	3.0L L6 F/I		HP-7008
300SL	3.0L L6 F/I - Non-US, 190BHP	E-2867	HP-7008
300SL	3.0L L6 F/I - Non-US, 231BHP	E-9179	HP-7008
300SL	3.0L L6 F/I - US	E-9179	HP-7008
300TE	3.0L L6 F/I	E-2867	HP-2005
300TE	3.0L L6 F/I - Non-US, 220BHP	E-9179	HP-2005
300TE	3.0L L6 F/I - Non-US, Exc., 220BHP	E-2867	HP-2005
400E	4.2L V8 F/I	33-2678*	
400SE	4.2L V8 F/I	33-2678*	
400SEL	4.2L V8 F/I	33-2678*	
500E	5.0L V8 F/I	33-2678*	
500SEL	5.0L V8 F/I	33-2678*	
500SL	5.0L V8 F/I	33-2683*	
500SL	5.0L V8 F/I - KE Jetronic	33-2683*	
500SL	5.0L V8 F/I - LH Jetronic	33-2678*	
600SEL	6.0L V12 F/I	33-2677*	
SL600	6.0L V12 F/I	33-2677*	

1991 MERCEDES BENZ

Vehicle	Engine Type	Air Filter	Oil Filter
190E	2.0L L4 F/I	E-9178	
190E	2.3L L4 F/I	E-9178	HP-2005
190E	2.6L L6 F/I	E-2866	HP-2005
230E	2.3L L4 F/I	E-9178	
300CE	3.0L L6 F/I		HP-7008
300CE	3.0L L6 F/I - Non-US, 220BHP	E-9179	HP-7008
300CE	3.0L L6 F/I - Non-US, Exc., 220BHP	E-2867	HP-7008
300CE	3.0L L6 F/I - US	E-9179	HP-7008
300D	2.5L L5 DSL	33-2702	
300E	2.6L L6 F/I	E-2867	HP-2005
300E	3.0L L6 F/I		HP-2005
300E	3.0L L6 F/I - Non-US, 220BHP	E-9179	HP-2005
300E	3.0L L6 F/I - Non-US, Exc., 220BHP	E-2867	HP-2005
300E	3.0L L6 F/I - US	E-2867	HP-2005
300SE	3.0L L6 F/I	E-2867	HP-2005
300SEL	3.0L L6 F/I	E-2867	HP-2005
300SL	3.0L L6 F/I - Non-US, 190BHP	E-2867	
300TE	3.0L L6 F/I	E-2867	HP-2005
300TE	3.0L L6 F/I - Non-US, Exc., 220BHP	E-2867	HP-2005
350SD	3.5L L6 DSL - Turbo	E-9165	
350SDL	3.5L L6 DSL - Turbo	E-9165	
420SEL	4.2L V8 F/I	E-2872	
500SL	5.0L V8 F/I	33-2683*	
500SL	5.0L V8 F/I - KE Jetronic	33-2683*	
500SL	5.0L V8 F/I - LH Jetronic	33-2678*	
560SEC	5.6L V8 F/I	E-2872	
560SEL	5.6L V8 F/I	E-2872	
600SE	6.0L V12 F/I	33-2677*	

1991 MERCEDES BENZ

Vehicle	Engine Type	Air Filter	Oil Filter
600SEL	6.0L V12 F/I	33-2677*	

1990 MERCEDES BENZ

Vehicle	Engine Type	Air Filter	Oil Filter
190E	2.3L L4 F/I	E-9178	HP-2005
190E	2.6L L6 F/I	E-2866	HP-2005
230E	2.3L L4 F/I	E-9178	
300CE	3.0L L6 F/I - Non-US, 220BHP	E-9179	
300CE	3.0L L6 F/I - Non-US, Exc., 220BHP	E-2867	
300CE	3.0L L6 F/I - US	E-9179	
300D	2.5L L5 DSL	33-2702	
300E	2.6L L6 F/I	E-2867	HP-2005
300E	3.0L L6 F/I		HP-2005
300E	3.0L L6 F/I - Non-US, 220BHP	E-9179	HP-2005
300E	3.0L L6 F/I - Non-US, Exc., 220BHP	E-2867	HP-2005
300E	3.0L L6 F/I - US	E-2867	HP-2005
300SE	3.0L L6 F/I	E-2867	HP-2005
300SEL	3.0L L6 F/I	E-2867	HP-2005
300SL	3.0L L6 F/I - Non-US, 190BHP	E-2867	
300SL	3.0L L6 F/I - Non-US, 231BHP	E-9179	
300SL	3.0L L6 F/I - US	E-9179	
420SEL	4.2L V8 F/I	E-2872	
500SL	5.0L V8 F/I	33-2683*	
500SL	5.0L V8 F/I - KE Jetronic	33-2683*	
500SL	5.0L V8 F/I - LH Jetronic	33-2678*	
560SEC	5.6L V8 F/I	E-2872	
560SEL	5.6L V8 F/I	E-2872	

1989 MERCEDES BENZ

Vehicle	Engine Type	Air Filter	Oil Filter
190E	2.0L L4 F/I	E-9178	HP-2005
190E	2.6L L6 F/I	E-2866	HP-2005
230E	2.3L L4 F/I	E-9178	
260E	2.6L L6 F/I	E-2867	HP-2005
300E	3.0L L6 F/I		HP-2005
300E	3.0L L6 F/I - Non-US, 220BHP	E-9179	HP-2005
300E	3.0L L6 F/I - Non-US, Exc., 220BHP	E-2867	HP-2005
300E	3.0L L6 F/I - US	E-2867	HP-2005
300SE	3.0L L6 F/I	E-2867	HP-2005
300SEL	3.0L L6 F/I	E-2867	HP-2005
560SEC	5.6L V8 F/I	E-2872	
560SEL	5.6L V8 F/I	E-2872	
560SL	5.6L V8 F/I	E-2872	

1988 MERCEDES BENZ

Vehicle	Engine Type	Air Filter	Oil Filter
190E	2.3L L4 F/I		HP-2005
190E	2.3L L4 F/I - Non-US, DOHC, To 9/88	33-2513	HP-2005
190E	2.3L L4 F/I - Non-US, From 10/88	E-9178	HP-2005
190E	2.3L L4 F/I - Non-US, SOHC, To 9/88	E-2865	HP-2005
190E	2.3L L4 F/I - US	E-9178	HP-2005
200E	2.0L L4 F/I	E-9178	
260E	2.6L L6 F/I	E-2867	HP-2005
300CE	3.0L L6 F/I	E-2867	HP-2005
300E	3.0L L6 F/I		HP-2005
300E	3.0L L6 F/I - Non-US, 220BHP	E-9179	HP-2005
300E	3.0L L6 F/I - Non-US, Exc., 220BHP	E-2867	HP-2005
300E	3.0L L6 F/I - US	E-2867	HP-2005
300SEL	3.0L L6 F/I	E-2867	HP-2005

*Indicates 2 filters required ♦ - Intake kit available - see page 80 Applications updated daily at knfilters.com

Vehicle	Engine Type	Air Filter	Oil Filter
1988 MERCEDES BENZ			
300TE	3.0L L6 F/I - Non-US, Exc., 220BHP	E-2867	
300TE	3.0L L6 F/I - US	E-2867	
420SEL	4.2L V8 F/I	E-2872	
500SL	5.0L V8 F/I	E-2872	
560SEC	5.6L V8 F/I	E-2872	
560SEL	5.6L V8 F/I	E-2872	
560SL	5.6L V8 F/I	E-2872	
1987 MERCEDES BENZ			
190D	2.5L L5 DSL - exc. Turbo	33-2549	
190D	2.5L L5 DSL - Turbo	33-2702	
190E	2.3L L4 F/I - DOHC	33-2513	
190E	2.3L L4 F/I - SOHC	E-2865	HP-2005
190E	2.6L L6 F/I	E-2866	HP-2005
300D	3.0L L6 DSL - Non-US, w/EGR Valve	33-2549	
300D	3.0L L6 DSL - Non-US, w/o EGR Valve	33-2642	
300D	3.0L L6 DSL - US	E-9165	
300E	3.0L L6 F/I	E-2867	HP-2005
300SDL	3.0L L6 DSL	E-9165	
300TD	3.0L L6 DSL	E-9165	
420SEL	4.2L V8 F/I	E-2872	
560SEC	5.6L V8 F/I	E-2872	
560SEL	5.6L V8 F/I	E-2872	
560SL	5.6L V8 F/I	E-2872	
1986 MERCEDES BENZ			
190D	2.0L L4 DSL	33-2561	
190D	2.5L L5 DSL	33-2549	
190E	2.3L L4 F/I - DOHC	33-2513	
190E	2.3L L4 F/I - SOHC	E-2865	HP-2005
260E	2.6L L6 F/I	E-2867	
300D	3.0L L6 DSL - w/EGR Valve	33-2549	
300E	3.0L L6 F/I	E-2867	HP-2005
300SDL	3.0L L6 DSL	E-9165	
420SE	4.2L V8 F/I	E-2872	
420SEC	4.2L V8 F/I	E-2872	
420SEL	4.2L V8 F/I	E-2872	
560SL	5.6L V8 F/I	E-2872	
1985 MERCEDES BENZ			
190D	2.2L L4 DSL	33-2561	
190E	2.0L L4 F/I	E-2865	
190E	2.3L L4 F/I	E-2865	HP-2005
230CE	2.3L L4 F/I	E-2865	
280CE	2.8L L6 F/I	E-9166	
300CD	3.0L L5 DSL - exc. Calif	E-2870	
300D	3.0L L5 DSL - exc. Calif	E-2870	
300D	3.0L L6 DSL - w/EGR Valve	33-2549	
300D	3.0L L6 DSL - w/o EGR Valve	33-2642	
300SD	3.0L L5 DSL	E-2870	
300SE	3.0L L6 F/I	E-2867	
300SEL	3.0L L6 F/I	E-2867	
300SL	3.0L L6 F/I	E-2866	
300TD	3.0L L5 DSL	E-2870	
380SL	3.8L V8 F/I	E-2872	
500SEC	5.0L V8 F/I	E-2872	
500SEL	5.0L V8 F/I	E-2872	
560SEC	5.6L V8 F/I	E-2872	
560SEL	5.6L V8 F/I	E-2872	

Vehicle	Engine Type	Air Filter	Oil Filter
1984 MERCEDES BENZ			
190D	2.2L L4 DSL	33-2561	
190E	2.0L L4 F/I	E-2865	
190E	2.3L L4 F/I	E-2865	
230E	2.3L L4 F/I	E-2865	
280SL	2.8L L6 F/I	E-2380	
300D	3.0L L5 DSL	E-2870	
300D	3.0L L6 DSL - w/EGR Valve	33-2549	
300D	3.0L L6 DSL - w/o EGR Valve	33-2642	
300SD	3.0L L5 DSL	E-2870	
300TD	3.0L L5 DSL	E-2870	
380SL	3.8L V8 F/I	E-2872	
500SEC	5.0L V8 F/I	E-2872	
500SEL	5.0L V8 F/I	E-2872	
500SL	5.0L V8 F/I	E-2872	
1983 MERCEDES BENZ			
240D	2.4L L4 DSL	E-2800	
300CD	3.0L L5 DSL	E-2870	
300D	3.0L L5 DSL	E-2870	
300SD	3.0L L5 DSL	E-2870	
300TD	3.0L L5 DSL	E-2870	
380SEL	3.8L V8 F/I	E-2872	
380SL	3.8L V8 F/I	E-2872	
1982 MERCEDES BENZ			
230E	2.3L L4 CARB	E-2865	
240D	2.4L L4 DSL	E-2800	
280SL	2.8L L6 F/I	E-2380	
300D	3.0L L5 DSL - Non-US	E-2870	
300SD	3.0L L5 DSL	E-2870	
300TD	3.0L L5 DSL	E-2870	
380SL	3.8L V8 F/I	E-2872	
1981 MERCEDES BENZ			
240D	2.4L L4 DSL	E-2800	
280CE	2.8L L6 F/I - US	E-2861	
280SL	2.8L L6 F/I	E-2380	
280SLC	2.8L L6 F/I	E-2380	
300D	3.0L L5 DSL - Non-US	E-2870	
300D	3.0L L5 DSL - US	E-2800	
300SD	3.0L L5 DSL	E-2870	
300TD	3.0L L5 DSL	E-2870	
380SL	3.8L V8 F/I	E-2872	
380SLC	3.8L V8 F/I	E-2872	
1980 MERCEDES BENZ			
240D	2.4L L4 DSL	E-2800	
280CE	2.8L L6 F/I - US	E-2861	
300D	3.0L L5 DSL - US	E-2800	
300SD	3.0L L5 DSL	E-2870	
450SL	4.5L V8 F/I	E-2872	
450SLC	4.5L V8 F/I	E-2872	
1979 MERCEDES BENZ			
240D	2.4L L4 DSL	E-2800	
280SE	2.8L L6 F/I - US	E-2861	
300D	3.0L L5 DSL - Non-US	E-2870	
300D	3.0L L5 DSL - US	E-2800	
300SD	3.0L L5 DSL	E-2870	
450SL	4.5L V8 F/I	E-2872	
450SLC	4.5L V8 F/I	E-2872	
1978 MERCEDES BENZ			
280CE	2.8L L6 F/I - US	E-2861	
280SE	2.8L L6 F/I - US	E-2861	
300D	3.0L L5 DSL - US	E-2800	

*Indicates 2 filters required ♦ - Intake kit available - see page 80 Applications updated daily at knfilters.com

Vehicle	Engine Type	Air Filter	Oil Filter
1978 MERCEDES BENZ			
450SL	4.5L V8 F/I	E-2872	
450SLC	4.5L V8 F/I	E-2872	
1977 MERCEDES BENZ			
240D	2.4L L4 DSL	E-2800	
300D	3.0L L5 DSL - Non-US	E-2870	
300D	3.0L L5 DSL - US	E-2800	
450SL	4.5L V8 F/I	E-2872	
450SLC	4.5L V8 F/I	E-2872	
1976 MERCEDES BENZ			
240D	2.4L L4 DSL	E-2800	
280CE	2.8L L6 F/I - w/Oval Filter	E-9166	
280SEL	2.8L L6 F/I	E-9166	
300D	3.0L L5 DSL - Non-US	E-2870	
300D	3.0L L5 DSL - US	E-2800	
450SLC	4.5L V8 F/I	E-2872	
1975 MERCEDES BENZ			
280C	2.8L L6 CARB	E-2380	
280CE	2.8L L6 F/I	E-2380	
280SE	2.8L L6 F/I	E-2380	
280SEL	2.8L L6 F/I	E-2380	
450SL	4.5L V8 F/I - Non-US	E-2872	
450SL	4.5L V8 F/I - US	E-1650	
450SLC	4.5L V8 F/I - Non-US	E-2872	
450SLC	4.5L V8 F/I - US	E-1650	
1974 MERCEDES BENZ			
280C	2.8L L6 CARB	E-2380	
280CE	2.8L L6 F/I	E-2380	
450SL	4.5L V8 F/I - Non-US	E-2872	
450SL	4.5L V8 F/I - US	E-1650	
450SLC	4.5L V8 F/I - Non-US	E-2872	
450SLC	4.5L V8 F/I - US	E-1650	
1973 MERCEDES BENZ			
280	2.8L L6 F/I	E-2380	
280C	2.8L L6 CARB	E-2380	
280CE	2.8L L6 F/I	E-2380	
280E	2.8L L6 F/I	E-2380	
280SE	2.8L L6 F/I	E-2380	
280SEL	2.8L L6 F/I	E-2380	
450SL	4.5L V8 F/I - Non-US	E-2872	
450SL	4.5L V8 F/I - US	E-1650	
450SLC	4.5L V8 F/I - US	E-1650	
1972 MERCEDES BENZ			
250C	2.5L L6 CARB	E-3780	
250CE	2.5L L6 CARB	E-3780	
280SEL	4.5L V8 F/I	E-1650	
300SEL	4.5L V8 F/I	E-1650	
350SLC	3.5L V8 F/I	E-2872	
1971 MERCEDES BENZ			
250C	2.8L L6 CARB	E-3780	
280SL	2.8L L6 F/I	E-2380	
1962 MERCEDES BENZ			
220SB	2.2L V6 F/I	E-2530	
2011 MERCURY			
Grand Marquis	4.6L V8 F/I	33-2272 ♦	HP-2010
Mariner	2.5L L4 F/I	33-2187	HP-1002
Mariner	3.0L V6 F/I	E-1990	HP-2011
Mariner Hybrid	2.5L L4 F/I	33-2347	HP-1002
Milan	2.5L L4 F/I	33-2357	HP-1002
2011 MERCURY			
Milan	3.0L V6 F/I	33-2340	HP-2011
2010 MERCURY			
Grand Marquis	4.6L V8 F/I	33-2272 ♦	HP-2010
Mariner	2.5L L4 F/I	33-2187	HP-1002
Mariner	3.0L V6 F/I	E-1990	HP-2011
Mariner Hybrid	2.5L L4 F/I	33-2347	HP-1002
Milan	2.5L L4 F/I	33-2357	HP-1002
Milan	3.0L V6 F/I	33-2340	HP-2011
Milan Hybrid	2.5L L4 F/I		HP-1002
Mountaineer	4.0L V6 F/I	33-2366	HP-2010
Mountaineer	4.6L V8 F/I	33-2353	HP-2010
2009 MERCURY			
Grand Marquis	4.6L V8 F/I	33-2272 ♦	HP-2010
Mariner	2.5L L4 F/I	33-2187	
Mariner	2.5L L4 F/I - Cartridge	33-2187	HP-7013
Mariner	2.5L L4 F/I - Spin On	33-2187	HP-1002
Mariner	3.0L V6 F/I	E-1990	HP-2011
Mariner Hybrid	2.5L L4 F/I	33-2347	
Mariner Hybrid	2.5L L4 F/I - Cartridge	33-2347	HP-7013
Mariner Hybrid	2.5L L4 F/I - Spin On	33-2347	HP-1002
Milan	2.3L L4 F/I	33-2357	
Milan	2.3L L4 F/I - Cartridge	33-2357	HP-7013
Milan	2.3L L4 F/I - Spin On	33-2357	HP-1002
Milan	3.0L V6 F/I	33-2340	HP-2010
Mountaineer	4.6L V8 F/I	33-2353	HP-2010
Sable	3.5L V6 F/I		HP-2009
2008 MERCURY			
Grand Marquis	4.6L V8 F/I	33-2272 ♦	HP-2010
Mariner	2.3L L4 F/I	33-2187	
Mariner	2.3L L4 F/I - Cartridge	33-2187	HP-7013
Mariner	2.3L L4 F/I - Spin On	33-2187	HP-1002
Mariner	3.0L V6 F/I	33-2187	HP-2010
Mariner Hybrid	2.3L L4 F/I	33-2347	
Mariner Hybrid	2.3L L4 F/I - Cartridge	33-2347	HP-7013
Mariner Hybrid	2.3L L4 F/I - Spin On	33-2347	HP-1002
Milan	2.3L L4 F/I	33-2357	
Milan	2.3L L4 F/I - Cartridge	33-2357	HP-7013
Milan	2.3L L4 F/I - Spin On	33-2357	HP-1002
Milan	3.0L V6 F/I	33-2340	HP-2010
Mountaineer	4.0L V6 F/I	33-2366	HP-2010
Mountaineer	4.6L V8 F/I	33-2353	HP-2010
Sable	3.5L V6 F/I	33-2395	HP-2009
2007 MERCURY			
Grand Marquis	4.6L V8 F/I	33-2272 ♦	HP-2010
Mariner	2.3L L4 F/I	33-2187	
Mariner	2.3L L4 F/I - Spin On	33-2187	HP-1002
Mariner	3.0L V6 F/I	33-2187	HP-2010
Mariner Hybrid	2.3L L4 F/I	33-2347	
Mariner Hybrid	2.3L L4 F/I - Cartridge	33-2347	HP-7013
Mariner Hybrid	2.3L L4 F/I - Spin On	33-2347	HP-1002
Milan	2.3L L4 F/I	33-2357	
Milan	2.3L L4 F/I - Cartridge	33-2357	HP-7013
Milan	2.3L L4 F/I - Spin On	33-2357	HP-1002
Milan	3.0L V6 F/I	33-2340	HP-2010
Montego	3.0L V6 F/I	33-2308	HP-2010
Monterey Van	4.2L V6 F/I	33-2321	HP-2009
Mountaineer	4.0L V6 F/I	33-2366	HP-2010
Mountaineer	4.6L V8 F/I	33-2353	HP-2010
2006 MERCURY			
Grand Marquis	4.6L V8 F/I	33-2272 ♦	HP-2010
Mariner	2.3L L4 F/I	33-2187	

*Indicates 2 filters required ♦ - Intake kit available - see page 80 Applications updated daily at knfilters.com

Vehicle	Engine Type	Air Filter	Oil Filter
2006 MERCURY			
Mariner	2.3L L4 F/I - Cartridge	33-2187	HP-7013
Mariner	2.3L L4 F/I - Spin On	33-2187	HP-1002
Mariner	3.0L V6 F/I	33-2187	HP-2010
Mariner Hybrid	2.3L L4 F/I	33-2347	
Mariner Hybrid	2.3L L4 F/I - Cartridge	33-2347	HP-7013
Mariner Hybrid	2.3L L4 F/I - Spin On	33-2347	HP-1002
Milan	2.3L L4 F/I	33-2357	
Milan	2.3L L4 F/I - Cartridge	33-2357	HP-7013
Milan	2.3L L4 F/I - Spin On	33-2357	HP-1002
Milan	3.0L V6 F/I	33-2340	HP-2010
Montego	3.0L V6 F/I	33-2308	HP-2010
Mountaineer	4.0L V6 F/I	33-2366	HP-2010
Mountaineer	4.6L V8 F/I	33-2353	HP-2010
2005 MERCURY			
Grand Marquis	4.6L V8 F/I	33-2272 ♦	HP-2010
Mariner	2.3L L4 F/I	33-2187	
Mariner	2.3L L4 F/I - Cartridge	33-2187	HP-7013
Mariner	2.3L L4 F/I - Spin On	33-2187	HP-1002
Mariner	3.0L V6 F/I	33-2187	HP-2010
Montego	3.0L V6 F/I	33-2308	HP-2010
Monterey Van	4.2L V6 F/I	33-2321	HP-2009
Mountaineer	4.0L V6 F/I	33-2207	HP-2010
Mountaineer	4.6L V8 F/I	33-2207 ♦	HP-2010
Sable	3.0L V6 F/I - VIN S, VIN 2	33-2150	HP-2010
Sable	3.0L V6 F/I - VIN U	33-2150	HP-2009
2004 MERCURY			
Grand Marquis	4.6L V8 F/I	33-2272 ♦	HP-2010
Marauder	4.6L V8 F/I	33-2272 ♦	HP-2010
Monterey Van	4.2L V6 F/I		HP-2009
Mountaineer	4.0L V6 F/I	33-2207	HP-2010
Mountaineer	4.6L V8 F/I	33-2207 ♦	HP-2010
Sable	3.0L V6 F/I - DOHC	33-2150	HP-2010
Sable	3.0L V6 F/I - VIN S, VIN 2	33-2150	HP-2010
Sable	3.0L V6 F/I - VIN U	33-2150	HP-2009
2003 MERCURY			
Grand Marquis	4.6L V8 F/I	33-2272	HP-2010
Marauder	4.6L V8 F/I	33-2272 ♦	HP-2010
Mountaineer	4.0L V6 F/I	33-2207 ♦	HP-2010
Mountaineer	4.6L V8 F/I	33-2207 ♦	HP-2010
Sable	3.0L V6 F/I - DOHC	33-2150	HP-2010
Sable	3.0L V6 F/I - VIN S, VIN 2	33-2150	HP-2010
Sable	3.0L V6 F/I - VIN U	33-2150	HP-2009
2002 MERCURY			
Cougar	2.0L L4 F/I	33-2132	HP-1012
Cougar	2.5L V6 F/I	33-2115-1	HP-2010
Grand Marquis	4.6L V8 F/I	33-2272	HP-2010
Mountaineer	4.0L V6 F/I	33-2207 ♦	HP-2010
Mountaineer	4.6L V8 F/I	33-2207 ♦	HP-2010
Sable	3.0L V6 F/I - DOHC	33-2150	HP-2010
Sable	3.0L V6 F/I - VIN S	33-2150	HP-2010
Sable	3.0L V6 F/I - VIN U	33-2150	HP-2009
Villager Van	3.3L V6 F/I	33-2091-1	HP-1010
2001 MERCURY			
Cougar	2.0L L4 F/I	33-2132	HP-1012
Cougar	2.5L V6 F/I	33-2115-1 ♦	HP-2010
Grand Marquis	4.6L V8 F/I	33-2272	HP-2010
Mountaineer	4.0L V6 F/I	33-2106-1	
Mountaineer	4.0L V6 F/I - 22mm Thread	33-2106-1	HP-2010
Mountaineer	4.0L V6 F/I - 3/4 thread	33-2106-1	HP-3001
2001 MERCURY			
Mountaineer	5.0L V8 F/I	33-2106-1	HP-2010
Sable	3.0L V6 F/I - VIN S, VIN 2	33-2150	HP-2010
Sable	3.0L V6 F/I - VIN U	33-2150	HP-2009
Villager Van	3.3L V6 F/I	33-2091-1	HP-1010
2000 MERCURY			
Cougar	2.0L L4 F/I	33-2132	HP-1012
Cougar	2.5L V6 F/I	33-2115-1 ♦	HP-2010
Grand Marquis	4.6L V8 F/I	33-2272	HP-2010
Mountaineer	4.0L V6 F/I	33-2106-1	HP-3001
Mountaineer	5.0L V8 F/I	33-2106-1	HP-2010
Mystique	2.0L L4 F/I	33-2132	HP-1012
Mystique	2.5L V6 F/I	33-2115-1	HP-2010
Sable	3.0L V6 F/I - VIN S	33-2150	HP-2010
Sable	3.0L V6 F/I - VIN U	33-2150	HP-2009
Villager Van	3.3L V6 F/I	33-2091-1	HP-1010
1999 MERCURY			
Cougar	2.0L L4 F/I	33-2132	HP-1012
Cougar	2.5L V6 F/I	33-2115-1	HP-2010
Grand Marquis	4.6L V8 F/I	33-2272	HP-2010
Mountaineer	4.0L V6 F/I	33-2106-1	HP-3001
Mountaineer	5.0L V8 F/I	33-2106-1	HP-2010
Mystique	2.0L L4 F/I	33-2132	HP-1012
Mystique	2.5L V6 F/I	33-2115-1	HP-2010
Sable	3.0L V6 F/I - VIN S	33-2107	HP-2010
Sable	3.0L V6 F/I - VIN U	33-2107	HP-2009
Tracer	2.0L L4 F/I	E-0995	HP-2009
Villager Van	3.3L V6 F/I	33-2091-1	HP-1010
1998 MERCURY			
Grand Marquis	4.6L V8 F/I	33-2272	HP-2010
Mountaineer	4.0L V6 F/I		HP-3001
Mountaineer	4.0L V6 F/I - w/Panel Filter	33-2106-1	HP-3001
Mountaineer	4.0L V6 F/I - w/Round Filter	E-0996	HP-3001
Mountaineer	5.0L V8 F/I		HP-2010
Mountaineer	5.0L V8 F/I - w/Panel Filter	33-2106-1	HP-2010
Mountaineer	5.0L V8 F/I - w/Round Filter	E-0996	HP-2010
Mystique	2.0L L4 F/I	33-2132	HP-1012
Mystique	2.5L V6 F/I	33-2115-1	HP-2010
Sable	3.0L V6 F/I - VIN S	33-2107	HP-2010
Sable	3.0L V6 F/I - VIN U	33-2107	HP-2009
Tracer	2.0L L4 F/I	E-0995	HP-2009
Villager Van	3.0L V6 F/I	33-2091-1	HP-2008
1997 MERCURY			
Cougar	3.8L V6 F/I	33-2033 ♦	HP-2009
Cougar	4.6L V8 F/I	33-2033 ♦	HP-2010
Grand Marquis	4.6L V8 F/I	33-2272	HP-2010
Mountaineer	5.0L V8 F/I		HP-2010
Mountaineer	5.0L V8 F/I - w/Panel Filter	33-2106-1 ♦	HP-2010
Mountaineer	5.0L V8 F/I - w/Round Filter	E-0996 ♦	HP-2010
Sable	3.0L V6 F/I - VIN S	33-2107	HP-2010
Sable	3.0L V6 F/I - VIN U	33-2107	HP-2009
Tracer	2.0L L4 F/I	E-0995	HP-2009
Villager Van	3.0L V6 F/I	33-2091-1	HP-2008
1996 MERCURY			
Cougar	3.8L V6 F/I	33-2033 ♦	HP-2009
Cougar	4.6L V8 F/I	33-2033 ♦	HP-2010
Grand Marquis	4.6L V8 F/I	33-2272	HP-2010
Sable	3.0L V6 F/I - VIN S	33-2107	HP-2010

*Indicates 2 filters required ♦ - Intake kit available - see page 80 Applications updated daily at knfilters.com

Vehicle	Engine Type	Air Filter	Oil Filter
1996 MERCURY			
Sable	3.0L V6 F/I - VIN U	33-2107	HP-2009
Villager Van	3.0L V6 F/I	33-2091-1	HP-2008
1995 MERCURY			
Cougar	3.8L V6 F/I	33-2033 ♦	HP-2009
Cougar	4.6L V8 F/I	33-2033 ♦	HP-2010
Grand Marquis	4.6L V8 F/I	33-2272	HP-2010
Sable	3.0L V6 F/I	33-2024	HP-2009
Sable	3.8L V6 F/I	33-2024	HP-2009
Tracer	1.9L L4 F/I	33-2126	HP-2009
Villager Van	3.0L V6 F/I	33-2091-1	HP-2008
1994 MERCURY			
Capri	1.6L L4 F/I	33-2027	HP-1008
Cougar	3.8L V6 F/I	33-2033 ♦	HP-2009
Cougar	4.6L V8 F/I	33-2033 ♦	HP-2010
Grand Marquis	4.6L V8 F/I	33-2272	HP-2010
Sable	3.0L V6 F/I	33-2024	HP-2009
Sable	3.8L V6 F/I	33-2024	HP-2009
Tracer	1.9L L4 F/I	33-2126	HP-2009
Villager Van	3.0L V6 F/I	33-2091-1	HP-2008
1993 MERCURY			
Capri	1.6L L4 F/I	33-2027	HP-1008
Cougar	3.8L V6 F/I	33-2033 ♦	HP-2009
Cougar	5.0L V8 F/I	33-2033 ♦	HP-3001
Grand Marquis	4.6L V8 F/I	33-2272	HP-2010
Sable	3.0L V6 F/I	33-2024	HP-2009
Topaz	2.3L L4 F/I	33-2107	HP-2004
Tracer	1.9L L4 F/I	33-2126	HP-2009
Villager Van	3.0L V6 F/I	33-2091-1	HP-2008
1992 MERCURY			
Capri	1.6L L4 F/I	33-2027	HP-1008
Cougar	5.0L V8 F/I	33-2033 ♦	HP-3001
Grand Marquis	4.6L V8 F/I	33-2272	HP-2010
Sable	3.8L V6 F/I	33-2024	HP-2009
1991 MERCURY			
Capri	1.6L L4 F/I	33-2027	HP-1008
Colony Park	5.0L V8 F/I		HP-3001
Cougar	3.8L V6 F/I	33-2033 ♦	HP-2009
Cougar	5.0L V8 F/I	33-2033 ♦	HP-3001
Grand Marquis	5.0L V8 F/I	33-2195	HP-3001
1990 MERCURY			
Cougar	3.8L V6 F/I	33-2033	HP-2009
Grand Marquis	5.0L V8 F/I	33-2195	HP-3001
1989 MERCURY			
Cougar	3.8L V6 F/I	33-2033	HP-2009
Grand Marquis	5.0L V8 F/I	33-2195	HP-3001
Tracer	1.6L L4 F/I	33-2027	HP-1004
1988 MERCURY			
Cougar	5.0L V8 F/I	33-2015	HP-3001
Grand Marquis	5.0L V8 F/I	33-2195	HP-3001
1987 MERCURY			
Cougar	5.0L V8 F/I	33-2015	HP-3001
Grand Marquis	5.0L V8 F/I	33-2195	HP-3001
1986 MERCURY			
Capri	5.0L V8 F/I	33-2015	HP-3001
Cougar	3.8L V6 F/I	E-1325	HP-3001
Grand Marquis	5.0L V8 F/I	33-2195	HP-3001
Lynx	1.9L L4 CARB	E-1958	HP-2009
Lynx	1.9L L4 F/I	33-2002	HP-2009

Vehicle	Engine Type	Air Filter	Oil Filter
1985 MERCURY			
Capri	5.0L V8 CARB	E-1535	HP-3001
Grand Marquis	5.0L V8 F/I	E-1290	HP-3001
Lynx	1.6L L4 CARB	E-1958	HP-2009
1983 MERCURY			
Capri	5.0L V8 CARB	E-1535	HP-3001
Grand Marquis	5.0L V8 F/I	E-1290	HP-3001
Lynx	1.6L L4 CARB	E-1958	HP-2009
Marquis	3.8L V6 CARB	E-1325	HP-3001
1974 MERCURY			
Capri	171 V6 CARB	E-1350	HP-2004
1973 MERCURY			
Cougar	351 V8 2 BBL.		HP-3001
Cougar	351 V8 4 BBL.	E-1580	HP-3001
1972 MERCURY			
Cougar	351 V8 2 BBL.	E-1300	HP-3001
Cougar	351 V8 4 BBL.	E-1570	HP-3001
1971 MERCURY			
Cougar	351 V8 CARB		HP-3001
Cougar	351 V8 CARB - w/o ram air	E-1560	HP-3001
Cougar	351 V8 CARB - w/ram air	E-1570	HP-3001
1970 MERCURY			
Cougar	351 V8 CARB	E-1570	HP-3001
1969 MERCURY			
Cougar	351 V8 CARB	E-1570	HP-3001
1968 MERCURY			
Cougar	302 V8 CARB	E-1570	HP-3001
Cougar	390 V8 CARB	E-1570	HP-3001
1967 MERCURY			
Cougar	289 V8 CARB		HP-3001
Cougar	390 V8 CARB		HP-3001
1965 MERCURY			
Comet	289 V8 CARB		HP-3001
Monterey	390 V8 CARB		HP-3001
1989 MERKUR			
Scorpio	2.9L V6 F/I	33-2013	HP-2004
1988 MERKUR			
Scorpio	2.9L V6 F/I	33-2013	HP-2004
XR4Ti	2.3L L4 F/I	E-1931	HP-3001
1987 MERKUR			
XR4Ti	2.3L L4 F/I	E-1931	HP-3001
1985 MERKUR			
XR4Ti	2.3L L4 F/I	E-1931	HP-3001
2006 MG			
ZT-T180	2.5L V6 F/I	33-2890	
2005 MG			
ZT-T190	2.5L V6 F/I	33-2890	
1980 MG			
MGB	1.8L L4 CARB	E-2401	HP-1002
1979 MG			
MGB	110 L4 CARB	E-2401	HP-1002
1978 MG			
MGB	110 L4 CARB	E-2401	HP-1002

*Indicates 2 filters required ♦ - Intake kit available - see page 80 Applications updated daily at knfilters.com

AIR & OIL FILTERS

Vehicle	Engine Type	Air Filter	Oil Filter
1977 MG			
MGB	110 L4 CARB	E-2401	HP-1002
MGB	3.5L V8 F/I		HP-2004
1976 MG			
MGB	110 L4 CARB	E-2401	HP-1002
MGB	3.5L V8 F/I		HP-2004
1975 MG			
MGB	110 L4 CARB	E-2401	HP-1002
1974 MG			
MGB	110 L4 CARB	E-2400*	HP-2004
Midget	78 L4 CARB	E-2230	HP-1002
1973 MG			
MGB	110 L4 CARB	E-2400*	HP-2004
Midget	78 L4 CARB	E-2230	HP-1002
1972 MG			
MGB	110 L4 CARB	E-2400*	HP-2004
Midget	78 L4 CARB	E-2230	HP-1002
1971 MG			
MGB	110 L4 CARB	E-2400*	HP-2004
Midget	78 L4 CARB	E-2230	HP-1002
1970 MG			
MGB	110 L4 CARB	E-2400*	
Midget	78 L4 CARB	E-2230	
1969 MG			
Midget	78 L4 CARB	E-2230	
1968 MG			
Midget	78 L4 CARB	E-2230	
1967 MG			
Midget	78 L4 CARB	E-2230	
1965 MG			
Midget	67 L4 CARB	E-2230	
1962 MG			
Midget	58 L4 CARB	E-2230	
2013 MINI			
Cooper	1.6L L4 F/I - US	33-2386	
Cooper Clubman	1.6L L4 F/I - US	33-2386	
Cooper Countryman	1.6L L4 F/I - US	33-2386	
Cooper John Cooper Works	1.6L L4 F/I	33-2936	
Cooper John Cooper Works Clubman	1.6L L4 F/I	33-2936	
Cooper S	1.6L L4 F/I	33-2936	
Cooper S Clubman	1.6L L4 F/I - US	33-2936	
Cooper S Countryman	1.6L L4 F/I - US	33-2936	
2012 MINI			
Cooper	1.6L L4 F/I - US	33-2386	
Cooper Clubman	1.6L L4 F/I - US	33-2386	
Cooper Countryman	1.6L L4 F/I - US	33-2386	
Cooper John Cooper Works	1.6L L4 F/I	33-2936	
Cooper John Cooper Works Clubman	1.6L L4 F/I	33-2936	
Cooper S	1.6L L4 F/I	33-2936	
Cooper S Clubman	1.6L L4 F/I - US	33-2936	
Cooper S Countryman	1.6L L4 F/I - US	33-2936	
2011 MINI			
Cooper	1.6L L4 DSL	E-2985	
2011 MINI			
Cooper	1.6L L4 F/I - US	33-2386 ♦	
Cooper Clubman	1.6L L4 DSL	E-2985	
Cooper Clubman	1.6L L4 F/I - US	33-2386 ♦	
Cooper Countryman	1.6L L4 DSL	E-2985	
Cooper Countryman	1.6L L4 F/I - Non-US, w/manual trans.	33-2941	
Cooper Countryman	1.6L L4 F/I - US	33-2386	
Cooper John Cooper Works	1.6L L4 F/I	33-2936	
Cooper John Cooper Works Clubman	1.6L L4 F/I	33-2936	
Cooper S	1.6L L4 F/I - US	33-2936	
Cooper S Clubman	1.6L L4 F/I - US	33-2936	
Cooper S Countryman	1.6L L4 F/I - Non-US, w/manual trans.	33-2936	
Cooper S Countryman	1.6L L4 F/I - US	33-2936	
Cooper S Countryman	2.0L L4 DSL	E-2985	
Cooper SD	2.0L L4 DSL	E-2985	
Cooper SD Clubman	2.0L L4 DSL	E-2985	
Cooper SD Countryman	2.0L L4 DSL	E-2985	
2010 MINI			
Cooper	1.6L L4 DSL - from 9/10	E-2985	
Cooper	1.6L L4 DSL - To 8/10	33-2929	
Cooper	1.6L L4 F/I - US	33-2386 ♦	
Cooper Clubman	1.6L L4 DSL - from 9/10	E-2985	
Cooper Clubman	1.6L L4 DSL - To 8/10	33-2929	
Cooper Clubman	1.6L L4 F/I - US	33-2386 ♦	
Cooper Countryman	1.6L L4 DSL	E-2985	
Cooper Countryman	1.6L L4 F/I - Manual Trans.	33-2941	
Cooper John Cooper Works	1.6L L4 F/I	33-2936	
Cooper John Cooper Works Clubman	1.6L L4 F/I	33-2936	
Cooper S	1.6L L4 F/I - US	33-2936 ♦	
Cooper S Clubman	1.6L L4 F/I - US	33-2936 ♦	
Cooper S Countryman	1.6L L4 F/I - Manual Trans.	33-2936	
2009 MINI			
Cooper	1.6L L4 DSL	33-2929 ♦	
Cooper	1.6L L4 F/I - US	33-2386 ♦	
Cooper Clubman	1.6L L4 DSL	33-2929 ♦	
Cooper Clubman	1.6L L4 F/I - US	33-2386 ♦	
Cooper John Cooper Works	1.6L L4 F/I	33-2936	
Cooper S	1.6L L4 F/I - US	33-2936 ♦	
Cooper S Clubman	1.6L L4 F/I - US	33-2936 ♦	
2008 MINI			
Cooper	1.6L L4 DSL	33-2929 ♦	
Cooper	1.6L L4 F/I - Convertible Manual Trans	33-2885 ♦	
Cooper	1.6L L4 F/I - Non-US, Convertible	33-2885	
		33-2885 ♦	
Cooper	1.6L L4 F/I - Non-US, Coupe	33-2941 ♦	
		33-2941 ♦	
Cooper	1.6L L4 F/I - US, Convertible, Auto Trans.	33-2239 ♦	
Cooper	1.6L L4 F/I - US, Coupe	33-2386 ♦	
Cooper Clubman	1.6L L4 DSL	33-2929 ♦	

*Indicates 2 filters required ♦ - Intake kit available - see page 80 Applications updated daily at knfilters.com

Vehicle	Engine Type	Air Filter	Oil Filter
2008 MINI			
Cooper Clubman	1.6L L4 F/I - Non-US, Manual Trans.	33-2941 ♦	
Cooper Clubman	1.6L L4 F/I - US	33-2386 ♦	
Cooper S	1.6L L4 F/I - Non-US	33-2936 ♦	
Cooper S	1.6L L4 F/I - US, Convertible	33-2270 ♦	
Cooper S	1.6L L4 F/I - US, Coupe	33-2936 ♦	
Cooper S Clubman	1.6L L4 F/I - Non-US, w/auto. trans	33-2936 ♦	
Cooper S Clubman	1.6L L4 F/I - US	33-2936	
Works	1.6L L4 F/I	33-2936	
2007 MINI			
Cooper	1.6L L4 DSL	33-2929 ♦	
Cooper	1.6L L4 F/I - Convertible Manual Trans	33-2885 ♦	
Cooper	1.6L L4 F/I - Non-US, Convertible, Auto Trans.	33-2885	
		33-2885 ♦	
Cooper	1.6L L4 F/I - Non-US, Coupe	33-2941 ♦	
		33-2941 ♦	
Cooper	1.6L L4 F/I - US, Convertible, Auto Trans.	33-2239 ♦	
Cooper	1.6L L4 F/I - US, Coupe	33-2386 ♦	
		33-2386 ♦	
Cooper Clubman	1.6L L4 DSL	33-2929 ♦	
Cooper S	1.6L L4 F/I - Convertible	33-2270 ♦	
Cooper S	1.6L L4 F/I - Coupe	33-2936 ♦	
One	1.4L L4 F/I	33-2941 ♦	
2006 MINI			
Cooper	1.4L L4 F/I	33-2239	
Cooper	1.6L L4 F/I - Auto Trans.	33-2239 ♦	
Cooper	1.6L L4 F/I - Non-US, from 11/06, Coupe	33-2941 ♦	
Cooper	1.6L L4 F/I - US, Manual Trans.	33-2885 ♦	
Cooper S	1.6L L4 F/I	33-2270 ♦	
		33-2270 ♦	
2005 MINI			
Cooper	1.4L L4 F/I	33-2239	
Cooper	1.6L L4 F/I - Non-US	33-2885 ♦	
Cooper	1.6L L4 F/I - US, Auto Trans.	33-2239 ♦	
Cooper	1.6L L4 F/I - US, Manual Trans.	33-2885 ♦	
Cooper S	1.6L L4 F/I	33-2270 ♦	
2004 MINI			
Cooper	1.4L L4 F/I	33-2239	
Cooper	1.6L L4 F/I - from 8/04, Manual Trans.	33-2885 ♦	
Cooper	1.6L L4 F/I - Non-US, from 8/04	33-2885 ♦	
Cooper	1.6L L4 F/I - to 7/04	33-2239 ♦	
Cooper	1.6L L4 F/I - to 7/04, US, from 8/04, Auto Trans.	33-2239 ♦	
Cooper S	1.6L L4 F/I	33-2270 ♦	
2003 MINI			
Cooper	1.4L L4 F/I	33-2239	
Cooper	1.6L L4 F/I	33-2239 ♦	
Cooper S	1.6L L4 F/I	33-2270 ♦	

Vehicle	Engine Type	Air Filter	Oil Filter
2002 MINI			
Cooper	1.6L L4 F/I	33-2239 ♦	
Cooper S	1.6L L4 F/I	33-2270 ♦	
2001 MINI			
Cooper	1.6L L4 F/I	33-2239 ♦	
2000 MINI			
Cooper	1.6L L4 F/I	33-2239 ♦	
2013 MITSUBISHI			
L200	2.5L L4 DSL	33-2951	
Lancer	2.0L L4 F/I		HP-1004
Lancer	2.4L L4 F/I	33-2392	HP-1010
Lancer Evolution	2.0L L4 F/I	33-2392 ♦	HP-1004
Lancer Ralliart	2.0L L4 F/I	33-2392	HP-1004
Lancer VI	1.8L L4 DSL	33-2050-1	
Lancer VI	1.8L L4 F/I	33-2392	
Lancer VI	2.0L L4 F/I	33-2392	
Outlander Sport	2.0L L4 F/I		HP-1004
Pajero IV	3.2L V6 DSL	33-2164	
2012 MITSUBISHI			
Eclipse	2.4L L4 F/I	33-2285	HP-1004
Eclipse	3.8L V6 F/I	33-2285	HP-1010
Endeavor	3.8L V6 F/I	33-2285	HP-1010
Galant	2.4L L4 F/I	33-2285	HP-1004
L200	2.5L L4 DSL	33-2951	
Lancer	2.0L L4 F/I	33-2392	HP-1010
Lancer	2.4L L4 F/I	33-2392	HP-1010
		33-2392 ♦	HP-1010
Lancer Evolution	2.0L L4 F/I	33-2392 ♦	HP-1004
Lancer Ralliart	2.0L L4 F/I	33-2392	HP-1004
Lancer Sportback	2.0L L4 F/I	33-2392	
Lancer VI	1.6L L4 F/I	33-2392	
Lancer VI	1.8L L4 DSL	33-2050-1	
Lancer VI	1.8L L4 F/I	33-2392	
Lancer VI	2.0L L4 F/I	33-2392	
Outlander	2.0L L4 F/I - to 6/12	33-2392	
Outlander	2.2L L4 DSL - 156BHP	33-2392	
Outlander	2.2L L4 DSL - 177BHP	33-2050-1	
Outlander	2.4L L4 F/I	33-2392	HP-1004
Outlander	3.0L V6 F/I	33-2392	HP-1010
Outlander Sport	2.0L L4 F/I	33-2392	HP-1004
Pajero IV	3.2L V6 DSL	33-2164	
2011 MITSUBISHI			
ASX	1.8L L4 DSL	33-2050-1	
Eclipse	2.4L L4 F/I	33-2285	HP-1004
Eclipse	3.8L V6 F/I	33-2285 ♦	HP-1010
Endeavor	3.8L V6 F/I	33-2285	HP-1010
Galant	2.4L L4 F/I	33-2285	HP-1004
L200	2.5L L4 DSL	33-2951	
Lancer	2.0L L4 F/I	33-2392	HP-1010
Lancer	2.4L L4 F/I	33-2392 ♦	HP-1010
Lancer Evolution	2.0L L4 F/I	33-2392 ♦	HP-1004
Lancer Ralliart	2.0L L4 F/I	33-2392	HP-1004
Lancer VI	1.6L L4 F/I	33-2392	
Lancer VI	1.8L L4 DSL	33-2050-1	
Lancer VI	1.8L L4 F/I	33-2392	
Lancer VI	2.0L L4 F/I	33-2392	
Outlander	2.0L L4 DSL	33-2392	
Outlander	2.0L L4 F/I	33-2392	
Outlander	2.2L L4 DSL - 156BHP	33-2392	
Outlander	2.2L L4 DSL - 177BHP	33-2050-1	
Outlander	2.4L L4 F/I	33-2392	HP-1004
Outlander	3.0L V6 F/I	33-2392	HP-1010

*Indicates 2 filters required ♦ - Intake kit available - see page 80 Applications updated daily at knfilters.com

Vehicle	Engine Type	Air Filter	Oil Filter
2011 MITSUBISHI			
Outlander Sport	2.0L L4 F/I	33-2392	HP-1004
Pajero IV	3.2L V6 DSL	33-2164	
Pajero IV	3.8L V6 F/I	33-2164	
RVR	2.0L L4 F/I		HP-1010
2010 MITSUBISHI			
ASX	1.8L L4 DSL	33-2050-1	
Eclipse	2.4L L4 F/I	33-2285	HP-1004
Eclipse	3.8L V6 F/I	33-2285 ♦	HP-1010
Endeavor	3.8L V6 F/I	33-2285	HP-1010
Galant	2.4L L4 F/I	33-2285	HP-1004
Galant	3.8L V6 F/I	33-2285	
L200	2.5L L4 DSL	33-2951	
Lancer	1.5L L4 F/I	33-2392	
Lancer	1.8L L4 F/I	33-2392	
Lancer	2.0L L4 DSL	33-2392	
Lancer	2.0L L4 F/I	33-2392	HP-1010
Lancer	2.4L L4 F/I	33-2392 ♦	HP-1010
Lancer Evolution	2.0L L4 F/I	33-2392 ♦	HP-1004
Lancer Ralliart	2.0L L4 F/I	33-2392	HP-1004
Lancer VI	1.6L L4 F/I	33-2392	
Montero Sport	3.5L V6 F/I		HP-1004
Outlander	2.0L L4 DSL	33-2392	
Outlander	2.0L L4 F/I	33-2392	
Outlander	2.2L L4 DSL - 156BHP	33-2392	
Outlander	2.2L L4 DSL - 177BHP	33-2050-1	
Outlander	2.4L L4 F/I	33-2392	HP-1004
Outlander	3.0L V6 F/I	33-2392	HP-1010
Pajero IV	3.2L V6 DSL	33-2164	
Pajero IV	3.8L V6 F/I	33-2164	
Raider	3.7L V6 F/I	33-2175	
2009 MITSUBISHI			
Colt CZC Cabriolet	1.5L L4 F/I	33-2881	
Eclipse	2.4L L4 F/I	33-2285	HP-1004
Eclipse	3.8L V6 F/I	33-2285 ♦	HP-1010
Endeavor	3.8L V6 F/I	33-2285	HP-1010
Galant	2.4L L4 F/I	33-2285	HP-1004
Galant	3.8L V6 F/I	33-2285	HP-1010
L200	2.5L L4 DSL	33-2951	
Lancer	1.5L L4 F/I	33-2392	
Lancer	1.8L L4 F/I	33-2392	
Lancer	2.0L L4 DSL	33-2392	
Lancer	2.0L L4 F/I	33-2392 ♦	HP-1010
Lancer	2.4L L4 F/I	33-2392 ♦	HP-1010
Lancer Evolution	2.0L L4 F/I	33-2392 ♦	HP-1004
Lancer Ralliart	2.0L L4 F/I	33-2392	HP-1004
Outlander	2.0L L4 DSL	33-2392	
Outlander	2.0L L4 F/I	33-2105	
Outlander	2.2L L4 DSL	33-2392	
Outlander	2.4L L4 F/I	33-2392	HP-1004
Outlander	3.0L V6 F/I	33-2392	HP-1010
Pajero IV	3.8L V6 F/I	33-2164	
Raider	3.7L V6 F/I	33-2175	HP-2011
2008 MITSUBISHI			
Colt CZC Cabriolet	1.5L L4 F/I	33-2881 ♦	
Eclipse	2.4L L4 F/I	33-2285	HP-1008
Eclipse	3.8L V6 F/I	33-2285 ♦	HP-1010
Endeavor	3.8L V6 F/I	33-2285	HP-1010
Galant	2.4L L4 F/I	33-2285	HP-1004
Galant	3.8L V6 F/I	33-2285	HP-1010
L200	2.5L L4 DSL	33-2951	
Lancer	1.3L L4 F/I	33-2105	
Lancer	1.5L L4 F/I	33-2392	

Vehicle	Engine Type	Air Filter	Oil Filter
2008 MITSUBISHI			
Lancer	1.6L L4 F/I	33-2105	
Lancer	1.8L L4 F/I	33-2392	
Lancer	2.0L L4 DSL	33-2392	
Lancer	2.0L L4 F/I	33-2392 ♦	HP-1010
Lancer Evolution	2.0L L4 F/I	33-2392 ♦	HP-1010
Outlander	2.0L L4 DSL	33-2392	
Outlander	2.0L L4 F/I	33-2105	
Outlander	2.4L L4 F/I	33-2392	HP-1004
Outlander	3.0L V6 F/I	33-2392	HP-1010
Pajero IV	3.2L V6 DSL	33-2164	
Pajero IV	3.8L V6 F/I	33-2164	
Raider	3.7L V6 F/I	33-2175 ♦	HP-2009
Raider	4.7L V8 F/I	33-2175	HP-2004
Triton	2.5L L4 DSL	33-2951	
2007 MITSUBISHI			
Colt CZC Cabriolet	1.5L L4 F/I	33-2881 ♦	
Colt VI	1.5L L3 DSL	33-2881	
Colt VI	1.5L L4 F/I	33-2881 ♦	
Eclipse	2.4L L4 F/I	33-2285	HP-1008
Eclipse	3.8L V6 F/I	33-2285 ♦	HP-1010
Endeavor	3.8L V6 F/I	33-2285	HP-1010
Galant	2.4L L4 F/I	33-2285	HP-1010
Galant	3.8L V6 F/I	33-2285	HP-1010
L200	2.5L L4 DSL	33-2951	
Lancer	1.3L L4 F/I	33-2105	
Lancer	1.6L L4 F/I	33-2105	
Lancer	2.0L L4 F/I	33-2105	
Lancer	2.0L L4 F/I - exc. Turbo, Non-US	33-2105	HP-1008
Lancer	2.4L L4 F/I	33-2105	HP-1004
Lancer Evolution	2.0L L4 F/I	33-2105	
Lancer Evolution	2.0L L4 F/I - Turbo	33-2105	HP-1010
Montero	3.8L V6 F/I	33-2164	
Outlander	2.0L L4 DSL	33-2392	
Outlander	2.0L L4 F/I	33-2105	
Outlander	2.4L L4 F/I - from 3/07	33-2392	
Outlander	2.4L L4 F/I - to 2/07	33-2105	
Outlander	3.0L V6 F/I	33-2392	HP-1008
Pajero III	3.2L L4 DSL	33-2164	
Pajero IV	3.8L V6 F/I	33-2164	
Raider	3.7L V6 F/I	33-2175 ♦	HP-2009
Raider	4.7L V8 F/I	33-2175 ♦	HP-2004
2006 MITSUBISHI			
Colt VI	1.5L L3 DSL	33-2881	
Colt VI	1.5L L4 F/I	33-2881 ♦	
Eclipse	2.4L L4 F/I	33-2285	HP-1008
Eclipse	3.8L V6 F/I	33-2285 ♦	HP-1010
Endeavor	3.8L V6 F/I	33-2285	HP-1010
Galant	2.4L L4 F/I	33-2285	HP-1008
Galant	3.8L V6 F/I	33-2285	HP-1010
L200	2.5L L4 DSL - From 5/06	33-2951 ♦	
Lancer	1.3L L4 F/I	33-2105	
Lancer	1.6L L4 F/I	33-2105	
Lancer	2.0L L4 F/I	33-2105 ♦	HP-1008
Lancer	2.4L L4 F/I	33-2105	HP-1008
Lancer Evolution	2.0L L4 F/I	33-2105 ♦	HP-1010
Montero	3.8L V6 F/I	33-2164	HP-1004
Outlander	2.0L L4 F/I	33-2105	
Outlander	2.4L L4 F/I	33-2105	HP-1008
Pajero III	3.2L L4 DSL	33-2164	
Raider	3.7L V6 F/I	33-2175 ♦	HP-2009
Raider	4.7L V8 F/I	33-2175 ♦	HP-2004

*Indicates 2 filters required ♦ - Intake kit available - see page 80 Applications updated daily at knfilters.com

Vehicle	Engine Type	Air Filter	Oil Filter
2005 MITSUBISHI			
Eclipse	2.4L L4 F/I	33-2072	HP-1010
		33-2072 ♦	HP-1010
Eclipse	3.0L V6 F/I	33-2072 ♦	HP-1004
Eclipse GT	3.0L V6 F/I	33-2072 ♦	HP-1004
Endeavor	3.8L V6 F/I	33-2285	HP-1010
Galant	2.4L L4 F/I	33-2285	HP-1010
Galant	3.8L V6 F/I	33-2285	HP-1010
Galloper	2.5L L4 DSL	E-4810	
Lancer	1.3L L4 F/I	33-2105	
Lancer	1.6L L4 F/I	33-2105	
Lancer	2.0L L4 F/I	33-2105 ♦	HP-1008
Lancer Evolution	2.0L L4 F/I	33-2105 ♦	HP-1010
Lancer Ralliart	2.4L L4 F/I	33-2105	HP-1008
Montero	3.8L V6 F/I	33-2164	HP-1004
Outlander	2.0L L4 F/I	33-2105	
Outlander	2.4L L4 F/I	33-2105	HP-1008
Pajero Classic	2.5L L4 DSL	38-9207	
Pajero Classic	3.2L L4 DSL	33-2164	
Pajero III	3.2L L4 DSL	33-2164	
Pajero Sport	2.5L L4 DSL	38-9207	
Pajero Sport	3.0L V6 F/I	33-2045	
2004 MITSUBISHI			
Diamante	3.5L V6 F/I	33-2151	HP-1010
Eclipse	2.4L L4 F/I	33-2072	HP-1010
		33-2072 ♦	HP-1010
Eclipse	3.0L V6 F/I	33-2072 ♦	HP-1004
Eclipse GT	3.0L V6 F/I	33-2072 ♦	HP-1004
Endeavor	3.8L V6 F/I	33-2285	HP-1010
Galant	2.4L L4 F/I	33-2285	HP-1010
Galant	3.8L V6 F/I	33-2285	HP-1010
Galant IV	2.4L L4 F/I	33-2794	HP-1010
Galant VI	2.0L L4 F/I	33-2794	
Lancer	1.3L L4 F/I	33-2105	
Lancer	1.6L L4 F/I	33-2105	
Lancer	2.0L L4 F/I	33-2105 ♦	HP-1008
Lancer Evolution	2.0L L4 F/I	33-2105 ♦	HP-1010
Lancer Ralliart	2.4L L4 F/I	33-2105	HP-1008
Lancer Sportback	2.4L L4 F/I	33-2105	HP-1008
Montero	3.8L V6 F/I	33-2164	HP-1004
Montero Sport	3.5L V6 F/I	33-2112	HP-1004
Outlander	2.0L L4 F/I	33-2105	
Outlander	2.4L L4 F/I	33-2105	HP-1008
Pajero III	3.2L L4 DSL	33-2164	
Pajero Sport	2.5L L4 DSL	38-9207	
2003 MITSUBISHI			
Diamante	3.5L V6 F/I	33-2151	HP-1010
Eclipse	2.4L L4 F/I	33-2072 ♦	HP-1010
Eclipse	3.0L V6 F/I	33-2072 ♦	HP-1004
Eclipse GT	3.0L V6 F/I	33-2072 ♦	HP-1004
Galant	2.4L L4 F/I	33-2072	HP-1010
Galant	3.0L V6 F/I	33-2072	HP-1004
Galant IV	2.4L L4 F/I	33-2794	HP-1010
Galant VI	2.0L L4 F/I	33-2794	
Galant VI	2.5L V6 F/I	33-2794	
Lancer	1.3L L4 F/I - from 10/03	33-2105	
Lancer	1.3L L4 F/I - To 9/03	33-2074	
Lancer	1.6L L4 F/I - from 10/03	33-2105	
Lancer	1.6L L4 F/I - To 9/03	33-2074	
Lancer	2.0L L4 F/I	33-2105 ♦	HP-1010
Lancer Evolution	2.0L L4 F/I	33-2105 ♦	HP-1008
Lancer V	1.6L L4 F/I - from 10/03	33-2105	
Lancer V	1.6L L4 F/I - To 9/03	33-2074	
Lancer VI	1.3L L4 F/I - from 10/03	33-2105	
2003 MITSUBISHI			
Lancer VI	1.3L L4 F/I - To 9/03	33-2074	
Lancer VI	1.6L L4 F/I - from 10/03	33-2105	
Lancer VI	1.6L L4 F/I - To 9/03	33-2074	
Lancer VI	2.0L L4 F/I	33-2105	HP-1010
Magna	3.5L V6 F/I - exc. LPG	33-2151	
Montero	3.8L V6 F/I	33-2164	HP-1004
Montero Sport	3.0L V6 F/I	33-2045	HP-1004
Montero Sport	3.5L V6 F/I	33-2112	HP-1004
Outlander	2.0L L4 F/I	33-2105	
Outlander	2.4L L4 F/I	33-2105	HP-1008
2002 MITSUBISHI			
Diamante	3.5L V6 F/I	33-2151	HP-1010
Eclipse	2.4L L4 F/I	33-2072 ♦	HP-1010
Eclipse	3.0L V6 F/I	33-2072 ♦	HP-1004
Galant	2.4L L4 F/I	33-2072	HP-1010
Galant	3.0L V6 F/I	33-2072	HP-1004
Galant IV	2.4L L4 F/I	33-2794	HP-1010
Galant VI	2.0L L4 F/I	33-2794	
Galant VI	2.5L V6 F/I	33-2794	
Lancer	2.0L L4 F/I	33-2105 ♦	HP-1010
Lancer V	1.6L L4 F/I	33-2074	
Lancer VI	1.3L L4 F/I	33-2074	
Lancer VI	1.6L L4 F/I	33-2074	
Lancer VI	2.0L L4 F/I	33-2105	HP-1010
Mirage	1.5L L4 F/I	33-2105	HP-1010
Mirage	1.8L L4 F/I	33-2105	HP-1010
Montero	3.5L V6 F/I	33-2164	HP-1004
Montero Sport	3.0L V6 F/I	33-2045	HP-1004
Montero Sport	3.5L V6 F/I	33-2112	HP-1004
Pajero Classic	2.5L L4 DSL	38-9207	
Pajero III	3.2L L4 DSL	33-2164	
Pajero III	3.5L V6 DSL	33-2164	
Pajero Sport	2.5L L4 DSL	38-9207	
Pajero Sport	3.0L V6 F/I	33-2045	
2001 MITSUBISHI			
Diamante	3.5L V6 F/I	33-2151	HP-1010
Eclipse	2.4L L4 F/I	33-2072 ♦	HP-1010
Eclipse	3.0L V6 F/I	33-2072 ♦	HP-1004
Galant	2.4L L4 F/I	33-2072	HP-1010
Galant	3.0L V6 F/I	33-2072	HP-1004
Galant IV	2.4L L4 F/I	33-2794	HP-1010
Galant VI	2.0L L4 F/I	33-2794	
Galant VI	2.5L V6 F/I	33-2794	
L200	2.5L L4 DSL	38-9207 ♦	
Lancer VI	1.6L L4 F/I	33-2074	
Lancer VI	2.0L L4 F/I	33-2105	
Mirage	1.5L L4 F/I	33-2105	HP-1010
Mirage	1.8L L4 F/I	33-2105	HP-1010
Montero	3.5L V6 F/I	33-2164	HP-1004
Montero Sport	3.0L V6 F/I	33-2045	HP-1004
Montero Sport	3.5L V6 F/I	33-2112	HP-1004
Pajero III	3.5L V6 DSL	33-2164	
Pajero Sport	2.5L L4 DSL	38-9207	
2000 MITSUBISHI			
Diamante	3.5L V6 F/I	33-2151	HP-1010
Eclipse	2.4L L4 F/I	33-2072 ♦	HP-1010
Eclipse	3.0L V6 F/I	33-2072 ♦	HP-1004
Galant	2.4L L4 F/I	33-2072	HP-1010
Galant	3.0L V6 F/I	33-2072	HP-1004
Galant IV	2.4L L4 F/I	33-2794	HP-1010
Galant VI	2.0L L4 F/I	33-2794	
Galant VI	2.5L V6 F/I	33-2794	

*Indicates 2 filters required ♦ - Intake kit available - see page 80 Applications updated daily at knfilters.com

Vehicle	Engine Type	Air Filter	Oil Filter
2000 MITSUBISHI			
L200	2.5L L4 DSL	38-9207	
Lancer	1.8L L4 F/I	33-2074	HP-1010
Lancer VI	1.3L L4 F/I	33-2074	
Lancer VI	1.6L L4 F/I	33-2074	
Lancer VI	2.0L L4 F/I	33-2105	
Mirage	1.5L L4 F/I	33-2105	HP-1010
Mirage	1.8L L4 F/I	33-2105	HP-1010
Montero	3.5L V6 F/I	33-2112	HP-1004
Montero Sport	3.0L V6 F/I	33-2045	HP-1004
Montero Sport	3.5L V6 F/I	33-2112	HP-1004
Pajero II	2.5L L4 DSL	E-2871	
Pajero II	3.0L V6 F/I	33-2112	
Pajero II	3.5L V6 F/I	33-2112	
Pajero III	3.2L L4 DSL	33-2164	
Pajero III	3.5L V6 DSL	33-2164	
Pajero Sport	2.5L L4 DSL	38-9207	
1999 MITSUBISHI			
3000GT	3.0L V6 F/I	33-2045 ♦	HP-1004
Diamante	3.5L V6 F/I	33-2151	HP-1010
Eclipse	2.0L L4 F/I	33-2072	
		33-2072 ♦	
Eclipse	2.0L L4 F/I - exc. Turbo	33-2072	HP-2004
Eclipse	2.0L L4 F/I - Turbo	33-2072	HP-1010
Eclipse	2.4L L4 F/I	33-2072	HP-1010
Eclipse II	2.0L L4 F/I	33-2072	
Eclipse II	2.0L L4 F/I - exc. Turbo	33-2072	HP-2004
Eclipse II	2.0L L4 F/I - Turbo	33-2072	HP-1010
Eclipse II	2.4L L4 F/I	33-2072	HP-1010
Galant	2.4L L4 F/I	33-2072	HP-1010
Galant	3.0L V6 F/I	33-2072	HP-1004
Galant IV	2.4L L4 F/I	33-2794	HP-1010
Galant VI	2.0L L4 F/I	33-2794	
Galant VI	2.5L V6 F/I	33-2794	
Mirage	1.5L L4 F/I	33-2105	HP-1010
Mirage	1.8L L4 F/I	33-2105	HP-1010
Montero	3.5L V6 F/I	33-2112	HP-1004
Montero Sport	2.4L L4 F/I	33-2045	HP-1010
Montero Sport	3.0L V6 F/I	33-2045	HP-1004
Montero Sport	3.5L V6 F/I	33-2112	HP-1004
Pajero II	2.8L L4 DSL	E-2871	
Pajero II	3.0L V6 F/I	33-2112	
1998 MITSUBISHI			
3000GT	3.0L V6 F/I	33-2045 ♦	HP-1004
Diamante	3.5L V6 F/I	33-2151	HP-1010
Eclipse	2.0L L4 F/I	33-2072	
		33-2072 ♦	
Eclipse	2.0L L4 F/I - exc. Turbo	33-2072	HP-2004
Eclipse	2.0L L4 F/I - Turbo	33-2072	HP-1010
Eclipse	2.4L L4 F/I	33-2072	HP-1010
Eclipse II	2.0L L4 F/I	33-2072	
Eclipse II	2.0L L4 F/I - exc. Turbo	33-2072	HP-2004
Eclipse II	2.0L L4 F/I - Turbo	33-2072	HP-1010
Eclipse II	2.4L L4 F/I	33-2072	HP-1010
Galant	2.0L L4 F/I	33-2147	
Galant	2.4L L4 F/I	33-2072	HP-1010
L200	2.5L L4 DSL	38-9207	
Lancer V	1.6L L4 F/I	33-2074	
Lancer VI	1.3L L4 F/I	33-2074	
Lancer VI	1.6L L4 F/I	33-2074	
Mirage	1.5L L4 F/I	33-2105	HP-1010
Mirage	1.8L L4 F/I	33-2105	HP-1010
Montero	3.5L V6 F/I	33-2112	HP-1004
Montero Sport	2.4L L4 F/I	33-2045	HP-1010
Montero Sport	3.0L V6 F/I	33-2045	HP-1004
Pajero II	2.5L L4 DSL	E-2871	
Pajero II	2.8L L4 DSL	E-2871	
Pajero II	3.0L V6 F/I	33-2112	
Pajero II	3.5L V6 F/I	33-2112	
Pajero Sport	3.0L V6 F/I	33-2045	
1997 MITSUBISHI			
3000GT	3.0L V6 F/I	33-2045 ♦	HP-1004
Diamante	3.5L V6 F/I	33-2151	HP-1010
Eclipse	2.0L L4 F/I	33-2072	
		33-2072 ♦	
Eclipse	2.0L L4 F/I - exc. Turbo	33-2072	HP-2004
Eclipse	2.0L L4 F/I - Turbo	33-2072	HP-1010
Eclipse	2.4L L4 F/I	33-2072	HP-1010
Eclipse II	2.0L L4 F/I	33-2072	
Eclipse II	2.0L L4 F/I - exc. Turbo	33-2072	HP-2004
Eclipse II	2.0L L4 F/I - Turbo	33-2072	HP-1010
Galant	2.4L L4 F/I	33-2072	HP-1010
Galant VI	2.0L L4 F/I	33-2794	
Galant VI	2.5L V6 F/I	33-2794	HP-1004
L200	2.5L L4 DSL	38-9207	
Lancer V	1.6L L4 F/I	33-2074	
Lancer VI	1.3L L4 F/I	33-2074	
Lancer VI	1.6L L4 F/I	33-2074	
Mirage	1.5L L4 F/I	33-2105	HP-1010
Mirage	1.8L L4 F/I	33-2105	HP-1010
Montero	3.5L V6 F/I	33-2112	HP-1004
Montero Sport	2.4L L4 F/I	33-2045	HP-1010
Montero Sport	3.0L V6 F/I	33-2045	HP-1004
Pajero II	2.5L L4 DSL	E-2871	
Pajero II	2.8L L4 DSL	E-2871	
Pajero II	3.0L V6 F/I	33-2112	
Pajero II	3.5L V6 F/I	33-2112	
Pajero Sport	2.5L L4 DSL	38-9207	
1996 MITSUBISHI			
3000GT	3.0L V6 F/I	33-2045 ♦	HP-1004
Eclipse	2.0L L4 F/I	33-2072	
		33-2072 ♦	
Eclipse	2.0L L4 F/I - exc. Turbo	33-2072	HP-2004
Eclipse	2.0L L4 F/I - Turbo	33-2072	HP-1010
Eclipse	2.4L L4 F/I	33-2072	HP-1010
Eclipse II	2.0L L4 F/I	33-2072	
Eclipse II	2.0L L4 F/I - exc. Turbo	33-2072	HP-2004
Eclipse II	2.0L L4 F/I - Turbo	33-2072	HP-1010
Galant	2.4L L4 F/I	33-2072	HP-1010
Mirage	1.5L L4 F/I	33-2074	HP-1010
Mirage	1.8L L4 F/I	33-2074	HP-1010
Montero	3.0L V6 F/I	33-2112	HP-1004
Montero	3.5L V6 F/I	33-2112	HP-1004
Pajero II	2.5L L4 DSL	E-2871	
Pajero II	2.8L L4 DSL	E-2871	
Pajero II	3.0L V6 F/I	33-2112	
Pajero II	3.5L V6 F/I	33-2112	
1995 MITSUBISHI			
3000GT	3.0L V6 F/I	33-2045 ♦	HP-1004
Diamante	3.0L V6 F/I	33-2045	HP-1004
Eclipse	2.0L L4 F/I	33-2072	
		33-2072 ♦	
Eclipse	2.0L L4 F/I - exc. Turbo	33-2072	HP-2004
Eclipse	2.0L L4 F/I - Turbo	33-2072	HP-1010
Eclipse I	2.0L L4 F/I	E-2875	
Eclipse II	2.0L L4 F/I	33-2072	
Eclipse II	2.0L L4 F/I - exc. Turbo	33-2072	HP-2004

*Indicates 2 filters required ♦ - Intake kit available - see page 80 Applications updated daily at knfilters.com

Vehicle	Engine Type	Air Filter	Oil Filter
1995 MITSUBISHI			
Eclipse II	2.0L L4 F/I - Turbo	33-2072	HP-1010
Galant	2.4L L4 F/I	33-2072	HP-1010
L200	2.5L L4 DSL	38-9207	
Mighty Max	2.4L L4 F/I	33-2045	HP-1010
Mirage	1.5L L4 F/I	33-2074	HP-1010
Mirage	1.8L L4 F/I	33-2074	HP-1010
Montero	3.0L V6 F/I	33-2112	HP-1004
Montero	3.5L V6 F/I	33-2112	HP-1004
Pajero II	2.5L L4 DSL	E-2871	
Pajero II	2.8L L4 DSL	E-2871	
Pajero II	3.0L V6 F/I - 150BHP	33-2045	
Pajero II	3.0L V6 F/I - Exc., 150BHP	33-2112	
Pajero II	3.5L V6 F/I	33-2112	
1994 MITSUBISHI			
3000GT	3.0L V6 F/I	33-2045 ♦	HP-1004
Diamante	3.0L V6 F/I	33-2045	HP-1004
Eclipse	1.8L L4 F/I	E-2875	HP-1010
Eclipse	2.0L L4 F/I	E-2875	HP-1010
Eclipse I	2.0L L4 F/I	E-2875	HP-1010
Galant	2.4L L4 F/I	33-2072	HP-1010
Galant V	2.0L L4 F/I	33-2072	
Mighty Max	2.4L L4 F/I	33-2045	HP-1010
Mirage	1.5L L4 F/I	33-2074	HP-1010
Montero	3.0L V6 F/I	33-2045	HP-1004
Montero	3.5L V6 F/I	33-2112	HP-1004
Pajero II	2.8L L4 DSL	E-2871	
1993 MITSUBISHI			
3000GT	3.0L V6 F/I	33-2045 ♦	HP-1004
Diamante	3.0L V6 F/I	33-2045	HP-1004
Eclipse	1.8L L4 F/I	E-2875	HP-1010
Eclipse	2.0L L4 F/I	E-2875	HP-1010
		E-2875 ♦	HP-1010
Eclipse I	2.0L L4 F/I	E-2875	HP-1010
Mighty Max	2.4L L4 F/I	33-2045	HP-1005
Mighty Max	3.0L V6 F/I	33-2045	HP-1005
Mirage	1.5L L4 F/I	33-2074	HP-1010
Mirage	1.8L L4 F/I	33-2074	HP-1010
Montero	3.0L V6 F/I	33-2045	HP-1004
Pajero II	2.5L L4 DSL	E-2871	
Pajero II	3.0L V6 F/I	33-2045	
1992 MITSUBISHI			
3000GT	3.0L V6 F/I	33-2045 ♦	HP-1004
Colt III	1.3L L4 F/I	E-9199	
Diamante	3.0L V6 F/I	33-2045	HP-1004
Eclipse	1.8L L4 F/I	E-2875	HP-1004
Eclipse	2.0L L4 F/I	E-2875	HP-1005
		E-2875 ♦	HP-1005
Eclipse I	2.0L L4 F/I	E-2875	HP-1005
Galant	2.0L L4 F/I	E-2875	HP-1005
Galant IV	2.0L L4 F/I	E-2875	
Galant V	2.0L L4 F/I	33-2072	
Lancer IV	1.3L L4 F/I	E-9199	
Mighty Max	2.4L L4 F/I	33-2045	HP-1005
Montero	3.0L V6 F/I	33-2045	HP-1004
Pajero II	2.5L L4 DSL	E-2871	
1991 MITSUBISHI			
3000GT	3.0L V6 F/I	33-2045 ♦	HP-1004
Colt III	1.3L L4 F/I	E-9199	
Eclipse	1.8L L4 F/I	E-2875	HP-1004
Eclipse	2.0L L4 F/I	E-2875	HP-1005
		E-2875 ♦	HP-1005
1991 MITSUBISHI			
Eclipse I	2.0L L4 F/I	E-2875	HP-1005
Galant	2.0L L4 F/I	E-2875	HP-1005
Galant IV	1.8L L4 F/I	E-2874	HP-1004
Galant IV	2.0L L4 F/I	E-2875	
Lancer IV	1.3L L4 F/I	E-9199	
Mighty Max	2.4L L4 F/I	33-2045	HP-1005
Mirage	1.5L L4 F/I	E-2875	HP-1010
Montero	3.0L V6 F/I	E-2875	HP-1005
Pajero I	2.5L L4 DSL	E-2871	
Pajero II	2.5L L4 DSL	E-2871	
1990 MITSUBISHI			
Eclipse	1.8L L4 F/I	E-2875	HP-1004
Eclipse	2.0L L4 F/I	E-2875	HP-1005
		E-2875 ♦	HP-1005
Galant	2.0L L4 F/I	E-2875	HP-1005
Galant IV	2.0L L4 F/I	E-2875	
Mighty Max	2.4L L4 F/I		HP-1005
Montero	3.0L V6 F/I	E-2875	HP-1005
1989 MITSUBISHI			
Montero	2.6L L4 CARB	E-2723	HP-1005
Pajero I	2.5L L4 DSL	E-2871	
Pajero I	2.6L L4 F/I	E-2723	
Starion	2.6L L4 F/I	E-2873	HP-1005
1988 MITSUBISHI			
Mighty Max	2.0L L4 CARB	E-2810	HP-1005
Montero	2.6L L4 CARB	E-2723	HP-1005
Starion	2.6L L4 F/I	E-2873	HP-1005
1987 MITSUBISHI			
L300	2.5L L4 DSL	E-4810	
Mighty Max	2.0L L4 CARB	E-2810	HP-1005
Mighty Max	2.6L L4 CARB	E-2810	HP-1005
Montero	2.6L L4 CARB	E-2723	HP-1005
Starion	2.6L L4 F/I	E-2873	HP-1005
1986 MITSUBISHI			
Mighty Max	2.0L L4 CARB	E-2810	HP-1005
Starion	2.6L L4 F/I	E-2873	HP-1005
1983 MITSUBISHI			
Cordia	1.8L L4 CARB	E-2874	HP-1005
Lancer I	2.0L L4 F/I	E-2873	
Montero	2.6L L4 CARB	E-2725	HP-1005
2008 MOTO GUZZI			
Breva 1200 Sport	1100	AL-1001	
Breva V 1100	1100	AL-1001	
Norge 1200	1200	AL-1001	
2007 MOTO GUZZI			
Breva 850	850	AL-1001	
Breva V 1100	1100	AL-1001	
California Vintage	1100	CG-9002	
Norge 1200	1200	AL-1001	
2006 MOTO GUZZI			
Breva 850	850	AL-1001	
Breva V 1100	1100	AL-1001	
California Vintage	1100	CG-9002	
2005 MOTO GUZZI			
Breva V 1100	1100	AL-1001	
1998 MOTO GUZZI			
V10 Centauro	1000	CG-9002	

*Indicates 2 filters required ♦ - Intake kit available - see page 80 Applications updated daily at knfilters.com

Vehicle	Engine Type	Air Filter	Oil Filter
1997 MOTO GUZZI			
California 1100	1064	CG-9002	
Daytona 1000	1000	CG-9002	
Sport 1100	1064	CG-9002	
1996 MOTO GUZZI			
California 1100	1064	CG-9002	
Sport 1100	1064	CG-9002	
1995 MOTO GUZZI			
California 1100	1064	CG-9002	
Sport 1100	1064	CG-9002	
1994 MOTO GUZZI			
California 1100	1064	CG-9002	
1993 MOTO GUZZI			
Daytona 1000	1000	CG-9002	
1989 MOTO GUZZI			
V1000 California III	1000	MG-0001	
1984 MOTO GUZZI			
V1000 California II	1000	MG-0001	
1983 MOTO GUZZI			
V1000 G5	1000	MG-2640	
V1000 LeMans III	1000	MG-0001	
1982 MOTO GUZZI			
V1000 G5	1000	MG-2640	
1981 MOTO GUZZI			
V1000 G5	1000	MG-2640	
1976 MOTO GUZZI			
850	850	MG-0200	
2009 MV AGUSTA			
MV Agusta Brutale	1078		KN-204 KN-204C
MV Agusta F4 RR	1078		KN-204 KN-204C
2008 MV AGUSTA			
MV Agusta F4 R 312	1078		KN-204 KN-204C
MV Agusta F4 R 312 1 plus 1	1078		KN-204 KN-204C
2001 MZ			
Skorpion 660	660		KN-145
2013 NISSAN			
370Z	3.7L V6 F/I	33-2399*	HP-1008
Altima	2.5L L4 F/I		HP-1008
Altima	3.5L V6 F/I	33-2031-2	HP-1008
Altima Coupe	2.5L L4 F/I	33-2374	HP-1008
Altima Hybrid	2.5L L4 F/I		HP-1008
Frontier	2.5L L4 F/I	33-2324	HP-1008
Frontier	4.0L V6 F/I	33-2286	HP-1010
GT-R	3.8L V6 F/I	33-2413	HP-1010
Juke	1.6L L4 F/I	33-2409	HP-1008
Maxima	3.5L V6 F/I	33-2031-2 ♦	HP-1008
Murano	3.5L V6 F/I	33-2031-2	HP-1008
Navara	2.5L L4 DSL - OEM 16500EB30B	33-2080	
Pathfinder	2.5L L4 DSL - OEM 16546EB300	33-2080	
Pathfinder	3.0L V6 DSL - OEM 16546EB300	33-2080	
Pathfinder	3.5L V6 F/I	33-2031-2	

Vehicle	Engine Type	Air Filter	Oil Filter
2013 NISSAN			
Rogue	2.5L L4 F/I	33-2409	HP-1008
Sentra	1.8L L4 F/I	33-2409	
Titan	5.6L V8 F/I	33-2286	HP-1008
Versa	1.6L L4 F/I	33-2479	HP-1008
Xterra	4.0L V6 F/I	33-2286	HP-1010
2012 NISSAN			
370Z	3.7L V6 F/I	33-2399* ♦	HP-1008
370Z Nismo	3.7L V6 F/I	33-2399* ♦	HP-1008
Altima	2.5L L4 F/I	33-2374 ♦	HP-1008
Altima	3.5L V6 F/I	33-2031-2 ♦	HP-1008
Armada	5.6L V8 F/I	33-2286 ♦	HP-1010
Cube	1.6L L4 F/I	33-2375	
Cube	1.8L L4 F/I	33-2375	HP-1008
Frontier	2.5L L4 F/I	33-2324	HP-1008
Frontier	4.0L V6 F/I	33-2286 ♦	HP-1010
Grand Livina	1.5L L4 F/I	33-2375	
GT-R	3.8L V6 F/I	33-2413	HP-1008
Juke	1.5L L4 DSL	33-2927	
Juke	1.6L L4 F/I	33-2409	HP-1008
Livina	1.5L L4 F/I	33-2375	
Maxima	3.5L V6 F/I	33-2031-2 ♦	HP-1008
Micra	1.2L L4 F/I - exc. Turbo	33-2409	
Murano	3.5L V6 F/I	33-2031-2	HP-1008
Navara	3.0L V6 DSL - OEM 16546EB300	33-2080	
NV1500	4.0L V6 F/I	33-2286	HP-1010
NV2500 HD	4.0L V6 F/I	33-2286	HP-1010
NV2500 HD	5.6L V8 F/I	33-2286	HP-1010
NV3500 HD	5.6L V8 F/I	33-2286	HP-1010
Pathfinder	3.0L V6 DSL	33-2080	
Pathfinder	4.0L V6 F/I	33-2286 ♦	HP-1010
Pathfinder	5.6L V8 F/I	33-2286 ♦	HP-1010
Pixo	1.0L L3 F/I	33-2968	
Qashqai	1.6L L4 DSL	33-2944	
Qashqai	1.6L L4 F/I	33-2944	
Qashqai	2.0L L4 DSL	33-2944	
Qashqai	2.0L L4 F/I	33-2944	
Quest	3.5L V6 F/I	33-2031-2	HP-1008
Rogue	2.5L L4 F/I	33-2409	HP-1008
Sentra	2.0L L4 F/I	33-2376	HP-1008
Sentra	2.5L L4 F/I	33-2409 ♦	HP-1008
Titan	5.6L V8 F/I	33-2286 ♦	HP-1008
Versa	1.6L L4 F/I	33-2479	HP-1008
Versa	1.8L L4 F/I	33-2375	HP-1008
Xterra	4.0L V6 F/I	33-2286 ♦	HP-1010
X-Trail	2.0L L4 DSL	33-2944	
2011 NISSAN			
370Z	3.7L V6 F/I	33-2399* ♦	HP-1008
370Z Nismo	3.7L V6 F/I	33-2399* ♦	HP-1008
Altima	2.5L L4 F/I	33-2374 ♦	HP-1008
Altima	3.5L V6 F/I	33-2031-2 ♦	HP-1008
Armada	5.6L V8 F/I	33-2286 ♦	HP-1010
Cube	1.6L L4 F/I	33-2375	
Cube	1.8L L4 F/I	33-2375	HP-1008
Frontier	2.5L L4 F/I	33-2324	HP-1008
Frontier	4.0L V6 F/I	33-2286 ♦	HP-1010
GT-R	3.8L V6 F/I	33-2413	HP-1008
Juke	1.5L L4 DSL	33-2927	
Juke	1.6L L4 F/I	33-2409	HP-1008
Livina	1.5L L4 F/I	33-2375	
Maxima	3.5L V6 F/I	33-2031-2 ♦	HP-1008
Micra	1.2L L4 F/I - exc. Turbo	33-2409	
Murano	3.5L V6 F/I	33-2031-2	HP-1008

*Indicates 2 filters required ♦ - Intake kit available - see page 80 Applications updated daily at knfilters.com

Vehicle	Engine Type	Air Filter	Oil Filter
2011 NISSAN			
Navara	2.5L L4 DSL - OEM 16546EB300	33-2080	
Navara	2.5L L4 DSL - OEM 16546EB70A	33-2980	
Pathfinder	2.5L L4 DSL - OEM 16546EB300	33-2080	
Pathfinder	3.0L V6 DSL	33-2080	
Pathfinder	4.0L V6 F/I	33-2286 ♦	HP-1010
Pathfinder	5.6L V8 F/I	33-2286 ♦	HP-1010
Pixo	1.0L L3 F/I	33-2968	
Qashqai	2.0L L4 DSL	33-2944	
Qashqai	2.0L L4 F/I	33-2944	
Quest	3.5L V6 F/I	33-2031-2	HP-1008
Rogue	2.5L L4 F/I	33-2409	HP-1008
Sentra	2.0L L4 F/I	33-2376	HP-1008
Sentra	2.5L L4 F/I	33-2409 ♦	HP-1008
Tiida	1.6L L4 F/I	33-2375	
Tiida	1.8L L4 F/I	33-2375	
Titan	5.6L V8 F/I	33-2286 ♦	HP-1010
Versa	1.6L L4 F/I	33-2375	HP-1008
Versa	1.8L L4 F/I	33-2375	HP-1008
Xterra	4.0L V6 F/I	33-2286 ♦	HP-1010
X-Trail	2.0L L4 DSL	33-2944	
X-Trail	2.0L L4 F/I	33-2944	
2010 NISSAN			
370Z	3.7L V6 F/I	33-2399* ♦	HP-1008
370Z Nismo	3.7L V6 F/I	33-2399* ♦	HP-1008
Altima	2.5L L4 F/I	33-2374 ♦	HP-1008
Altima	3.5L V6 F/I	33-2031-2 ♦	HP-1008
Altima Hybrid	2.5L L4 F/I	33-2374	HP-1010
Armada	5.6L V8 F/I	33-2286 ♦	HP-1010
Cube	1.6L L4 F/I	33-2375	
Cube	1.8L L4 F/I	33-2375 ♦	HP-1008
Frontier	2.5L L4 F/I	33-2324	HP-1008
Frontier	4.0L V6 F/I	33-2286 ♦	HP-1010
GT-R	3.8L V6 F/I	33-2413	HP-1010
Juke	1.5L L4 DSL	33-2927	
Juke	1.6L L4 F/I	33-2409	
Livina	1.5L L4 F/I	33-2375	
Maxima	3.5L V6 F/I	33-2031-2 ♦	HP-1008
Micra	1.2L L4 F/I	33-2060 ♦	
Micra	1.4L L4 F/I	33-2060	
Murano	3.5L V6 F/I	33-2031-2	HP-1008
Navara	2.5L L4 DSL - OEM 16546EB300	33-2080	
Navara	2.5L L4 DSL - OEM 16546EB70A	33-2980	
Pathfinder	2.5L L4 DSL	33-2080	
Pathfinder	3.0L V6 DSL	33-2080	
Pathfinder	4.0L V6 F/I	33-2286 ♦	HP-1010
Pathfinder	5.6L V8 F/I	33-2286 ♦	HP-1010
Patrol II	3.0L L6 DSL	E-9267	
Pixo	1.0L L3 F/I	33-2968	
Qashqai	2.0L L4 DSL	33-2944	
Qashqai	2.0L L4 F/I	33-2944	
Quest	3.5L V6 F/I	33-2031-2	
Rogue	2.5L L4 F/I	33-2409	HP-1008
Sentra	2.0L L4 F/I	33-2376	HP-1008
Sentra	2.5L L4 F/I	33-2409 ♦	HP-1008
Tiida	1.6L L4 F/I	33-2375	
Tiida	1.8L L4 F/I	33-2375	HP-1008
Titan	5.6L V8 F/I	33-2286 ♦	HP-1010
Tsura	1.6L L4 F/I		HP-2008
Versa	1.6L L4 F/I	33-2375	HP-1008
Versa	1.8L L4 F/I	33-2375	HP-1008

Vehicle	Engine Type	Air Filter	Oil Filter
2010 NISSAN			
Xterra	4.0L V6 F/I	33-2286 ♦	HP-1010
X-Trail	2.0L L4 DSL	33-2944	
X-Trail	2.0L L4 F/I	33-2944	
X-Trail	2.5L L4 F/I	33-2031-2	HP-1010
2009 NISSAN			
350Z	3.5L V6 F/I	33-2399*	HP-1008
370Z	3.7L V6 F/I	33-2399* ♦	HP-1008
370Z Nismo	3.7L V6 F/I	33-2399* ♦	HP-1008
Altima	2.5L L4 F/I	33-2374 ♦	HP-1008
Altima	3.5L V6 F/I	33-2031-2 ♦	HP-1008
Altima Hybrid	2.5L L4 F/I	33-2374	HP-1010
Armada	5.6L V8 F/I	33-2286 ♦	HP-1010
Cube	1.8L L4 F/I	33-2375 ♦	HP-1008
Frontier	2.5L L4 F/I	33-2324	HP-1008
Frontier	4.0L V6 F/I	33-2286 ♦	HP-1010
Grand Livina	1.8L L4 F/I	33-2375	
GT-R	3.8L V6 F/I	33-2413	HP-1010
Livina	1.5L L4 F/I	33-2375	
Maxima	3.5L V6 F/I	33-2031-2 ♦	HP-1008
Murano	3.5L V6 F/I	33-2031-2	HP-1008
Navara	2.5L L4 DSL - OEM 16546EB300	33-2080 ♦	
Navara	2.5L L4 DSL - OEM 16546EB70A	33-2980 ♦	
Pathfinder	2.5L L4 DSL	33-2080	
Pathfinder	4.0L V6 F/I	33-2286 ♦	HP-1010
Pathfinder	5.6L V8 F/I	33-2286 ♦	HP-1010
Patrol II	3.0L L6 DSL	E-9267	
Quest	3.5L V6 F/I	33-2031-2	HP-1008
Rogue	2.5L L4 F/I	33-2409	HP-1008
Sentra	2.0L L4 F/I	33-2376	HP-1008
Sentra	2.5L L4 F/I	33-2409 ♦	HP-1008
Tiida	1.6L L4 F/I	33-2375	
Titan	5.6L V8 F/I	33-2286 ♦	HP-1010
Versa	1.6L L4 F/I		HP-1008
Versa	1.8L L4 F/I	33-2375	HP-1008
Xterra	4.0L V6 F/I	33-2286 ♦	HP-1010
X-Trail	2.0L L4 DSL	33-2944	
X-Trail	2.0L L4 F/I	33-2944	
X-Trail	2.5L L4 F/I	33-2031-2	
2008 NISSAN			
350Z	3.5L V6 F/I	33-2399* ♦	HP-1008
Altima	2.5L L4 F/I	33-2374 ♦	HP-1008
Altima	3.5L V6 F/I	33-2031-2 ♦	HP-1008
Altima Hybrid	2.5L L4 F/I	33-2374	HP-1010
Armada	5.6L V8 F/I	33-2286 ♦	HP-1010
D21 Pickup	2.4L L4 F/I		HP-1010
Frontier	2.5L L4 F/I	33-2324	HP-1008
Frontier	4.0L V6 F/I	33-2286 ♦	HP-1010
Maxima	3.5L V6 F/I	33-2031-2 ♦	HP-1008
Micra	1.0L L4 F/I	33-2060 ♦	
Micra	1.2L L4 F/I	33-2060 ♦	
Micra	1.4L L4 F/I	33-2060 ♦	
Murano	3.5L V6 F/I	33-2031-2	HP-1008
Navara	2.5L L4 DSL - OEM 16546EB300	33-2080 ♦	
Navara	2.5L L4 DSL - OEM 16546EB70A	33-2980 ♦	
Note	1.4L L4 F/I	33-2060	
Pathfinder	2.5L L4 DSL	33-2080	
Pathfinder	4.0L V6 F/I	33-2286 ♦	HP-1010
Pathfinder	5.6L V8 F/I	33-2286 ♦	HP-1010
Patrol II	3.0L L6 DSL	E-9267	
Qashqai	2.0L L4 DSL	33-2944	

*Indicates 2 filters required ♦ - Intake kit available - see page 80 Applications updated daily at knfilters.com

Vehicle	Engine Type	Air Filter	Oil Filter
2008 NISSAN			
Qashqai	2.0L L4 F/I	33-2944	
Quest	3.5L V6 F/I	33-2031-2	HP-1008
Rogue	2.5L L4 F/I	33-2409	HP-1008
Sentra	2.0L L4 F/I	33-2376	HP-1008
Sentra	2.5L L4 F/I	33-2409 ♦	HP-1008
Tiida	1.6L L4 F/I	33-2375	
Tiida	1.8L L4 F/I	33-2375	HP-1008
Titan	5.6L V8 F/I	33-2286 ♦	HP-1010
Versa	1.8L L4 F/I	33-2375	HP-1008
Xterra	4.0L V6 F/I	33-2286 ♦	HP-1010
X-Trail	2.0L L4 DSL	33-2944	
X-Trail	2.0L L4 F/I	33-2944	
X-Trail	2.5L L4 F/I	33-2031-2	HP-1008
2007 NISSAN			
350Z	3.5L V6 F/I	33-2399* ♦	HP-1008
Almera II	1.5L L4 F/I	33-2031-2	
Altima	2.5L L4 F/I	33-2374 ♦	HP-1010
Altima	3.5L V6 F/I	33-2031-2 ♦	HP-1008
Altima Hybrid	2.5L L4 F/I	33-2374	HP-1010
Armada	5.6L V8 F/I	33-2286 ♦	HP-1010
D21 Pickup	2.4L L4 F/I		HP-1010
Frontier	2.5L L4 F/I	33-2324	HP-1008
Frontier	4.0L V6 F/I	33-2286 ♦	HP-1010
Grand Livina	1.5L L4 F/I	33-2375	
Maxima	3.5L V6 F/I	33-2031-2 ♦	HP-1008
Micra	1.2L L4 F/I	33-2060 ♦	
Murano	3.5L V6 F/I	33-2031-2	HP-1008
Navara	2.5L L4 DSL - OEM 16546EB300	33-2080 ♦	
Navara	2.5L L4 DSL - OEM 16546EB70A	33-2980 ♦	
Pathfinder	2.5L L4 DSL	33-2080	
Pathfinder	4.0L V6 F/I	33-2286 ♦	HP-1010
Patrol II	3.0L L6 DSL	E-9267	
Qashqai	2.0L L4 DSL	33-2944	
Qashqai	2.0L L4 F/I	33-2944	
Quest	3.5L V6 F/I	33-2031-2	HP-1008
Sentra	2.0L L4 F/I	33-2376	HP-1008
Sentra	2.5L L4 F/I	33-2409 ♦	HP-1008
Titan	5.6L V8 F/I	33-2286 ♦	HP-1010
Versa	1.8L L4 F/I	33-2375	HP-1008
Xterra	4.0L V6 F/I	33-2286 ♦	HP-1010
X-Trail	2.0L L4 DSL	33-2944	
X-Trail	2.0L L4 F/I	33-2944	
X-Trail	2.5L L4 F/I	33-2031-2	HP-1008
2006 NISSAN			
350Z	3.5L V6 F/I	33-2031-2 ♦	HP-1008
Almera II	1.5L L4 DSL	33-2864	
Altima	2.5L L4 F/I	33-2031-2 ♦	HP-1010
Altima	3.5L V6 F/I	33-2031-2 ♦	HP-1008
Armada	5.6L V8 F/I	33-2286 ♦	HP-1010
D21 Pickup	2.4L L4 F/I		HP-1010
Frontier	2.5L L4 F/I	33-2324	HP-1008
Frontier	4.0L V6 F/I	33-2286 ♦	HP-1010
Interstar	3.0L V6 DSL	33-2891	
Maxima	3.5L V6 F/I	33-2031-2 ♦	HP-1008
Micra	1.0L L4 F/I	33-2060 ♦	
Murano	3.5L V6 F/I	33-2031-2	HP-1008
Navara	2.5L L4 DSL - OEM 16546EB300	33-2080 ♦	
Navara	2.5L L4 DSL - OEM 16546EB70A	33-2980 ♦	
Pathfinder	2.5L L4 DSL	33-2080	
Pathfinder	4.0L V6 F/I	33-2286 ♦	HP-1010
Patrol II	3.0L L6 DSL	E-9267	
Quest	3.5L V6 F/I	33-2031-2	HP-1008
Sentra	1.8L L4 F/I	33-2031-2	HP-1010
Sentra	2.5L L4 F/I	33-2031-2 ♦	HP-1010
Sentra	2.5L L4 F/I	33-2031-2 ♦	HP-1010
Titan	5.6L V8 F/I	33-2286 ♦	HP-1010
Xterra	4.0L V6 F/I	33-2286 ♦	HP-1010
X-Trail	2.0L L4 F/I	33-2031-2	
X-Trail	2.2L L4 DSL	33-2031-2	
X-Trail	2.5L L4 F/I	33-2031-2	HP-1008
2005 NISSAN			
350Z	3.5L V6 F/I	33-2031-2 ♦	HP-1008
Almera II	1.5L L4 DSL	33-2864	
Altima	2.5L L4 F/I	33-2031-2 ♦	HP-1010
Altima	3.5L V6 F/I	33-2031-2 ♦	HP-1008
Armada	5.6L V8 F/I	33-2286 ♦	HP-1010
D21 Pickup	2.4L L4 F/I		HP-1010
Frontier	2.5L L4 DSL	E-2020	
Frontier	2.5L L4 F/I	33-2324	HP-1008
Frontier	4.0L V6 F/I	33-2286 ♦	HP-1010
Maxima	2.0L V6 F/I	33-2031-2	
Maxima	3.0L V6 F/I	33-2031-2	
Maxima	3.5L V6 F/I	33-2031-2 ♦	HP-1008
Micra	1.2L L4 F/I	33-2060 ♦	
Murano	3.5L V6 F/I	33-2031-2	HP-1008
Navara	2.5L L4 DSL - OEM 16546EB300	33-2080 ♦	
Navara	2.5L L4 DSL - OEM 16546EB70A	33-2980 ♦	
Pathfinder	2.5L L4 DSL	33-2080	
Pathfinder	4.0L V6 F/I	33-2286 ♦	HP-1010
Patrol	3.0L L6 DSL	E-9267	
Quest	3.5L V6 F/I	33-2031-2	HP-1008
Sentra	1.8L L4 F/I	33-2031-2	HP-1010
Sentra	2.5L L4 F/I	33-2031-2 ♦	HP-1010
Terrano II	2.4L L4 F/I	33-2031-2	
Titan	5.6L V8 F/I	33-2286 ♦	HP-1010
Xterra	4.0L V6 F/I	33-2286 ♦	HP-1010
X-Trail	2.0L L4 F/I	33-2031-2	
X-Trail	2.2L L4 DSL	33-2031-2	
X-Trail	2.5L L4 F/I	33-2031-2	HP-1008
2004 NISSAN			
350Z	3.5L V6 F/I	33-2031-2 ♦	HP-1008
Almera II	1.5L L4 DSL	33-2864	
Altima	2.5L L4 F/I	33-2031-2 ♦	HP-1010
Altima	3.5L V6 F/I	33-2031-2 ♦	HP-1008
D21 Pickup	2.4L L4 F/I		HP-1010
D22 Pickup	2.4L L4 F/I	E-9233	
D22 Pickup	2.5L L4 DSL - exc. Turbo	E-2760	
D22 Pickup	2.5L L4 DSL - Turbo	E-9251	
Frontier	2.4L L4 F/I	E-9233	HP-1010
Frontier	2.5L L4 DSL	E-2020	
Frontier	3.3L V6 F/I	33-2031-2 ♦	HP-1010
Maxima	2.0L V6 F/I	33-2031-2	
Maxima	3.0L V6 F/I	33-2031-2	
Maxima	3.5L V6 F/I	33-2031-2 ♦	HP-1008
Micra	1.2L L4 F/I	33-2060 ♦	
Murano	3.5L V6 F/I	33-2031-2	HP-1008
Pathfinder	3.3L V6 F/I	33-2031-2	
Pathfinder	3.5L V6 F/I	33-2031-2 ♦	HP-1008
Pathfinder	5.6L V8 F/I	33-2286 ♦	HP-1010
Patrol	3.0L L6 DSL	E-9267	
Patrol II	4.2L L6 DSL	E-9267	
Primera	2.2L L4 DSL	33-2031-2	

*Indicates 2 filters required ♦ - Intake kit available - see page 80 Applications updated daily at knfilters.com

Vehicle	Engine Type	Air Filter	Oil Filter
2004 NISSAN			
Quest	3.5L V6 F/I	33-2031-2	HP-1008
Sentra	1.8L L4 F/I	33-2031-2	HP-1010
Sentra	2.5L L4 F/I	33-2031-2 ♦	HP-1010
Titan	5.6L V8 F/I	33-2286 ♦	HP-1010
Xterra	2.4L L4 F/I	E-9233	HP-1010
Xterra	3.3L V6 F/I	33-2031-2 ♦	HP-1010
X-Trail	2.5L L4 F/I	33-2031-2	
2003 NISSAN			
350Z	3.5L V6 F/I	33-2031-2 ♦	HP-1008
Altima	2.5L L4 F/I	33-2031-2 ♦	HP-1010
Altima	3.5L V6 F/I	33-2031-2	HP-1008
D22 Pickup	2.4L L4 F/I	E-9233	
D22 Pickup	2.5L L4 DSL - exc. Turbo	E-2760	
D22 Pickup	2.5L L4 DSL - Turbo	E-9251	
Frontier	2.4L L4 F/I	E-9233	HP-1010
Frontier	3.3L V6 F/I	33-2031-2 ♦	HP-1010
Maxima	2.0L V6 F/I	33-2031-2	
Maxima	3.0L V6 F/I	33-2031-2	
Maxima	3.5L V6 F/I	33-2031-2	HP-1008
Murano	3.5L V6 F/I	33-2031-2	HP-1008
Pathfinder	2.7L L6 DSL	33-2031-2	
Pathfinder	3.3L V6 F/I	33-2031-2	
Pathfinder	3.5L V6 F/I	33-2031-2 ♦	HP-1008
Patrol	3.0L L6 DSL	E-9267	
Quest	3.3L V6 F/I	33-2091-1	
Sentra	1.8L L4 F/I	33-2031-2	HP-1008
Sentra	2.5L L4 F/I	33-2031-2 ♦	HP-1010
Xterra	2.4L L4 F/I	E-9233	HP-1010
Xterra	3.3L V6 F/I	33-2031-2 ♦	HP-1010
X-Trail	2.5L L4 F/I	33-2031-2	
2002 NISSAN			
3000TD	3.0L DSL	E-2860	
Almera II	1.5L L4 DSL	33-2864	
Altima	2.5L L4 F/I	33-2031-2 ♦	HP-1010
Altima	3.5L V6 F/I	33-2031-2	HP-1008
Frontier	2.4L L4 F/I	E-9233	HP-1010
Frontier	3.3L V6 F/I	33-2031-2 ♦	HP-1010
Maxima	2.0L V6 F/I	33-2031-2	
Maxima	3.0L V6 F/I	33-2031-2	
Maxima	3.5L V6 F/I	33-2031-2	HP-1008
Pathfinder	2.7L L6 DSL	33-2031-2	
Pathfinder	3.3L V6 F/I	33-2031-2	
Pathfinder	3.5L V6 F/I	33-2031-2 ♦	HP-1008
Patrol	3.0L L6 DSL	E-9267	
Patrol	4.5L L6 F/I	E-9266	
Quest	3.3L V6 F/I	33-2091-1	HP-1010
Sentra	1.8L L4 F/I	33-2031-2	HP-1008
Sentra	2.5L L4 F/I	33-2031-2 ♦	HP-1010
Xterra	2.4L L4 F/I	E-9233	HP-1010
Xterra	3.3L V6 F/I	33-2031-2 ♦	HP-1010
2001 NISSAN			
Altima	2.4L L4 F/I	33-2031-2	HP-1010
Frontier	2.4L L4 F/I	E-9233	HP-1010
Frontier	3.3L V6 F/I	33-2031-2 ♦	HP-1010
Maxima	2.0L V6 F/I	33-2031-2	
Maxima	3.0L V6 F/I	33-2031-2	HP-1010
Pathfinder	2.7L L6 DSL	33-2031-2	
Pathfinder	3.3L V6 F/I	33-2031-2	
Pathfinder	3.5L V6 F/I	33-2031-2 ♦	HP-1010
Patrol	3.0L L6 DSL	E-9267	
Primastar	1.9L L4 DSL	33-2215	
Quest	3.3L V6 F/I	33-2091-1	HP-1010
2001 NISSAN			
Sentra	1.8L L4 F/I	33-2031-2	HP-1008
Sentra	2.0L L4 F/I	33-2031-2	HP-1008
Xterra	2.4L L4 F/I	E-9233	HP-1010
Xterra	3.3L V6 F/I	33-2031-2 ♦	HP-1010
2000 NISSAN			
Altima	2.4L L4 F/I	33-2031-2	HP-1010
Frontier	2.4L L4 F/I	E-9233	HP-1010
Frontier	3.3L V6 F/I	33-2031-2 ♦	HP-1010
Maxima	2.0L V6 F/I	33-2031-2	
Maxima	3.0L V6 F/I	33-2031-2	HP-1010
Pathfinder	2.7L L6 DSL	33-2031-2	
Pathfinder	3.3L V6 F/I	33-2031-2	HP-1010
Pathfinder	3.5L V6 F/I	33-2031-2	
Patrol	3.0L L6 DSL	E-9267	
Patrol II	2.8L V6 DSL	E-9267	
Quest	3.3L V6 F/I	33-2091-1	HP-1010
Sentra	1.8L L4 F/I	33-2031-2	HP-1008
Sentra	2.0L L4 F/I	33-2031-2	HP-1008
Xterra	2.4L L4 F/I	E-9233	HP-1010
Xterra	3.3L V6 F/I	33-2031-2 ♦	HP-1010
1999 NISSAN			
200SX	2.0L L4 F/I	33-2031-2 ♦	
Altima	2.4L L4 F/I	33-2031-2	HP-1010
D22 Pickup	2.5L L4 DSL - Turbo	E-9251	
Frontier	2.4L L4 F/I	E-9233	HP-1010
Frontier	3.3L V6 F/I	33-2031-2 ♦	HP-1010
Maxima	2.0L V6 F/I	33-2031-2	
Maxima	3.0L V6 F/I	33-2031-2	HP-1010
Micra	1.0L L4 F/I	33-2060 ♦	
Micra	1.3L L4 F/I	33-2060 ♦	
Pathfinder	2.7L L6 DSL	33-2031-2	
Pathfinder	3.3L V6 F/I	33-2031-2	HP-1010
Patrol	4.5L L6 F/I	E-9266	HP-1010
Patrol II	2.8L V6 DSL	E-9267	
Pickup	2.4L L4 F/I	E-9233	
Quest	3.3L V6 F/I	33-2091-1	HP-1010
Sentra	1.6L L4 F/I	33-2031-2	HP-2008
Sentra	2.0L L4 F/I	33-2031-2	HP-1008
Terrano II	2.7L L4 DSL	E-9251	
1998 NISSAN			
200SX	1.6L L4 F/I	33-2031-2	HP-2008
200SX	2.0L L4 F/I	33-2031-2 ♦	HP-1008
240SX	2.4L L4 F/I	33-2031-2 ♦	HP-2008
Altima	2.4L L4 F/I	33-2031-2	HP-1010
D21 Pickup	2.4L L4 F/I	E-9233	
Frontier	2.4L L4 F/I	E-9233	HP-1010
Maxima	2.0L V6 F/I	33-2031-2	
Maxima	3.0L V6 F/I	33-2031-2	HP-1010
Pathfinder	2.7L L6 DSL	33-2031-2	
Pathfinder	3.3L V6 F/I	33-2031-2	HP-1010
Patrol II	2.8L V6 DSL	E-9267	
Pickup	2.4L L4 F/I	E-9233	
Primera	2.0L L4 F/I	33-2031-2 ♦	
Quest	3.0L V6 F/I	33-2091-1	HP-2008
Sentra	1.6L L4 F/I	33-2031-2	HP-2008
Sentra	2.0L L4 F/I	33-2031-2	HP-1008
1997 NISSAN			
200SX	1.6L L4 F/I	33-2031-2	HP-2008
200SX	2.0L L4 F/I	33-2031-2 ♦	HP-1008
240SX	2.4L L4 F/I	33-2031-2 ♦	HP-2008
Altima	2.4L L4 F/I	33-2031-2	HP-2008
D21 Pickup	2.4L L4 F/I	E-9233	

*Indicates 2 filters required ♦ - Intake kit available - see page 80 Applications updated daily at knfilters.com

Vehicle	Engine Type	Air Filter	Oil Filter
1997 NISSAN			
D21 Pickup	2.5L L4 DSL	E-2760	
Maxima	2.0L V6 F/I	33-2031-2	
Maxima	3.0L V6 F/I	33-2031-2	HP-1010
Pathfinder	2.7L L6 DSL	33-2031-2	
Pathfinder	3.3L V6 F/I	33-2031-2	HP-1010
Patrol II	2.8L V6 DSL	E-9267	
Pickup	2.4L L4 F/I	E-9233	HP-2008
Primera	2.0L L4 F/I	33-2031-2 ♦	
Quest	3.0L V6 F/I	33-2091-1	HP-2008
Sentra	1.6L L4 F/I	33-2031-2	HP-2008
Skyline	2.6L - GTR, 24v, Twin Turbo	33-2031-2	
1996 NISSAN			
200SX	1.6L L4 F/I	33-2031-2	HP-2008
200SX	2.0L L4 F/I	33-2031-2 ♦	HP-1008
240SX	2.4L L4 F/I	33-2031-2 ♦	HP-2008
300ZX	3.0L V6 F/I	33-2036*	HP-2008
Altima	2.4L L4 F/I	33-2031-2	HP-2008
D21 Pickup	2.4L L4 F/I - 101BHP	E-2813	
D21 Pickup	2.4L L4 F/I - 124BHP	E-9233	
D21 Pickup	2.5L L4 DSL	E-2760	
Maxima	2.0L V6 F/I	33-2031-2	
Maxima	3.0L V6 F/I	33-2031-2	HP-1010
Pathfinder	3.3L V6 F/I	33-2031-2	HP-1010
Pickup	2.4L L4 F/I	E-9233	HP-2008
Pickup	3.0L V6 F/I	33-2031-2	HP-2008
Quest	3.0L V6 F/I	33-2091-1	HP-2008
Sentra	1.6L L4 F/I	33-2031-2	HP-2008
Terrano II	2.7L L4 DSL - From 6/96	E-9251 ♦	
Terrano II	2.7L L4 DSL - to 5/96	38-9150 ♦	
1995 NISSAN			
200SX	1.6L L4 F/I	33-2031-2	HP-2008
200SX	2.0L L4 F/I	33-2031-2	HP-1008
240SX	2.4L L4 F/I	33-2031-2 ♦	HP-2008
300ZX	3.0L V6 F/I	33-2036*	HP-2008
Altima	2.4L L4 F/I	33-2031-2	HP-2008
D21 Pickup	2.4L L4 F/I - 101BHP	E-2813	
D21 Pickup	2.4L L4 F/I - 124BHP	E-9233	
D21 Pickup	2.5L L4 DSL	E-2760	
Maxima	2.0L V6 F/I	33-2031-2	
Maxima	3.0L V6 F/I	33-2031-2	HP-1010
Micra	1.3L L4 F/I	33-2060 ♦	
Pathfinder	3.0L V6 F/I	33-2031-2	HP-2008
Pickup	2.4L L4 F/I	E-9233	HP-2008
Pickup	3.0L V6 F/I	33-2031-2	HP-2008
Quest	3.0L V6 F/I	33-2091-1	HP-2008
Sentra	1.6L L4 F/I	33-2031-2	HP-2008
1994 NISSAN			
200SX	2.0L L4 F/I	33-2031-2	
240SX	2.4L L4 F/I	33-2031-2 ♦	HP-2008
300ZX	3.0L V6 F/I	33-2036*	HP-2008
Altima	2.4L L4 F/I	33-2031-2	HP-2008
D21 Pickup	2.4L L4 F/I		HP-2008
D21 Pickup	2.4L L4 F/I - Non-US, 101BHP	E-2813	HP-2008
D21 Pickup	2.4L L4 F/I - Non-US, 124BHP	E-9233	HP-2008
D21 Pickup	2.4L L4 F/I - US	E-9233	HP-2008
D21 Pickup	2.5L L4 DSL	E-2760	
D21 Pickup	3.0L V6 F/I	33-2031-2	HP-2008
Maxima	3.0L V6 F/I	33-2031-2	HP-2008
Micra	1.0L L4 F/I	33-2060 ♦	
Micra	1.3L L4 F/I	33-2060 ♦	

Vehicle	Engine Type	Air Filter	Oil Filter
1994 NISSAN			
Pathfinder	3.0L V6 F/I	33-2031-2	HP-2008
Quest	3.0L V6 F/I	33-2091-1	HP-2008
Sentra	1.6L L4 F/I	33-2031-2	HP-2008
Sentra	2.0L L4 F/I	33-2031-2 ♦	HP-1003
1993 NISSAN			
200SX	2.0L L4 F/I	33-2031-2	
240SX	2.4L L4 F/I	33-2031-2 ♦	HP-2008
300ZX	3.0L V6 F/I	33-2036* ♦	HP-2008
Altima	2.4L L4 F/I	33-2031-2	HP-2008
D21 Pickup	2.4L L4 F/I		HP-2008
			HP-3001
D21 Pickup	2.4L L4 F/I - Non-US, 101BHP	E-2813	HP-2008
D21 Pickup	2.4L L4 F/I - Non-US, 124BHP	E-9233	HP-2008
D21 Pickup	2.4L L4 F/I - US	E-9233	HP-2008
D21 Pickup	2.5L L4 DSL	E-2760	
D21 Pickup	3.0L V6 F/I	33-2031-2	HP-2008
Maxima	3.0L V6 F/I	33-2031-2	HP-2008
NX	1.6L L4 F/I	33-2031-2	HP-2008
NX	2.0L L4 F/I	33-2031-2	HP-1003
Pathfinder	3.0L V6 F/I	33-2031-2	HP-2008
Patrol	2.8L V6 DSL	38-9102	
Patrol	3.0L L6 F/I	E-2830	
Patrol	4.2L L6 F/I	33-2031-2	
Patrol I	2.8L V6 DSL	38-9102	
Quest	3.0L V6 F/I	33-2091-1	HP-2008
Sentra	1.6L L4 F/I	33-2031-2	HP-2008
Sentra	2.0L L4 F/I	33-2031-2 ♦	HP-1003
Silvia	2.0L L4 F/I	33-2031-2	HP-1003
Skyline	2.0L L6 F/I	33-2031-2	
Skyline	2.5L V6 - 24v, Turbo	33-2031-2	
Sunny III	1.6L L4 F/I - 90BHP	E-9192	
Sunny III	2.0L L4 DSL	33-2031-2	
Sunny III	2.0L L4 F/I	33-2031-2 ♦	
1992 NISSAN			
200SX	1.8L L4 F/I	33-2031-2 ♦	
240SX	2.4L L4 F/I	33-2031-2 ♦	HP-2008
300ZX	3.0L V6 F/I	33-2036* ♦	HP-2008
D21 Pickup	2.4L L4 F/I		HP-2008
			HP-3001
D21 Pickup	2.4L L4 F/I - Non-US, 101BHP	E-2813	HP-2008
D21 Pickup	2.4L L4 F/I - Non-US, 124BHP	E-9233	HP-2008
D21 Pickup	2.4L L4 F/I - US	E-9233	HP-2008
D21 Pickup	3.0L V6 F/I	33-2031-2	HP-2008
Maxima	3.0L V6 F/I	33-2031-2	HP-2008
NX	1.6L L4 F/I	33-2031-2	HP-2008
NX	2.0L L4 F/I	33-2031-2	HP-1003
Pathfinder	3.0L V6 F/I	33-2031-2	HP-2008
Patrol	2.8L V6 DSL	38-9102	
Patrol I	2.8L V6 DSL	38-9102	
Sentra	1.6L L4 F/I	33-2031-2	HP-2008
Sentra	2.0L L4 F/I	33-2031-2 ♦	HP-1003
Stanza	2.4L L4 F/I	33-2031-2	HP-2008
1991 NISSAN			
200SX	1.8L L4 F/I	33-2031-2 ♦	
240SX	2.4L L4 F/I	33-2031-2 ♦	HP-2008
300ZX	3.0L V6 F/I	33-2036* ♦	HP-2008
Bluebird	1.6L L4 F/I	E-2983	
D21 Pickup	2.4L L4 F/I		HP-2008
			HP-3001
D21 Pickup	2.4L L4 F/I - Non-US	E-2813	HP-2008

*Indicates 2 filters required ♦ - Intake kit available - see page 80 Applications updated daily at knfilters.com

Vehicle	Engine Type	Air Filter	Oil Filter
1991 NISSAN			
D21 Pickup	2.4L L4 F/I - US	E-9233	HP-2008
D21 Pickup	2.5L L4 DSL	E-2760	
D21 Pickup	3.0L V6 F/I	33-2031-2	HP-2008
Maxima	3.0L V6 F/I	33-2031-2	HP-2008
Micra	1.0L L4 F/I	E-9225	
NX	1.6L L4 F/I - 100BHP, 16v	E-9192	
NX	2.0L L4 F/I	33-2031-2	HP-1003
Pathfinder	3.0L V6 F/I	33-2031-2	HP-2008
Sentra	1.6L L4 F/I	33-2031-2	HP-2008
Sentra	2.0L L4 F/I	33-2031-2 ♦	HP-1003
Terrano I	2.7L L4 DSL	E-9136	
1990 NISSAN			
200SX	1.8L L4 F/I	33-2031-2 ♦	
240SX	2.4L L4 F/I	33-2031-2 ♦	HP-2008
300ZX	3.0L V6 F/I - Non-US, VG30 Eng.	33-2031-2	
300ZX	3.0L V6 F/I - US	33-2036* ♦	HP-2008
Axxess	2.4L L4 F/I	33-2031-2	HP-2008
D21 Pickup	2.4L L4 F/I		HP-2008
			HP-3001
D21 Pickup	2.4L L4 F/I - Non-US	E-2813	HP-2008
D21 Pickup	2.4L L4 F/I - US	E-9233	HP-2008
D21 Pickup	2.5L L4 DSL	E-2760	
D21 Pickup	3.0L V6 F/I		HP-2008
D21 Pickup	3.0L V6 F/I - w/Panel Filter	33-2031-2	HP-2008
D21 Pickup	3.0L V6 F/I - w/Round Filter	E-2830	HP-2008
Maxima	3.0L V6 F/I	33-2031-2	HP-2008
Micra	1.0L L4 F/I	E-9225	
Micra	1.2L L4 CARB	E-9225	HP-2008
Pathfinder	3.0L V6 F/I		HP-2008
Pathfinder	3.0L V6 F/I - w/Panel Filter	33-2031-2	HP-2008
Pathfinder	3.0L V6 F/I - w/Round Filter	E-2830	HP-2008
Pulsar NX	1.6L L4 F/I	33-2031-2	HP-2008
Sentra	1.6L L4 F/I		HP-2008
Stanza	2.4L L4 F/I	33-2031-2	HP-2008
Terrano I	2.7L L4 DSL	E-9136	
1989 NISSAN			
200SX	1.8L L4 F/I	33-2031-2 ♦	
240SX	2.4L L4 F/I	33-2031-2 ♦	HP-2008
300ZX	3.0L V6 F/I	33-2031-2 ♦	HP-2008
Bluebird	2.0L L4 F/I - CA20S Eng.	E-2983	
D21 Pickup	2.4L L4 F/I	E-2813	HP-3001
D21 Pickup	2.5L L4 DSL	E-2760	
D21 Pickup	3.0L V6 F/I	E-2830	HP-2008
Maxima	3.0L V6 F/I	33-2031-2	HP-2008
Pathfinder	3.0L V6 F/I	E-2830	HP-2008
Sentra	1.6L L4 F/I		HP-2008
Terrano I	2.7L L4 DSL	E-9136	
1988 NISSAN			
200SX	1.8L L4 F/I	33-2031-2 ♦	
240SX	2.4L L4 F/I	33-2031-2	HP-2008
300ZX	3.0L V6 F/I	33-2031-2 ♦	HP-2008
D21 Pickup	2.4L L4 F/I	E-2813	HP-3001
D21 Pickup	3.0L V6 F/I	E-2830	HP-2008
Maxima	3.0L V6 F/I		HP-2008
Maxima	3.0L V6 F/I - 154BHP	33-2010	HP-2008
Maxima	3.0L V6 F/I - 170BHP	33-2031-2	HP-2008
Maxima	3.0L V6 F/I - US	33-2010	HP-2008
Pathfinder	3.0L V6 F/I	E-2830	HP-2008
1988 NISSAN			
Pulsar NX	1.8L L4 F/I	33-2031-2	HP-2008
Sentra	1.6L L4 CARB		HP-2008
Sentra	1.6L L4 F/I	E-2630	HP-2008
1987 NISSAN			
200SX	2.0L L4 F/I	33-2010	HP-2008
200SX	3.0L V6 F/I	33-2010	HP-2008
300ZX	3.0L V6 F/I		HP-2008
300ZX	3.0L V6 F/I - exc. Turbo	33-2031-2 ♦	HP-2008
300ZX	3.0L V6 F/I - Turbo	33-2010 ♦	HP-2008
Bluebird	2.0L L4 F/I - CA20S Eng.	E-2983	
D21 Pickup	2.4L L4 F/I	E-2813	HP-3001
D21 Pickup	2.5L L4 DSL	E-2760	
D21 Pickup	3.0L V6 F/I	E-2830	HP-2008
Maxima	3.0L V6 F/I	33-2010	HP-2008
Pathfinder	2.4L L4 F/I	E-2813	HP-3001
Pathfinder	3.0L V6 F/I	E-2830	HP-2008
Patrol	3.2L L6 DSL	E-3720	
Pulsar NX SE	1.6L L4 F/I	33-2031-2	HP-2008
Sentra	1.6L L4 CARB	E-2630	HP-2008
Sentra	1.6L L4 F/I	E-2630	HP-2008
Silvia	2.0L L4 F/I	33-2031-2	
1986 NISSAN			
200SX	1.8L L4 F/I	33-2010	HP-2008
200SX	2.0L L4 F/I	33-2010	HP-2008
300ZX	3.0L V6 F/I	33-2010 ♦	HP-2008
720 Pickup	2.2L L4 CARB	E-2760	
720 Pickup	2.4L L4 F/I	E-2813	HP-3001
Bluebird	2.0L L4 F/I - CA20S Eng.	E-2983	
D21 Pickup	2.4L L4 F/I	E-2813	HP-3001
D21 Pickup	3.0L V6 F/I	E-2830	HP-2008
Silvia	2.0L L4 F/I	33-2031-2	
1985 NISSAN			
300ZX	3.0L V6 F/I	33-2010 ♦	HP-2008
720 Pickup	2.0L L4 CARB	E-2760	HP-3001
720 Pickup	2.4L L4 CARB	E-2760	HP-3001
Bluebird	2.0L L4 F/I	E-2983	
Maxima	3.0L V6 F/I	33-2010	HP-2008
Silvia	2.0L L4 F/I	33-2031-2	
1984 NISSAN			
280ZX	2.8L L6 F/I	E-2990	HP-2004
300ZX	3.0L V6 F/I	33-2010 ♦	HP-2008
720 Pickup	2.4L L4 CARB	E-2760	HP-3001
Maxima	2.4L L6 F/I	33-2031-2	HP-2004
Patrol	3.2L L6 DSL	E-3720	
Patrol	3.3L L6 DSL	E-3720	
1983 NISSAN			
280ZX	2.8L L6 F/I	E-2990	HP-2004
720 Pickup	2.2L L4 CARB		HP-3001
720 Pickup	2.2L L4 CARB - w/Round Filter	E-2760	HP-3001
720 Pickup	2.2L L4 DSL	E-2760	HP-2005
720 Pickup	2.4L L4 CARB	E-2760	HP-3001
Bluebird	1.8L L4 CARB - CA18 Eng.	E-2983	
1982 NISSAN			
280ZX	2.8L L6 F/I	E-2990	HP-2004
720 Pickup	2.2L L4 CARB	E-2760	HP-3001
720 Pickup	2.2L L4 DSL	E-2210	HP-2005
Maxima	2.8L L6 DSL	33-2031-2	HP-3001

*Indicates 2 filters required ♦ - Intake kit available - see page 80 Applications updated daily at knfilters.com

Vehicle	Engine Type	Air Filter	Oil Filter
1981 NISSAN			
280ZX	2.8L L6 F/I	E-2990	HP-2004
720 Pickup	2.2L L4 CARB	E-2760	HP-3001
720 Pickup	2.2L L4 DSL	E-2210	HP-2005
1980 NISSAN			
280ZX	2.8L L6 F/I	E-2880	HP-2004
1979 NISSAN			
280ZX	2.8L L6 F/I	E-2880	HP-3001
310	1.4L L4 CARB	E-2920	HP-2008
620	2.0L L4 CARB	E-2760	HP-3001
1978 NISSAN			
280Z	2.8L L6 F/I	33-2010	HP-3001
280ZX	2.8L L6 F/I	E-2880	HP-3001
510	2.0L L4 CARB	E-2830	HP-3001
620	2.0L L4 CARB	E-2760	HP-3001
1977 NISSAN			
280Z	2.8L L6 F/I	33-2010	HP-3001
1976 NISSAN			
260Z	2.6L L6 CARB	E-2900	
280Z	2.8L L6 F/I	33-2010	HP-3001
620	2.0L L4 CARB	E-2760	HP-3001
1975 NISSAN			
240Z	2.4L L6 CARB	E-2910	
260Z	2.6L L6 CARB	E-2900	
280Z	2.8L L6 F/I	33-2010	HP-3001
1974 NISSAN			
240Z	2.4L L6 CARB	E-2910	
260C	2.6L CARB - L26 Eng.	E-2760	
260Z	2.6L L6 CARB	E-2900	HP-3001
1973 NISSAN			
240Z	2.4L L6 CARB	E-2900	HP-3001
510	1.6L L4 CARB	E-2760	HP-3001
1972 NISSAN			
240Z	2.4L L6 CARB	E-2910	HP-3001
510	1.6L L4 CARB	E-2760	HP-3001
1200	71 L4 CARB	E-2620	HP-2008
1971 NISSAN			
240Z	2.4L L6 CARB	E-2910	HP-3001
510	1.6L L4 CARB		HP-3001
1970 NISSAN			
240Z	2.4L L6 CARB	E-2910	HP-3001
510	1.6L L4 CARB		HP-3001
1600	1.6L L4 CARB	E-2760	HP-2005
2000	2.0L L4 CARB		HP-2005
1969 NISSAN			
510	97 L4 CARB		HP-3001
1600	1.6L L4 CARB	E-2760	HP-2005
2000	2.0L L4 CARB		HP-2005
1968 NISSAN			
520 Pickup	79 L4 CARB	E-1050	HP-2005
1600	1.6L L4 CARB		HP-2005
2000	121 L4 CARB		HP-2005
1967 NISSAN			
1600	1.6L L4 CARB		HP-2005
1966 NISSAN			
1600	1.6L L4 CARB		HP-2005

Vehicle	Engine Type	Air Filter	Oil Filter
1974 NORTON			
Commando 750	750 - no elect. start	NO-0100	
Commando 850	850 - no elect. start	NO-0100	
1973 NORTON			
Commando 750	750 - no elect. start	NO-0100	
1972 NORTON			
Commando 750	750 - no elect. start	NO-0100	
1971 NORTON			
Commando 750	750 - no elect. start	NO-0100	
1970 NORTON			
Commando 750	750 - no elect. start	NO-0100	
1969 NORTON			
Commando 750	750 - no elect. start	NO-0100	
1968 NORTON			
Commando 750	750 - no elect. start	NO-0100	
2004 OLDSMOBILE			
Alero	2.2L L4 F/I	33-2121-1	HP-7000
Alero	3.4L V6 F/I	33-2121-1	HP-1001
Bravada	4.2L L6 F/I	E-1009 ♦	HP-2006
Silhouette Van	3.4L V6 F/I	33-2156	HP-1001
2003 OLDSMOBILE			
Alero	2.2L L4 F/I		HP-7000
Alero	3.4L V6 F/I	33-2121-1	HP-1001
Aurora	4.0L V8 F/I	33-2063-1	HP-2006
Bravada	4.2L L6 F/I	E-1009 ♦	HP-2006
Silhouette Van	3.4L V6 F/I	33-2156	HP-1001
2002 OLDSMOBILE			
Alero	2.2L L4 F/I		HP-7000
Alero	3.4L V6 F/I	33-2121-1	HP-1001
Aurora	4.0L V8 F/I	33-2063-1	HP-2006
Bravada	4.2L L6 F/I	E-1009 ♦	HP-2006
Silhouette Van	3.4L V6 F/I	33-2156	HP-1001
2001 OLDSMOBILE			
Alero	2.4L L4 F/I	33-2121-1	HP-1007
Alero	3.4L V6 F/I	33-2121-1	HP-1001
Aurora	4.0L V8 F/I	33-2063-1	HP-2006
Bravada	4.3L V6 F/I	33-2042	HP-2001
Silhouette Van	3.4L V6 F/I	33-2156	HP-1001
2000 OLDSMOBILE			
Alero	2.4L L4 F/I	33-2121-1	HP-1007
Alero	3.4L V6 F/I	33-2121-1	HP-1001
Bravada	4.3L V6 F/I	33-2042	HP-2001
Silhouette Van	3.4L V6 F/I	33-2156	HP-1001
1999 OLDSMOBILE			
88	3.8L V6 F/I	33-2086	HP-1001
Alero	2.4L L4 F/I	33-2121-1	HP-1007
Alero	3.4L V6 F/I	33-2121-1	HP-1001
Aurora	4.0L V8 F/I	33-2086	HP-2006
Bravada	4.3L V6 F/I	33-2042	HP-2001
Cutlass	3.1L V6 F/I	33-2121-1	HP-1001
Intrigue	3.8L V6 F/I	33-2063-1	HP-1001
LSS	3.8L V6 F/I	33-2086	HP-1001
Silhouette Van	3.4L V6 F/I	33-2156	HP-1001
1998 OLDSMOBILE			
88	3.8L V6 F/I	33-2086	HP-1001
Achieva	3.1L V6 F/I	33-2068	HP-1001
Aurora	4.0L V8 F/I	33-2086	HP-2006
Bravada	4.3L V6 F/I	33-2042	HP-2001

*Indicates 2 filters required ♦ - Intake kit available - see page 80 Applications updated daily at knfilters.com

Vehicle	Engine Type	Air Filter	Oil Filter
1998 OLDSMOBILE			
Cutlass	3.1L V6 F/I	33-2121-1	HP-1001
Intrigue	3.8L V6 F/I	33-2063-1	HP-1001
LSS	3.8L V6 F/I	33-2086	HP-1001
Regency	3.8L V6 F/I	33-2086	HP-1001
Silhouette Van	3.4L V6 F/I	33-2156	HP-1001
1997 OLDSMOBILE			
88	3.8L V6 F/I	33-2086	HP-1001
Achieva	2.4L L4 F/I	33-2068	HP-1007
Aurora	4.0L V8 F/I	33-2086	HP-2006
Bravada	4.3L V6 F/I	33-2042	HP-2001
Cutlass	3.1L V6 F/I	33-2063-1	HP-1001
Cutlass Supreme	3.1L V6 F/I	33-2063-1	HP-1001
LSS	3.8L V6 F/I	33-2086	HP-1001
1996 OLDSMOBILE			
88	3.8L V6 F/I	33-2086	HP-1001
Aurora	4.0L V8 F/I	33-2086	HP-2006
Bravada	4.3L V6 F/I	33-2042	HP-2001
Cutlass Ciera	3.1L V6 F/I	E-0890	HP-1001
Cutlass Supreme	3.1L V6 F/I	33-2063-1	HP-1001
LSS	3.8L V6 F/I	33-2086	HP-1001
Ninety-Eight	3.8L V6 F/I	33-2086	HP-1001
1995 OLDSMOBILE			
88	3.8L V6 F/I	33-2086	HP-1001
Achieva	2.3L L4 F/I	33-2068	HP-1001
Aurora	4.0L V8 F/I	33-2086	HP-2006
Cutlass Ciera	2.2L L4 F/I	E-0850	HP-1001
Cutlass Ciera	3.1L V6 F/I	E-0890	HP-1001
Cutlass Supreme	3.1L V6 F/I	33-2063-1	HP-1001
Cutlass Supreme	3.4L V6 F/I	33-2063-1	HP-2001
Ninety-Eight	3.8L V6 F/I	33-2086	HP-1001
1994 OLDSMOBILE			
88	3.8L V6 F/I		HP-1001
Bravada	4.3L V6 F/I	33-2042	HP-2001
Cutlass Ciera	3.1L V6 F/I	E-0890	HP-1001
Cutlass Supreme	3.1L V6 F/I	33-2063-1	HP-1001
Cutlass Supreme	3.4L V6 F/I	33-2063-1	HP-2001
1993 OLDSMOBILE			
88	3.8L V6 F/I		HP-1001
Bravada	4.3L V6 F/I	33-2042	HP-2001
Cutlass Ciera	3.3L V6 F/I	33-2022	HP-1001
Cutlass Supreme	3.1L V6 F/I - VIN M	E-0890	HP-1001
Cutlass Supreme	3.1L V6 F/I - VIN T	33-2038	HP-2001
Cutlass Supreme	3.4L V6 F/I	33-2038	HP-2001
Ninety-Eight	3.8L V6 F/I		HP-1001
1992 OLDSMOBILE			
88	3.8L V6 F/I		HP-1001
Bravada	4.3L V6 CPI	33-2042	HP-2001
Bravada	4.3L V6 TBI	E-1065	HP-2001
Custom Cruiser	5.7L V8 F/I	33-2051	HP-2002
Cutlass Ciera	3.3L V6 F/I	33-2022	HP-1001
Cutlass Supreme	3.1L V6 F/I	33-2038	HP-2001
Ninety-Eight	3.8L V6 F/I		HP-1001
Toronado	3.8L V6 F/I	33-2022	HP-1001
1991 OLDSMOBILE			
Custom Cruiser	5.0L V8 F/I	33-2051	HP-2002
Cutlass Ciera	3.3L V6 F/I	33-2022	HP-1001
Delta 88	3.8L V6 F/I	33-2022	HP-1001
Ninety-Eight	3.8L V6 F/I		HP-1001
1990 OLDSMOBILE			
Cutlass Ciera	3.3L V6 F/I	33-2022	HP-1001
Cutlass Supreme	3.1L V6 F/I	33-2038	HP-2001
Delta 88	3.8L V6 F/I	33-2022	HP-1001
Ninety-Eight	3.8L V6 F/I	33-2022	HP-1001
Toronado	3.8L V6 F/I	33-2022	HP-1001
1989 OLDSMOBILE			
Cutlass Calais	2.3L L4 F/I - High Output	33-2022	
Cutlass Ciera	2.8L V6 F/I	E-0850	HP-2001
Cutlass Ciera	3.3L V6 F/I	33-2022	HP-1001
Delta 88	3.8L V6 F/I	33-2022	HP-1001
Ninety-Eight	3.8L V6 F/I	33-2022	HP-1001
Toronado	3.8L V6 F/I	33-2022	HP-1001
1988 OLDSMOBILE			
Custom Cruiser	5.0L V8 CARB	E-1500	HP-2006
Cutlass Ciera	2.5L L4 F/I	E-1015	
Cutlass Supreme	2.8L V6 F/I		HP-2001
Cutlass Supreme	5.0L V8 CARB	E-1500	HP-2006
Delta 88	3.8L V6 F/I	33-2022	HP-1001
Toronado	3.8L V6 F/I	33-2022	HP-1001
1987 OLDSMOBILE			
Cutlass	5.0L V8 CARB	E-1500	HP-2006
Cutlass Ciera	2.8L V6 F/I	E-0850	HP-2001
Cutlass Ciera	3.8L V6 F/I	E-0870	HP-1001
Cutlass Supreme	3.8L V6 CARB	E-1150	HP-1001
Delta 88	3.8L V6 F/I	33-2022	HP-1001
Ninety-Eight	3.8L V6 F/I	33-2022	HP-1001
1986 OLDSMOBILE			
Cutlass Supreme	3.8L V6 CARB	E-1150	HP-1001
Cutlass Supreme	5.0L V8 CARB	E-1500	HP-2006
Delta 88	3.8L V6 F/I	33-2022	HP-1001
1985 OLDSMOBILE			
Cutlass Ciera	4.3L V6 DSL	E-1577	HP-2001
Cutlass Supreme	3.8L V6 CARB	E-1150	HP-1001
Cutlass Supreme	5.0L V8 CARB	E-1500	HP-2006
Cutlass Supreme	5.7L V8 DSL	E-1690	HP-2006
Delta 88	5.0L V8 CARB	E-1500	HP-2006
Ninety-Eight	4.3L V6 DSL	E-1577	HP-2001
1984 OLDSMOBILE			
Cutlass Ciera	4.3L V6 DSL	E-1577	HP-2001
Cutlass Supreme	3.8L V6 CARB	E-1150	HP-1001
Cutlass Supreme	5.0L V8 CARB	E-1500	HP-2006
Cutlass Supreme	5.7L V8 DSL	E-1690	HP-2006
Delta 88	5.0L V8 CARB	E-1500	HP-2006
1983 OLDSMOBILE			
Cutlass Supreme	3.8L V6 CARB	E-1150	HP-1001
Cutlass Supreme	5.0L V8 CARB	E-1500	HP-2006
Delta 88	5.0L V8 CARB	E-1500	HP-2006
1982 OLDSMOBILE			
Cutlass Supreme	3.8L V6 CARB	E-1150	HP-1001
1981 OLDSMOBILE			
Cutlass Supreme	5.7L V8 DSL	E-1650	
1980 OLDSMOBILE			
Cutlass Supreme	350 V8 DSL	E-1690	HP-2006
1979 OLDSMOBILE			
Cutlass Supreme	260 V8 CARB	E-1500	HP-2006
Cutlass Supreme	260 V8 DSL	E-1690	HP-2006
Cutlass Supreme	350 V8 CARB	E-1500	HP-2002
Delta 88	350 V8 CARB	E-1650	HP-2006
Toronado	350 V8 CARB	E-1650	HP-2006

*Indicates 2 filters required ♦ - Intake kit available - see page 80 Applications updated daily at knfilters.com

Vehicle	Engine Type	Air Filter	Oil Filter
1979 OLDSMOBILE			
Toronado	350 V8 DSL	E-1650	HP-2006
1978 OLDSMOBILE			
Delta 88	350 V8 CARB	E-1650	HP-2006
Toronado	403 V8 CARB	E-1650	HP-2006
1977 OLDSMOBILE			
Cutlass	350 V8 CARB	E-1650	HP-2003
Cutlass	403 V8 CARB	E-1650	HP-2003
Cutlass Supreme	403 V8 CARB	E-1650	
Delta 88	350 V8 CARB - VIN R	E-1650	HP-2003
Ninety Eight Regency	350 V8 CARB	E-1650	HP-2003
Toronado	403 V8 CARB	E-1650	HP-2003
1976 OLDSMOBILE			
Custom Cruiser	455 V8 CARB	E-1650	HP-2003
Cutlass	350 V8 CARB	E-1650	HP-2003
Cutlass	455 V8 CARB	E-1650	HP-2003
Delta 88	350 V8 CARB	E-1650	HP-2003
Delta 88	455 V8 CARB	E-1650	HP-2003
Ninety Eight	455 V8 CARB	E-1650	HP-2003
Toronado	455 V8 CARB	E-1650	HP-2003
1975 OLDSMOBILE			
Cutlass	350 V8 CARB	E-1650	HP-2003
Cutlass Salon	350 V8 CARB	E-1650	
Cutlass Supreme	350 V8 CARB	E-1650	
Delta 88	350 V8 CARB	E-1650	HP-2003
Ninety Eight	455 V8 CARB	E-1650	
Toronado	455 V8 CARB	E-1650	HP-2003
1974 OLDSMOBILE			
Cutlass	350 V8 CARB - exc. W30	E-1650	
Delta 88	350 V8 CARB - w/o hood scoop	E-1650	
Delta 88	455 V8 4 BBL. - w/o hood scoop	E-1650	
Toronado	455 V8 CARB	E-1650	HP-2003
1973 OLDSMOBILE			
98	455 V8 CARB	E-1650	HP-2003
Cutlass	350 V8 4 BBL. - w/o hood scoop	E-1650	
Cutlass	455 V8 CARB - exc. W31	E-1650	
Cutlass Supreme	350 V8 2 BBL.	E-1220	
Cutlass Supreme	350 V8 4 BBL. - w/hood scoop	E-1590	
Cutlass Supreme	350 V8 4 BBL. - w/o hood scoop	E-1650	
Cutlass Supreme	455 V8 CARB - w/hood scoop	E-1590	
Cutlass Supreme	455 V8 CARB - w/o hood scoop	E-1650	
Delta 88	350 V8 4 BBL. - w/o hood scoop	E-1650	
Toronado	455 V8 CARB	E-1650	
1972 OLDSMOBILE			
98	455 V8 CARB	E-1650	
Cutlass	350 V8 2 BBL.	E-1220	HP-2003
Cutlass	350 V8 4 BBL.		HP-2003
Cutlass	350 V8 4 BBL. - w/hood scoop	E-1590	HP-2003
Cutlass	350 V8 4 BBL. - w/o hood scoop	E-1650	HP-2003
Cutlass	455 V8 CARB		HP-2003
Cutlass	455 V8 CARB - w/hood scoop	E-1590	HP-2003
Cutlass	455 V8 CARB - w/o hood scoop	E-1650	HP-2003
Cutlass Supreme	350 V8 2 BBL.	E-1220	HP-2003
Cutlass Supreme	350 V8 4 BBL.		HP-2003
Cutlass Supreme	350 V8 4 BBL. - w/hood scoop	E-1590	HP-2003
Cutlass Supreme	350 V8 4 BBL. - w/o hood scoop	E-1650	HP-2003
Cutlass Supreme	455 V8 CARB		HP-2003
Cutlass Supreme	455 V8 CARB - w/hood scoop	E-1590	HP-2003
Cutlass Supreme	455 V8 CARB - w/o hood scoop	E-1650	HP-2003
Toronado	455 V8 CARB	E-1650	
1971 OLDSMOBILE			
442	455 V8 2 BBL.	E-1220	HP-2003
442	455 V8 4 BBL.		HP-2003
442	455 V8 4 BBL. - ram air	E-1590	HP-2003
442	455 V8 4 BBL. - w/o ram air	E-1650	HP-2003
442	455 V8 4 BBL. - w/ram air	E-1590	HP-2003
Cutlass	350 V8 2 BBL.	E-1220	HP-2003
Cutlass	350 V8 4 BBL.		HP-2003
Cutlass	350 V8 4 BBL. - w/o ram air	E-1650	HP-2003
Cutlass	350 V8 4 BBL. - w/ram air	E-1590	HP-2003
Cutlass	455 V8 4 BBL. - w/o ram air	E-1650	
Cutlass Supreme	350 V8 CARB	E-1220	
Cutlass Supreme	455 V8 2 BBL.	E-1220	HP-2003
Cutlass Supreme	455 V8 4 BBL.		HP-2003
Cutlass Supreme	455 V8 4 BBL. - ram air	E-1590	HP-2003
Cutlass Supreme	455 V8 4 BBL. - w/o ram air	E-1650	HP-2003
Delta 88	455 V8 4 BBL.	E-1650	HP-2003
Toronado	455 V8 CARB	E-1650	HP-2003
Vista Cruiser	350 V8 4 BBL.	E-1650	HP-2003
1970 OLDSMOBILE			
442	455 V8 2 BBL.	E-1220	HP-2003
442	455 V8 4 BBL.		HP-2003
442	455 V8 4 BBL. - w/hood scoop	E-1590	HP-2003
442	455 V8 4 BBL. - w/o hood scoop	E-1650	HP-2003
Cutlass	350 V8 2 BBL.	E-1220	HP-2003
Cutlass	350 V8 4 BBL.		HP-2003
Cutlass	350 V8 4 BBL. - w/o ram air	E-1650	HP-2003
Cutlass	350 V8 4 BBL. - w/ram air	E-1590	HP-2003
Cutlass	455 V8 2 BBL.	E-1220	HP-2003
Cutlass	455 V8 4 BBL.		HP-2003
Cutlass	455 V8 4 BBL. - w/o ram air	E-1650	HP-2003
Cutlass	455 V8 4 BBL. - w/ram air	E-1590	HP-2003
Cutlass Supreme	350 V8 2 BBL.	E-1220	
Cutlass Supreme	350 V8 4 BBL.	E-1650	
Delta 88	455 V8 4 BBL. - w/o hood scoop	E-1650	
Toronado	455 V8 CARB	E-1650	HP-2003
1969 OLDSMOBILE			
98	455 V8 4 BBL.	E-1650	HP-2003
442	400 V8 CARB	E-1650	
442	455 V8 2 BBL.	E-1220	HP-2003
442	455 V8 4 BBL.		HP-2003
442	455 V8 4 BBL. - ram air	E-1590	HP-2003
442	455 V8 4 BBL. - w/o ram air	E-1650	HP-2003
442	455 V8 4 BBL. - w/ram air	E-1590	HP-2003

*Indicates 2 filters required ♦ - Intake kit available - see page 80 Applications updated daily at knfilters.com

Vehicle	Engine Type	Air Filter	Oil Filter
1969 OLDSMOBILE			
Cutlass	350 V8 2 BBL.	E-1220	HP-2003
Cutlass	350 V8 4 BBL.	E-1650	HP-2003
Cutlass Supreme	350 V8 2 BBL.	E-1220	
Cutlass Supreme	350 V8 2 BBL. - 4 BBL	E-1650	
Cutlass Supreme	350 V8 4 BBL.	E-1650	
Delta 88	455 V8 4 BBL.	E-1650	HP-2003
1968 OLDSMOBILE			
98	455 V8 4 BBL.	E-1650	HP-2003
442	350 V8 4 BBL.	E-1650	HP-2003
442	400 V8 CARB	E-1650	
442	455 V8 2 BBL.	E-1220	HP-2003
442	455 V8 4 BBL.		HP-2003
442	455 V8 4 BBL. - ram air	E-1590	HP-2003
442	455 V8 4 BBL. - w/o ram air	E-1650	HP-2003
442	455 V8 4 BBL. - w/ram air	E-1590	HP-2003
Cutlass	350 V8 2 BBL.	E-1220	HP-2003
Cutlass	350 V8 4 BBL.	E-1650	HP-2003
Cutlass	400 V8 4 BBL.	E-1650	
Cutlass Supreme	350 V8 2 BBL.	E-1220	
Cutlass Supreme	350 V8 4 BBL.	E-1650	
Delta 88	455 V8 4 BBL.	E-1650	HP-2003
Toronado	455 V8 CARB	E-1650	HP-2003
1967 OLDSMOBILE			
442	400 V8 CARB	E-1650	
Cutlass	330 V8 CARB - Manual Trans.	E-1650	
Cutlass	400 V8 CARB - Manual Trans.	E-1650	
Cutlass Supreme	330 V8 CARB - Auto Trans.	E-1220	
Cutlass Supreme	330 V8 CARB - Manual Trans.	E-1650	
Delta 88	425 V8 CARB - Manual Trans.	E-1650	
Toronado	425 V8 CARB	E-1650	
1966 OLDSMOBILE			
442	400 V8 CARB	E-1650	
Cutlass	330 V8 CARB	E-1220	
Delta 88	425 V8 4 BBL.	E-1650	
2012 OPEL			
Antara	2.2L L4 DSL	33-2956	
Astra J	1.4L L4 F/I - exc. Turbo	33-2964 ♦	
Astra J	1.4L L4 F/I - Turbo	33-2966 ♦	
Astra J	1.6L L4 F/I - exc. Turbo	33-2964	
Astra J	1.6L L4 F/I - Turbo	33-2966	
Corsa D	1.6L L4 F/I	33-2935 ♦	
Insignia	1.6L L4 F/I	33-2962	
Insignia	2.0L L4 DSL	33-2962	
Insignia	2.0L L4 F/I	33-2962	
Insignia	2.8L V6 F/I	33-2962	
2011 OPEL			
Astra J	1.6L L4 F/I - exc. Turbo	33-2964	
Insignia	1.4L L4 F/I	33-2962	
Insignia	1.6L L4 F/I	33-2962	
Insignia	1.8L L4 F/I	33-2962	
Insignia	2.0L L4 DSL	33-2962	
Insignia	2.0L L4 F/I	33-2962	
Insignia	2.8L V6 F/I	33-2962	
2010 OPEL			
Antara	2.4L L4 F/I	33-2956	
Corsa D	1.7L L4 DSL	33-2935	
Insignia	1.8L L4 F/I	33-2962	
2010 OPEL			
Insignia	2.0L L4 DSL	33-2962	
Insignia	2.0L L4 F/I	33-2962	
Insignia	2.8L V6 F/I	33-2962	
Tigra	1.8L L4 F/I	33-2212 ♦	
2009 OPEL			
Astra H	1.4L L4 F/I	33-2787 ♦	
Astra H	1.8L L4 F/I	33-2787 ♦	
GT	2.0L L4 F/I	33-2369 ♦	
Insignia	2.0L L4 DSL	33-2962	
Insignia	2.0L L4 F/I	33-2962	
Insignia	2.8L V6 F/I	33-2962	
2008 OPEL			
Antara	3.2L V6 F/I	33-2956	
Astra H	1.8L L4 F/I	33-2787 ♦	
Astra H	2.0L L4 F/I	33-2787 ♦	
Corsa D	1.6L L4 F/I	33-2935 ♦	
Insignia	1.8L L4 F/I	33-2962	
Insignia	2.0L L4 DSL	33-2962	
Insignia	2.0L L4 F/I	33-2962	
Insignia	2.8L V6 F/I	33-2962	
Tigra	1.4L L4 F/I	33-2212 ♦	
2007 OPEL			
Antara	2.0L L4 DSL	33-2956	
Astra H	1.6L L4 F/I - exc. Turbo	33-2787 ♦	
Astra H	1.6L L4 F/I - Turbo	33-2213 ♦	
Astra H	1.7L L4 DSL - 292MM x 221MM	33-2213 ♦	
Astra H	1.8L L4 F/I	33-2787 ♦	
Astra H	2.0L L4 F/I	33-2787 ♦	
Corsa D	1.2L L4 F/I	33-2935 ♦	
Corsa D	1.6L L4 F/I	33-2935 ♦	
GT	2.0L L4 F/I	33-2369 ♦	
2006 OPEL			
Astra H	1.6L L4 F/I	33-2787 ♦	
Astra H	1.9L L4 DSL	33-2213 ♦	
2004 OPEL			
Astra G	1.8L L4 F/I	33-2787 ♦	
Astra G	2.0L L4 DSL	33-2787 ♦	
Astra G	2.0L L4 F/I	33-2787 ♦	
Astra H	1.8L L4 F/I	33-2787 ♦	
Corsa C	1.4L L4 F/I	33-2212 ♦	
Vectra C	3.2L V6 F/I	33-2848 ♦	
2003 OPEL			
Astra G	2.0L L4 DSL	33-2787 ♦	
Astra G	2.0L L4 F/I	33-2787 ♦	
Astra G	2.2L L4 F/I	33-2213 ♦	HP-7000
2002 OPEL			
Astra G	1.2L L4 F/I	33-2787 ♦	
Corsa C	1.2L L4 F/I	33-2212 ♦	
2001 OPEL			
Astra G	2.0L L4 DSL	33-2787 ♦	
Astra G	2.0L L4 F/I	33-2787 ♦	
Corsa C	1.4L L4 F/I	33-2212 ♦	
2000 OPEL			
Corsa B	1.4L L4 F/I	33-2098 ♦	
Corsa B	1.6L L4 F/I	33-2098 ♦	
1999 OPEL			
Corsa B	1.4L L4 F/I	33-2098 ♦	
Corsa B	1.6L L4 F/I	33-2098 ♦	

*Indicates 2 filters required ♦ - Intake kit available - see page 80 Applications updated daily at knfilters.com

AIR & OIL FILTERS

Vehicle	Engine Type	Air Filter	Oil Filter
1999 OPEL			
Vectra B	2.0L L4 DSL	33-2771 ♦	
Vectra B	2.0L L4 F/I	33-2750 ♦	
1998 OPEL			
Astra G	1.6L L4 F/I	33-2787 ♦	
Corsa B	1.2L L4 F/I	33-2098 ♦	
Corsa B	1.6L L4 F/I	33-2098 ♦	
Corsa B	1.7L L4 DSL	33-2098	
Vectra B	2.5L V6 F/I	33-2750 ♦	
1997 OPEL			
Corsa B	1.6L L4 F/I	33-2098 ♦	
Corsa B	1.7L L4 DSL	33-2098	
Tigra	1.6L L4 F/I	33-2098 ♦	
1996 OPEL			
Calibra	2.0L L4 F/I	33-2080 ♦	
Corsa B	1.4L L4 F/I	33-2098 ♦	
Corsa B	1.6L L4 F/I	33-2098 ♦	
1995 OPEL			
Calibra	2.0L L4 F/I	33-2080 ♦	
Calibra	2.5L V6 F/I	33-2080 ♦	
Corsa B	1.6L L4 F/I	33-2098 ♦	
Vectra A	1.7L L4 DSL - exc. Turbo	33-2080	
1993 OPEL			
Corsa B	1.2L L4 F/I	33-2098 ♦	
Frontera A	2.0L L4 F/I	33-2013 ♦	
1990 OPEL			
Corsa A	1.6L L4 F/I - GSi	33-2547 ♦ E-1070 ♦	
1989 OPEL			
Kadett E	1.6L L4 DSL	33-2504	
Vectra A	1.8L L4 F/I	33-2080 ♦	
1985 OPEL			
Monza	2.5L L4 F/I	33-2512	
1984 OPEL			
Kadett D	1.3L L4 CARB - 60BHP	E-2585	
1974 OPEL			
Manta A	1.9L L4 CARB - 105BHP	33-2001	
Manta A	1.9L L4 CARB - Exc., 105BHP	E-1070	
1973 OPEL			
GT	1.9L L4 F/I	E-2340	HP-1002
1972 OPEL			
GT	1.9L L4 F/I	E-2340	HP-1002
1971 OPEL			
GT	1.9L L4 F/I	E-2340	HP-1002
1970 OPEL			
GT	1.9L L4 F/I	E-2340	
2012 PERODUA			
Myvi	1.3L L4 F/I	33-2922	
2011 PERODUA			
Myvi	1.3L L4 F/I	33-2922	
2010 PERODUA			
Myvi	1.3L L4 F/I	33-2922	
2009 PERODUA			
Myvi	1.3L L4 F/I	33-2922	

Vehicle	Engine Type	Air Filter	Oil Filter
2008 PERODUA			
Myvi	1.3L L4 F/I	33-2922	
2007 PERODUA			
Myvi	1.3L L4 F/I	33-2922	
2006 PERODUA			
Myvi	1.3L L4 F/I	33-2922	
2002 PERODUA			
Kenari-I902	1.0L L4 - EJ-DE	33-2836	
2000 PERODUA			
Kenari-I902	1.0L L4 - EJ-DE	33-2836	
2012 PEUGEOT			
206	1.4L L4 DSL	33-2975	
206	1.4L L4 F/I	33-2916	
508	1.6L L4 DSL	33-2975	
2011 PEUGEOT			
206	1.6L L4 F/I	33-2937	
207 Turbo	1.6L L4 F/I	33-2936 ♦	
206 Plus	1.4L L4 F/I	33-2916	
RC-Z	1.6L L4 F/I	33-2936	
2010 PEUGEOT			
206	1.6L L4 F/I	33-2937	
206 Plus	1.4L L4 F/I	33-2916	
2009 PEUGEOT			
206	1.6L L4 F/I	33-2937	
207	1.6L L4 DSL - 90/109BHP	33-2847 ♦	
207	1.6L L4 DSL - 92/112BHP	33-2975 ♦	
207	1.6L L4 F/I - 109BHP	33-2844 ♦	
207	1.6L L4 F/I - 120BHP	33-2941 ♦	
207 Turbo	1.6L L4 F/I	33-2936 ♦	
307	1.6L L4 F/I - 110BHP	33-2937 ♦	
Partner	1.6L L4 F/I	33-2937 ♦	
2008 PEUGEOT			
206	1.4L L4 DSL	33-2840	
206	1.4L L4 F/I - 16v	33-2916	
206	1.4L L4 F/I - 8v	33-2813	
206	1.6L L4 DSL	33-2847	
206	1.6L L4 F/I	33-2937	
207	1.6L L4 DSL	33-2847 ♦	
207	1.6L L4 F/I - 109BHP	33-2844 ♦	
207	1.6L L4 F/I - 120BHP	33-2941 ♦	
207 Turbo	1.6L L4 F/I	33-2936 ♦	
307	1.6L L4 F/I	33-2937 ♦	
407	2.0L L4 F/I	33-2911	
2007 PEUGEOT			
206	1.6L L4 DSL	33-2847	
206	1.6L L4 F/I	33-2937 ♦	
207 Turbo	1.6L L4 F/I	33-2936 ♦	
307	1.6L L4 F/I	33-2937 ♦	
307	2.0L L4 DSL	33-2245	
307	2.0L L4 F/I	33-2957 ♦	
2006 PEUGEOT			
206	1.4L L4 DSL	33-2840	
206	1.4L L4 F/I - 16v	33-2916 ♦	
206	1.4L L4 F/I - 8v	33-2813 ♦	
206	1.6L L4 DSL	33-2847 ♦	
206	1.6L L4 F/I	33-2937 ♦	
206 RC	2.0L L4 F/I	33-2510	
307	1.6L L4 F/I	33-2937 ♦	

*Indicates 2 filters required ♦ - Intake kit available - see page 80 Applications updated daily at knfilters.com

Partial Listing - Complete List of Vehicles and Applications at knfilters.com

Vehicle	Engine Type	Air Filter	Oil Filter
2006 PEUGEOT			
407	2.2L L4 F/I	33-2911	
407	3.0L V6 F/I	33-2911	
Expert	2.0L L4 DSL	33-2539	
2005 PEUGEOT			
206	1.4L L4 DSL	33-2840	
206	1.4L L4 F/I - 16v	33-2916 ♦	
206	1.4L L4 F/I - 8v	33-2813 ♦	
206	1.6L L4 DSL	33-2847 ♦	
206	1.6L L4 F/I	33-2937 ♦	
206 RC	2.0L L4 F/I	33-2510 ♦	
307	1.6L L4 F/I - from 10/05	33-2937 ♦	
307	1.6L L4 F/I - to 9/05	33-2245 ♦	
307	2.0L L4 DSL	33-2245 ♦	
307	2.0L L4 F/I - to 4/05	33-2245 ♦	
2004 PEUGEOT			
206	1.4L L4 DSL	33-2840	
206	1.4L L4 F/I - 16v	33-2916 ♦	
206	1.4L L4 F/I - 8v	33-2813 ♦	
206	1.6L L4 F/I	33-2813 ♦	
206	2.0L L4 DSL	33-2813 ♦	
206	2.0L L4 F/I	33-2813 ♦	
206 RC	2.0L L4 F/I	33-2510 ♦	
407	2.0L L4 DSL	33-2928 ♦	
407	2.0L L4 F/I	33-2911	
2003 PEUGEOT			
206	1.4L L4 DSL	33-2840	
206	1.4L L4 F/I - 16v	33-2916 ♦	
206	1.4L L4 F/I - 8v	33-2813 ♦	
206	1.6L L4 F/I	33-2813 ♦	
307	1.6L L4 F/I	33-2245 ♦	
307	2.0L L4 DSL	33-2245 ♦	
307	2.0L L4 F/I	33-2245 ♦	
607	2.2L L4 DSL	33-2539	
607	2.2L L4 F/I	33-2539	
2002 PEUGEOT			
106 II	1.6L L4 F/I - 16v	33-2772 ♦	
206	1.6L L4 F/I	33-2813 ♦	
206	2.0L L4 DSL	33-2813 ♦	
206	2.0L L4 F/I	33-2813 ♦	
307	2.0L L4 F/I	33-2245 ♦	
406	3.0L V6 F/I - 190BHP	33-2539	
2001 PEUGEOT			
206	1.6L L4 F/I	33-2813 ♦	
306	1.9L L4 DSL - exc. Turbo	E-9184 ♦	
406	2.0L L4 DSL	33-2539	
406	2.0L L4 F/I - Turbo	33-2539	
406	3.0L V6 F/I - 190BHP	33-2539	
406	3.0L V6 F/I - 207BHP	33-2226	
2000 PEUGEOT			
206	1.6L L4 F/I	33-2813 ♦	
206	2.0L L4 F/I	33-2813 ♦	
306	2.0L L4 F/I - 132BHP	33-2781 ♦	
406	1.8L L4 F/I - to 10/00	33-2539 ♦	
1999 PEUGEOT			
206	1.6L L4 F/I	33-2813 ♦	
306	1.8L L4 F/I - 16v	33-2781 ♦	
306	2.0L L4 DSL	33-2173 ♦	
306	2.0L L4 F/I - 132BHP	33-2781 ♦	
Boxer	2.0L L4 F/I	E-9231-1	
1998 PEUGEOT			
306	2.0L L4 F/I - 132BHP	33-2781 ♦	
406	1.8L L4 F/I	33-2539 ♦	
1997 PEUGEOT			
106 II	1.6L L4 F/I - 16v	33-2772 ♦	
406	2.0L L4 F/I	33-2539	
1996 PEUGEOT			
106 I	1.3L L4 F/I	33-2725 ♦	
106 II	1.6L L4 F/I - 16v	33-2772 ♦	
1995 PEUGEOT			
106 I	1.3L L4 F/I	33-2725 ♦	
106 I	1.4L L4 DSL	33-2539	
405 II	1.9L L4 DSL	33-2539	
1994 PEUGEOT			
106 I	1.3L L4 F/I	33-2725 ♦	
205 I	1.1L L4 F/I - 60BHP	E-9183	
205 I	1.9L L4 F/I	E-9000 ♦	
205 II	1.1L L4 F/I	E-9183	
205 II	1.9L L4 DSL	E-9184	
205 II	1.9L L4 F/I	E-9000 ♦	
405 II	1.6L L4 F/I	33-2539	
405 II	1.9L L4 DSL	33-2539	
1993 PEUGEOT			
605	3.0L V6 F/I	33-2648	
1992 PEUGEOT			
405 II	1.9L L4 DSL	33-2539	
605	2.1L L4 DSL	33-2648	
1991 PEUGEOT			
405	1.9L L4 F/I	33-2539	
405 I	1.8L L4 DSL	33-2539 ♦	
405 I	1.9L L4 DSL	33-2539	
405 I	1.9L L4 F/I	33-2539 ♦	
1990 PEUGEOT			
405 I	1.8L L4 DSL	33-2539 ♦	
1989 PEUGEOT			
405	1.9L L4 F/I	33-2539	
405 I	1.8L L4 DSL	33-2539 ♦	
405 I	1.9L L4 DSL	33-2539	
405 I	1.9L L4 F/I	33-2539 ♦	
605	3.0L V6 F/I	33-2648	
1988 PEUGEOT			
405 I	1.8L L4 DSL	33-2539 ♦	
1987 PEUGEOT			
405	1.8L CARB - GRi, SRi	33-2539	
405 I	1.8L L4 DSL	33-2539	
1986 PEUGEOT			
505	2.0L L4 CARB	E-2360	
505	2.0L L4 F/I	E-2300	
1985 PEUGEOT			
205 I	1.6L L4 F/I	E-9000	
1980 PEUGEOT			
604	2.8L V6 CARB	E-3740	
1979 PEUGEOT			
604	2.8L V6 CARB	E-3740	
1977 PEUGEOT			
504	2.0L L4 CARB	E-2360	

Vehicle	Engine Type	Air Filter	Oil Filter
2012 PIAGGIO			
Beverly	350		KN-563
2010 PIAGGIO			
MP3 LT	400		KN-184
MP3 MIC	400		KN-184
Vespa GTS Super i.e.	300		KN-183
2009 PIAGGIO			
Beverly Cruiser	500		KN-184
Beverly Tourer	250		KN-183
Beverly Tourer i.e.	300		KN-183
Fly	150		KN-183
MP3 i.e.	125		KN-183
MP3 LT	400		KN-184
MP3 MIC	400		KN-184
2008 PIAGGIO			
MP3	400		KN-184
MP3 LT	400		KN-184
MP3 MIC	400		KN-184
Vespa GT Granturismo L	125		KN-183
2007 PIAGGIO			
Beverly Cruiser	500		KN-184
MP3	250		KN-183
MP3 LT	250		KN-183
MP3 MIC	250		KN-183
2006 PIAGGIO			
Beverly Cruiser	250		KN-183
Beverly GT Rst	250		KN-183
Beverly IE	250		KN-183
Beverly Sport	250		KN-183
Fly	150		KN-183
2005 PIAGGIO			
Vespa GT Granturismo L	125		KN-183
2004 PIAGGIO			
Vespa ET4	150		KN-183
2001 PLYMOUTH			
Neon	2.0L L4 F/I	E-1006	HP-1002
Prowler	3.5L V6 F/I	33-2087	HP-2004
2000 PLYMOUTH			
Neon	2.0L L4 F/I	E-1006	HP-1002
Prowler	3.5L V6 F/I	33-2087	HP-2004
Voyager Van	2.4L L4 F/I	33-2087	HP-1002
Voyager Van	3.0L V6 F/I	33-2087	HP-2004
1999 PLYMOUTH			
Breeze	2.0L L4 F/I	33-2067	HP-1002
Breeze	2.4L L4 F/I	33-2067	HP-1002
Grand Voyager	3.3L V6 F/I	33-2087	HP-2004
Neon	2.0L L4 F/I	33-2087	HP-1002
		33-2087 ♦	HP-1002
Prowler	3.5L V6 F/I	33-2087	HP-2004
1998 PLYMOUTH			
Breeze	2.0L L4 F/I	33-2067	HP-1002
Breeze	2.4L L4 F/I	33-2067	HP-1002
Grand Voyager	3.3L V6 F/I	33-2087	HP-2004
Neon	2.0L L4 F/I	33-2087	HP-1002
		33-2087 ♦	HP-1002
Voyager Van	2.4L L4 F/I	33-2087	HP-1002
1997 PLYMOUTH			
Breeze	2.0L L4 F/I	33-2067	HP-1002
Grand Voyager	3.3L V6 F/I	33-2087	HP-2004
Neon	2.0L L4 F/I	33-2087	HP-1002
		33-2087 ♦	HP-1002
Voyager Van	2.4L L4 F/I	33-2087	HP-1002
1996 PLYMOUTH			
Breeze	2.0L L4 F/I	33-2067	HP-1002
Grand Voyager	3.3L V6 F/I	33-2087	HP-2004
Neon	2.0L L4 F/I	33-2087	HP-1002
		33-2087 ♦	HP-1002
1995 PLYMOUTH			
Neon	2.0L L4 F/I	33-2087	HP-1002
		33-2087 ♦	HP-1002
Voyager Van	3.0L V6 F/I	33-2002	HP-2004
1994 PLYMOUTH			
Acclaim	3.0L V6 F/I	33-2002	HP-2004
Sundance	3.0L V6 F/I	33-2002	HP-2004
Voyager Van	3.0L V6 F/I	33-2002	HP-2004
1993 PLYMOUTH			
Colt	1.8L L4 F/I - Non-US	33-2074	
Grand Voyager	3.3L V6 F/I		HP-2004
Voyager Van	3.0L V6 F/I	33-2002	HP-2004
1992 PLYMOUTH			
Acclaim	2.5L L4 F/I	E-1923	HP-2004
Laser	2.0L L4 F/I	E-2875	
		E-2875 ♦	
Laser	2.0L L4 F/I - After 4-3-92	E-2875	HP-1010
Laser	2.0L L4 F/I - Before 4-3-92	E-2875	HP-1005
1991 PLYMOUTH			
Laser	2.0L L4 F/I	E-2875	HP-1005
		E-2875 ♦	HP-1005
1990 PLYMOUTH			
Laser	1.8L L4 F/I	E-2875	HP-1004
Laser	2.0L L4 F/I	E-2875	HP-1005
		E-2875 ♦	HP-1005
Sundance	2.5L L4 F/I - Turbo	33-2039	
1987 PLYMOUTH			
Horizon	2.2L L4 CARB	33-2006	HP-1002
1986 PLYMOUTH			
Voyager Van	2.6L L4 CARB	E-1004	HP-1005
1983 PLYMOUTH			
Colt	1.6L L4 CARB	E-2750	HP-1005
1977 PLYMOUTH			
Volare	225 L6 1 BBL.	E-1000	HP-2004
Volare	225 L6 2 BBL.	E-1100	HP-2004
1974 PLYMOUTH			
Cuda	360 V8 CARB	E-1530	
Duster	225 L6 CARB	E-1000	HP-2004
Duster	318 V8 CARB	E-1100	HP-2004
1973 PLYMOUTH			
Barracuda	318 V8 CARB	E-1100	HP-2004
Barracuda	340 V8 CARB	E-1530	HP-2004
Cuda	340 V8 CARB	E-1530	
Duster	318 V8 CARB	E-1100	HP-2004
Duster	340 V8 CARB	E-1530	HP-2004
Roadrunner	340 V8 CARB	E-1530	

*Indicates 2 filters required ♦ - Intake kit available - see page 80 Applications updated daily at knfilters.com

Vehicle	Engine Type	Air Filter	Oil Filter
1972 PLYMOUTH			
Barracuda	340 V8 CARB	E-1530	HP-3001
Duster	340 V8 CARB	E-1530	HP-3001
Roadrunner	440 V8 3x2BBL.	E-1980	HP-3001
Roadrunner	440 V8 4 BBL.	E-1530	HP-3001
Scamp	225 L6 CARB	E-1000	
1971 PLYMOUTH			
Barracuda	383 V8 CARB	E-1530	HP-3001
Cuda	340 V8 CARB - exc. Hi Perf.	E-1980	
Cuda	426 V8 CARB	E-1980	
Cuda	440 V8 CARB - exc. Hi Perf.	E-1980	
Cuda	440 V8 CARB - Hi Perf.	E-1530	
Duster	340 V8 3x2BBL.	E-1980	HP-3001
Duster	340 V8 4 BBL.	E-1530	HP-3001
GTX	440 V8 CARB	E-1530	
		E-1980	
Roadrunner	383 V8 CARB	E-1530	HP-3001
Roadrunner	440 V8 CARB		HP-3001
Roadrunner	440 V8 CARB - exc. Hi Perf.	E-1980	HP-3001
Roadrunner	440 V8 CARB - Hi Perf.	E-1530	HP-3001
Satellite	383 V8 CARB	E-1530	HP-3001
1970 PLYMOUTH			
Barracuda	318 V8 CARB	E-1100	HP-3001
Barracuda	383 V8 CARB	E-1530	HP-3001
Cuda	340 V8 3x2BBL.	E-1980	
Cuda	340 V8 4 BBL.	E-1530	
Cuda	383 V8 CARB	E-1530	
Cuda	426 V8 CARB	E-1980	
Cuda	440 V8 CARB	E-1530	
		E-1980	
Duster	340 V8 CARB	E-1530	HP-3001
GTX	426 V8 CARB	E-1980	HP-3001
GTX	440 V8 CARB		HP-3001
GTX	440 V8 CARB - exc. Hi Perf.	E-1980	HP-3001
GTX	440 V8 CARB - Hi Perf.	E-1530	HP-3001
Roadrunner	383 V8 CARB	E-1530	HP-3001
Roadrunner	426 V8 CARB	E-1980	HP-3001
Roadrunner	440 V8 3x2BBL.	E-1980	HP-3001
Roadrunner	440 V8 4 BBL.	E-1530	HP-3001
Superbird	440 V8 CARB - exc. Hi Perf.	E-1980	
Superbird	440 V8 CARB - Hi Perf.	E-1530	
1969 PLYMOUTH			
Barracuda	318 V8 CARB	E-1100	HP-3001
Barracuda	340 V8 CARB	E-1530	HP-3001
Barracuda	383 V8 CARB		HP-3001
Barracuda	383 V8 CARB - w/fresh air control	E-1980	HP-3001
Barracuda	383 V8 CARB - w/o snorkel	E-1530	HP-3001
Barracuda	383 V8 CARB - w/snorkel	E-1540	HP-3001
Fury III	440 V8 CARB - w/fresh air control	E-1980	
GTX	426 V8 CARB	E-1980	HP-3001
GTX	440 V8 CARB	E-1530	HP-3001
		E-1980	HP-3001
Roadrunner	383 V8 CARB		HP-3001
Roadrunner	383 V8 CARB - w/o snorkel	E-1530	HP-3001
Roadrunner	383 V8 CARB - w/snorkel	E-1540	HP-3001
Roadrunner	426 V8 CARB	E-1980	HP-3001
Roadrunner	440 V8 CARB		HP-3001
1969 PLYMOUTH			
Roadrunner	440 V8 CARB - w/fresh air control	E-1980	HP-3001
Roadrunner	440 V8 CARB - w/o snorkel	E-1530	HP-3001
Roadrunner	440 V8 CARB - w/snorkel	E-1540	HP-3001
1968 PLYMOUTH			
Barracuda	340 V8 CARB	E-1530	HP-3001
Barracuda	383 V8 CARB		HP-3001
Barracuda	383 V8 CARB - w/o snorkel	E-1530	HP-3001
Barracuda	383 V8 CARB - w/snorkel	E-1540	HP-3001
Fury III	383 V8 CARB - w/o snorkel	E-1530	
GTX	426 V8 CARB	E-1980	HP-3001
GTX	440 V8 CARB		HP-3001
GTX	440 V8 CARB - w/o snorkel	E-1530	HP-3001
GTX	440 V8 CARB - w/snorkel	E-1540	HP-3001
Roadrunner	383 V8 CARB		HP-3001
Roadrunner	383 V8 CARB - w/o snorkel	E-1530	HP-3001
Roadrunner	383 V8 CARB - w/snorkel	E-1540	HP-3001
Roadrunner	426 V8 CARB	E-1980	HP-3001
1967 PLYMOUTH			
Barracuda	273 V8 CARB	E-1100	HP-3001
Barracuda	383 V8 CARB	E-1540	HP-3001
GTX	426 V8 CARB	E-1980	HP-3001
Satellite	426 V8 CARB	E-1980	HP-3001
1966 PLYMOUTH			
Barracuda	273 V8 CARB	E-1957	HP-3001
Fury III	318 V8 CARB	E-1100	HP-3001
Fury III	383 V8 2 BBL.	E-1540	HP-3001
Fury III	383 V8 4 BBL.	E-1957	HP-3001
Satellite	426 V8 CARB	E-1540	HP-3001
1965 PLYMOUTH			
Barracuda	273 V8 2 BBL.	E-1100	HP-3001
Barracuda	273 V8 4 BBL.	E-1957	HP-3001
1964 PLYMOUTH			
Fury	426 V8 CARB	E-1540	HP-3001
2013 POLARIS			
Ranger 4x4 EFI	499	PL-5008	KN-303
		PL-5008	KN-303C
Ranger 6x6	760	PL-8007	
Ranger Crew	498	PL-5008	KN-303
		PL-5008	KN-303C
Ranger Crew	760	PL-8007	KN-198
Ranger Crew DSL	904	PL-8007	
Ranger DSL	904	PL-8007	
Ranger EFI Mid-Size	760	PL-8007	
Ranger RZR	567	PL-5712	
Ranger RZR	760	PL-8007 ♦	KN-198
Ranger RZR 4	760	PL-8007	
Ranger RZR S	760	PL-8007 ♦	KN-198
Ranger RZR XP 900	875	PL-9011 ♦	
Ranger XP	875	PL-5712	
Sportsman 400 H.O.	455	PL-1003	KN-303
		PL-1003	KN-303C
Sportsman 500 HO	498	PL-1003	KN-303
		PL-1003	KN-303C
Sportsman 500 HO Touring	498	PL-1003	KN-303

*Indicates 2 filters required ♦ - Intake kit available - see page 80 Applications updated daily at knfilters.com

Vehicle	Engine Type	Air Filter	Oil Filter
2013 POLARIS			
Sportsman 500 HO Touring	498	PL-1003	KN-303C
Sportsman 550 EPs	550	PL-1003	
Sportsman 550 EPs Touring	550	PL-1003	
Sportsman 800 EFI	800	PL-1003	KN-198
Sportsman 850 Touring H.O. EPs	850	PL-1003	
Sportsman 850 XP H.O.	850	PL-5509	
2012 POLARIS			
Phoenix 200	196	PL-1004	
Ranger	400	PL-5008	KN-303
		PL-5008	KN-303C
Ranger 4x4 EFI	499	PL-5008	KN-303
		PL-5008	KN-303C
Ranger 6x6	760	PL-8007	
Ranger Crew 500	498	PL-5008	KN-303
		PL-5008	KN-303C
Ranger Crew 800	760	PL-8007	KN-198
Ranger Crew DSL	904	PL-8007	
Ranger DSL	904	PL-8007	
Ranger HD	800		KN-198
Ranger RZR	567	PL-5712	
Ranger RZR	760	PL-8007 ♦	KN-198
Ranger RZR 4 800 EPs Robby Gordon Edition	760	PL-8007	KN-198
Ranger RZR 4 EPs	760		KN-198
Ranger RZR S	760	PL-8007 ♦	KN-198
Ranger RZR XP 900	875	PL-9011 ♦	
Ranger XP	760	PL-8007	
Scrambler 500 4x4	500	PL-1003	KN-303
		PL-1003	KN-303C
Sportsman 400 H.O.	455	PL-1003	KN-303
		PL-1003	KN-303C
Sportsman 500 EFI	500		KN-303
			KN-303C
Sportsman 500 EFI Touring	500		KN-303
			KN-303C
Sportsman 500 HO	498	PL-1003	KN-303
		PL-1003	KN-303C
Sportsman 500 HO Touring	500	PL-1003	KN-303
		PL-1003	KN-303C
Sportsman 550 EPs Touring	550	PL-1003	
Sportsman 550 XP EFI	550	PL-5509	
Sportsman 800 Big Boss 6x6	800		KN-198
Sportsman 800 EFI	800	PL-1003	KN-198
Sportsman 850 Touring H.O. EPs	850	PL-1003	
Sportsman 850 XP H.O.	850	PL-5509	
Sportsman 850 XP H.O. EPs	850	PL-5509	
Sportsman X2 550	550	PL-1003	
Trail Boss 330	329	PL-1003	KN-303
		PL-1003	KN-303C
2011 POLARIS			
Hawkeye 300	300		KN-303

Vehicle	Engine Type	Air Filter	Oil Filter
2011 POLARIS			
Hawkeye 300	300		KN-303C
Outlaw 525 IRS	525	PL-5207	
Outlaw 525 IRS	525 - 1st Filter	PL-5207	KN-155
Outlaw 525 IRS	525 - 2nd Filter	PL-5207	KN-157
Ranger	400	PL-5008	KN-303
		PL-5008	KN-303C
Ranger 4x4 DSL	904	PL-8007	
Ranger 4x4 EFI	499	PL-5008	KN-303
		PL-5008	KN-303C
Ranger 6x6	760	PL-8007	
Ranger Crew 500	498	PL-5008	KN-198
Ranger Crew 800	760	PL-8007	KN-198
Ranger HD	800		KN-198
Ranger RZR	760	PL-8007 ♦	KN-198
Ranger RZR 4 800 EPs Robby Gordon Edition	760	PL-8007 ♦	KN-198
Ranger RZR S	760	PL-8007 ♦	KN-198
Ranger RZR XP 900	875	PL-9011 ♦	
Ranger XP	760	PL-8007	KN-198
Scrambler 500 4x4	500	PL-1003	KN-303
		PL-1003	KN-303C
Sportsman 400 H.O.	455	PL-1003	KN-303
		PL-1003	KN-303C
Sportsman 500 EFI	500		KN-303
			KN-303C
Sportsman 500 EFI Touring	500		KN-303
			KN-303C
Sportsman 500 HO	498	PL-1003	KN-303
		PL-1003	KN-303C
Sportsman 500 HO Touring	500	PL-1003	KN-303
		PL-1003	KN-303C
Sportsman 550	550	PL-1003	
Sportsman 550 EPs	550	PL-1003	
Sportsman 550 EPs Touring	550	PL-1003	
Sportsman 550 XP EFI	550	PL-5509	
Sportsman 800 Big Boss 6x6	800		KN-198
Sportsman 800 EFI	800	PL-1003	KN-198
Sportsman 800 EFI 6x6	800	PL-1003	KN-198
Sportsman 850 Touring EPs	850	PL-1003	
Sportsman 850 XP EFI	850	PL-5509	
Sportsman 850 XP EPs	850	PL-5509	
Sportsman X2 550	550	PL-1003	
2010 POLARIS			
Outlaw 525 S	510 - 1st Filter		KN-155
Outlaw 525 S	510 - 2nd Filter		KN-157
Ranger	400	PL-5008	KN-303
		PL-5008	KN-303C
Ranger 4x4 EFI	499	PL-5008	KN-303
		PL-5008	KN-303C
Ranger 6x6	760	PL-5008	
Ranger Crew 800 EPS	760	PL-5008	KN-198
Ranger HD	800	PL-5008	KN-198
Ranger RZR	760	PL-8007 ♦	KN-198

*Indicates 2 filters required ♦ - Intake kit available - see page 80 Applications updated daily at knfilters.com

Vehicle	Engine Type	Air Filter	Oil Filter
2010 POLARIS			
Ranger RZR S	760	PL-8007 ♦	KN-198
Ranger XP	800	PL-5008	
Scrambler 500 4x4	500	PL-1003	KN-303
		PL-1003	KN-303C
Sportsman 400 H.O.	455	PL-1003	KN-303
		PL-1003	KN-303C
Sportsman 500 EFI	500		KN-303
			KN-303C
Sportsman 500 EFI Touring	500		KN-303
			KN-303C
Sportsman 500 HO	498	PL-1003	KN-303
		PL-1003	KN-303C
Sportsman 500 HO Touring	500	PL-1003	KN-303
		PL-1003	KN-303C
Sportsman 550	550	PL-1003	
Sportsman 550 EPs	550	PL-1003	
Sportsman 550 EPs Browning	550	PL-1003	
Sportsman 550 EPs Touring	550	PL-1003	
Sportsman 550 XP EFI	550	PL-5509	
Sportsman 550 XP EFI w/EPs	550	PL-5509	
Sportsman 550 XP LE-Browning	550	PL-5509	
Sportsman 800 EFI	800	PL-1003	KN-198
Sportsman 800 EFI 6x6	800	PL-1003	KN-198
Sportsman 850 Touring EPs	850	PL-1003	
Sportsman 850 XP	850	PL-5509	
Sportsman 850 XP EFI	850	PL-5509	
Sportsman 850 XP EPs	850	PL-5509	
Sportsman 850 XP EPs Browning	850	PL-5509	
Sportsman 850 XP LE-Browning	850	PL-5509	
Sportsman 850 XP LE-Nuclear Sunset	850	PL-5509	
Sportsman X2 550	550	PL-1003	
2009 POLARIS			
Outlaw 450 MXR	450 - 1st Filter		KN-155
Outlaw 450 MXR	450 - 2nd Filter		KN-157
Outlaw 525 IRS	525	PL-5207	
Outlaw 525 IRS	525 - 1st Filter	PL-5207	KN-155
Outlaw 525 IRS	525 - 2nd Filter	PL-5207	KN-157
Outlaw 525 S	510 - 1st Filter		KN-155
Outlaw 525 S	510 - 2nd Filter		KN-157
Phoenix 200	200	PL-1004	
Ranger 4x4 EFI	500	PL-5008	KN-303
		PL-5008	KN-303C
Ranger 6x6 EFI	700	PL-5008	KN-198
Ranger Crew	700	PL-5008	KN-198
Ranger HD	700	PL-5008	KN-198
Ranger RZR	760	PL-8007 ♦	KN-198
Ranger RZR S	760	PL-8007 ♦	KN-198
Ranger XP	700	PL-5008	KN-198
Scrambler 500 4x4	500	PL-1003	KN-303
		PL-1003	KN-303C
Sportsman 400 H.O.	455	PL-1003	KN-303

Vehicle	Engine Type	Air Filter	Oil Filter
2009 POLARIS			
Sportsman 400 H.O.	455	PL-1003	KN-303C
Sportsman 500 EFI	496	PL-1003	KN-303
		PL-1003	KN-303C
Sportsman 500 Efi LE	496	PL-1003	KN-303
		PL-1003	KN-303C
Sportsman 500 EFI Touring	496	PL-1003	KN-303
		PL-1003	KN-303C
Sportsman 500 Efi Touring Le	496	PL-1003	KN-303
		PL-1003	KN-303C
Sportsman 500 Efi X2	496	PL-1003	KN-303
		PL-1003	KN-303C
Sportsman 500 HO	500	PL-1003	KN-303
		PL-1003	KN-303C
Sportsman 550 XP EFI	550	PL-5509	
Sportsman 550 XP EFI w/EPs	550	PL-5509	
Sportsman 800 EFI	800		KN-198
Sportsman 800 EFI 6x6	800	PL-1003	KN-198
Sportsman 800 EFI HO	769	PL-1003	KN-198
Sportsman 800 EFI Touring	769	PL-1003	KN-198
Sportsman 850 XP EFI	850	PL-5509	
Sportsman 850 XP LE-Browning	850	PL-5509	
Sportsman 850 XP LE-Nuclear Sunset	850	PL-5509	
Sportsman X2 800 EFI	769	PL-1003	KN-198
Trail Blazer 330	330	PL-1005	KN-303
		PL-1005	KN-303C
2008 POLARIS			
Hawkeye 300	300		KN-303
			KN-303C
Outlaw 450 MXR	450 - 1st Filter		KN-155
Outlaw 450 MXR	450 - 2nd Filter		KN-157
Outlaw 525	525 - 1st Filter		KN-155
Outlaw 525	525 - 2nd Filter		KN-157
Outlaw 525 IRS	525	PL-5207	
Outlaw 525 IRS	525 - 1st Filter	PL-5207	KN-155
Outlaw 525 IRS	525 - 2nd Filter	PL-5207	KN-157
Outlaw 525 S	510 - 1st Filter		KN-155
Outlaw 525 S	510 - 2nd Filter		KN-157
Phoenix 200	200	PL-1004	
Ranger 4x4 EFI	500	PL-5008	KN-303
		PL-5008	KN-303C
Ranger 6x6 EFI	700	PL-5008	KN-198
Ranger Crew	700	PL-5008	KN-198
Ranger RZR	760	PL-8007 ♦	KN-198
Ranger XP	700	PL-5008	KN-198
Scrambler 500 4x4	500	PL-1003	KN-303
		PL-1003	KN-303C
Sportsman 300	329	PL-1004	KN-303
		PL-1004	KN-303C
Sportsman 300 LE	329	PL-1004	KN-303
		PL-1004	KN-303C
Sportsman 400 H.O.	455	PL-1003	KN-303
		PL-1003	KN-303C
Sportsman 500 EFI	496	PL-1003	KN-303

*Indicates 2 filters required ♦ - Intake kit available - see page 80 Applications updated daily at knfilters.com

Vehicle	Engine Type	Air Filter	Oil Filter
2008 POLARIS			
Sportsman 500 EFI	496	PL-1003	KN-303C
Sportsman 500 Efi LE	496	PL-1003	KN-303
		PL-1003	KN-303C
Sportsman 500 EFI Touring	496	PL-1003	KN-303
		PL-1003	KN-303C
Sportsman 500 Efi Touring Le	496	PL-1003	KN-303
		PL-1003	KN-303C
Sportsman 500 Efi X2	496	PL-1003	KN-303
		PL-1003	KN-303C
Sportsman 500 HO	500	PL-1003	KN-303
		PL-1003	KN-303C
Sportsman 800 EFI	800		KN-198
Sportsman 800 EFI HO	769	PL-1003	KN-198
Sportsman 800 EFI Touring	769	PL-1003	KN-198
Sportsman X2 500 EFI	500	PL-1003	KN-303
		PL-1003	KN-303C
Sportsman X2 700 EFI	684	PL-1003	KN-198
Sportsman X2 800 EFI LE	800	PL-1003	KN-198
Trail Blazer 330	330	PL-1005	KN-303
		PL-1005	KN-303C
Trail Boss 330	325	PL-1005	KN-303
		PL-1005	KN-303C
2007 POLARIS			
Hawkeye 300 2x4	300	PL-1004	KN-303
		PL-1004	KN-303C
Hawkeye 300 4x4	300	PL-1004	KN-303
		PL-1004	KN-303C
Outlaw 500	500	PL-5006	KN-112
Outlaw 525 IRS	525	PL-5207	
Outlaw 525 IRS	525 - 1st Filter	PL-5207	KN-155
Outlaw 525 IRS	525 - 2nd Filter	PL-5207	KN-157
Phoenix 200	200	PL-1004	
Predator 500	496	PL-5003	KN-112
Ranger 2x4	500	PL-5008	KN-303
		PL-5008	KN-303C
Ranger 4x4 EFI	500	PL-5008	KN-303
		PL-5008	KN-303C
Ranger 6x6 EFI	700	PL-5008	KN-198
Ranger XP	700	PL-5008	KN-198
Sawtooth	200	PL-1004	
Scrambler 500 4x4	500	PL-1003	KN-303
		PL-1003	KN-303C
Sportsman 450	455	PL-1003	KN-303
		PL-1003	KN-303C
Sportsman 500 EFI	496	PL-1003	KN-303
		PL-1003	KN-303C
Sportsman 500 Efi X2	496	PL-1003	KN-303
		PL-1003	KN-303C
Sportsman 500 HO	500		KN-303
			KN-303C
Sportsman 700 EFI	684	PL-1003	KN-198
Sportsman 700 MV	700	PL-1003	KN-198
Sportsman 700 Twin EFI	700		KN-198
Sportsman 800 EFI	800	PL-1003	KN-198

Vehicle	Engine Type	Air Filter	Oil Filter
2007 POLARIS			
Sportsman X2 500 EFI	500	PL-1003	KN-303
		PL-1003	KN-303C
Sportsman X2 800 EFI	769	PL-1003	KN-198
Trail Boss 330	325	PL-1005	KN-303
		PL-1005	KN-303C
2006 POLARIS			
Hawkeye 300 2x4	300	PL-1004	KN-303
		PL-1004	KN-303C
Hawkeye 300 4x4	329	PL-1004	KN-303
		PL-1004	KN-303C
Magnum 330 4x4	325	PL-1005	KN-303
		PL-1005	KN-303C
Outlaw 500	500	PL-5006	KN-112
Phoenix 200	200	PL-1004	
Predator 500	496	PL-5003	KN-112
Predator 500 TLD	496	PL-5003	KN-112
Ranger 4x4	500	PL-5008	KN-303
		PL-5008	KN-303C
Ranger 4x4 EFI	500	PL-5008	KN-303
		PL-5008	KN-303C
Ranger 6x6 EFI	700	PL-5008	KN-198
Ranger XP	700	PL-5008	KN-198
Sawtooth	200	PL-1004	
Scrambler 500 4x4	500	PL-1003	KN-303
		PL-1003	KN-303C
Sportsman 450	455	PL-1003	KN-303
		PL-1003	KN-303C
Sportsman 500 6x6	496	PL-1003	KN-303
		PL-1003	KN-303C
Sportsman 500 EFI	496	PL-1003	KN-303
		PL-1003	KN-303C
Sportsman 500 Efi X2	496	PL-1003	KN-303
		PL-1003	KN-303C
Sportsman 500 HO	500	PL-1003	KN-303
		PL-1003	KN-303C
Sportsman 700 EFI	700	PL-1003	KN-198
Sportsman 700 Twin	700	PL-1003	KN-198
Sportsman 700 Twin EFI	700		KN-198
Sportsman 800 EFI	800	PL-1003	KN-198
Sportsman X2	500	PL-1003	KN-303
		PL-1003	KN-303C
Trail Blazer 250	244	PL-1004	
Trail Boss 330	325	PL-1005	KN-303
		PL-1005	KN-303C
2005 POLARIS			
ATP500 HO	496	PL-1003	KN-303
		PL-1003	KN-303C
Magnum 330 2x4	330	PL-1005	KN-303
		PL-1005	KN-303C
Magnum 330 4x4	325	PL-1005	KN-303
		PL-1005	KN-303C
Phoenix 200	200	PL-1004	
Predator 500	496	PL-5003	KN-112
Predator 500 TLD	500	PL-5003	KN-112
Ranger 2x4	500	PL-5008	KN-303
		PL-5008	KN-303C
Ranger 4x4	500	PL-5008	KN-303
		PL-5008	KN-303C
Ranger 6x6	500	PL-5008	KN-303
		PL-5008	KN-303C

*Indicates 2 filters required ♦ - Intake kit available - see page 80 Applications updated daily at knfilters.com

2005 POLARIS

Vehicle	Engine Type	Air Filter	Oil Filter
Ranger XP	700	PL-5008	KN-198
Scrambler 500 4x4	500	PL-1003	KN-303
		PL-1003	KN-303C
Sportsman 400 4x4	427	PL-1003	KN-303
		PL-1003	KN-303C
Sportsman 500 6x6	496	PL-1003	KN-303
		PL-1003	KN-303C
Sportsman 500 HO	500	PL-1003	KN-303
		PL-1003	KN-303C
Sportsman 600 Twin	596	PL-1003	
Sportsman 600 Twin	596 - Built After 10-8-04	PL-1003	KN-198
Sportsman 700 Twin EFI	700	PL-1003	
Sportsman 700 Twin EFI	700 - Built After 10-8-04	PL-1003	KN-198
Sportsman 800 Twin	794		KN-198
Sportsman 800 Twin EFI	794	PL-1003	KN-198
Sportsman MV7	700	PL-1003	KN-198
Trail Blazer 250	244	PL-1004	
Trail Boss 330	325	PL-1005	KN-303
		PL-1005	KN-303C

2004 POLARIS

Vehicle	Engine Type	Air Filter	Oil Filter
ATP500 HO	496	PL-1003	KN-303
		PL-1003	KN-303C
Magnum 330 2x4	330	PL-1005	KN-303
		PL-1005	KN-303C
Magnum 330 4x4 Mossy Oak	330	PL-1005	KN-303
		PL-1005	KN-303C
Predator 500	496	PL-5003	KN-112
Ranger 2x4	500	PL-5008	KN-303
		PL-5008	KN-303C
Ranger 4x4	500	PL-5008	KN-303
		PL-5008	KN-303C
Ranger 6x6	500	PL-5008	KN-303
		PL-5008	KN-303C
Scrambler 500 4x4	500	PL-1003	KN-303
		PL-1003	KN-303C
Sportsman 400 4x4	427	PL-1003	KN-303
		PL-1003	KN-303C
Sportsman 500 HO	500	PL-1003	KN-303
		PL-1003	KN-303C
Sportsman 500 HO Mossy Oak	500	PL-1003	KN-303
		PL-1003	KN-303C
Sportsman 600 Twin	596	PL-1003	
Sportsman 600 Twin	596 - Built After 10-2-03	PL-1003	KN-198
Sportsman 600 Twin	596 - Built Before 10-2-03	PL-1003	KN-196
Sportsman 700 Twin	701	PL-1003	
Sportsman 700 Twin	701 - Built After 10-8-04	PL-1003	KN-198
Sportsman 700 Twin	701 - Built before 10-8-04	PL-1003	KN-196
Sportsman 700 Twin EFI	700	PL-1003	KN-196
Sportsman 700 Twin Mossy Oak	700	PL-1003	KN-196
Trail Blazer 250	244	PL-1004	
Trail Boss 330	325	PL-1005	KN-303
		PL-1005	KN-303C

2003 POLARIS

Vehicle	Engine Type	Air Filter	Oil Filter
Magnum 330 2x4	330	PL-1005	KN-303
		PL-1005	KN-303C
Magnum 330 4x4	325	PL-1005	KN-303
		PL-1005	KN-303C
Predator 500	496	PL-5003	KN-112
Ranger 2x4	425	PL-5008	KN-303
		PL-5008	KN-303C
Ranger 4x4	500	PL-5008	KN-303
		PL-5008	KN-303C
Scrambler 500 4x4	500	PL-1003	KN-303
		PL-1003	KN-303C
Sportsman 400 4x4	427	PL-1003	KN-303
		PL-1003	KN-303C
Sportsman 500 6x6	496	PL-1003	KN-303
		PL-1003	KN-303C
Sportsman 500 HO 4x4	500	PL-1003	KN-303
		PL-1003	KN-303C
Sportsman 600 4x4	603	PL-1003	KN-196
Sportsman 700 4x4	684	PL-1003	KN-196
Trail Blazer 250	281	PL-1004	
Trail Blazer 400 2x4	400	PL-1002	
Trail Boss 330	334	PL-1005	KN-303
		PL-1005	KN-303C

2002 POLARIS

Vehicle	Engine Type	Air Filter	Oil Filter
Magnum 325 4x4	325	PL-1005	KN-303
		PL-1005	KN-303C
Ranger 2x4	425		KN-303
			KN-303C
Scrambler 400 2x4	400	PL-1002	
Scrambler 400 4x4	377	PL-1002	
Scrambler 500 2x4	500	PL-1003	KN-303
		PL-1003	KN-303C
Scrambler 500 4x4	500	PL-1003	KN-303
		PL-1003	KN-303C
Sportsman 400 4x4	427	PL-1003	KN-303
		PL-1003	KN-303C
Sportsman 500	500	PL-1003	KN-303
		PL-1003	KN-303C
Sportsman 500 6x6	496	PL-1003	KN-303
		PL-1003	KN-303C
Sportsman 500 HO 4x4	500	PL-1003	KN-303
		PL-1003	KN-303C
Sportsman 700 4x4	684	PL-1003	KN-196
Trail Blazer 250	244	PL-1004	
Trail Blazer 250	281	PL-1004	
Trail Boss 325 2x4	325	PL-1005	KN-303
		PL-1005	KN-303C
Xplorer 400L	400	PL-1004	

2001 POLARIS

Vehicle	Engine Type	Air Filter	Oil Filter
Magnum 325 2x4	325		KN-303
			KN-303C
Magnum 325 2x4	325 - Built After 1-8-01	PL-1005	KN-303
Magnum 325 2x4	325 - Built Before 1-8-01	PL-1003	KN-303
Magnum 325 4x4	325		KN-303
			KN-303C
Magnum 325 4x4	325 - Built After 1-8-01	PL-1005	KN-303
Magnum 325 4x4	325 - Built Before 1-8-01	PL-1003	KN-303
Magnum 500 4x4	496	PL-1003	KN-303
		PL-1003	KN-303C

*Indicates 2 filters required ♦ - Intake kit available - see page 80 Applications updated daily at knfilters.com

Vehicle	Engine Type	Air Filter	Oil Filter
2001 POLARIS			
Ranger 2x4	425	PL-1003	KN-303
		PL-1003	KN-303C
Scrambler 400 2x4	400	PL-1002	
Scrambler 500 4x4	500	PL-1003	KN-303
		PL-1003	KN-303C
Sportsman 335	334	PL-1003	KN-303
		PL-1003	KN-303C
Sportsman 400 4x4	427	PL-1003	KN-303
		PL-1003	KN-303C
Sportsman 500	496	PL-1003	KN-303
		PL-1003	KN-303C
Sportsman 500 6x6	496	PL-1003	KN-303
		PL-1003	KN-303C
Sportsman 500 HO	500		KN-303
			KN-303C
Trail Blazer 250	244	PL-1004	
Trail Boss 325 2x4	325		KN-303
			KN-303C
Trail Boss 325 2x4	325 - Built After 12-11-00	PL-1005	KN-303
Trail Boss 325 2x4	325 - Built Before 12-11-00	PL-1003	KN-303
Xplorer 250 4x4	244	PL-1004	
Xplorer 400L	377	PL-1004	KN-303
		PL-1004	KN-303C
2000 POLARIS			
Magnum 325 2x4	325	PL-1003	KN-303
		PL-1003	KN-303C
Magnum 325 4x4	325	PL-1003	KN-303
		PL-1003	KN-303C
Magnum 500 4x4	496	PL-1003	KN-303
		PL-1003	KN-303C
Ranger 6x6	500	PL-5008	KN-303
		PL-5008	KN-303C
Scrambler 400 2x4	400	PL-1002	
Scrambler 400 4x4	377	PL-1002	
Scrambler 500 4x4	500	PL-1003	KN-303
		PL-1003	KN-303C
Sportsman 335	334	PL-1003	KN-303
		PL-1003	KN-303C
Sportsman 500	496	PL-1003	KN-303
		PL-1003	KN-303C
Sportsman 500 6x6	496	PL-1003	KN-303
		PL-1003	KN-303C
Sportsman 500 HO	500		KN-303
			KN-303C
Trail Blazer 250	244	PL-1001	
Trail Boss 325 2x4	325	PL-1003	KN-303
		PL-1003	KN-303C
Xpedition	427	PL-1003	KN-303
		PL-1003	KN-303C
Xpedition 325	325	PL-1003	KN-303
		PL-1003	KN-303C
Xplorer 250 4x4	244	PL-1001	
Xplorer 400L	377	PL-1002	KN-303
		PL-1002	KN-303C
1999 POLARIS			
Big Boss 6x6	496	PL-1002	KN-303
		PL-1002	KN-303C
Magnum 500 4x4	496	PL-1003	KN-303
		PL-1003	KN-303C
Ranger 6x6	500		KN-303
			KN-303C
Scrambler 400 4x4	377	PL-1002	

Vehicle	Engine Type	Air Filter	Oil Filter
1999 POLARIS			
Scrambler 500 4x4	500	PL-1003	KN-303
		PL-1003	KN-303C
Sport 400 2x4	400	PL-1002	
Sportsman 335	334	PL-1003	KN-303
		PL-1003	KN-303C
Sportsman 500	496	PL-1003	KN-303
		PL-1003	KN-303C
Trail Blazer 250	244	PL-1001	
Xplorer 300 4x4	281	PL-1001	
Xplorer 400L	377	PL-1002	KN-303
		PL-1002	KN-303C
1998 POLARIS			
Magnum 425 2x4	425	PL-1002	KN-303
		PL-1002	KN-303C
Magnum 425 4x4	427	PL-1002	KN-303
		PL-1002	KN-303C
Scrambler 400 4x4	377	PL-1002	
Scrambler 500 4x4	500	PL-1003	KN-303
		PL-1003	KN-303C
Sportsman 500	496	PL-1003	KN-303
		PL-1003	KN-303C
Trail Blazer 250	244	PL-1001	
Xplorer 300 4x4	281	PL-1001	
Xplorer 400L	377	PL-1001	KN-303
		PL-1001	KN-303C
1997 POLARIS			
Magnum 425 2x4	425	PL-1002	KN-303
		PL-1002	KN-303C
Magnum 425 4x4	427	PL-1002	KN-303
		PL-1002	KN-303C
Scrambler 400 4x4	377	PL-1002	
Scrambler 500 4x4	500	PL-1003	KN-303
		PL-1003	KN-303C
Sport 400L 2x4	400	PL-1002	
Sportsman 500	496	PL-1003	KN-303
		PL-1003	KN-303C
Trail Blazer 250	244	PL-1001	
Trail Boss 250	244	PL-1001	
Xplorer 400L	377	PL-1001	KN-303
		PL-1001	KN-303C
Xplorer 500 4x4	500	PL-1003	KN-303
		PL-1003	KN-303C
1996 POLARIS			
Magnum 425 4x4	427	PL-1002	KN-303
		PL-1002	KN-303C
Scrambler 400 4x4	377	PL-1002	
Sport 400L 2x4	400	PL-1002	
Sportsman 400 4x4	377	PL-1001	
Sportsman 500	496	PL-1003	KN-303
		PL-1003	KN-303C
Trail Blazer 250	244	PL-1001	
Trail Boss 250	244	PL-1001	
Xplorer 300 4x4	281	PL-1001	
Xplorer 400L	377	PL-1001	KN-303
		PL-1001	KN-303C
Xpress 300	300	PL-1001	
Xpress 400L	400	PL-1002	
1995 POLARIS			
Magnum 425 4x4	427	PL-1002	KN-303
		PL-1002	KN-303C
Sport 400L 2x4	400	PL-1001	
Sportsman 400 4x4	377	PL-1001	

*Indicates 2 filters required ♦ - Intake kit available - see page 80 Applications updated daily at knfilters.com

Vehicle	Engine Type	Air Filter	Oil Filter
1995 POLARIS			
Trail Boss 250	244	PL-1001	
1994 POLARIS			
Sportsman 400 4x4	377	PL-1001	
Trail Boss 250	244	PL-1001	
1993 POLARIS			
Trail Boss 250	244	PL-1001	
1992 POLARIS			
Trail Boss 350 2x4	350	PL-1001	
1991 POLARIS			
Trail Boss 250	244	PL-1001	
1990 POLARIS			
Trail Boss 250	244	PL-1001	
2010 PONTIAC			
G3	1.6L L4 F/I	33-2320	
G5	2.2L L4 F/I	33-2311	
G6	2.4L L4 F/I		HP-7000
G6	2.4L L4 F/I - OEM 10366901	33-2315	HP-7000
G6	2.4L L4 F/I - OEM 22676970	33-2296	HP-7000
G6	3.5L V6 F/I		HP-2006
G6	3.5L V6 F/I - OEM 10366901	33-2315 ♦	HP-2006
G6	3.5L V6 F/I - OEM 22676970	33-2296 ♦	HP-2006
G6	3.6L V6 F/I	33-2296	HP-1017
G6	3.9L V6 F/I	33-2315	HP-2006
Solstice	2.0L L4 F/I	33-2369	
Solstice	2.4L L4 F/I	33-2349	
Vibe	1.8L L4 F/I	33-2360	HP-7021
Vibe	2.4L L4 F/I		HP-1003
2009 PONTIAC			
G3	1.6L L4 F/I	33-2320	
G5	2.2L L4 F/I	33-2311	
G6	2.4L L4 F/I		HP-7000
G6	2.4L L4 F/I - OEM 10366901	33-2315	HP-7000
G6	2.4L L4 F/I - OEM 22676970	33-2296	HP-7000
G6	3.5L V6 F/I		HP-2006
G6	3.5L V6 F/I - OEM 10366901	33-2315 ♦	HP-2006
G6	3.5L V6 F/I - OEM 22676970	33-2296 ♦	HP-2006
G6	3.6L V6 F/I	33-2296	HP-1017
G6	3.9L V6 F/I	33-2315	HP-2006
G8	6.0L V8 F/I	33-2919 ♦	HP-1017
G8	6.2L V8 F/I	33-2919	HP-1017
Montana	3.9L V6 F/I		HP-2006
Solstice	2.0L L4 F/I	33-2369	HP-7000
Solstice	2.4L L4 F/I	33-2349 ♦	HP-7000
Torrent	3.4L V6 F/I	33-2296	HP-1001
Torrent	3.6L V6 F/I		HP-1017
Vibe	1.8L L4 F/I	33-2360	HP-7021
Vibe	2.4L L4 F/I	33-2326	HP-1003
2008 PONTIAC			
G3	1.6L L4 F/I		HP-1001
G5	2.2L L4 F/I	33-2311	HP-7000
G5	2.4L L4 F/I	33-2311	HP-7000
G6	2.4L L4 F/I		HP-7000
G6	2.4L L4 F/I - OEM 10366901	33-2315	HP-7000
G6	2.4L L4 F/I - OEM 22676970	33-2296	HP-7000
G6	3.5L V6 F/I		HP-2006
G6	3.5L V6 F/I - OEM 10366901	33-2315 ♦	HP-2006
G6	3.5L V6 F/I - OEM 22676970	33-2296 ♦	HP-2006
G6	3.6L V6 F/I	33-2296	HP-1017
G6	3.9L V6 F/I	33-2315	HP-2006
G8	6.0L V8 F/I	33-2919 ♦	HP-1017
Grand Prix	3.8L V6 F/I	33-2141-1	HP-1001
Grand Prix	5.3L V8 F/I	33-2334 ♦	HP-1017
Montana	3.9L V6 F/I		HP-2006
Solstice	2.0L L4 F/I	33-2369 ♦	HP-7000
Solstice	2.4L L4 F/I	33-2349 ♦	HP-7000
Torrent	3.4L V6 F/I	33-2296	HP-1001
Torrent	3.6L V6 F/I	33-2296	HP-1017
Vibe	1.8L L4 F/I	33-2252	HP-1003
Wave	1.6L L4 F/I	33-2320	HP-1001
2007 PONTIAC			
G3	1.6L L4 F/I		HP-1001
G5	2.2L L4 F/I	33-2311	HP-7000
G5	2.4L L4 F/I	33-2311	HP-7000
G6	2.4L L4 F/I	33-2315	HP-7000
G6	3.5L V6 F/I	33-2315 ♦	HP-2006
G6	3.6L V6 F/I	33-2296	HP-1017
G6	3.9L V6 F/I	33-2315	HP-2006
Grand Prix	3.8L V6 F/I	33-2141-1	HP-1001
Grand Prix	5.3L V8 F/I	33-2334 ♦	HP-1017
Montana	3.9L V6 F/I	33-2156	HP-2006
Solstice	2.0L L4 F/I	33-2369	HP-7000
Solstice	2.4L L4 F/I	33-2349 ♦	HP-7000
Torrent	3.4L V6 F/I	33-2296	HP-1001
Vibe	1.8L L4 F/I	33-2252	HP-1003
Wave	1.6L L4 F/I		HP-1001
2006 PONTIAC			
G3	1.6L L4 F/I		HP-1001
G6	2.4L L4 F/I	33-2315	HP-7000
G6	3.5L V6 F/I	33-2315 ♦	HP-1001
G6	3.9L V6 F/I	33-2315	HP-2006
Grand Prix	3.8L V6 F/I	33-2141-1	HP-1001
Grand Prix	5.3L V8 F/I	33-2334 ♦	HP-1007
GTO	6.0L V8 F/I	33-2314 ♦	HP-1007
Matiz G2	1.0L L4 F/I		HP-1003
Montana	3.5L V6 F/I	33-2156	HP-1001
Montana	3.9L V6 F/I	33-2156	HP-2006
Pursuit	2.2L L4 F/I		HP-7000
Pursuit	2.4L L4 F/I		HP-7000
Solstice	2.4L L4 F/I	33-2349 ♦	HP-7000
Torrent	3.4L V6 F/I	33-2296	HP-1001
Vibe	1.8L L4 F/I	33-2252	HP-1003
Vibe GT	1.8L L4 F/I	33-2252 ♦	HP-1003
Wave	1.6L L4 F/I	33-2320	HP-1001
2005 PONTIAC			
Aztek	3.4L V6 F/I	33-2156	HP-1001
Bonneville	3.8L V6 F/I	33-2141-1	HP-1001
Bonneville	4.6L V8 F/I	33-2063-1	HP-2006
G6	3.5L V6 F/I	33-2315 ♦	HP-1001
Grand Am	2.2L L4 F/I	33-2121-1	HP-7000
Grand Am	3.4L V6 F/I	33-2121-1	HP-1001
Grand Prix	3.8L V6 F/I	33-2141-1 ♦	HP-1001
Grand Prix	5.3L V8 F/I	33-2334	HP-1007
GTO	6.0L V8 F/I	33-2314 ♦	HP-1007
Matiz G2	1.0L L4 F/I		HP-1003
Montana	3.4L V6 F/I	33-2156	HP-1001

*Indicates 2 filters required ♦ - Intake kit available - see page 80 Applications updated daily at knfilters.com

Vehicle	Engine Type	Air Filter	Oil Filter
2005 PONTIAC			
Montana	3.5L V6 F/I	33-2156	HP-1001
Pursuit	2.2L L4 F/I		HP-7000
Sunfire	2.2L L4 F/I	33-2143	HP-7000
Vibe	1.8L L4 F/I	33-2252	HP-1003
Vibe GT	1.8L L4 F/I	33-2252 ♦	HP-1003
Wave	1.6L L4 F/I		HP-1001
2004 PONTIAC			
Aztek	3.4L V6 F/I	33-2156	HP-1001
Bonneville	3.8L V6 F/I	33-2141-1	HP-1001
Bonneville	4.6L V8 F/I	33-2063-1	HP-2006
Grand Am	2.2L L4 F/I	33-2121-1	HP-7000
Grand Am	3.4L V6 F/I	33-2121-1	HP-1001
Grand Prix	3.8L V6 F/I	33-2141-1 ♦	HP-1001
GTO	5.7L V8 F/I	33-2289 ♦	HP-1007
Montana	3.4L V6 F/I	33-2156	HP-1001
Sunfire	2.2L L4 F/I	33-2143 ♦	HP-7000
Sunfire Ecotec	2.2L L4 F/I	33-2143 ♦	HP-7000
Vibe	1.8L L4 F/I	33-2252 ♦	HP-1003
Vibe GT	1.8L L4 F/I	33-2252 ♦	HP-1003
2003 PONTIAC			
Aztek	3.4L V6 F/I	33-2156	HP-1001
Bonneville	3.8L V6 F/I	33-2141-1	HP-1001
Grand Am	2.2L L4 F/I	33-2121-1	HP-7000
Grand Am	3.4L V6 F/I	33-2121-1	HP-1001
Grand Prix	3.1L V6 F/I	33-2141-1	HP-1001
Grand Prix	3.8L V6 F/I	33-2141-1 ♦	HP-1001
Montana	3.4L V6 F/I	33-2156	HP-1001
Sunfire Ecotec	2.2L L4 F/I	33-2143 ♦	HP-7000
Vibe	1.8L L4 F/I	33-2252 ♦	HP-1003
Vibe GT	1.8L L4 F/I	33-2252 ♦	HP-1003
2002 PONTIAC			
Aztek	3.4L V6 F/I	33-2156	HP-1001
Bonneville	3.8L V6 F/I	33-2141-1	HP-1001
Firebird	3.8L V6 F/I	33-2118 ♦	HP-1001
Firebird	5.7L V8 F/I	33-2118 ♦	HP-1007
Grand Am	2.2L L4 F/I	33-2121-1	HP-7000
Grand Am	3.4L V6 F/I	33-2121-1	HP-1001
Grand Prix	3.1L V6 F/I	33-2141-1	HP-1001
Grand Prix	3.8L V6 F/I	33-2141-1 ♦	HP-1001
Montana	3.4L V6 F/I	33-2156	HP-1001
Sunfire	2.2L L4 F/I	33-2143	HP-1001
Sunfire	2.4L L4 F/I	33-2143	HP-1007
Sunfire Ecotec	2.2L L4 F/I	33-2143 ♦	HP-7000
2001 PONTIAC			
Aztek	3.4L V6 F/I	33-2156	HP-1001
Bonneville	3.8L V6 F/I	33-2141-1	HP-1001
Firebird	3.8L V6 F/I	33-2118 ♦	HP-1001
Firebird	5.7L V8 F/I	33-2118 ♦	HP-1007
Grand Am	2.4L L4 F/I	33-2121-1	HP-1007
Grand Am	3.4L V6 F/I	33-2121-1	HP-1001
Grand Prix	3.1L V6 F/I	33-2141-1	HP-1001
Grand Prix	3.8L V6 F/I	33-2141-1 ♦	HP-1001
Montana	3.4L V6 F/I	33-2156	HP-1001
Sunfire	2.2L L4 F/I	33-2143	HP-1001
Sunfire	2.4L L4 F/I	33-2143	HP-1007
2000 PONTIAC			
Bonneville	3.8L V6 F/I	33-2141-1	HP-1001
Firebird	3.8L V6 F/I	33-2118 ♦	HP-1001
Firebird	5.7L V8 F/I	33-2118 ♦	HP-1007
Firefly	1.3L L4 F/I		HP-1002
Grand Am	2.4L L4 F/I	33-2121-1	HP-1007

Vehicle	Engine Type	Air Filter	Oil Filter
2000 PONTIAC			
Grand Am	3.4L V6 F/I	33-2121-1	HP-1001
Grand Prix	3.1L V6 F/I	33-2141-1	HP-1001
Grand Prix	3.8L V6 F/I	33-2141-1 ♦	HP-1001
Montana	3.4L V6 F/I	33-2156	HP-1001
Sunfire	2.2L L4 F/I	33-2143	HP-1001
Sunfire	2.4L L4 F/I	33-2143	HP-1007
1999 PONTIAC			
Bonneville	3.8L V6 F/I	33-2086	HP-1001
Firebird	3.8L V6 F/I	33-2118 ♦	HP-1001
Firebird	5.7L V8 F/I	33-2118 ♦	HP-1007
Grand Am	2.4L L4 F/I	33-2121-1	HP-1007
Grand Am	3.4L V6 F/I	33-2121-1	HP-1001
Grand Prix	3.1L V6 F/I	33-2141-1	HP-1001
Grand Prix	3.8L V6 F/I	33-2141-1 ♦	HP-1001
Montana	3.4L V6 F/I	33-2156	HP-1001
Sunfire	2.2L L4 F/I	33-2143	HP-1001
Sunfire	2.4L L4 F/I	33-2143	HP-1007
Trans Sport	3.4L V6 F/I	33-2156	HP-1001
1998 PONTIAC			
Bonneville	3.8L V6 F/I	33-2086	HP-1001
Firebird	3.8L V6 F/I	33-2118	HP-1001
Firebird	5.7L V8 F/I	33-2118 ♦	HP-1007
Grand Am	2.4L L4 F/I	33-2068	HP-1007
Grand Am	3.1L V6 F/I	33-2068	HP-1001
Grand Prix	3.1L V6 F/I	33-2063-1	HP-1001
Grand Prix	3.8L V6 F/I	33-2063-1	HP-1001
Sunfire	2.2L L4 F/I	33-2143	HP-1001
Sunfire	2.4L L4 F/I	33-2143	HP-1007
Trans Sport	3.4L V6 F/I	33-2156	HP-1001
1997 PONTIAC			
Bonneville	3.8L V6 F/I	33-2086	HP-1001
Firebird	3.8L V6 F/I	33-2042	HP-1001
Firebird	5.7L V8 F/I		HP-2002
Firebird	5.7L V8 F/I - w/o ram air	33-2042 ♦	HP-2002
Firebird	5.7L V8 F/I - w/ram air	33-2035 ♦	HP-2002
Grand Am	2.4L L4 F/I	33-2068	HP-1007
Grand Am	3.1L V6 F/I	33-2068	HP-1001
Grand Prix	3.1L V6 F/I	33-2063-1	HP-1001
Grand Prix	3.8L V6 F/I	33-2063-1	HP-1001
Sunfire	2.2L L4 F/I	33-2143	HP-1001
Sunfire	2.4L L4 F/I	33-2143	HP-1007
Trans Sport	3.4L V6 F/I	33-2156	HP-1001
1996 PONTIAC			
Bonneville	3.8L V6 F/I	33-2086	HP-1001
Firebird	3.8L V6 F/I	33-2042	HP-1001
Firebird	5.7L V8 F/I		HP-2002
Firebird	5.7L V8 F/I - w/o ram air	33-2042 ♦	HP-2002
Firebird	5.7L V8 F/I - w/ram air	33-2035 ♦	HP-2002
Grand Am	2.4L L4 F/I	33-2068	HP-1007
Grand Am	3.1L V6 F/I	33-2068	HP-1001
Grand Prix	3.1L V6 F/I	33-2063-1	HP-1001
Grand Prix	3.4L V6 F/I	33-2063-1	HP-2001
Sunfire	2.2L L4 F/I	33-2143	HP-1001
Sunfire	2.4L L4 F/I	33-2143	HP-1007
Trans Sport	3.4L V6 F/I	33-2022	HP-1001
1995 PONTIAC			
Bonneville	3.8L V6 F/I	33-2086	HP-1001
Firebird	3.4L V6 F/I	33-2042 ♦	HP-1001
Firebird	3.8L V6 F/I	33-2042	HP-1001
Firebird	5.7L V8 F/I		HP-2002

*Indicates 2 filters required ♦ - Intake kit available - see page 80 Applications updated daily at knfilters.com

Vehicle	Engine Type	Air Filter	Oil Filter
1995 PONTIAC			
Firebird	5.7L V8 F/I - w/o ram air	33-2042 ♦	HP-2002
Grand Am	2.3L L4 F/I	33-2068	HP-1001
Grand Am	3.1L V6 F/I	33-2068	HP-1001
Grand Prix	3.1L V6 F/I	33-2063-1	HP-1001
Grand Prix	3.4L V6 F/I	33-2063-1	HP-2001
Sunfire	2.2L L4 F/I	33-2143	HP-1001
Sunfire	2.3L L4 F/I	33-2143	HP-1001
Sunrunner	1.6L L4 F/I	33-2700	
Trans Sport	3.8L V6 F/I	33-2022	HP-1001
1994 PONTIAC			
Bonneville	3.8L V6 F/I	33-2086	HP-1001
Firebird	3.4L V6 F/I	33-2042 ♦	HP-1001
Firebird	5.7L V8 F/I		HP-2002
Firebird	5.7L V8 F/I - w/o ram air	33-2042 ♦	HP-2002
Grand Am	2.3L L4 F/I	33-2068	HP-1001
Grand Am	3.1L V6 F/I	33-2068	HP-1001
Grand Prix	3.1L V6 F/I	33-2063-1	HP-1001
Grand Prix	3.4L V6 F/I	33-2063-1	HP-2001
Sunbird	2.0L L4 F/I	33-2022	HP-1001
Sunbird	3.1L V6 F/I	E-0850	HP-1001
1993 PONTIAC			
Bonneville	3.8L V6 F/I		HP-1001
Firebird	3.4L V6 F/I	33-2042 ♦	HP-1001
Firebird	5.7L V8 F/I		HP-2002
Firebird	5.7L V8 F/I - w/o ram air	33-2042 ♦	HP-2002
Grand Am	2.3L L4 F/I	33-2022	HP-1001
Grand Am	3.3L V6 F/I	33-2022	HP-1001
Grand Prix	3.1L V6 F/I	33-2038	HP-2001
Grand Prix	3.4L V6 F/I	33-2038	HP-2001
LeMans	1.6L L4 F/I	E-1068	HP-1001
Sunbird	2.0L L4 F/I	33-2022	HP-1001
Sunbird	3.1L V6 F/I	E-0850	HP-1001
1992 PONTIAC			
Bonneville	3.8L V6 F/I		HP-1001
Firebird	3.1L V6 F/I	E-0890	HP-2001
Firebird	5.0L V8 TBI	E-1450	HP-2002
Firebird	5.0L V8 TPI	E-0890	HP-2002
Firebird	5.7L V8 F/I	E-0890	HP-2002
Grand Am	2.3L L4 F/I	33-2022	HP-1001
Grand Am	3.3L V6 F/I	33-2022	HP-1001
Grand Prix	3.1L V6 F/I	33-2038	HP-2001
Grand Prix	3.4L V6 F/I	33-2038	HP-2001
LeMans	1.6L L4 F/I	E-1068	HP-1001
Sunbird	3.1L V6 F/I	E-0850	HP-1001
1991 PONTIAC			
Bonneville	3.8L V6 F/I	33-2022	HP-1001
Firebird	3.1L V6 F/I	E-0890	HP-2001
Firebird	5.0L V8 TBI	E-1450	HP-2002
Firebird	5.0L V8 TPI	E-0890	HP-2002
Firebird	5.7L V8 F/I	E-0890	HP-2002
Firefly	1.0L L3 F/I		HP-1002
Grand Prix	3.1L V6 F/I	33-2038	HP-2001
LeMans	1.6L L4 F/I	E-1068	HP-1001
Sunbird	2.0L L4 F/I	E-1015	HP-1001
Sunbird	3.1L V6 F/I	E-0850	HP-1001
1990 PONTIAC			
6000	3.1L V6 F/I	E-0850	HP-2001
Bonneville	3.8L V6 F/I	33-2022	HP-1001
Firebird	3.1L V6 F/I	E-0890	HP-2001
Firebird	5.0L V8 EFI	E-1450	HP-2002
1990 PONTIAC			
Firebird	5.0L V8 TBI	E-0890	HP-2002
Firebird	5.7L V8 F/I	E-0890	HP-2002
Grand Am	2.3L L4 F/I	33-2022	HP-1001
Grand Prix	3.1L V6 F/I		HP-2001
Grand Prix	3.1L V6 F/I - exc. Turbo	33-2038	HP-2001
LeMans	1.6L L4 F/I	E-1068	HP-1001
Sunbird	2.0L L4 F/I		HP-1001
Sunbird	2.0L L4 F/I - exc. Turbo	E-1015	HP-1001
Sunbird	2.0L L4 F/I - Turbo	E-0850	HP-1001
Trans Sport	3.1L V6 F/I	E-1065	HP-2001
1989 PONTIAC			
Bonneville	3.8L V6 F/I	33-2022	HP-1001
Firebird	2.8L V6 F/I	E-0890	HP-2001
Firebird	3.8L V6 F/I	E-0870	HP-3002
Firebird	5.0L V8 MFI	E-0890	HP-2002
Firebird	5.0L V8 TBI	E-1450	HP-2002
Firebird	5.7L V8 TPI	E-0890	HP-2002
Grand Prix	2.8L V6 F/I	33-2038	HP-2001
LeMans	1.6L L4 F/I	E-1068	HP-1001
Sunbird	2.0L L4 F/I		HP-1001
Sunbird	2.0L L4 F/I - exc. Turbo	E-1015	HP-1001
Sunbird	2.0L L4 F/I - Turbo	E-0850	HP-1001
1988 PONTIAC			
Bonneville	3.8L V6 F/I	33-2022	HP-1001
Fiero	2.5L L4 F/I	E-1025	
Fiero	2.8L V6 F/I	E-0890	HP-2001
Firebird	2.8L V6 F/I	E-0890	HP-2001
Firebird	5.0L V8 MFI	E-0890	HP-2002
Firebird	5.0L V8 TBI	E-1450	HP-2002
Firebird	5.7L V8 TPI	E-0890	HP-2002
1987 PONTIAC			
Bonneville	3.8L V6 SFI	33-2022	HP-1001
Fiero	2.5L L4 F/I	E-1025	HP-2001
Fiero	2.8L V6 F/I	E-0890	HP-2001
Firebird	2.8L V6 MFI	E-0890	HP-1001
Firebird	5.0L V8 CARB	E-1450	HP-2002
Firebird	5.0L V8 F/I	E-0890	HP-2002
Firebird	5.7L V8 F/I	E-0890	HP-2002
Grand Am	3.0L V6 F/I		HP-1001
Grand Prix	5.0L V8 CARB	E-1500	HP-2002
1986 PONTIAC			
Fiero	2.5L L4 F/I	E-1025	HP-2001
Fiero	2.8L V6 F/I	E-0890	HP-2001
Firebird	2.5L L4 F/I	E-1015	HP-1001
Firebird	2.8L V6 F/I	E-0890	HP-1001
Firebird	5.0L V8 CARB	E-1450	HP-2002
Firebird	5.0L V8 F/I	E-0890	HP-2002
Grand Prix	5.0L V8 CARB	E-1500	HP-2002
Parisienne	305 V8 CARB	E-1500	HP-2002
1985 PONTIAC			
Fiero	2.5L L4 F/I	E-1025	HP-2001
Fiero	2.8L V6 F/I	E-0890	HP-2001
Firebird	2.8L V6 F/I	E-0890	HP-1001
Firebird	5.0L V8 CARB	E-1450	HP-2002
Firebird	5.0L V8 F/I	E-0890	HP-2002
Grand Prix	5.0L V8 CARB	E-1500	HP-2002
Parisienne	5.0L V8 CARB	E-1500	HP-2002
1984 PONTIAC			
Fiero	2.5L L4 F/I	E-1025	HP-2001
Firebird	5.0L V8 CARB	E-1450	HP-2002

*Indicates 2 filters required ♦ - Intake kit available - see page 80 Applications updated daily at knfilters.com

Vehicle	Engine Type	Air Filter	Oil Filter
1984 PONTIAC			
Grand Prix	3.8L V6 CARB	E-1150	HP-1001
Grand Prix	5.0L V8 CARB	E-1500	HP-2002
1983 PONTIAC			
Firebird	5.0L V8 CARB	E-1450	HP-2002
Firebird	5.0L V8 TBI	E-1117*	HP-2002
1982 PONTIAC			
Firebird	5.0L V8 CARB	E-1450	HP-2002
Firebird	5.0L V8 TBI	E-1117*	HP-2002
1981 PONTIAC			
Firebird	4.9L V8 CARB		HP-1001
Firebird	4.9L V8 CARB - exc. Turbo	E-1410	HP-1001
Firebird	4.9L V8 CARB - Turbo	E-1430	HP-1001
Firebird	5.0L V8 CARB	E-1500	HP-2002
Grand Prix	3.8L V6 CARB - VIN A	E-1150	HP-1001
Grand Prix	3.8L V6 CARB - VIN K	E-1065	HP-2001
1980 PONTIAC			
Firebird	301 V8 CARB		HP-1001
Firebird	301 V8 CARB - w/o ram air	E-1450	HP-1001
Firebird	301 V8 CARB - w/ram air	E-1500	HP-1001
Firebird	305 V8 CARB	E-1500	HP-2002
Firebird Trans Am	305 V8 CARB	E-1410	HP-2002
1979 PONTIAC			
Firebird	301 V8 2 BBL.	E-1450	HP-1001
Firebird	301 V8 4 BBL.		HP-1001
Firebird	301 V8 4 BBL. - w/o ram air	E-1450	HP-1001
Firebird	301 V8 4 BBL. - w/ram air	E-1590	HP-1001
Firebird	305 V8 CARB	E-1450	HP-2002
Firebird	350 V8 CARB	E-1500	HP-2002
Firebird	400 V8 CARB		HP-2003
Firebird	400 V8 CARB - ram air	E-1590	HP-2003
Firebird	400 V8 CARB - w/o ram air	E-1650	HP-2003
Firebird	403 V8 CARB	E-1650	HP-2006
Firebird Trans Am	403 V8 CARB	E-1590	HP-2006
1978 PONTIAC			
Bonneville	301 V8 2 BBL.	E-1450	HP-1001
Bonneville	301 V8 4 BBL.	E-1450	HP-1001
Firebird	231 V6 CARB	E-1070	HP-1001
Firebird	305 V8 CARB	E-1450	HP-2002
Firebird	350 V8 CARB	E-1500	HP-2002
Firebird	400 V8 CARB		HP-2003
Firebird	400 V8 CARB - ram air	E-1590	HP-2003
Firebird	400 V8 CARB - w/o ram air	E-1650	HP-2003
Firebird	403 V8 CARB		HP-2006
Firebird	403 V8 CARB - ram air	E-1590	HP-2006
Firebird	403 V8 CARB - w/o ram air	E-1650	HP-2006
1977 PONTIAC			
Firebird	350 V8 CARB	E-1650	HP-2003
Firebird	400 V8 CARB		HP-2003
Firebird	400 V8 CARB - ram air	E-1590	HP-2003
Firebird	400 V8 CARB - w/o ram air	E-1650	HP-2003
Firebird	403 V8 CARB		HP-2003
Firebird	403 V8 CARB - ram air	E-1590	HP-2003
Firebird	403 V8 CARB - w/o ram air	E-1650	HP-2003
Grand Prix	350 V8 CARB	E-1650	HP-2003
1976 PONTIAC			
Catalina	400 V8 4 BBL.	E-1650	HP-2003
Firebird	350 V8 CARB	E-1650	HP-2003
Firebird	400 V8 CARB		HP-2003
Firebird	400 V8 CARB - ram air	E-1590	HP-2003
Firebird	400 V8 CARB - w/o ram air	E-1650	HP-2003
Firebird	455 V8 CARB		HP-2003
Firebird	455 V8 CARB - ram air	E-1590	HP-2003
Firebird	455 V8 CARB - w/o ram air	E-1650	HP-2003
Grand Prix	400 V8 4 BBL.	E-1650	HP-2003
1975 PONTIAC			
Firebird	350 V8 CARB	E-1650	HP-2003
Firebird	400 V8 CARB		HP-2003
Firebird	400 V8 CARB - ram air	E-1590	HP-2003
Firebird	400 V8 CARB - w/o ram air	E-1650	HP-2003
Firebird	455 V8 CARB	E-1590	HP-2003
1974 PONTIAC			
Firebird	350 V8 CARB	E-1650	HP-2003
Firebird	400 V8 CARB		HP-2003
Firebird	400 V8 CARB - ram air	E-1590	HP-2003
Firebird	400 V8 CARB - w/o ram air	E-1650	HP-2003
Firebird	455 V8 CARB		HP-2003
Firebird	455 V8 CARB - ram air	E-1590	HP-2003
Firebird	455 V8 CARB - w/o ram air	E-1650	HP-2003
Grand Prix	455 V8 CARB	E-1650	HP-2003
LeMans	455 V8 CARB	E-1650	HP-2003
Ventura	350 V8 CARB		HP-2003
Ventura	350 V8 CARB - w/o ram air	E-1650	HP-2003
Ventura	350 V8 CARB - w/ram air	E-1590	HP-2003
1973 PONTIAC			
Firebird	350 V8 CARB	E-1650	HP-2003
Firebird	400 V8 CARB		HP-2003
Firebird	400 V8 CARB - ram air	E-1590	HP-2003
Firebird	400 V8 CARB - w/o ram air	E-1650	HP-2003
Firebird	455 V8 CARB		HP-2003
Firebird	455 V8 CARB - ram air	E-1590	HP-2003
Firebird	455 V8 CARB - w/o ram air	E-1650	HP-2003
Grand Prix	400 V8 CARB	E-1650	HP-2003
GTO	455 V8 CARB	E-1650	HP-2003
Ventura	350 V8 CARB	E-1650	HP-2003
1972 PONTIAC			
Firebird	350 V8 CARB	E-1650	HP-2003
Firebird	400 V8 CARB		HP-2003
Firebird	400 V8 CARB - ram air	E-1590	HP-2003
Firebird	400 V8 CARB - w/o ram air	E-1650	HP-2003
Firebird	455 V8 CARB		HP-2003
Firebird	455 V8 CARB - ram air	E-1590	HP-2003
Firebird	455 V8 CARB - w/o ram air	E-1650	HP-2003
Grand Prix	400 V8 CARB	E-1650	HP-2003
Grand Prix	455 V8 CARB	E-1650	HP-2003
GTO	400 V8 CARB		HP-2003
GTO	400 V8 CARB - w/o ram air	E-1650	HP-2003
GTO	400 V8 CARB - w/ram air	E-1500	HP-2003
GTO	455 V8 CARB		HP-2003
GTO	455 V8 CARB - w/o ram air	E-1650	HP-2003

*Indicates 2 filters required ♦ - Intake kit available - see page 80 Applications updated daily at knfilters.com

Vehicle	Engine Type	Air Filter	Oil Filter
1972 PONTIAC			
GTO	455 V8 CARB - w/ram air	E-1500	HP-2003
LeMans	350 V8 CARB	E-1220	HP-2003
LeMans	400 V8 4 BBL. - w/o ram air	E-1650	
Ventura	350 V8 CARB	E-1650	HP-2003
1971 PONTIAC			
Firebird	350 V8 CARB	E-1650	HP-2003
Firebird	400 V8 CARB - ram air	E-1590	
Firebird	400 V8 CARB - w/o ram air	E-1650	
Firebird	455 V8 CARB	E-1650	HP-2003
Grand Prix	400 V8 4 BBL.	E-1650	HP-2003
GTO	400 V8 CARB	E-1650	HP-2003
GTO	455 V8 CARB		HP-2003
GTO	455 V8 CARB - w/o ram air	E-1650	HP-2003
GTO	455 V8 CARB - w/ram air	E-1590	HP-2003
1970 PONTIAC			
Firebird	400 V8 CARB		HP-2003
Firebird	400 V8 CARB - ram air	E-1590	HP-2003
Firebird	400 V8 CARB - w/o ram air	E-1650	HP-2003
Grand Prix	400 V8 4 BBL.	E-1650	HP-2003
Grand Prix	455 V8 CARB	E-1650	HP-2003
GTO	400 V8 2 BBL.	E-1220	HP-2003
GTO	400 V8 4 BBL.		HP-2003
GTO	400 V8 4 BBL. - w/o ram air	E-1650	HP-2003
GTO	400 V8 4 BBL. - w/ram air	E-1590	HP-2003
GTO	455 V8 CARB		HP-2003
GTO	455 V8 CARB - w/o ram air	E-1650	HP-2003
GTO	455 V8 CARB - w/ram air	E-1590	HP-2003
LeMans	350 V8 CARB	E-1220	HP-2003
LeMans	400 V8 4 BBL.	E-1650	HP-2003
LeMans	455 V8 CARB	E-1650	HP-2003
1969 PONTIAC			
Bonneville	400 V8 CARB - w/o ram air	E-1650	
Bonneville	428 V8 CARB - w/o ram air	E-1650	
Catalina	400 V8 CARB - w/o ram air	E-1650	
Firebird	350 V8 CARB		HP-2003
Firebird	350 V8 CARB - w/o ram air	E-1650	HP-2003
Firebird	350 V8 CARB - w/ram air	E-1220	HP-2003
Firebird	400 V8 CARB		HP-2003
Firebird	400 V8 CARB - w/o ram air	E-1650	HP-2003
Firebird	400 V8 CARB - w/ram air	E-1220	HP-2003
Grand Prix	400 V8 2 BBL. - w/o ram air	E-1650	
Grand Prix	400 V8 4 BBL.	E-1650	HP-2003
Grand Prix	428 V8 CARB - w/o ram air	E-1650	
GTO	400 V8 2 BBL.	E-1220	HP-2003
GTO	400 V8 4 BBL.		HP-2003
GTO	400 V8 4 BBL. - w/o ram air	E-1650	HP-2003
GTO	400 V8 4 BBL. - w/ram air	E-1590	HP-2003
LeMans	350 V8 CARB		HP-2003
LeMans	350 V8 CARB - w/o ram air	E-1650	HP-2003
1969 PONTIAC			
LeMans	350 V8 CARB - w/ram air	E-1220	HP-2003
Tempest	400 V8 CARB - w/o ram air	E-1650	
1968 PONTIAC			
Bonneville	400 V8 4 BBL.	E-1650	HP-2003
Firebird	350 V8 2 BBL.	E-1220	HP-2003
Firebird	350 V8 4 BBL.	E-1650	HP-2003
Firebird	400 V8 2 BBL.	E-1220	HP-2003
Firebird	400 V8 4 BBL.	E-1650	HP-2003
GTO	400 V8 CARB	E-1650	HP-2003
LeMans	350 V8 2 BBL.	E-1220	HP-2003
LeMans	350 V8 4 BBL.	E-1650	HP-2003
LeMans	400 V8 4 BBL.	E-1650	HP-2003
1967 PONTIAC			
Bonneville	400 V8 2 BBL.	E-1220	
Bonneville	400 V8 4 BBL.	E-1520	
Catalina	428 V8 CARB	E-1650	HP-2003
Firebird	230 L6 CARB	E-1070	HP-2003
Firebird	326 V8 CARB	E-1220	HP-2003
Firebird	400 V8 CARB	E-1650	HP-2003
GTO	400 V8 CARB	E-1650	HP-2003
LeMans	326 V8 CARB	E-1220	HP-2003
1966 PONTIAC			
Catalina	421 V8 CARB	E-3223	
GTO	389 V8 CARB	E-3223	HP-2003
LeMans	326 V8 CARB	E-1220	HP-2003
1965 PONTIAC			
Catalina	389 V8 2 BBL.	E-1230	HP-2003
Catalina	389 V8 4 BBL.	E-1520	HP-2003
GTO	389 V8 2 BBL.	E-3223	HP-2003
GTO	389 V8 3x2BBL.	E-1230	HP-2003
GTO	389 V8 4 BBL.	E-1520	HP-2003
LeMans	326 V8 CARB	E-1220	HP-2003
1964 PONTIAC			
GTO	389 V8 CARB	E-1520	
1962 PONTIAC			
Bonneville	389 V8 3x2BBL.	E-3223	HP-2003
Bonneville	389 V8 4 BBL.	E-1520	HP-2003
Grand Prix	389 V8 3x2BBL.	E-3223	HP-2003
Star Chief	389 V8 3x2BBL.	E-3223	HP-2003
2013 PORSCHE			
Cayenne	3.0L V6 DSL	33-2857	
Cayenne	3.0L V6 F/I	33-2857	
Cayenne	3.6L V6 F/I	33-2857	
Cayenne	4.8L V8 F/I	33-2857*	
2012 PORSCHE			
911	3.6L H6 F/I	E-1999	
911	3.8L H6 F/I - exc. Turbo	E-1999	
Boxster	2.9L H6 F/I	E-2295	
Boxster	3.4L H6 F/I	E-2295	
Cayenne	3.0L V6 DSL	33-2857	
Cayenne	3.0L V6 F/I	33-2857	
Cayenne	3.6L V6 F/I	33-2857	
Cayenne	4.8L V8 F/I	33-2857*	
Cayman	2.9L H6 F/I	E-2295	
Cayman	3.4L H6 F/I	E-2295	
2011 PORSCHE			
911	3.6L H6 F/I - exc. Turbo	E-1999	

*Indicates 2 filters required ♦ - Intake kit available - see page 80 Applications updated daily at knfilters.com

Vehicle	Engine Type	Air Filter	Oil Filter
2011 PORSCHE			
911	3.8L H6 F/I - exc. Turbo	E-1999	
Boxster	2.9L H6 F/I	E-2295	
Boxster	3.4L H6 F/I	E-2295	
Cayenne	3.0L V6 DSL	33-2857	
Cayenne	3.0L V6 F/I	33-2857	
Cayenne	3.6L V6 F/I	33-2857	
Cayenne	4.8L V8 F/I	33-2857*	
Cayman	2.9L H6 F/I	E-2295	
Cayman	3.4L H6 F/I	E-2295	
2010 PORSCHE			
911	3.6L H6 F/I	E-1999	HP-7011
911	3.8L H6 F/I		HP-7011
911	3.8L H6 F/I - exc. Turbo	E-1999	HP-7011
911 GT3	3.8L H6 F/I		HP-7011
Boxster	2.9L H6 F/I	E-2295	
Boxster	3.4L H6 F/I	E-2295	
Cayenne	3.0L V6 DSL	33-2857	
Cayenne	3.6L V6 F/I	33-2857	HP-7005
Cayenne	4.8L V8 F/I	33-2857*	
Cayman	2.9L H6 F/I	E-2295	
Cayman	3.4L H6 F/I	E-2295	
2009 PORSCHE			
911	3.6L H6 F/I		HP-7011
911	3.6L H6 F/I - exc. Turbo	E-1999	HP-7011
911	3.8L H6 F/I	E-1999	HP-7011
Boxster	2.7L H6 F/I	E-2295	
Boxster	2.9L H6 F/I	E-2295	HP-7011
Boxster	3.4L H6 F/I	E-2295	HP-7011
Cayenne	3.6L V6 F/I	33-2857	HP-7005
Cayenne	4.8L V8 F/I	33-2857*	
Cayman	2.7L H6 F/I	E-2295	
Cayman	2.9L H6 F/I	E-2295	HP-7011
Cayman	3.4L H6 F/I	E-2295	HP-7011
2008 PORSCHE			
911	3.6L H6 F/I	33-2786	HP-7011
911	3.8L H6 F/I	33-2786	HP-7011
911 GT2	3.6L H6 F/I		HP-7011
911 GT3	3.6L H6 F/I		HP-7011
911 Turbo	3.6L H6 F/I		HP-7011
Boxster	2.7L H6 F/I	E-2295	HP-7011
Boxster	3.2L H6 F/I	E-2295	
Boxster	3.4L H6 F/I	E-2295	HP-7011
Cayenne	3.6L V6 F/I	33-2857	HP-7005
Cayenne	4.8L V8 F/I	33-2857*	
Cayman	2.7L H6 F/I	E-2295	HP-7011
Cayman	3.4L H6 F/I	E-2295	HP-7011
2007 PORSCHE			
911	3.6L H6 F/I		HP-7011
911	3.6L H6 F/I - exc. Turbo	33-2786	HP-7011
911	3.8L H6 F/I	33-2786	HP-7011
911 GT3	3.6L H6 F/I		HP-7011
Boxster	2.7L H6 F/I	E-2295	HP-7011
Boxster	3.2L H6 F/I	E-2295	
Boxster	3.4L H6 F/I	E-2295	HP-7011
Cayenne	4.5L V8 F/I	33-2857*	HP-7011
Cayenne	4.8L V8 F/I	33-2857*	
Cayman	2.7L H6 F/I	E-2295	HP-7011
Cayman	3.4L H6 F/I	E-2295	HP-7011
2006 PORSCHE			
911	3.6L H6 F/I	33-2786	HP-7011
911	3.8L H6 F/I	33-2786	HP-7011
Boxster	2.7L H6 F/I	E-2295	HP-7011
Boxster	3.2L H6 F/I	E-2295	HP-7011
Boxster	3.4L H6 F/I	E-2295	HP-7011
Carrera GT	5.7L V10 F/I		HP-7011
Cayenne	3.2L V6 F/I	33-2857	HP-7005
Cayenne	4.5L V8 F/I	33-2857*	HP-7011
Cayman	2.7L H6 F/I	E-2295	HP-7011
Cayman	3.4L H6 F/I	E-2295	HP-7011
2005 PORSCHE			
911	3.4L H6 F/I	33-2786	
911	3.6L H6 F/I		HP-7011
911	3.6L H6 F/I - exc. Turbo	33-2786 ♦	HP-7011
911	3.6L H6 F/I - Turbo	33-2189	HP-7011
911	3.8L H6 F/I	33-2786	HP-7011
911 GT3	3.6L H6 F/I	33-2786	HP-7011
Boxster	2.7L H6 F/I	E-2295	HP-7011
Boxster	3.2L H6 F/I	E-2295	HP-7011
Carrera GT	5.7L V10 F/I		HP-7011
Cayenne	3.2L V6 F/I	33-2857	HP-7005
Cayenne	4.5L V8 F/I	33-2857*	HP-7011
Cayman	3.4L H6 F/I	E-2295	HP-7011
2004 PORSCHE			
911	3.4L H6 F/I	33-2786	
911	3.6L H6 F/I		HP-7011
911	3.6L H6 F/I - exc. Turbo	33-2786 ♦	HP-7011
911	3.6L H6 F/I - Turbo	33-2189	HP-7011
911	3.8L H6 F/I	33-2786	
911 GT3	3.6L H6 F/I	33-2786	HP-7011
Boxster	2.7L H6 F/I	33-2773	HP-7011
Boxster	3.2L H6 F/I	33-2773	HP-7011
Carrera 996	3.6L H6 F/I		HP-7011
Carrera 996	3.6L H6 F/I - Non-Turbo	33-2786	HP-7011
Carrera GT	5.7L V10 F/I		HP-7011
Cayenne	3.2L V6 F/I	33-2857	HP-7005
Cayenne	4.5L V8 F/I	33-2857*	HP-7011
2003 PORSCHE			
911	3.4L H6 F/I	33-2786	
911 Carrera	3.6L H6 F/I	33-2786 ♦	HP-7011
911 GT2	3.6L H6 F/I	33-2189	HP-7011
911 GT3	3.6L H6 F/I	33-2189	HP-7011
911 Turbo	3.6L H6 F/I	33-2189	HP-7011
Boxster	2.7L H6 F/I	33-2773	HP-7011
Boxster	3.2L H6 F/I	33-2773	HP-7011
Carrera 996	3.6L H6 F/I		HP-7011
Carrera 996	3.6L H6 F/I - Non-Turbo	33-2786	HP-7011
Cayenne	3.2L V6 F/I	33-2857	HP-7005
Cayenne	4.5L V8 F/I	33-2857*	HP-7011
2002 PORSCHE			
911	3.4L H6 F/I	33-2786	
911	3.6L H6 F/I	33-2786 ♦	HP-7011
911 Carrera	3.6L H6 F/I	33-2786 ♦	HP-7011
911 GT2	3.6L H6 F/I	33-2189	HP-7011
911 GT3	3.6L H6 F/I	33-2189	HP-7011
911 Turbo	3.6L H6 F/I	33-2189	HP-7011
Boxster	2.7L H6 F/I	33-2773	HP-7011
Boxster	3.2L H6 F/I	33-2773	HP-7011
Carrera 996	3.6L H6 F/I		HP-7011

*Indicates 2 filters required ♦ - Intake kit available - see page 80 Applications updated daily at knfilters.com

Vehicle	Engine Type	Air Filter	Oil Filter
2002 PORSCHE			
Carrera 996	3.6L H6 F/I - Non-Turbo	33-2786	HP-7011
2001 PORSCHE			
911	3.4L H6 F/I	33-2786 ♦	HP-7011
911	3.6L H6 F/I		HP-7011
911	3.6L H6 F/I - US	33-2189 ♦	HP-7011
911 Carrera	3.6L H6 F/I	33-2786	HP-7011
911 GT2	3.6L H6 F/I	33-2189	HP-7011
911 GT3	3.6L H6 F/I	33-2189	HP-7011
911 Turbo	3.6L H6 F/I	33-2189	HP-7011
Boxster	2.7L H6 F/I	33-2773	HP-7011
Boxster	3.2L H6 F/I	33-2773	HP-7011
Carrera 996	3.4L H6 F/I	33-2786	HP-7011
2000 PORSCHE			
911	3.4L H6 F/I	33-2786 ♦	HP-7011
911	3.6L H6 F/I	33-2189	HP-7011
Boxster	2.7L H6 F/I	33-2773	HP-7011
Boxster	3.2L H6 F/I	33-2773	HP-7011
Carrera 996	3.4L H6 F/I	33-2786	HP-7011
1999 PORSCHE			
911	3.4L H6 F/I	33-2786 ♦	HP-7011
911	3.6L H6 F/I	33-2189	
Boxster	2.5L H6 F/I	33-2773	HP-7011
Boxster	2.7L H6 F/I	33-2773	HP-7011
Boxster	3.2L H6 F/I	33-2773	HP-7011
Carrera 996	3.4L H6 F/I	33-2786	HP-7011
1998 PORSCHE			
911	3.4L H6 F/I	33-2786	HP-7011
911	3.6L H6 F/I	33-2731	
Boxster	2.5L H6 F/I	33-2773	HP-7011
1997 PORSCHE			
911	3.6L H6 F/I	33-2731	
911	3.8L H6 F/I	33-2731	
Boxster	2.5L H6 F/I	33-2773	HP-7011
1996 PORSCHE			
911	3.6L H6 F/I	33-2731	
911	3.8L H6 F/I	33-2731	
1995 PORSCHE			
911	3.6L H6 F/I	33-2731	
911	3.8L H6 F/I	33-2731	
928	5.4L V8 F/I	33-2591	
968	3.0L L4 F/I	33-2722	HP-4001
1994 PORSCHE			
911	3.6L H6 F/I - exc. Turbo	33-2077	HP-4004
911	3.6L H6 F/I - Turbo	33-2077	HP-4001
928	4.9L V8 F/I	33-2591	
928	5.4L V8 F/I	33-2591	
968	3.0L L4 F/I	33-2722	HP-4001
1993 PORSCHE			
911	3.6L H6 F/I		HP-4004
911	3.6L H6 F/I - exc. Turbo	33-2077	HP-4004
911	3.6L H6 F/I - Turbo	33-2530	HP-4004
928	5.4L V8 F/I	33-2591	
968	3.0L L4 F/I	33-2722	HP-4001
1992 PORSCHE			
911	3.3L H6 F/I	33-2530	HP-4001
911	3.6L H6 F/I	33-2077	HP-4004
928	4.9L V8 F/I	33-2591	
1992 PORSCHE			
928	5.4L V8 F/I	33-2591	
968	3.0L L4 F/I	33-2722	HP-4001
1991 PORSCHE			
911	3.3L H6 F/I	33-2530	HP-4001
911	3.6L H6 F/I	33-2077	HP-4004
928	4.9L V8 F/I	33-2591	
928	5.0L V8 F/I	33-2591	
928	5.4L V8 F/I	33-2591	
944	3.0L L4 F/I	33-2807	HP-4001
1990 PORSCHE			
911	3.3L H6 F/I	33-2530	
911	3.6L H6 F/I	33-2077	HP-4004
928	4.9L V8 F/I	33-2591	
928	5.0L V8 F/I	33-2591	
944	2.5L L4 F/I - exc. Turbo	33-2079	
944	3.0L L4 F/I	33-2807	HP-4001
1989 PORSCHE			
911	3.2L H6 F/I	33-2076	HP-4004
911	3.6L H6 F/I	33-2077	HP-4004
928	4.9L V8 F/I	33-2591	
928	5.0L V8 F/I	33-2591	
944	2.5L L4 F/I		HP-4001
944	2.5L L4 F/I - Non-US, exc. Turbo	33-2079	HP-4001
944	2.5L L4 F/I - Non-US, Turbo	33-2081	HP-4001
944	2.5L L4 F/I - US	33-2081	HP-4001
944	2.7L L4 F/I	33-2079	HP-4001
944	3.0L L4 F/I	33-2807	HP-4001
1988 PORSCHE			
911	3.2L H6 F/I	33-2076	HP-4004
911	3.3L H6 F/I	33-2530	HP-4004
911	3.6L H6 F/I	33-2077	HP-4004
924	2.5L L4 F/I	33-2079	HP-4001
928	4.9L V8 F/I	33-2591	
928	5.0L V8 F/I	33-2591	
930	3.0L F6 F/I - Turbo	33-2530	
944	2.5L L4 F/I		HP-4001
944	2.5L L4 F/I - exc. Turbo	33-2079	HP-4001
944	2.5L L4 F/I - Turbo	33-2081	HP-4001
944	2.7L L4 F/I	33-2079	
944	3.0L L4 F/I	33-2807	
944 S	2.5L L4 F/I	33-2640	HP-4001
1987 PORSCHE			
911	3.2L H6 F/I	33-2076	HP-4004
911	3.3L H6 F/I	33-2530	HP-4004
924	2.0L L4 F/I	33-2003	
924	2.5L L4 F/I	33-2079	HP-4001
928	4.9L V8 F/I	33-2591	
928	5.0L V8 F/I	33-2591	
930	3.0L F6 F/I - Turbo	33-2530	
944	2.5L L4 F/I		HP-4001
944	2.5L L4 F/I - exc. Turbo	33-2079	HP-4001
944	2.5L L4 F/I - Turbo	33-2081	HP-4001
944 S	2.5L L4 F/I	33-2640	
1986 PORSCHE			
911	3.2L H6 F/I	33-2076	HP-4004
911	3.3L H6 F/I	33-2530	HP-4004
928	4.6L V8 F/I	33-2591	
928	4.9L V8 F/I	33-2591	
928	5.0L V8 F/I	33-2591	
930	3.0L F6 F/I - Turbo	33-2530	

*Indicates 2 filters required ♦ - Intake kit available - see page 80 Applications updated daily at knfilters.com

Vehicle	Engine Type	Air Filter	Oil Filter
1986 PORSCHE			
944	2.5L L4 F/I		HP-4001
944	2.5L L4 F/I - exc. Turbo	33-2079	HP-4001
944	2.5L L4 F/I - Turbo	33-2081	HP-4001
944 S	2.5L L4 F/I	33-2640	
1985 PORSCHE			
911	3.2L H6 F/I	33-2076	HP-4004
911	3.2L H6 F/I - Turbo	33-2530	HP-4004
911	3.3L H6 F/I	33-2530	HP-4004
928	4.6L V8 F/I	33-2591	
928	4.7L V8 F/I	33-2591	
928	4.9L V8 F/I	33-2591	
928	5.0L V8 F/I	33-2591	
930	3.0L F6 F/I - Turbo	33-2530	
944	2.5L L4 F/I		HP-4001
944	2.5L L4 F/I - Non-US, exc. Turbo	33-2079	HP-4001
944	2.5L L4 F/I - Non-US, Turbo	33-2081	HP-4001
944	2.5L L4 F/I - US	33-2079	HP-4001
1984 PORSCHE			
911	3.2L H6 F/I		HP-4004
911	3.2L H6 F/I - exc. Turbo	33-2076	HP-4004
911	3.2L H6 F/I - Turbo	33-2530	HP-4004
928	4.6L V8 F/I	33-2591	
928	4.7L V8 F/I	33-2591	
944	2.5L L4 F/I	33-2079	HP-4001
1983 PORSCHE			
911	3.0L H6 F/I	33-2004	HP-4004
911	3.2L H6 F/I	33-2076	
928	4.6L V8 F/I	33-2591	
928	4.7L V8 F/I	33-2591	
944	2.5L L4 F/I	33-2079	HP-4001
1982 PORSCHE			
911	3.0L H6 F/I	33-2004	HP-4004
911	3.3L H6 F/I	33-2530	
924	2.0L L4 F/I - exc. Turbo	33-2003	
924	2.0L L4 F/I - Turbo	33-2570 ♦	
924 Carrera GT	2.0L L4 F/I	33-2570	
928	4.4L V8 F/I	33-2591	
928	4.5L V8 F/I	33-2591	
928	4.6L V8 F/I	33-2591	
1981 PORSCHE			
911	3.0L H6 F/I	33-2004	HP-4004
924	2.0L L4 F/I		HP-2005
924	2.0L L4 F/I - exc. Turbo	33-2003	HP-2005
924	2.0L L4 F/I - Turbo	33-2570 ♦	HP-2005
924 Carrera GT	2.0L L4 F/I	33-2570	
928	4.4L V8 F/I	33-2591	
928	4.5L V8 F/I	33-2591	
928	4.6L V8 F/I	33-2591	
1980 PORSCHE			
911	3.0L H6 F/I	33-2004	HP-4004
911	3.0L H6 F/I - Non-US, 180BHP	33-2530	HP-4004
911	3.0L H6 F/I - Non-US, Exc., 180BHP	33-2004	HP-4004
911	3.3L H6 F/I	33-2530	
924	2.0L L4 F/I		HP-2005
924	2.0L L4 F/I - exc. Turbo	33-2003	HP-2005
924	2.0L L4 F/I - Turbo	33-2570 ♦	HP-2005
924 Carrera GT	2.0L L4 F/I	33-2570	
928	4.4L V8 F/I	33-2591	
928	4.5L V8 F/I	33-2591	
928	4.6L V8 F/I	33-2591	
1980 PORSCHE			
928	4.5L V8 F/I	33-2591	
928	4.6L V8 F/I	33-2591	
930	3.0L F6 F/I - Turbo	33-2530	
1979 PORSCHE			
911	3.0L H6 F/I		HP-4004
911	3.0L H6 F/I - Non-US, 180BHP	33-2530	HP-4004
911	3.0L H6 F/I - Non-US, Exc., 180BHP	33-2004	HP-4004
911	3.0L H6 F/I - US	33-2004	HP-4004
924	2.0L L4 F/I		HP-2005
924	2.0L L4 F/I - Non-US, exc. Turbo	33-2003 ♦	HP-2005
924	2.0L L4 F/I - Non-US, Turbo	33-2570 ♦	HP-2005
924	2.0L L4 F/I - US	33-2003	HP-2005
928	4.4L V8 F/I	33-2591	
928	4.5L V8 F/I	33-2591	
928	4.6L V8 F/I	33-2591	
1978 PORSCHE			
911	3.0L H6 F/I		HP-4004
911	3.0L H6 F/I - Non-US, 180BHP	33-2530	HP-4004
911	3.0L H6 F/I - Non-US, Exc., 180BHP	33-2004	HP-4004
911	3.0L H6 F/I - US	33-2004	HP-4004
928	4.4L V8 F/I	33-2591	
928	4.5L V8 F/I	33-2591	
1977 PORSCHE			
911	2.7L H6 F/I	33-2004	HP-4004
911	3.0L H6 F/I - Non-US, Exc., 180BHP	33-2004	
911	3.0L H6 F/I - US	33-2004	
911 Carrera	2.7L H6 F/I	E-2380	
924	2.0L L4 F/I	33-2003	HP-2005
1976 PORSCHE			
911	2.7L H6 F/I	33-2004	HP-4004
911	3.0L H6 F/I	33-2004	HP-4004
911 Carrera	2.7L H6 F/I	E-2380	
912	2.0L H4 F/I	33-2003	HP-2004
914	2.0L H4 F/I	33-2003	HP-2004
930	3.0L F6 F/I - Turbo	33-2530	
1975 PORSCHE			
911	2.7L H6 F/I	33-2004	HP-4004
911	3.0L H6 F/I	33-2004	
911 Carrera	2.7L H6 F/I	E-2380	HP-4004
914	1.8L H4 F/I	33-2003	HP-2004
914	2.0L H4 F/I	33-2003	HP-2004
1974 PORSCHE			
911	2.7L H6 F/I	33-2004	HP-4004
911	3.0L H6 F/I	33-2004	
911 Carrera	2.7L H6 F/I	E-2380	HP-4004
914	1.8L H4 F/I	33-2003	HP-2004
914	2.0L H4 F/I	33-2003	HP-2004
1973 PORSCHE			
911	2.3L H6 CARB	E-2380	
911	2.3L H6 F/I	E-2380	
911	2.4L H6 F/I	E-2380	HP-4004
911 Carrera	2.7L H6 F/I	E-2380	
914	1.7L H4 F/I		HP-2004
914	2.0L H4 F/I	33-2003	HP-2004
914/6	2.0L H6 CARB	E-2380	

*Indicates 2 filters required ♦ - Intake kit available - see page 80 Applications updated daily at knfilters.com

Vehicle	Engine Type	Air Filter	Oil Filter
1972 PORSCHE			
911	2.4L H6 F/I	E-2380	HP-4004
914	1.7L H4 F/I	E-2381	HP-2004
914	2.0L H4 F/I	33-2003	
1971 PORSCHE			
911	2.2L H6 CARB	E-2380	HP-3001
911	2.2L H6 F/I	E-2380	HP-3001
1970 PORSCHE			
911	2.0L H6 CARB	E-2380	
911	2.2L H6 CARB	E-2380	HP-3001
911	2.2L H6 F/I	E-2380	HP-3001
914/6	2.0L H6 CARB	E-2380	
1969 PORSCHE			
911	2.0L H6 F/I	E-2380	HP-3001
911	2.2L H6 CARB	E-2380	
911	2.2L H6 F/I	E-2380	
912	1.6L H4 F/I	E-4490	
1968 PORSCHE			
911	121 H6 CARB	E-2380	HP-3001
911	122 H6 CARB	E-2380	HP-3001
912	1.6L H4 F/I	E-4490	
1967 PORSCHE			
911	122 H6 CARB	E-2380	HP-3001
912	97 H4 CARB	E-4490	
1966 PORSCHE			
911	122 H6 CARB	E-2380	HP-3001
912	97 H4 CARB	E-4490	
1965 PORSCHE			
356C	97 H4 CARB	E-2290	
356SC	97 H4 CARB	E-2290	
912	97 H4 CARB	E-4490	
1964 PORSCHE			
356C	97 H4 CARB	E-2290	
356SC	97 H4 CARB	E-2290	
1963 PORSCHE			
356B	97 H4 CARB	E-2290	
1962 PORSCHE			
356B	1.6L H4 CARB - Exc., Zenith 32/40 DNIX	E-2290	
356B	1.6L H4 CARB - Zenith 32/40 DNIX	E-2291	
1961 PORSCHE			
356A	1.6L H4 CARB - Zenith 32/40 DNIX	E-2291	
356B	97 H4 CARB	E-2290	
1959 PORSCHE			
356A	97 H4 CARB	E-2290	
2013 RAM			
1500	3.6L V6 F/I	33-2247	
1500	4.7L V8 F/I	33-2247	
1500	5.7L V8 F/I	33-2247	HP-2010
2500	5.7L V8 F/I	33-2247	HP-2010
2500	6.7L V8 DSL	E-0787	HP-4003
3500	5.7L V8 F/I	33-2247	HP-2010
3500	6.7L V8 DSL	E-0787	HP-4003
2012 RAM			
1500	3.7L V6 F/I	33-2247	HP-2011
1500	4.7L V8 F/I	33-2247 ♦	HP-2010
1500	5.7L V8 F/I	33-2247 ♦	HP-2010
2012 RAM			
2500	5.7L V8 F/I	33-2247	HP-2010
2500	6.7L L6 DSL	E-0787 ♦	HP-4003
3500	5.7L V8 F/I	33-2247	HP-2010
3500	6.7L L6 DSL	E-0787 ♦	HP-4003
4500	6.7L L6 DSL	E-0787	HP-4003
5500	6.7L L6 DSL	E-0787	HP-4003
Cargo Van	3.6L V6 F/I	33-2462	
2011 RAM			
1500	3.7L V6 F/I	33-2247 ♦	HP-2011
1500	4.7L V8 F/I	33-2247 ♦	HP-2010
1500	5.7L V8 F/I	33-2247 ♦	HP-2010
2500	5.7L V8 F/I	33-2247	HP-2010
2500	6.7L L6 DSL	E-0787 ♦	HP-4003
3500	5.7L V8 F/I	33-2247	HP-2010
3500	6.7L L6 DSL	E-0787 ♦	HP-4003
4500	6.7L L6 DSL	E-0787	HP-4003
5500	6.7L L6 DSL	E-0787	HP-4003
Dakota	3.7L V6 F/I	33-2175	HP-2011
Dakota	4.7L V8 F/I	33-2175	HP-2010
2012 RENAULT			
Clio III	1.5L L4 DSL	33-2927 ♦	
Megane III	1.5L L4 DSL	33-2849	
Megane III	2.0L L4 DSL	33-2849	
Megane III	2.0L L4 F/I - exc. auto. trans.	33-2849 ♦	
Twingo	1.2L L4 F/I - exc. Turbo	33-2925	
Twingo	1.2L L4 F/I - Turbo	33-2993	
2011 RENAULT			
Megane III	1.4L L4 F/I	33-2849	
Megane III	2.0L L4 DSL	33-2849	
Megane III	2.0L L4 F/I - exc. auto. trans.	33-2849 ♦	
Twingo	1.2L L4 F/I - 16v	33-2925	
Twingo	1.2L L4 F/I - Turbo	33-2993	
2010 RENAULT			
Koleos	2.5L L4 F/I	33-2944	HP-1008
Megane III	1.4L L4 F/I	33-2849	
Megane III	1.6L L4 F/I	33-2849 ♦	
Megane III	2.0L L4 DSL	33-2849	
Megane III	2.0L L4 F/I - exc. auto. trans.	33-2849 ♦	
2009 RENAULT			
Clio III	1.2L L4 F/I - 101BHP	33-2927 ♦	
Clio III	1.2L L4 F/I - Exc., 101BHP	33-2925 ♦	
Clio III	1.6L L4 F/I	33-2927 ♦	
Laguna III	2.0L L4 DSL	33-2793	
Laguna III	2.0L L4 F/I	33-2793	
Megane II	2.0L L4 DSL	33-2849	
Megane III	1.5L L4 DSL	33-2849	
Megane III	1.9L L4 DSL	33-2849	
Megane III	2.0L L4 DSL	33-2849	
Megane III	2.0L L4 F/I - exc. auto. trans.	33-2849 ♦	
Twingo	1.2L L4 F/I - 16v	33-2925 ♦	
Twingo	1.2L L4 F/I - 8v	E-9238 ♦	
Twingo	1.2L L4 F/I - Turbo	33-2993 ♦	
2008 RENAULT			
Clio	1.6L L4 F/I	33-2927	
Clio III	1.6L L4 F/I	33-2927 ♦	
Laguna III	2.0L L4 DSL	33-2793	
Laguna III	2.0L L4 F/I	33-2793	
Megane II	2.0L L4 DSL	33-2849	

*Indicates 2 filters required ♦ - Intake kit available - see page 80 Applications updated daily at knfilters.com

Vehicle	Engine Type	Air Filter	Oil Filter
2008 RENAULT			
Megane II	2.0L L4 F/I	33-2849 ♦	
Megane III	2.0L L4 F/I - Exc., 180BHP	33-2849	
Scenic II	1.6L L4 F/I	33-2849	
Twingo	1.2L L4 F/I - 16v	33-2925 ♦	
Twingo	1.2L L4 F/I - 8v	E-9238 ♦	
Twingo	1.2L L4 F/I - Turbo	33-2993 ♦	
2007 RENAULT			
Clio III	2.0L L4 F/I	33-2927 ♦	
Twingo	1.2L L4 F/I - 16v	33-2925 ♦	
Twingo	1.2L L4 F/I - 8v	E-9238 ♦	
Twingo	1.2L L4 F/I - Turbo	33-2993 ♦	
2006 RENAULT			
Clio III	1.2L L4 F/I	33-2925 ♦	
Clio III	1.6L L4 F/I	33-2927 ♦	
Twingo	1.2L L4 F/I - 60BHP	33-2925 ♦	
2005 RENAULT			
Clio II	1.2L L4 F/I	33-2860 ♦	
Clio II	1.4L L4 F/I - 16v	33-2194 ♦	
Clio II	1.4L L4 F/I - 8v	33-2673 ♦	
Clio II	1.5L L4 DSL	33-2864 ♦	
Clio II	2.0L L4 F/I	33-2863 ♦	
Clio III	1.4L L4 F/I	33-2927 ♦	
Clio III	1.6L L4 F/I	33-2927 ♦	
Clio III	2.0L L4 F/I	33-2927 ♦	
Grand Scenic	2.0L L4 DSL	33-2849	
Grand Scenic	2.0L L4 F/I	33-2849	
Megane II	1.9L L4 DSL	33-2849	
Megane II	2.0L L4 DSL	33-2849	
Megane II	2.0L L4 F/I	33-2849 ♦	
Modus	1.4L L4 F/I	33-2864	
2004 RENAULT			
Clio	1.6L L4 F/I - 16v	33-2194	
Clio	2.0L L4 F/I	33-2863	
Clio II	1.2L L4 F/I - 16v	33-2860 ♦	
Clio II	1.4L L4 F/I - 16v	33-2194 ♦	
Clio II	1.6L L4 F/I - 16v	33-2194 ♦	
Clio II	1.6L L4 F/I - 8v	33-2673 ♦	
Clio II	2.0L L4 F/I	33-2863 ♦	
Laguna II	3.0L V6 F/I	33-2237	
Megane II	1.6L L4 F/I	33-2849 ♦	
2003 RENAULT			
Clio II	1.4L L4 F/I - 16v	33-2194 ♦	
Clio II	1.4L L4 F/I - 8v	33-2673 ♦	
Clio II	2.0L L4 F/I	33-2863 ♦	
Megane II	1.6L L4 F/I	33-2849 ♦	
Megane II	2.0L L4 F/I	33-2849 ♦	
2002 RENAULT			
Clio	1.6L L4 F/I - 16v	33-2194	
Clio II	1.6L L4 F/I - 16v	33-2194 ♦	
Clio II	2.0L L4 F/I	33-2863 ♦	
2001 RENAULT			
Clio II	1.6L L4 F/I - 16v	33-2194 ♦	
Clio II	1.6L L4 F/I - 8v	33-2673 ♦	
Clio II	2.0L L4 F/I - w/Round Filter, to 4/01	E-9131 ♦	
2000 RENAULT			
Clio II	1.4L L4 F/I - 16v	33-2194 ♦	
Clio II	1.6L L4 F/I - 16v	33-2194 ♦	
Megane I	1.9L L4 DSL - 64BHP	E-9130	
2000 RENAULT			
Megane I	1.9L L4 DSL - 90/98BHP	E-9235	
Twingo	1.2L L4 F/I	E-9238 ♦	
1999 RENAULT			
Clio II	1.6L L4 F/I - 16v	33-2194 ♦	
Laguna I	1.6L L4 F/I	33-2194 ♦	
Twingo	1.2L L4 F/I	E-9238 ♦	
1998 RENAULT			
Twingo	1.2L L4 F/I	E-9238 ♦	
1997 RENAULT			
Megane I	1.9L L4 DSL - 64BHP	E-9130	
Megane I	1.9L L4 DSL - 90/98BHP	E-9235	
Twingo	1.2L L4 F/I	E-9238 ♦	
1996 RENAULT			
Clio I	1.8L L4 F/I - 62mm high	E-9136 ♦	
Laguna I	2.0L L4 F/I - Exc., 109BHP	33-2743	
1995 RENAULT			
R5	1.4L L4 F/I - 229mm high	E-2231	
Twingo	1.2L L4 F/I	33-2699 ♦	
1992 RENAULT			
R21	1.4L L4 F/I	E-9136	
1985 RENAULT			
Fuego	2.1L L4 DSL	E-9099	
R9	1.7L L4 F/I - 80BHP	E-9136	
R9	1.7L L4 F/I - 94BHP	E-9131	
1978 RENAULT			
R30	2.7L V6 F/I	33-2726	
2005 ROVER			
75	1.8L L4 F/I	33-2890	
1999 ROVER			
MGF	1.8L L4 F/I - VVC, K Series	33-2132 ♦	
Mini	1.3L L4 F/I	E-9172 ♦	
1997 ROVER			
Mini	1.3L L4 F/I	E-9172 ♦	
1996 ROVER			
214	1.4L L4 F/I - 16v, SPi, VIN 605481	E-9102 ♦	
Mini	1.3L L4 F/I	E-9172 ♦	
1995 ROVER			
Mini	1.3L L4 F/I	E-9172 ♦	
1994 ROVER			
Mini	1.3L L4 F/I	E-9172 ♦	
1993 ROVER			
Mini	1.3L L4 F/I	E-9172 ♦	
1992 ROVER			
Mini	1.3L L4 CARB	E-2601	
Mini	1.3L L4 F/I	E-9172 ♦	
Mini	1275 L4 CARB - exc. Cooper	E-2601	
1991 ROVER			
Mini	1275 L4 CARB - exc. Cooper	E-2601	

*Indicates 2 filters required ♦ - Intake kit available - see page 80 Applications updated daily at knfilters.com

Vehicle	Engine Type	Air Filter	Oil Filter
1990 ROVER			
Mini	1275 L4 CARB - exc. Cooper	E-2601	
1961 ROVER			
Mini	848 L4 CARB - single carb.	E-9001	
1960 ROVER			
Mini	848 L4 CARB - single carb.	E-9001	
2011 ROYAL ENFIELD			
Bullet 500 B5 F/I	499	RO-5010	
Bullet C5 F/I	499	RO-5010	
Bullet G5 F/I	499	RO-5010	
2010 ROYAL ENFIELD			
Bullet C5 F/I	499	RO-5010	
Bullet G5 F/I	499	RO-5010	
2009 ROYAL ENFIELD			
Bullet C5 EFI	499	RO-5010	
Bullet G5 EFI	499	RO-5010	
2011 SAAB			
9-3	1.9L L4 DSL	33-2337	
9-3	2.0L L4 F/I	33-2337	HP-7000
9-3X	2.0L L4 F/I		HP-7000
9-5	1.6L L4 F/I	33-2962	
9-5	2.0L L4 DSL	33-2962	
9-5	2.0L L4 F/I	33-2962	
2010 SAAB			
9-3	2.0L L4 F/I	33-2337	HP-7000
9-3X	2.0L L4 F/I	33-2337	HP-7000
9-5	2.0L L4 DSL	33-2962	
9-5	2.0L L4 F/I	33-2962	
9-5	2.8L V6 F/I	33-2962	
2009 SAAB			
9-3	2.0L L4 F/I	33-2337	HP-7000
9-5	2.3L L4 F/I	E-2455	HP-1002
9-7x	4.2L L6 F/I	E-1009	HP-2006
9-7x	5.3L V8 F/I	E-1009	HP-1017
9-7x	6.0L V8 F/I	E-1009	HP-1017
2008 SAAB			
9-3	2.0L L4 F/I	33-2337	HP-7000
9-5	2.3L L4 F/I	E-2455	HP-1002
9-7x	4.2L L6 F/I	E-1009	HP-2006
9-7x	5.3L V8 F/I	E-1009	HP-1017
9-7x	6.0L V8 F/I	E-1009	HP-1017
2007 SAAB			
9-3	1.8L L4 F/I	33-2337	
9-3	2.0L L4 F/I	33-2337	HP-7000
9-5	2.3L L4 F/I	E-2455	HP-1002
9-7x	4.2L L6 F/I	E-1009	HP-2006
9-7x	5.3L V8 F/I	E-1009	HP-1017
2006 SAAB			
9-2X	2.0L H4 F/I	33-2336	HP-1008
9-2X	2.5L H4 F/I	33-2336	HP-1008
9-3	1.8L L4 F/I	33-2337	
9-3	1.8L L4 F/I - Turbo	33-2337	HP-7000
9-3	1.9L L4 DSL	33-2337	
9-3	2.0L L4 F/I	33-2337	HP-7000
9-5	2.3L L4 F/I	E-2455	HP-1002
9-7x	4.2L L6 F/I	E-1009	HP-2006
9-7x	5.3L V8 F/I	E-1009	HP-1007
2005 SAAB			
9-2X	2.0L H4 F/I	33-2336	HP-1008
9-2X	2.5L H4 F/I	33-2336	HP-1008
9-3	1.8L L4 F/I	33-2337	
9-3	1.8L L4 F/I - Turbo	33-2337	HP-7000
9-3	1.9L L4 DSL	33-2337	
9-3	2.0L L4 F/I	33-2337	HP-7000
9-5	2.3L L4 F/I	E-2455	HP-1002
9-7x	4.2L L6 F/I	E-1009	HP-2006
9-7x	5.3L V8 F/I	E-1009	HP-1007
2004 SAAB			
9-3	1.8L L4 F/I	33-2337	
9-3	1.8L L4 F/I - Turbo	33-2337	HP-7000
9-3	1.9L L4 DSL	33-2337	
9-3	2.0L L4 F/I	33-2337	HP-7000
9-3	2.2L L4 DSL	33-2337	
9-5	2.0L L4 F/I	E-2455 ♦	
9-5	2.3L L4 F/I	E-2455	HP-1002
2003 SAAB			
9-3	1.8L L4 F/I	33-2337	
9-3	1.8L L4 F/I - Turbo	33-2337	HP-7000
9-3	2.0L L4 F/I - Non-US	33-2337	
9-3	2.0L L4 F/I - Non-US, Convertible		HP-1002
9-3	2.0L L4 F/I - Non-US, Sedan		HP-7000
9-3	2.0L L4 F/I - US, Convertible	33-2165	HP-1002
9-3	2.0L L4 F/I - US, Sedan	33-2337	HP-7000
9-3	2.2L L4 DSL	33-2337	
9-5	2.0L L4 F/I	E-2455 ♦	
9-5	2.3L L4 F/I	E-2455	HP-1002
9-5	3.0L V6 F/I	E-2455	HP-1002
2002 SAAB			
9-3	2.0L L4 F/I - Non-US		HP-7000
9-3	2.0L L4 F/I - Non-US, from 8/02	33-2337 ♦	
9-3	2.0L L4 F/I - Non-US, OEM 4236030, to 7/02	33-2166 ♦	
9-3	2.0L L4 F/I - Non-US, OEM 4876074, to 7/02	33-2165 ♦	
9-3	2.0L L4 F/I - US	33-2165	HP-1002
9-3	2.3L L4 F/I	33-2165	HP-1002
9-5	2.0L L4 F/I	E-2455 ♦	
9-5	2.3L L4 F/I	E-2455	HP-1002
9-5	3.0L V6 F/I	E-2455	HP-1002
2001 SAAB			
9-3	2.0L L4 F/I		HP-1002
9-3	2.0L L4 F/I - OEM 4236030	33-2166 ♦	HP-1002
9-3	2.0L L4 F/I - OEM 4876074	33-2165 ♦	HP-1002
9-3	2.0L L4 F/I - US	33-2165	HP-1002
9-3	2.2L L4 DSL	33-2858	
9-3	2.3L L4 F/I	33-2165	HP-1002
9-5	2.0L L4 F/I	E-2455 ♦	
9-5	2.3L L4 F/I	E-2455	HP-1002
9-5	3.0L V6 F/I	E-2455	HP-1002
2000 SAAB			
9-3	2.0L L4 F/I		HP-1002
9-3	2.0L L4 F/I - OEM 4236030	33-2166 ♦	HP-1002
9-3	2.0L L4 F/I - OEM 4876074	33-2165 ♦	HP-1002
9-3	2.2L L4 DSL	33-2858	
9-3	2.3L L4 F/I	33-2165	HP-1002

*Indicates 2 filters required ♦ - Intake kit available - see page 80 Applications updated daily at knfilters.com

AIR & OIL FILTERS

Vehicle	Engine Type	Air Filter	Oil Filter
2000 SAAB			
9-5	2.0L L4 F/I	E-2455	
9-5	2.3L L4 F/I	E-2455	HP-1002
9-5	3.0L V6 F/I	E-2455	HP-1002
1999 SAAB			
9-3	2.0L L4 F/I		HP-1002
9-3	2.0L L4 F/I - OEM 4236030	33-2166 ♦	HP-1002
9-3	2.0L L4 F/I - OEM 4876074	33-2165 ♦	HP-1002
9-3	2.2L L4 DSL	33-2858	
9-3	2.3L L4 F/I		HP-1002
9-3	2.3L L4 F/I - OEM 4236030	33-2166	HP-1002
9-3	2.3L L4 F/I - OEM 4876074	33-2165	HP-1002
9-5	2.0L L4 F/I	E-2455	
9-5	2.3L L4 F/I	E-2455	HP-1002
9-5	3.0L V6 F/I	E-2455	HP-1002
1998 SAAB			
9-3	2.0L L4 F/I - OEM 4236030	33-2166 ♦	
9-3	2.0L L4 F/I - OEM 4876074	33-2165 ♦	
900	2.0L L4 F/I	33-2663	HP-1002
900	2.3L L4 F/I		HP-1002
900 II	2.0L L4 F/I	33-2663	HP-1002
900 II	2.3L L4 F/I	33-2663	HP-1002
9000	2.0L L4 F/I - w/Panel Filter	33-2020	
9000	2.0L L4 F/I - w/Round Filter	E-9060	
9000	2.3L L4 F/I	E-9060	HP-1002
1997 SAAB			
900	2.0L L4 F/I	33-2166	HP-1002
900	2.3L L4 F/I	33-2166	HP-1002
900 II	2.0L L4 F/I	33-2663	HP-1002
900 II	2.3L L4 F/I	33-2663	HP-1002
900 II	2.5L V6 F/I	33-2166	HP-1001
9000	2.0L L4 F/I - w/Panel Filter	33-2020	
9000	2.0L L4 F/I - w/Round Filter	E-9060	
9000	2.3L L4 F/I	E-9060	HP-1002
1996 SAAB			
900	2.0L L4 F/I	33-2166	HP-1002
900	2.3L L4 F/I	33-2166	HP-1002
900	2.5L V6 F/I	33-2166	HP-1001
900 II	2.0L L4 F/I	33-2663	HP-1002
900 II	2.3L L4 F/I	33-2663	HP-1002
900 II	2.5L V6 F/I	33-2166	HP-1001
9000	2.0L L4 F/I - w/Panel Filter	33-2020	
9000	2.0L L4 F/I - w/Round Filter	E-9060	
9000	2.3L L4 F/I	E-9060	HP-1002
1995 SAAB			
900	2.0L L4 F/I	33-2663	HP-1002
900	2.3L L4 F/I	33-2663	HP-1002
900	2.5L V6 F/I	33-2080	HP-1001
900 II	2.0L L4 F/I	33-2663	HP-1002
900 II	2.3L L4 F/I	33-2663	HP-1002
900 II	2.5L V6 F/I	33-2080	HP-1001
9000	2.0L L4 F/I - w/Panel Filter	33-2020	
9000	2.0L L4 F/I - w/Round Filter	E-9060	
9000	2.3L L4 F/I	E-9060	HP-1002
1994 SAAB			
900	2.3L L4 F/I	33-2663	HP-1002
900 II	2.3L L4 F/I	33-2663	HP-1002
9000	2.3L L4 F/I	E-9060	HP-1002
1993 SAAB			
900	2.0L L4 F/I	E-2457	HP-1002
900	2.1L L4 F/I	E-9140	HP-1002
900 I	2.0L L4 F/I - 16v	E-2457 ♦	
900 I	2.0L L4 F/I - 8v	E-2450 ♦	
900 I	2.1L L4 F/I	E-9140	HP-1002
900 II	2.0L L4 F/I	33-2663	HP-1002
900 II	2.5L V6 F/I	33-2080	HP-1001
9000	2.0L L4 F/I - w/Panel Filter	33-2020	
9000	2.0L L4 F/I - w/Round Filter	E-9060	
9000	2.3L L4 F/I	E-9060	HP-1002
1992 SAAB			
900	2.0L L4 F/I	E-2457	HP-1002
900	2.1L L4 F/I	E-9140	HP-1002
900 I	2.0L L4 F/I - 16v	E-2457 ♦	
900 I	2.0L L4 F/I - 8v	E-2450 ♦	
900 I	2.1L L4 F/I	E-9140	HP-1002
9000	2.0L L4 F/I - w/Panel Filter	33-2020	
9000	2.0L L4 F/I - w/Round Filter	E-9060	
9000	2.3L L4 F/I	E-9060	HP-1002
1991 SAAB			
900	2.0L L4 F/I	E-2457	HP-1002
900	2.1L L4 F/I	E-9140	HP-1002
900 I	2.0L L4 F/I - 16v	E-2457 ♦	
900 I	2.0L L4 F/I - 8v	E-2450 ♦	
900 I	2.1L L4 F/I	E-9140	HP-1002
9000	2.0L L4 F/I - w/Panel Filter	33-2020	
9000	2.0L L4 F/I - w/Round Filter	E-9060	
9000	2.3L L4 F/I		HP-1002
9000	2.3L L4 F/I - Non-US	E-9060	HP-1002
9000	2.3L L4 F/I - US, exc. Turbo	E-9060	HP-1002
9000	2.3L L4 F/I - US, Turbo	33-2020	HP-1002
1990 SAAB			
900	2.0L L4 F/I	E-2457	HP-1002
900 I	2.0L L4 F/I - 16v	E-2457 ♦	
900 I	2.0L L4 F/I - 8v	E-2450 ♦	
9000	2.0L L4 F/I	E-9060	HP-1002
9000	2.0L L4 F/I - Non-US, w/Panel Filter	33-2020	HP-1002
9000	2.0L L4 F/I - Non-US, w/Round Filter	E-9060	HP-1002
1989 SAAB			
900	2.0L L4 F/I		HP-1002
900	2.0L L4 F/I - DOHC	E-2457	HP-1002
900	2.0L L4 F/I - SOHC	E-2450	HP-1002
900 I	2.0L L4 F/I		HP-1002
900 I	2.0L L4 F/I - 16v	E-2457 ♦	HP-1002
900 I	2.0L L4 F/I - 8v	E-2450 ♦	HP-1002
900 I	2.1L L4 F/I	E-9140	HP-1002
9000	2.0L L4 F/I		HP-1002
9000	2.0L L4 F/I - Non-US, w/Panel Filter	33-2020	HP-1002
9000	2.0L L4 F/I - Non-US, w/Round Filter	E-9060	HP-1002
9000	2.0L L4 F/I - US	E-9060	HP-1002

*Indicates 2 filters required ♦ - Intake kit available - see page 80 Applications updated daily at knfilters.com

Partial Listing - Complete List of Vehicles and Applications at knfilters.com

Vehicle	Engine Type	Air Filter	Oil Filter
1988 SAAB			
900	2.0L L4 F/I		HP-1002
900	2.0L L4 F/I - exc. Turbo	E-2450	HP-1002
900	2.0L L4 F/I - Turbo	E-2457	HP-1002
900 I	2.0L L4 F/I		HP-1002
900 I	2.0L L4 F/I - 16v	E-2457 ♦	HP-1002
900 I	2.0L L4 F/I - 8v	E-2450 ♦	HP-1002
9000	2.0L L4 F/I		HP-1002
9000	2.0L L4 F/I - Non-US, w/Panel Filter	33-2020	HP-1002
9000	2.0L L4 F/I - Non-US, w/Round Filter	E-9060	HP-1002
9000	2.0L L4 F/I - US, exc. Turbo	33-2020	HP-1002
9000	2.0L L4 F/I - US, Turbo	E-9060	HP-1002
1987 SAAB			
900	2.0L L4 F/I		HP-1002
900	2.0L L4 F/I - DOHC	E-2457	HP-1002
900	2.0L L4 F/I - SOHC	E-2450	HP-1002
900 I	2.0L L4 F/I		HP-1002
900 I	2.0L L4 F/I - 16v	E-2457	HP-1002
900 I	2.0L L4 F/I - 8v	E-2450	HP-1002
9000	2.0L L4 F/I		HP-1002
9000	2.0L L4 F/I - Non-US, w/Panel Filter	33-2020	HP-1002
9000	2.0L L4 F/I - Non-US, w/Round Filter	E-9060	HP-1002
9000	2.0L L4 F/I - US, exc. Turbo	33-2020	HP-1002
9000	2.0L L4 F/I - US, Turbo	E-9060	HP-1002
1986 SAAB			
900	2.0L L4 F/I		HP-1002
900	2.0L L4 F/I - exc. Turbo	E-2450	HP-1002
900	2.0L L4 F/I - Turbo	E-2457	HP-1002
900 I	2.0L L4 F/I		HP-1002
900 I	2.0L L4 F/I - 16v	E-2457	HP-1002
900 I	2.0L L4 F/I - 8v	E-2450	HP-1002
9000	2.0L L4 F/I		HP-1002
9000	2.0L L4 F/I - Non-US, w/Panel Filter	33-2020	HP-1002
9000	2.0L L4 F/I - Non-US, w/Round Filter	E-9060	HP-1002
9000	2.0L L4 F/I - US	33-2020	HP-1002
1984 SAAB			
900	2.0L L4 F/I	E-2450	HP-1002
900 I	2.0L L4 F/I		HP-1002
900 I	2.0L L4 F/I - 16v	E-2457	HP-1002
900 I	2.0L L4 F/I - 8v	E-2450	HP-1002
9000	2.0L L4 F/I		HP-1002
9000	2.0L L4 F/I - w/Round Filter	E-9060	HP-1002
1974 SAAB			
99	2.0L L4 F/I	E-2450	
99	2.0L L4 F/I - exc. cart. type	E-2450	HP-1002
1971 SAAB			
96	104 V4 CARB		HP-1002
2010 SATURN			
Outlook	3.6L V6 F/I		HP-1017
Vue	3.6L V6 F/I		HP-1017
2009 SATURN			
Aura	2.4L L4 F/I	33-2249	HP-7000
Aura	3.6L V6 F/I	33-2249	HP-1017
Outlook	3.6L V6 F/I	33-2394	HP-1017
Sky	2.0L L4 F/I	33-2369	HP-7000
Sky	2.4L L4 F/I	33-2349 ♦	HP-7000
2009 SATURN			
Vue	2.4L L4 F/I	33-2404	HP-7000
Vue	3.5L V6 F/I	33-2404	HP-2006
Vue	3.6L V6 F/I	33-2404	HP-1017
Vue Hybrid	2.4L L4 F/I	33-2404	HP-7000
2008 SATURN			
Astra	1.8L L4 F/I	33-2787 ♦	
Aura	2.4L L4 F/I	33-2249	HP-7000
Aura	3.5L V6 F/I	33-2249	HP-2006
Aura	3.6L V6 F/I	33-2249	HP-1017
Outlook	3.6L V6 F/I	33-2394	HP-1017
Sky	2.0L L4 F/I	33-2369 ♦	HP-7000
Sky	2.4L L4 F/I	33-2349 ♦	HP-7000
Vue	2.4L L4 F/I	33-2404	HP-7000
Vue	3.5L V6 F/I	33-2404	HP-2006
Vue	3.6L V6 F/I	33-2404	HP-1017
2007 SATURN			
Aura	3.5L V6 F/I	33-2249	HP-2006
Aura	3.6L V6 F/I	33-2249	HP-1017
Ion	2.0L L4 F/I	E-0774	HP-7000
Ion-2	2.2L L4 F/I	33-2358	HP-7000
Ion-3	2.2L L4 F/I	33-2358	HP-7000
Ion-3	2.4L L4 F/I	33-2358	HP-7000
Outlook	3.6L V6 F/I	33-2394	HP-1017
Relay-3	3.9L V6 F/I	33-2318	HP-2006
Sky	2.0L L4 F/I	33-2369	HP-7000
Sky	2.4L L4 F/I	33-2349 ♦	HP-7000
Vue	2.2L L4 F/I	33-2249	HP-7000
Vue	2.4L L4 F/I	33-2249	HP-7000
Vue	3.5L V6 F/I	33-2249 ♦	HP-1010
2006 SATURN			
Ion	2.0L L4 F/I	E-0774 ♦	HP-7000
Ion-2	2.2L L4 F/I	33-2358	HP-7000
Ion-3	2.2L L4 F/I	33-2358	HP-7000
Ion-3	2.4L L4 F/I	33-2358	HP-7000
Relay-2	3.5L V6 F/I	33-2318	HP-1001
Vue	2.2L L4 F/I	33-2249	HP-7000
Vue	3.5L V6 F/I	33-2249 ♦	HP-1010
2005 SATURN			
Ion	2.0L L4 F/I	E-0774 ♦	HP-7000
Ion-1	2.2L L4 F/I	33-2275	HP-7000
Ion-2	2.2L L4 F/I	33-2275	HP-7000
Ion-3	2.2L L4 F/I	33-2275	HP-7000
Relay-2	3.5L V6 F/I	33-2318	HP-1001
Relay-3	3.5L V6 F/I		HP-1001
Vue	2.2L L4 F/I	33-2249	HP-7000
Vue	3.5L V6 F/I	33-2249 ♦	HP-1010
2004 SATURN			
Ion	2.0L L4 F/I	E-0774 ♦	HP-7000
Ion-1	2.2L L4 F/I	33-2275	HP-7000
Ion-2	2.2L L4 F/I	33-2275	HP-7000
Ion-3	2.2L L4 F/I	33-2275	HP-7000
L300-1	2.2L L4 F/I	33-2160	HP-7000
Vue	2.2L L4 F/I	33-2249	HP-7000
Vue	3.5L V6 F/I	33-2249 ♦	HP-1010
2003 SATURN			
Ion-1	2.2L L4 F/I	33-2275	HP-7000
Ion-2	2.2L L4 F/I	33-2275	HP-7000
Ion-3	2.2L L4 F/I	33-2275	HP-7000
L200	2.2L L4 F/I	33-2160	HP-7000
LW200	2.2L L4 F/I	33-2160	HP-7000
Vue	2.2L L4 F/I	33-2249	HP-7000

*Indicates 2 filters required ♦ - Intake kit available - see page 80 Applications updated daily at knfilters.com

Vehicle	Engine Type	Air Filter	Oil Filter
2002 SATURN			
L100	2.2L L4 F/I	33-2160	HP-7000
L200	2.2L L4 F/I	33-2160	HP-7000
LS2	3.0L V6 F/I	33-2160	
LW200	2.2L L4 F/I	33-2160	HP-7000
SC1	1.9L L4 F/I	33-2055	HP-1002
SC2	1.9L L4 F/I	33-2055	HP-1002
SL	1.9L L4 F/I	33-2055	HP-1002
SL1	1.9L L4 F/I	33-2055	HP-1002
SL2	1.9L L4 F/I	33-2055	HP-1002
Vue	2.2L L4 F/I	33-2249	HP-7000
2001 SATURN			
L100	2.2L L4 F/I	33-2160	HP-7000
L200	2.2L L4 F/I	33-2160	HP-7000
LS2	3.0L V6 F/I	33-2160	
LW200	2.2L L4 F/I	33-2160	HP-7000
SC1	1.9L L4 F/I	33-2055	HP-1002
SC2	1.9L L4 F/I	33-2055	HP-1002
SL	1.9L L4 F/I	33-2055	HP-1002
SL1	1.9L L4 F/I	33-2055	HP-1002
SL2	1.9L L4 F/I	33-2055	HP-1002
SW1	1.9L L4 F/I	33-2055	HP-1002
SW2	1.9L L4 F/I	33-2055	HP-1002
2000 SATURN			
LS	2.2L L4 F/I	33-2160	HP-7000
LS1	2.2L L4 F/I	33-2160	HP-7000
LW1	2.2L L4 F/I	33-2160	HP-7000
SC1	1.9L L4 F/I	33-2055	HP-1002
SC2	1.9L L4 F/I	33-2055	HP-1002
SL	1.9L L4 F/I	33-2055	HP-1002
SL1	1.9L L4 F/I	33-2055	HP-1002
SL2	1.9L L4 F/I	33-2055	HP-1002
SW1	1.9L L4 F/I	33-2055	HP-1002
SW2	1.9L L4 F/I	33-2055	HP-1002
1999 SATURN			
SC1	1.9L L4 F/I	33-2055	HP-1002
SC2	1.9L L4 F/I	33-2055	HP-1002
SL	1.9L L4 F/I	33-2055	HP-1002
SL1	1.9L L4 F/I	33-2055	HP-1002
SL2	1.9L L4 F/I	33-2055	HP-1002
SW1	1.9L L4 F/I	33-2055	HP-1002
SW2	1.9L L4 F/I	33-2055	HP-1002
1998 SATURN			
SC1	1.9L L4 F/I	33-2055	HP-1002
SC2	1.9L L4 F/I	33-2055	HP-1002
SL	1.9L L4 F/I	33-2055	HP-1002
SL1	1.9L L4 F/I	33-2055	HP-1002
SL2	1.9L L4 F/I	33-2055	HP-1002
SW2	1.9L L4 F/I	33-2055	HP-1002
1997 SATURN			
SC1	1.9L L4 F/I	33-2055	HP-1002
SC2	1.9L L4 F/I	33-2055	HP-1002
SL	1.9L L4 F/I	33-2055	HP-1002
SL1	1.9L L4 F/I	33-2055	HP-1002
SL2	1.9L L4 F/I	33-2055	HP-1002
SW1	1.9L L4 F/I	33-2055	HP-1002
SW2	1.9L L4 F/I	33-2055	HP-1002
1996 SATURN			
SC1	1.9L L4 F/I	33-2055	HP-1002
SC2	1.9L L4 F/I	33-2055 ♦	HP-1002
SL	1.9L L4 F/I	33-2055	HP-1002
SL1	1.9L L4 F/I	33-2055	HP-1002
1996 SATURN			
SL2	1.9L L4 F/I	33-2055 ♦	HP-1002
SW2	1.9L L4 F/I	33-2055 ♦	HP-1002
1995 SATURN			
SC1	1.9L L4 F/I	33-2055	HP-1002
SC2	1.9L L4 F/I	33-2055 ♦	HP-1002
SL	1.9L L4 F/I	33-2055	HP-1002
SL1	1.9L L4 F/I	33-2055	HP-1002
SL2	1.9L L4 F/I	33-2055 ♦	HP-1002
SW2	1.9L L4 F/I	33-2055 ♦	HP-1002
1994 SATURN			
SC1	1.9L L4 F/I	33-2113	HP-1002
SC2	1.9L L4 F/I	33-2055 ♦	HP-1002
SL	1.9L L4 F/I		HP-1002
SL1	1.9L L4 F/I	33-2113	HP-1002
SL2	1.9L L4 F/I	33-2055 ♦	HP-1002
1993 SATURN			
SC1	1.9L L4 F/I	33-2113	HP-1002
SC2	1.9L L4 F/I	33-2055 ♦	HP-1002
SL1	1.9L L4 F/I	33-2113	HP-1002
SL2	1.9L L4 F/I	33-2055 ♦	HP-1002
SW2	1.9L L4 F/I	33-2055 ♦	HP-1002
1992 SATURN			
SC	1.9L L4 F/I		HP-1002
SC	1.9L L4 F/I - DOHC	33-2055 ♦	HP-1002
SC	1.9L L4 F/I - SOHC	33-2113 ♦	HP-1002
SL	1.9L L4 F/I		HP-1002
SL1	1.9L L4 F/I	33-2113	HP-1002
SL2	1.9L L4 F/I	33-2055 ♦	HP-1002
1991 SATURN			
SL	1.9L L4 F/I	33-2113	HP-1002
SL1	1.9L L4 F/I	33-2113	HP-1002
SL2	1.9L L4 F/I	33-2055 ♦	HP-1002
2013 SCION			
FR-S	2.0L H4 F/I	33-2300	HP-1004
tC	2.5L L4 F/I	33-2326 ♦	HP-7020
xB	2.4L L4 F/I		HP-1003
xD	1.8L L4 F/I	33-2360	
2012 SCION			
tC	2.5L L4 F/I	33-2326 ♦	HP-7020
xB	2.4L L4 F/I	33-2326 ♦	HP-1003
xD	1.8L L4 F/I	33-2360	HP-7021
2011 SCION			
tC	2.5L L4 F/I	33-2326 ♦	HP-7020
xB	2.4L L4 F/I	33-2326 ♦	HP-1003
xD	1.8L L4 F/I	33-2360 ♦	HP-7021
2010 SCION			
tC	2.4L L4 F/I	33-2252 ♦	HP-1003
xB	2.4L L4 F/I	33-2326 ♦	HP-1003
xD	1.8L L4 F/I	33-2360 ♦	HP-7021
2009 SCION			
tC	2.4L L4 F/I	33-2252 ♦	HP-1003
xB	2.4L L4 F/I	33-2326 ♦	HP-1003
xD	1.8L L4 F/I	33-2360 ♦	HP-7021
2008 SCION			
tC	2.4L L4 F/I	33-2252 ♦	HP-1003
xB	2.4L L4 F/I	33-2326 ♦	HP-1003
xD	1.8L L4 F/I	33-2360 ♦	HP-7021

*Indicates 2 filters required ♦ - Intake kit available - see page 80 Applications updated daily at knfilters.com

Vehicle	Engine Type	Air Filter	Oil Filter
2007 SCION			
tC	2.4L L4 F/I	33-2252 ♦	HP-1003
xA	1.5L L4 F/I	33-2211 ♦	HP-1003
xB	1.5L L4 F/I	33-2211 ♦	HP-1003
2006 SCION			
tC	2.4L L4 F/I	33-2300 ♦	HP-1003
xA	1.5L L4 F/I	33-2211 ♦	HP-1003
xB	1.5L L4 F/I	33-2211 ♦	HP-1003
2005 SCION			
tC	2.4L L4 F/I	33-2300 ♦	HP-1003
xA	1.5L L4 F/I	33-2211 ♦	HP-1003
xB	1.5L L4 F/I	33-2211 ♦	HP-1003
2004 SCION			
xA	1.5L L4 F/I	33-2211 ♦	HP-1003
xB	1.5L L4 F/I	33-2211 ♦	HP-1003
2003 SCION			
xA	1.5L L4 F/I	33-2211 ♦	
xB	1.5L L4 F/I	33-2211 ♦	
2009 SEA DOO			
150 Speedster 155HP	1494		KN-556
150 Speedster 215HP	1494		KN-556
150 Speedster 255HP	1494		KN-556
180 Challenger 215HP	1494		KN-556
180 Challenger SE 215HP	1494		KN-556
180 Challenger SE 255HP	1494		KN-556
200 Speedster 430HP	1494		KN-556*
205 Utopia SE 430HP	1494		KN-556*
GTI 130	1494		KN-556
GTI SE 130	1494		KN-556
GTI SE 155	1494		KN-556
GTX 155	1494		KN-556
GTX 215	1494		KN-556
GTX Limited iS 255	1494		KN-556
RXP 215	1494		KN-556
RXP-X 255	1494		KN-556
RXT 215	1494		KN-556
RXT-X 255	1494		KN-556
2008 SEA DOO			
150 Speedster	1494		KN-556
180 Challenger SE	1494		KN-556
200 Speedster	1494		KN-556
205 Utopia SE	1494		KN-556
230 Challenger	1494		KN-556
230 Challenger SE	1494		KN-556
230 Wake	1494		KN-556
230 Wake Eng 2	1494		KN-556
GTI 130	1494		KN-556
GTI SE 130	1494		KN-556
GTI SE 155	1494		KN-556
GTX 155	1494		KN-556
GTX 215	1494		KN-556
GTX Limited	1494		KN-556
RXP 215	1494		KN-556
RXP-X 255	1494		KN-556
RXT 215	1494		KN-556
RXT-X 255	1494		KN-556
Speedster Wake	1494		KN-556
Speedster Wake Eng. 2	1494		KN-556
Wake 155	1494		KN-556
2008 SEA DOO			
Wake 215	1494		KN-556
2007 SEA DOO			
150 Speedster	1494		KN-556
180 Challenger	1494		KN-556
180 Challenger SE	1494		KN-556
200 Speedster	1494		KN-556
205 Utopia SE	1494		KN-556
230 Challenger SE	1494		KN-556
GTI	1494		KN-556
GTI SE 130	1494		KN-556
GTX	1494		KN-556
GTX Limited	1494		KN-556
RXP 155	1494		KN-556
RXT	1494		KN-556
Speedster Wake	1494		KN-556
Speedster Wake Eng. 2	1494		KN-556
Wake 155	1494		KN-556
2006 SEA DOO			
180 Challenger	1494		KN-556
180 Challenger CS	1494		KN-556
200 Speedster	1494		KN-556
205 Utopia SE	1494		KN-556
GTI	1494		KN-556
GTI SE	1494		KN-556
GTX	1494		KN-556
GTX Limited	1494		KN-556
GTX SC	1494		KN-556
Islandia	1494		KN-556
Islandia SE	1494		KN-556
RXP	1494		KN-556
RXT	1494		KN-556
Speedster Wake	1494		KN-556
Speedster Wake Eng. 2	1494		KN-556
Wake	1494		KN-556
2005 SEA DOO			
GTX	1494		KN-556
GTX Limited	1494		KN-556
GTX SC	1494		KN-556
RXP	1494		KN-556
RXT	1494		KN-556
Sportster 4-Tec 155HP	1498		KN-556
Sportster 4-Tec 215HP	1498		KN-556
Sportster SCIC 215HP	1494		KN-556
Wake	1494		KN-556
2004 SEA DOO			
GTX 4-Tec	1484		KN-556
GTX 4-Tec Ltd. Supercharged	1484		KN-556
GTX 4-Tec Supercharged	1484		KN-556
GTX 4-Tec Wakeboard Edition	1484		KN-556
RXP	1484		KN-556
Sportster 4-Tec	1484		KN-556
2003 SEA DOO			
GTX 4-Tec	1484		KN-556
GTX 4-Tec Ltd. Supercharged	1484		KN-556

*Indicates 2 filters required ♦ - Intake kit available - see page 80 Applications updated daily at knfilters.com

Vehicle	Engine Type	Air Filter	Oil Filter
2003 SEA DOO			
GTX 4-Tec Supercharged	1484		KN-556
GTX 4-Tec Wake	1484		KN-556
2002 SEA DOO			
GTX 4-Tec	1484		KN-556
2012 SEAT			
Ibiza V	1.2L L3 DSL	E-2997	
Ibiza V	1.2L L3 F/I - Exc., TSi	33-2830 ♦	
Ibiza V	1.2L L3 F/I - TSi	E-2997 ♦	
Ibiza V	1.6L L4 DSL	E-2997	
Ibiza V	1.6L L4 F/I	33-2920	
Leon	1.4L L4 F/I - 86BHP	33-2920 ♦	
Leon	2.0L L4 DSL	33-2865 ♦	
Leon	2.0L L4 F/I - Cupra R	33-2888 ♦	
Leon	2.0L L4 F/I - Exc. Cupra R	33-2865 ♦	
Mii	1.0L L3 F/I	33-2994	
2011 SEAT			
Ibiza V	1.4L L4 F/I - Exc., TSi	33-2920	
Ibiza V	1.4L L4 F/I - TSi	E-2997	
Ibiza V	1.6L L4 DSL	E-2997	
Ibiza V	1.6L L4 F/I	33-2920	
Leon	1.4L L4 F/I - 86BHP	33-2920 ♦	
Leon	1.6L L4 DSL	33-2865 ♦	
2010 SEAT			
Leon	1.4L L4 F/I - 86BHP	33-2920 ♦	
Leon	1.8L L4 F/I	33-2865 ♦	
2009 SEAT			
Ibiza IV	1.4L L4 F/I - 85BHP	33-2920 ♦	
Ibiza IV	1.6L L4 F/I - 105BHP	33-2920 ♦	
Ibiza V	1.4L L3 DSL	33-2830	
Ibiza V	1.4L L4 F/I - Exc. TSi	33-2920 ♦	
Ibiza V	1.4L L4 F/I - TSi	E-2997 ♦	
Ibiza V	1.9L L4 DSL	33-2830	
Leon	1.4L L4 F/I - 125BHP	E-2014 ♦	
Leon	1.4L L4 F/I - 86BHP	33-2920 ♦	
2008 SEAT			
Ibiza IV	1.6L L4 F/I - 105BHP	33-2920 ♦	
Ibiza V	1.6L L4 F/I	33-2920 ♦	
Ibiza V	2.0L L4 F/I	33-2830	
Leon	1.4L L4 F/I - 86BHP	33-2920 ♦	
Leon	2.0L L4 DSL	33-2865 ♦	
Leon	2.0L L4 F/I - Exc., 150BHP	33-2888 ♦	
2007 SEAT			
Ibiza IV	1.6L L4 F/I - 105BHP	33-2920 ♦	
2006 SEAT			
Cordoba	1.4L L4 DSL	33-2830	
Cordoba	1.4L L4 F/I - 86BHP	33-2920	
Ibiza IV	1.8L L4 F/I	33-2830 ♦	
Ibiza IV	1.9L L4 DSL	33-2830 ♦	
2005 SEAT			
Ibiza	2.0L L4 F/I	33-2830	
Ibiza IV	2.0L L4 F/I	33-2830 ♦	
Leon	1.8L L4 F/I	33-2128 ♦	
2004 SEAT			
Leon	1.6L L4 F/I - 100/102BHP	33-2128 ♦	
Leon	1.6L L4 F/I - 105BHP	33-2221 ♦	
2003 SEAT			
Ibiza IV	1.2L L3 F/I - 6v	33-2830 ♦	
Ibiza IV	2.0L L4 F/I	33-2830 ♦	
Leon	1.8L L4 F/I	33-2128 ♦	
2002 SEAT			
Leon	1.8L L4 F/I	33-2128 ♦	
2000 SEAT			
Ibiza III	1.8L L4 F/I	33-2172 ♦	
1991 SEAT			
Ibiza I	1.2L L4 F/I - 60BHP	E-2585	
Ibiza I	1.5L L4 F/I - 85BHP	E-2585	
Ibiza I	1.7L L4 DSL	33-2631	
2012 SKODA			
Fabia	1.4L L4 F/I - Exc. TSi	33-2920	
Fabia	1.4L L4 F/I - TSi	E-2997	
Octavia	2.0L L4 DSL	33-2865 ♦	
Octavia	2.0L L4 F/I	33-2865 ♦	
2011 SKODA			
Fabia	1.4L L4 F/I - Exc. TSi	33-2920	
Fabia	1.4L L4 F/I - TSi	E-2997	
Fabia	1.6L L4 DSL	E-2997	
Fabia	1.6L L4 F/I	33-2920	
2010 SKODA			
Fabia	1.2L L3 DSL	E-2997	
Fabia	1.2L L4 F/I - Exc., TSi	33-2830 ♦	
Fabia	1.2L L4 F/I - TSi	E-2997 ♦	
2009 SKODA			
Fabia	1.4L L4 DSL	33-2830	
Fabia	1.4L L4 F/I	33-2920 ♦	
Roomster	1.2L L4 F/I	33-2830 ♦	
2008 SKODA			
Fabia	1.2L L3 F/I	33-2830 ♦	
Fabia	1.4L L4 DSL	33-2830	
Fabia	1.4L L4 F/I	33-2920 ♦	
Octavia	1.9L L4 DSL	33-2865 ♦	
2007 SKODA			
Fabia	1.4L L4 DSL	33-2830 ♦	
Fabia	1.4L L4 F/I	33-2920 ♦	
Fabia	1.6L L4 F/I	33-2920 ♦	
2006 SKODA			
Fabia	1.9L L4 DSL	33-2830 ♦	
2005 SKODA			
Fabia	1.2L L3 F/I - 54BHP	33-2830 ♦	
Fabia	1.2L L3 F/I - 64BHP	33-2850 ♦	
Fabia	1.4L L4 DSL	33-2830 ♦	
Fabia	1.4L L4 F/I - 16v	33-2221 ♦	
Fabia	1.4L L4 F/I - 8v	33-2830 ♦	
2004 SKODA			
Octavia	1.8L L4 F/I	33-2128 ♦	
2003 SKODA			
Octavia	1.8L L4 F/I	33-2128 ♦	
2001 SKODA			
Fabia	1.4L L4 F/I - 16v	33-2221 ♦	
Fabia	1.4L L4 F/I - 8v	33-2830 ♦	
2013 SMART			
Fortwo	1.0L L3 F/I	33-2417	HP-1008

*Indicates 2 filters required ♦ - Intake kit available - see page 80 Applications updated daily at knfilters.com

Vehicle	Engine Type	Air Filter	Oil Filter
2012 SMART			
Fortwo	0.8L L3 DSL	33-2417	
Fortwo	1.0L L3 F/I	33-2417	HP-1008
2011 SMART			
Fortwo	0.8L L3 DSL	33-2417	
Fortwo	1.0L L3 F/I	33-2417	HP-1008
2010 SMART			
Fortwo	0.8L L3 DSL	33-2417	
Fortwo	1.0L L3 F/I		HP-1008
Fortwo	1.0L L3 F/I - US	33-2417	HP-1008
2009 SMART			
Fortwo	0.8L L3 DSL	33-2417	
Fortwo	1.0L L3 F/I	33-2417	HP-1008
2008 SMART			
Fortwo	0.8L L3 DSL	33-2417	
Fortwo	1.0L L3 F/I	33-2417	
2006 SMART			
Forfour	1.1L L3 F/I	33-2881	
Fortwo	0.7L L3 F/I	E-9257	
Fortwo	0.8L L3 DSL	E-9257	
Roadster	0.7L L3 F/I	E-9257 ♦	
2005 SMART			
Forfour	1.5L L4 F/I	33-2881	
Fortwo	0.7L L3 F/I	E-9257	
Fortwo	0.8L L3 DSL	E-9257	
2013 SRT			
Viper	8.4L V10 F/I	33-2432	
2008 SSANGYONG			
Rexton	3.2L V6 DSL	33-2834	
2007 SSANGYONG			
Rexton	2.7L L5 DSL	33-2834	
Rexton	2.9L L5 DSL	33-2834	
Rexton	3.2L V6 DSL	33-2834	
2006 SSANGYONG			
Rexton	2.7L L5 DSL	33-2834	
Rexton	2.9L L5 DSL	33-2834	
2005 SSANGYONG			
Rexton	2.7L L5 DSL	33-2834	
Rexton	2.9L L5 DSL	33-2834	
2004 SSANGYONG			
Rexton	2.7L L5 DSL	33-2834	
2000 SSANGYONG			
Korando	2.9L L5 DSL - Turbo	33-2214	
1999 SSANGYONG			
Musso	3.2L V6 F/I	33-2214	
2008 STERLING			
Bullet 45	6.7L L6 DSL		HP-4003
Bullet 55	6.7L L6 DSL		HP-4003
1964 STUDEBAKER			
Avanti	289 V8 CARB		HP-2003
1963 STUDEBAKER			
Avanti	289 V8 CARB		HP-2003
1962 STUDEBAKER			
Hawk	289 V8 CARB - VIN P, exc. opt. cart. filter		HP-2003

Vehicle	Engine Type	Air Filter	Oil Filter
2013 SUBARU			
BRZ	2.0L H4 F/I	33-2300	HP-1004
Forester	2.0L H4 DSL	33-2304	
Forester	2.0L H4 F/I	33-2304	
Forester	2.5L H4 F/I	33-2304	
Forester	2.5L H4 F/I - exc. Turbo	33-2304	HP-1010
Forester	2.5L H4 F/I - Turbo	33-2304	HP-1008
Impreza	2.0L H4 F/I	33-2304	HP-1010
Impreza WRX	2.5L H4 F/I	33-2304 ♦	HP-1008
Impreza WRX STi	2.5L H4 F/I	33-2304	HP-1008
Legacy	2.5L H4 F/I	33-2304	HP-1010
Legacy	3.6L H6 F/I	33-2304	HP-1004
Legacy IV	2.5L H4 F/I	33-2304	
Outback	2.5L H4 F/I	33-2304	HP-1010
Outback	3.6L H6 F/I	33-2304	HP-1004
XV	2.0L H4 DSL	33-2304	
XV	2.0L H4 F/I	33-2304	
XV Crosstrek	2.0L H4 F/I	33-2304	HP-1008
2012 SUBARU			
BRZ	2.0L H4 F/I	33-2300	
Forester	2.0L H4 DSL	33-2304	
Forester	2.0L H4 F/I	33-2304	
Forester	2.5L H4 F/I	33-2304	
Forester	2.5L H4 F/I - exc. Turbo	33-2304	HP-1004
Forester	2.5L H4 F/I - Turbo	33-2304	HP-1008
Impreza	1.5L H4 F/I	33-2304	
Impreza	2.0L H4 DSL	33-2304	
Impreza	2.0L H4 F/I	33-2304	HP-1010
Impreza WRX	2.5L H4 F/I	33-2304 ♦	HP-1008
Impreza WRX STi	2.5L H4 F/I	33-2304 ♦	HP-1008
Legacy	2.5L H4 F/I	33-2304	HP-1008
Legacy	3.6L H6 F/I	33-2304	HP-1004
Legacy IV	2.0L H4 DSL	33-2304	
Legacy IV	2.0L H4 F/I	33-2304	
Legacy IV	2.5L H4 F/I	33-2304	
Outback	2.0L H4 DSL	33-2304	
Outback	2.5L H4 F/I	33-2304	HP-1008
Outback	3.6L H6 F/I	33-2304	HP-1004
Tribeca	3.6L H6 F/I	33-2304	HP-1004
XV	2.0L H4 DSL	33-2304	
XV	2.0L H4 F/I	33-2304	
2011 SUBARU			
Forester	2.0L H4 DSL	33-2304	
Forester	2.0L H4 F/I	33-2304	
Forester	2.5L H4 F/I	33-2304	
Forester	2.5L H4 F/I - exc. Turbo	33-2304	HP-1004
Forester	2.5L H4 F/I - Turbo	33-2304	HP-1008
Impreza	1.5L H4 F/I	33-2304	
Impreza	2.0L H4 DSL	33-2304	
Impreza	2.0L H4 F/I	33-2304	
Impreza WRX	2.5L H4 F/I	33-2304 ♦	HP-1008
Impreza WRX STi	2.5L H4 F/I	33-2304 ♦	HP-1008
Legacy	2.5L H4 F/I	33-2304	HP-1008
Legacy	3.6L H6 F/I	33-2304	HP-1004
Legacy IV	2.0L H4 DSL	33-2304	
Legacy IV	2.0L H4 F/I	33-2304	
Legacy IV	2.5L H4 F/I	33-2304	
Outback	2.0L H4 DSL	33-2304	
Outback	2.5L H4 F/I	33-2304	HP-1008
Outback	3.6L H6 F/I	33-2304	HP-1004
Tribeca	3.0L H6 F/I	33-2304	
Tribeca	3.6L H6 F/I	33-2304	HP-1004

*Indicates 2 filters required ♦ - Intake kit available - see page 80 Applications updated daily at knfilters.com

Vehicle	Engine Type	Air Filter	Oil Filter
2010 SUBARU			
Forester	2.0L H4 DSL	33-2304	
Forester	2.0L H4 F/I	33-2304	
Forester	2.5L H4 F/I	33-2304	HP-1008
Impreza	1.5L H4 F/I	33-2304	
Impreza	2.0L H4 DSL	33-2304	
Impreza	2.0L H4 F/I	33-2304	
Impreza	2.5L H4 F/I	33-2304	HP-1008
Impreza WRX	2.5L H4 F/I	33-2304 ♦	HP-1008
Impreza WRX STi	2.5L H4 F/I	33-2304 ♦	HP-1008
Justy IV	1.0L L3 F/I	33-2131	
Legacy	2.5L H4 F/I	33-2304	HP-1008
Legacy	3.6L H6 F/I	33-2304	HP-1004
Legacy IV	2.0L H4 DSL	33-2304	
Legacy IV	2.0L H4 F/I	33-2304	
Legacy IV	2.5L H4 F/I	33-2304	
Outback	2.0L H4 DSL	33-2304	
Outback	2.5L H4 F/I	33-2304	HP-1008
Outback	3.6L H6 F/I	33-2304	HP-1004
Tribeca	3.0L H6 F/I	33-2304	
Tribeca	3.6L H6 F/I	33-2304	HP-1004
2009 SUBARU			
Forester	2.0L H4 DSL	33-2304	
Forester	2.0L H4 F/I	33-2304	
Forester	2.5L H4 F/I	33-2304	HP-1008
Impreza	1.5L H4 F/I	33-2304	
Impreza	2.0L H4 DSL	33-2304	
Impreza	2.0L H4 F/I	33-2304	
Impreza	2.5L H4 F/I	33-2304 ♦	HP-1008
Impreza WRX	2.0L H4 F/I	33-2304	
Impreza WRX	2.5L H4 F/I	33-2304 ♦	HP-1008
Impreza WRX STi	2.0L H4 F/I	33-2304	
Impreza WRX STi	2.5L H4 F/I	33-2304 ♦	HP-1008
Legacy	2.5L H4 F/I	33-2304	HP-1008
Legacy	3.0L H6 F/I	33-2304	HP-1004
Legacy GT	2.5L H4 F/I	33-2304 ♦	HP-1008
Legacy IV	2.0L H4 DSL	33-2304	
Legacy IV	2.0L H4 F/I	33-2304	
Legacy IV	2.5L H4 F/I		HP-1008
Legacy IV	2.5L H4 F/I - 165BHP	33-2304	HP-1008
Legacy IV	3.0L H6 F/I	33-2304	HP-1004
Outback	2.0L H4 DSL	33-2304	
Outback	2.5L H4 F/I	33-2304	HP-1008
Outback	3.0L H6 F/I	33-2304	HP-1004
Tribeca	3.0L H6 F/I	33-2304	
Tribeca	3.6L H6 F/I	33-2304	HP-1004
2008 SUBARU			
Forester	2.0L H4 DSL	33-2304	
Forester	2.0L H4 F/I - From 4/08	33-2304	
Forester	2.5L H4 F/I	33-2075	HP-1008
Impreza	1.5L H4 F/I	33-2304	
Impreza	2.0L H4 DSL	33-2304	
Impreza	2.0L H4 F/I	33-2304	
Impreza	2.5L H4 F/I	33-2304 ♦	HP-1008
Impreza WRX	2.0L H4 F/I	33-2304	
Impreza WRX	2.5L H4 F/I	33-2304 ♦	HP-1008
Impreza WRX STi	2.0L H4 F/I	33-2304	
Impreza WRX STi	2.5L H4 F/I	33-2304 ♦	HP-1008
Legacy	2.5L H4 F/I	33-2304	HP-1008
Legacy	3.0L H6 F/I	33-2304	HP-1004
Legacy GT	2.5L H4 F/I	33-2304 ♦	HP-1008
Legacy IV	2.0L H4 DSL	33-2304	
Legacy IV	2.0L H4 F/I	33-2304	
Legacy IV	2.5L H4 F/I		HP-1008
Legacy IV	2.5L H4 F/I - 165BHP	33-2304	HP-1008
Legacy IV	3.0L H6 F/I	33-2304	
Outback	2.5L H4 F/I	33-2304	HP-1008
Outback	3.0L H6 F/I	33-2304	HP-1004
Tribeca	3.0L H6 F/I	33-2304	
Tribeca	3.6L H6 F/I	33-2304	HP-1004
2007 SUBARU			
B9 Tribeca	3.0L H6 F/I	33-2304	HP-1004
Forester	2.5L H4 F/I	33-2075	HP-1008
Impreza	1.5L H4 F/I	33-2304	
Impreza	2.0L H4 F/I	33-2304	
Impreza	2.5L H4 F/I	33-2232 ♦	HP-1008
Impreza WRX	2.0L H4 F/I	33-2304 ♦	
Impreza WRX	2.5L H4 F/I	33-2232 ♦	HP-1008
Impreza WRX STi	2.0L H4 F/I	33-2304 ♦	
Impreza WRX STi	2.5L H4 F/I	33-2232 ♦	HP-1008
Legacy	2.5L H4 F/I	33-2304	HP-1008
Legacy GT	2.5L H4 F/I	33-2304 ♦	HP-1008
Legacy IV	2.0L H4 F/I	33-2304	
Legacy IV	2.5L H4 F/I		HP-1008
Legacy IV	2.5L H4 F/I - 165BHP	33-2304	HP-1008
Legacy IV	3.0L H6 F/I	33-2304	
Outback	2.5L H4 F/I	33-2304	HP-1008
Outback	3.0L H6 F/I	33-2304	HP-1004
Tribeca	3.0L H6 F/I	33-2304	
2006 SUBARU			
B9 Tribeca	3.0L H6 F/I	33-2304	HP-1004
Baja	2.5L H4 F/I	33-2075	HP-1008
Baja Sport	2.5L H4 F/I	33-2154	HP-1008
Forester	2.5L H4 F/I	33-2075	HP-1008
		33-2075 ♦	HP-1008
Forester	2.5L H4 F/I - Non-US, Turbo	33-2075	HP-1008
Impreza	2.5L H4 F/I	33-2232	HP-1008
Impreza WRX	2.5L H4 F/I	33-2232 ♦	HP-1008
Impreza WRX STi	2.5L H4 F/I	33-2232 ♦	HP-1008
Legacy	2.5L H4 F/I	33-2304	HP-1008
Legacy GT	2.5L H4 F/I	33-2304 ♦	HP-1008
Legacy IV	2.0L H4 F/I	33-2304	
Legacy IV	2.5L H4 F/I		HP-1008
Legacy IV	2.5L H4 F/I - 165BHP	33-2304	HP-1008
Legacy IV	3.0L H6 F/I	33-2304	
Outback	2.5L H4 F/I	33-2304	HP-1008
Outback	3.0L H6 F/I	33-2304	HP-1004
Outback XT	2.5L H4 F/I	33-2304	HP-1008
Tribeca	3.0L H6 F/I	33-2304	
2005 SUBARU			
Baja	2.5L H4 F/I	33-2075	HP-1008
Baja Sport	2.5L H4 F/I	33-2154	HP-1015
Forester	2.0L H4 F/I	33-2232	
Forester	2.5L H4 F/I	33-2075	HP-1008
		33-2075 ♦	HP-1008
Forester	2.5L H4 F/I - Non-US, exc. Turbo	33-2154	HP-1008
Forester	2.5L H4 F/I - Non-US, Turbo	33-2075	HP-1008
Impreza	1.6L H4 F/I - 95BHP	33-2154	
Impreza	2.0L H4 F/I		HP-1008
Impreza	2.0L H4 F/I - exc. Turbo	33-2154 ♦	HP-1008
Impreza	2.0L H4 F/I - Turbo	33-2232 ♦	HP-1008
Impreza	2.5L H4 F/I	33-2232	HP-1015
Impreza WRX	2.0L H4 F/I		HP-1008

*Indicates 2 filters required ♦ - Intake kit available - see page 80 Applications updated daily at knfilters.com

Vehicle	Engine Type	Air Filter	Oil Filter
2005 SUBARU			
Impreza WRX	2.0L H4 F/I - Non-US, exc. Turbo	33-2154 ♦	HP-1008
Impreza WRX	2.0L H4 F/I - Non-US, Turbo	33-2232 ♦	HP-1008
Impreza WRX	2.0L H4 F/I - US	33-2075 ♦	HP-1008
Impreza WRX STi	2.0L H4 F/I	33-2154 ♦	HP-1008
Impreza WRX STi	2.5L H4 F/I	33-2232 ♦	HP-1008
Legacy	2.5L H4 F/I	33-2304	HP-1008
Legacy GT	2.5L H4 F/I	33-2304 ♦	HP-1008
Legacy IV	2.0L H4 F/I - 138BHP, 165BHP	33-2304	
Legacy IV	2.5L H4 F/I		HP-1008
Legacy IV	2.5L H4 F/I - 165BHP	33-2304	HP-1008
Legacy IV	3.0L H6 F/I	33-2304	
Outback	2.5L H4 F/I	33-2304	HP-1008
Outback	3.0L H6 F/I	33-2304	HP-1004
Outback XT	2.5L H4 F/I	33-2304	HP-1008
Tribeca	3.0L H6 F/I	33-2304	
2004 SUBARU			
Baja	2.5L H4 F/I	33-2075	HP-1008
Baja Sport	2.5L H4 F/I	33-2154	HP-1015
Forester	2.0L H4 F/I	33-2232	
Forester	2.5L H4 F/I		HP-1008
Forester	2.5L H4 F/I - exc. Turbo	33-2154	HP-1008
Forester	2.5L H4 F/I - Turbo	33-2075 ♦	HP-1008
Impreza	2.0L H4 F/I		HP-1008
Impreza	2.0L H4 F/I - exc. Turbo	33-2154 ♦	HP-1008
Impreza	2.0L H4 F/I - Turbo	33-2232 ♦	HP-1008
Impreza	2.5L H4 F/I	33-2154	HP-1015
Impreza WRX	2.0L H4 F/I		HP-1008
Impreza WRX	2.0L H4 F/I - Non-US, exc. Turbo	33-2154 ♦	HP-1008
Impreza WRX	2.0L H4 F/I - Non-US, Turbo	33-2232 ♦	HP-1008
Impreza WRX	2.0L H4 F/I - US	33-2075 ♦	HP-1008
Impreza WRX STi	2.0L H4 F/I	33-2154 ♦	HP-1008
Impreza WRX STi	2.5L H4 F/I	33-2075 ♦	HP-1008
Legacy	2.5L H4 F/I		HP-1008
Legacy	2.5L H4 F/I - OEM 16546AA020	33-2232	HP-1008
Legacy	2.5L H4 F/I - OEM 16546AA070	33-2154	HP-1008
Legacy IV	2.0L H4 F/I - 138BHP	33-2304	
Legacy IV	2.5L H4 F/I - 165BHP	33-2304	
Legacy IV	3.0L H6 F/I	33-2304	
Outback	2.5L H4 F/I		HP-1008
Outback	2.5L H4 F/I - exc. Turbo	33-2154	HP-1008
Outback	2.5L H4 F/I - Non-US	33-2304	HP-1008
Outback	2.5L H4 F/I - Turbo	33-2075	HP-1008
Outback	3.0L H6 F/I		HP-1004
Outback	3.0L H6 F/I - 245BHP, Non-US	33-2304	HP-1004
Outback	3.0L H6 F/I - Non-US, 245BHP	33-2304	HP-1004
Outback	3.0L H6 F/I - VDC	33-2075	HP-1004
2003 SUBARU			
Baja	2.5L H4 F/I	33-2154	HP-1015
Forester	2.0L H4 F/I	33-2232	
Forester	2.5L H4 F/I	33-2154	HP-1015
Forester	2.5L H4 F/I - Non-US, Turbo	33-2154	HP-1015
Forester	2.5L H4 F/I - Turbo, Non-US	33-2075	HP-1015
Impreza	1.6L H4 F/I - 95BHP	33-2154	
Impreza	2.0L H4 F/I		HP-1015

Vehicle	Engine Type	Air Filter	Oil Filter
2003 SUBARU			
Impreza	2.0L H4 F/I - exc. Turbo	33-2154 ♦	HP-1015
Impreza	2.0L H4 F/I - Turbo	33-2232 ♦	HP-1015
Impreza	2.5L H4 F/I	33-2154	HP-1015
Impreza WRX	2.0L H4 F/I	33-2232 ♦	HP-1015
Impreza WRX STi	2.0L H4 F/I	33-2154 ♦	HP-1015
Legacy	2.5L H4 F/I		HP-1015
Legacy	2.5L H4 F/I - OEM 16546AA020	33-2232	HP-1015
Legacy	2.5L H4 F/I - OEM 16546AA070	33-2154	HP-1015
Legacy III	2.0L H4 F/I	33-2154	
Legacy III	2.5L H4 F/I	33-2154	HP-1015
Legacy IV	2.0L H4 F/I - 138BHP	33-2304	
Legacy IV	2.5L H4 F/I - 165BHP	33-2304	
Legacy IV	3.0L H6 F/I	33-2304	
Outback	2.5L H4 F/I	33-2154	HP-1008
Outback	2.5L H4 F/I - Non-US, 156BHP	33-2154	HP-1008
Outback	2.5L H4 F/I - Non-US, 165BHP	33-2304	HP-1008
Outback	3.0L H6 F/I	33-2232	HP-1004
Outback	3.0L H6 F/I - Non-US, 209BHP	33-2232	HP-1004
Outback	3.0L H6 F/I - Non-US, 245BHP	33-2304	HP-1004
2002 SUBARU			
Forester	2.0L H4 F/I	33-2232	
Forester	2.5L H4 F/I	33-2154	HP-1015
Forester	2.5L H4 F/I - Non-US, Turbo	33-2154	HP-1015
Forester	2.5L H4 F/I - Turbo, Non-US	33-2075	HP-1015
Impreza	1.6L H4 F/I - 95BHP	33-2154	
Impreza	2.0L H4 F/I		HP-1015
Impreza	2.0L H4 F/I - exc. Turbo	33-2154 ♦	HP-1015
Impreza	2.0L H4 F/I - Turbo	33-2232 ♦	HP-1015
Impreza	2.5L H4 F/I	33-2154	HP-1015
Impreza RS	2.5L H4 F/I	33-2154	HP-1015
Impreza WRX	2.0L H4 F/I	33-2232 ♦	HP-1015
Impreza WRX STi	2.0L H4 F/I	33-2232 ♦	HP-1015
Legacy	2.5L H4 F/I		HP-1015
Legacy	2.5L H4 F/I - OEM 16546AA020	33-2232	HP-1015
Legacy	2.5L H4 F/I - OEM 16546AA070	33-2154	HP-1015
Legacy III	2.0L H4 F/I	33-2154	
Legacy III	2.5L H4 F/I	33-2154	HP-1015
Outback	2.5L H4 F/I	33-2154	HP-1008
Outback	3.0L H6 F/I	33-2232	HP-1004
2001 SUBARU			
Forester	2.0L H4 F/I	33-2232	
Forester	2.5L H4 F/I	33-2154	HP-1015
Impreza	2.0L H4 F/I - exc. Turbo	33-2154 ♦	
Impreza	2.0L H4 F/I - Turbo	33-2232 ♦	
Impreza	2.2L H4 F/I	33-2154	HP-1015
Impreza	2.5L H4 F/I	33-2154	HP-1015
Impreza WRX	2.0L H4 F/I	33-2232 ♦	
Impreza WRX	2.2L H4 F/I	33-2154	
Legacy	2.5L H4 F/I		HP-1015
Legacy	2.5L H4 F/I - OEM 16546AA020	33-2232	HP-1015
Legacy	2.5L H4 F/I - OEM 16546AA070	33-2154	HP-1015
Legacy III	2.0L H4 F/I	33-2154	
Legacy III	2.5L H4 F/I	33-2154	HP-1015
Outback	2.5L H4 F/I	33-2154	HP-1008

*Indicates 2 filters required ♦ - Intake kit available - see page 80 Applications updated daily at knfilters.com

Vehicle	Engine Type	Air Filter	Oil Filter
2001 SUBARU			
Outback	3.0L H6 F/I	33-2232	HP-1004
2000 SUBARU			
Forester	2.0L H4 F/I	33-2232	
Forester	2.5L H4 F/I	33-2154	HP-1015
Impreza	1.8L H4 F/I	33-2232	HP-1015
Impreza	2.0L H4 F/I	33-2232 ♦	
Impreza	2.2L H4 F/I	33-2154	HP-1015
Impreza	2.5L H4 F/I	33-2154	HP-1015
Impreza WRX	2.0L H4 F/I	33-2232 ♦	
Legacy	2.5L H4 F/I		HP-1015
Legacy	2.5L H4 F/I - OEM 16546AA020	33-2232	HP-1015
Legacy	2.5L H4 F/I - OEM 16546AA070	33-2154	HP-1015
Legacy III	2.0L H4 F/I	33-2154	
Legacy III	2.5L H4 F/I	33-2154	HP-1015
Outback	2.5L H4 F/I	33-2154	HP-1015
Outback	3.0L H6 F/I	33-2232	
1999 SUBARU			
Forester	2.0L H4 F/I	33-2232	
Forester	2.5L H4 F/I		HP-1015
Forester	2.5L H4 F/I - OEM 16546AA020	33-2232	HP-1015
Forester	2.5L H4 F/I - OEM 16546AA070	33-2154	HP-1015
Impreza	1.6L H4 F/I - 90BHP	33-2232	
Impreza	1.6L H4 F/I - 95BHP	33-2154	
Impreza	1.8L H4 F/I	33-2232	HP-1015
Impreza	2.0L H4 F/I	33-2232 ♦	
Impreza	2.2L H4 F/I		HP-1015
Impreza	2.2L H4 F/I - OEM 16546AA020	33-2232	HP-1015
Impreza	2.2L H4 F/I - OEM 16546AA070	33-2154	HP-1015
Impreza	2.5L H4 F/I		HP-1015
Impreza	2.5L H4 F/I - OEM 16546AA020	33-2075	HP-1015
Impreza	2.5L H4 F/I - OEM 16546AA070	33-2154	HP-1015
Legacy	2.2L H4 F/I		HP-1015
Legacy	2.2L H4 F/I - OEM 16546AA020	33-2232	HP-1015
Legacy	2.2L H4 F/I - OEM 16546AA070	33-2154	HP-1015
Legacy	2.5L H4 F/I		HP-1015
Legacy	2.5L H4 F/I - OEM 16546AA020	33-2232	HP-1015
Legacy	2.5L H4 F/I - OEM 16546AA070	33-2154	HP-1015
Legacy II	2.0L H4 F/I	33-2232	
Legacy II	2.2L H4 F/I	33-2232	HP-1015
Legacy II	2.5L H4 F/I	33-2232	HP-1015
Legacy III	2.0L H4 F/I	33-2154	
Legacy III	2.5L H4 F/I	33-2154	HP-1015
1998 SUBARU			
Forester	2.0L H4 F/I	33-2232	
Forester	2.5L H4 F/I	33-2232	HP-1015
Impreza	1.6L H4 F/I - 90BHP	33-2232	
Impreza	1.6L H4 F/I - 95BHP	33-2154	
Impreza	1.8L H4 F/I	33-2232	HP-1015
Impreza	2.0L H4 F/I	33-2232 ♦	
Impreza	2.2L H4 F/I		HP-1015
Impreza	2.5L H4 F/I		HP-1015
Justy II	1.3L H4 F/I	E-9209	
Legacy	2.2L H4 F/I	33-2232	HP-1015
Legacy	2.5L H4 F/I		HP-1015
Legacy	2.5L H4 F/I - OEM 16546AA020	33-2232	HP-1015

Vehicle	Engine Type	Air Filter	Oil Filter
1998 SUBARU			
Legacy	2.5L H4 F/I - OEM 16546AA070	33-2154	HP-1015
Legacy II	2.0L H4 F/I	33-2232	
Legacy II	2.2L H4 F/I	33-2232	HP-1015
Legacy II	2.5L H4 F/I	33-2232	HP-1015
Legacy III	2.0L H4 F/I	33-2154	
Legacy III	2.5L H4 F/I	33-2154	HP-1015
Legacy Outback	2.5L H4 F/I	33-2232	HP-1015
1997 SUBARU			
Forester	2.5L H4 F/I	33-2232	
Impreza	1.6L H4 F/I - 90BHP	33-2232	
Impreza	1.8L H4 F/I	33-2232	HP-1015
Impreza	2.0L H4 F/I	33-2232 ♦	
Impreza	2.2L H4 F/I		HP-1015
Legacy	2.2L H4 F/I	33-2232	HP-1015
Legacy	2.5L H4 F/I		HP-1015
Legacy	2.5L H4 F/I - OEM 16546AA020	33-2232	HP-1015
Legacy	2.5L H4 F/I - OEM 16546AA070	33-2154	HP-1015
Legacy II	2.0L H4 F/I	33-2232	
Legacy II	2.2L H4 F/I	33-2232	HP-1015
Legacy II	2.5L H4 F/I	33-2232	HP-1015
Legacy Outback	2.5L H4 F/I	33-2232	HP-1015
SVX	3.3L H6 F/I	33-2232	HP-1004
1996 SUBARU			
Impreza	1.6L H4 F/I - 90BHP	33-2232	
Impreza	1.8L H4 F/I	33-2232	HP-1015
Impreza	2.0L H4 F/I	33-2232 ♦	
Impreza	2.2L H4 F/I		HP-1015
Legacy	2.2L H4 F/I	33-2232	HP-1015
Legacy	2.5L H4 F/I		HP-1015
Legacy	2.5L H4 F/I - OEM 16546AA020	33-2232	HP-1015
Legacy	2.5L H4 F/I - OEM 16546AA070	33-2154	HP-1015
Legacy II	2.0L H4 F/I	33-2232	
Legacy II	2.2L H4 F/I	33-2232	HP-1015
Legacy II	2.5L H4 F/I	33-2232	HP-1015
Legacy Outback	2.5L H4 F/I	33-2232	HP-1015
SVX	3.3L H6 F/I	33-2232	HP-1004
1995 SUBARU			
Impreza	1.6L H4 F/I - 90BHP	33-2232	
Impreza	1.8L H4 F/I	33-2232	HP-1015
Impreza	2.0L H4 F/I	33-2232 ♦	
Impreza	2.2L H4 F/I		HP-1015
Legacy	2.2L H4 F/I	33-2232	HP-1015
Legacy II	2.0L H4 F/I	33-2232	
Legacy II	2.2L H4 F/I	33-2232	HP-1015
SVX	3.3L H6 F/I	33-2232	HP-1004
1994 SUBARU			
Impreza	1.8L H4 F/I	33-2232	HP-1015
Impreza	2.0L H4 F/I	33-2232 ♦	
Justy	1.2L L3 F/I		HP-1008
Justy I	1.2L L3 CARB	E-2630	HP-1008
Legacy	2.2L H4 F/I - exc. Turbo		HP-1015
Legacy	2.2L H4 F/I - Turbo	33-2232	HP-1015
Legacy I	1.8L H4 F/I	33-2232	
Legacy I	2.0L H4 F/I	33-2232	
Legacy I	2.2L H4 F/I	33-2232	HP-1015
Legacy II	2.0L H4 F/I	33-2232	
Legacy II	2.2L H4 F/I	33-2232	HP-1015
SVX	3.3L H6 F/I	33-2232	HP-1004

*Indicates 2 filters required ♦ - Intake kit available - see page 80 Applications updated daily at knfilters.com

Vehicle	Engine Type	Air Filter	Oil Filter
1993 SUBARU			
Impreza	1.6L H4 F/I - 90BHP	33-2232	
Impreza	1.8L H4 F/I	33-2232	HP-1015
Legacy	2.2L H4 F/I - exc. Turbo		HP-1015
Legacy	2.2L H4 F/I - Turbo	33-2232	HP-1015
Legacy I	1.8L H4 F/I	33-2232	
Legacy I	2.0L H4 F/I	33-2232	
Legacy I	2.2L H4 F/I	33-2232	HP-1015
SVX	3.3L H6 F/I	33-2232	HP-1004
1992 SUBARU			
Impreza	1.6L H4 F/I - 90BHP	33-2232	
Legacy	1.8L CARB - GL 4WD	33-2615	
Legacy	2.2L H4 F/I - exc. Turbo		HP-1015
Legacy	2.2L H4 F/I - Turbo	33-2232	HP-1015
Legacy I	1.8L H4 F/I	33-2232	
Legacy I	2.0L H4 F/I	33-2232	
Legacy I	2.2L H4 F/I	33-2232	HP-1015
Loyale	1.8L H4 F/I	33-2232	HP-2008
SVX	3.3L H6 F/I	33-2232	HP-1004
1991 SUBARU			
Justy	1.2L L3 CARB	E-2630	HP-1008
Justy	1.2L L3 F/I		HP-1008
Justy I	1.2L L3 CARB	E-2630	HP-1008
Legacy	1.8L CARB - GL 4WD	33-2615	
Legacy	2.2L H4 F/I	33-2232	HP-1015
Legacy I	1.8L H4 F/I	33-2232	
Legacy I	2.0L H4 F/I	33-2232	
Legacy I	2.2L H4 F/I	33-2232	HP-1015
1990 SUBARU			
Justy	1.2L L3 CARB	E-2630	HP-1008
Justy	1.2L L3 F/I		HP-1008
Justy I	1.2L L3 CARB	E-2630	HP-1008
Legacy	1.8L CARB - GL 4WD	33-2615	
Legacy	2.2L H4 F/I	33-2232	HP-1015
Legacy I	2.2L H4 F/I	33-2232	HP-1015
Loyale	1.8L H4 F/I	33-2232	HP-2008
1988 SUBARU			
GL	1.8L H4 CARB	E-2970	HP-2008
GL	1.8L H4 F/I	33-2010	HP-2008
Justy	1.2L L3 CARB	E-2630	HP-1008
Justy I	1.2L L3 CARB	E-2630	HP-1008
1987 SUBARU			
DL	1.8L H4 CARB	E-2970	HP-2008
GL	1.8L H4 CARB	E-2970	HP-2008
GL	1.8L H4 F/I	33-2010	HP-2008
1986 SUBARU			
Brat	1.8L H4 CARB	E-2970	HP-2008
GL	1.8L H4 CARB	E-2970	HP-2008
GL	1.8L H4 F/I	33-2010	HP-2008
1985 SUBARU			
Brat	1.8L H4 CARB	E-2970	HP-2008
GL	1.8L H4 CARB	E-2970	HP-2008
1984 SUBARU			
Brat	1.8L H4 CARB	E-2970	HP-2008
Brat	1.8L H4 F/I		HP-2008
GL	1.8L H4 CARB	E-2970	HP-2008
GL	1.8L H4 F/I	33-2010	HP-2008
1983 SUBARU			
GL	1.8L H4 CARB	E-2970	HP-2008

Vehicle	Engine Type	Air Filter	Oil Filter
1980 SUBARU			
Brat	1.6L H4 CARB	E-2970	HP-2005
1979 SUBARU			
Brat	1.6L H4 CARB	E-2620	HP-2005
1967 SUNBEAM			
Alpine	105 L4 CARB		HP-2004
Tiger	289 V8 CARB		HP-3001
1966 SUNBEAM			
Tiger	260 V8 CARB		HP-3001
Tiger	289 V8 CARB		HP-3001
1965 SUNBEAM			
Tiger	260 V8 CARB		HP-3001
Tiger	289 V8 CARB		HP-3001
2013 SUZUKI			
Alto V	1.0L L3 F/I	33-2968	
Grand Vitara	2.4L L4 F/I	33-2429	HP-1003
GSXR600	600	SU-7511	KN-138
		SU-7511	KN-138C
GSXR1000	1000	SU-1009	KN-138
		SU-1009	KN-138C
SX4	2.0L L4 F/I	33-2463	HP-1003
2012 SUZUKI			
Alto V	1.0L L3 F/I	33-2968	
AN400 Burgman	400	SU-4007	KN-131
AN400 Z Burgman	400		KN-131
AN650 A Burgman Executive	650		KN-138
			KN-138C
AN650 Burgman	650		KN-138
			KN-138C
Boulevard M109R	1783	SU-1806	KN-138
		SU-1806	KN-138C
Boulevard M109R Ltd. Ed.	1773		KN-138
			KN-138C
Boulevard S40	652	SU-6595	
DL650 V-Strom	650	SU-1002	KN-138
		SU-1002	KN-138C
DL1000 V-Strom	996	SU-1002	KN-138
		SU-1002	KN-138C
DR650SE	644	SU-6596	KN-137
DRZ400S	398	SU-4000	KN-139
Equator	2.5L L4 F/I	33-2324	HP-1008
Equator	4.0L V6 F/I	33-2286	HP-1010
Grand Vitara	1.6L L4 F/I	33-2361	
Grand Vitara	1.9L L4 DSL - OEM 1378017K00	33-2429	
Grand Vitara	1.9L L4 DSL - OEM 1378065J00	33-2361	
Grand Vitara	2.4L L4 F/I	33-2429	HP-1003
GSF1250 Bandit	1250		KN-138
			KN-138C
GSF1250 Bandit S	1250		KN-138
			KN-138C
GSX1300BK B-King	1340	SU-1348	KN-138
		SU-1348	KN-138C
GSX1300R Hayabusa	1340	SU-1308	KN-138
		SU-1308	KN-138C
GSX1300R Hayabusa	1340 - Race Specific	SU-1308R	KN-138
GSXR600	600	SU-7511	KN-138
		SU-7511	KN-138C
GSXR600	600 - Race Specific	SU-7511R	KN-138

*Indicates 2 filters required ♦ - Intake kit available - see page 80 Applications updated daily at knfilters.com

2012 SUZUKI

Vehicle	Engine Type	Air Filter	Oil Filter
GSXR750	750	SU-7511	KN-138
		SU-7511	KN-138C
GSXR750	750 - Race Specific	SU-7511R	KN-138
GSXR1000	1000	SU-1009	KN-138
		SU-1009	KN-138C
GSXR1000	1000 - Race Specific	SU-1009R	KN-138
Kizashi	2.4L L4 F/I	33-2441	HP-1003
LTA400F KingQuad Auto 4x4	376	SU-5002	KN-138
		SU-5002	KN-138C
LTA500XP KingQuad AXI PS	500	SU-7005	KN-138
		SU-7005	KN-138C
LTA500XP KingQuad AXI PS Camo	500	SU-7005	KN-138
		SU-7005	KN-138C
LTA750X KingQuad AXi 4x4	750	SU-7005	KN-138
		SU-7005	KN-138C
LTA750X KingQuad AXi 4x4 Camo	750	SU-7005	KN-138
		SU-7005	KN-138C
LTF250 Ozark	246	SU-2504	KN-132
LTF400F KingQuad 4x4	376	SU-5002	KN-138
		SU-5002	KN-138C
LTZ400 Quadsport	400	SU-4002	KN-139
RM85L	85	SU-8086	
RMX450Z	450		KN-207
RMZ250	249	YA-2506XD	KN-207
SFV650 Gladius	645	SU-6509	KN-138
		SU-6509	KN-138C
Splash	1.0L L3 F/I	33-2949	
Swift IV	1.2L L4 F/I	33-2974	
Swift IV	1.3L L4 DSL	33-2952	
Swift IV	1.6L L4 F/I	33-2075	
SX4	1.6L L4 F/I	33-2075	
SX4	2.0L L4 F/I	33-2463	HP-1003
TU250X	250		KN-136
VL800	805	SU-8009	
VL800 Intruder C800	805	SU-8009	KN-138
		SU-8009	KN-138C
VLR1800 C1800R Intruder	1800		KN-138
			KN-138C

2011 SUZUKI

Vehicle	Engine Type	Air Filter	Oil Filter
Alto V	1.0L L3 F/I	33-2968	
AN400 Burgman	400	SU-4007	KN-131
AN400 Z Burgman	400		KN-131
AN650 A Burgman Executive	650		KN-138
			KN-138C
Boulevard C50	800		KN-138
			KN-138C
Boulevard M50	800		KN-138
			KN-138C
Boulevard M109R	1773	SU-1806	KN-138
		SU-1806	KN-138C

2011 SUZUKI

Vehicle	Engine Type	Air Filter	Oil Filter
Boulevard M109R Ltd. Ed.	1773	SU-1806	KN-138
		SU-1806	KN-138C
DL650 V-Strom	650	SU-1002	KN-138
		SU-1002	KN-138C
DRZ400S	400	SU-4000	KN-139
Equator	2.5L L4 F/I	33-2324	HP-1008
Equator	4.0L V6 F/I	33-2286	HP-1010
Grand Vitara	1.9L L4 DSL - OEM 1378017K00	33-2429	
Grand Vitara	1.9L L4 DSL - OEM 1378065J00	33-2361	
Grand Vitara	2.4L L4 F/I	33-2429	HP-1003
Grand Vitara	3.2L V6 F/I		HP-1017
GSF650 Bandit	650		KN-138
			KN-138C
GSF1250 Bandit	1250		KN-138
			KN-138C
GSF1250 Bandit S	1250		KN-138
			KN-138C
GSR600	600	SU-6006	
GSR750	750	SU-6006	KN-138
		SU-6006	KN-138C
GSX650F	650		KN-138
			KN-138C
GSX1250	1250		KN-138
			KN-138C
GSX1250FA	1250	SU-6505	
GSX1300BK B-King	1340	SU-1348	KN-138
		SU-1348	KN-138C
GSX1300R Hayabusa	1340	SU-1308	KN-138
		SU-1308	KN-138C
GSX1300R Hayabusa	1340 - Race Specific	SU-1308R	KN-138
GSXR600	600	SU-7511	KN-138
		SU-7511	KN-138C
GSXR600	600 - Race Specific	SU-7511R	KN-138
GSXR750	750	SU-7511	KN-138
		SU-7511	KN-138C
GSXR750	750 - Race Specific	SU-7511R	KN-138
GSXR1000	1000	SU-1009	KN-138
		SU-1009	KN-138C
GSXR1000	1000 - Race Specific	SU-1009R	KN-138
Kizashi	2.4L L4 F/I	33-2441	HP-1003
LS650 Boulevard	650		KN-137
LTA400F KingQuad Auto 4x4	400	SU-5002	KN-138
		SU-5002	KN-138C
LTA400F KingQuad Auto 4x4 Camo	400		KN-138
			KN-138C
LTA500XP KingQuad AXI PS	500	SU-7005	KN-138
		SU-7005	KN-138C
LTA500XP KingQuad AXI PS Camo	500		KN-138
			KN-138C
LTA500XP KingQuad AXI PS Limited	500		KN-138
			KN-138C
LTA750X KingQuad AXi 4x4	750	SU-7005	KN-138

2011 SUZUKI

Vehicle	Engine Type	Air Filter	Oil Filter
LTA750X KingQuad AXi 4x4	750	SU-7005	KN-138C
LTA750X KingQuad AXi 4x4 Camo	750		KN-138
			KN-138C
LTF400F KingQuad 4x4	400	SU-5002	KN-138
		SU-5002	KN-138C
LTF400F KingQuad 4x4 Camo	400		KN-138
			KN-138C
RMX450Z	450		KN-207
RMZ250	249	YA-2506XD	KN-207
SFV650 Gladius	645	SU-6509	KN-138
		SU-6509	KN-138C
Splash	1.0L L3 F/I	33-2949	
Splash	1.2L L4 F/I	33-2974	
Swift IV	1.2L L4 F/I	33-2974	
Swift IV	1.3L L4 DSL	33-2952	
Swift IV	1.6L L4 F/I	33-2075	
SX4	1.6L L4 F/I	33-2075	
SX4	2.0L L4 F/I	33-2463	HP-1003
TU250X	250		KN-136
UX125 Sixteen	125		KN-131
VL800	805	SU-8009	
VL800 Intruder C800	805	SU-8009	KN-138
		SU-8009	KN-138C
VLR1800 C1800R Intruder	1800		KN-138
			KN-138C

2010 SUZUKI

Vehicle	Engine Type	Air Filter	Oil Filter
Alto V	1.0L L3 F/I	33-2968	
AN400 Burgman	400		KN-131
AN400 Z Burgman	400		KN-131
AN650 A Burgman Executive	650		KN-138
			KN-138C
AN650 Burgman	650		KN-138
			KN-138C
Boulevard C50	800		KN-138
			KN-138C
Boulevard C50T	800		KN-138
			KN-138C
Boulevard M50	800		KN-138
			KN-138C
DL650 V-Strom	650	SU-1002	KN-138
		SU-1002	KN-138C
DL1000 V-Strom	1000	SU-1002	KN-138
		SU-1002	KN-138C
DRZ125L	125		KN-132
DRZ400S	400		KN-139
DRZ400SM	400		KN-139
Equator	2.5L L4 F/I	33-2324	HP-1008
Equator	4.0L V6 F/I	33-2286	HP-1010
Grand Vitara	1.6L L4 F/I	33-2361	
Grand Vitara	1.9L L4 DSL - OEM 1378017K00	33-2429	
Grand Vitara	1.9L L4 DSL - OEM 1378065J00	33-2361	
Grand Vitara	2.0L L4 F/I	33-2361	
Grand Vitara	2.4L L4 F/I	33-2429	HP-1003
Grand Vitara	3.2L V6 F/I	33-2429	HP-1017

2010 SUZUKI

Vehicle	Engine Type	Air Filter	Oil Filter
GS500F	500		KN-133
GSF650 Bandit	650	SU-6505	KN-138
		SU-6505	KN-138C
GSF1250 Bandit	1250	SU-6505	KN-138
		SU-6505	KN-138C
GSF1250 Bandit S	1250		KN-138
			KN-138C
GSR600	600	SU-6006	KN-138
		SU-6006	KN-138C
GSX650F	650		KN-138
			KN-138C
GSX1300BK B-King	1340	SU-1348	KN-138
		SU-1348	KN-138C
GSX1300R Hayabusa	1340	SU-1308	KN-138
		SU-1308	KN-138C
GSX1300R Hayabusa	1340 - Race Specific	SU-1308R	KN-138
GSXR600	600	SU-7506	KN-138
		SU-7506	KN-138C
GSXR600	600 - Race Specific	SU-7506R	KN-138
GSXR750	750	SU-7506	KN-138
		SU-7506	KN-138C
GSXR750	750 - Race Specific	SU-7506R	KN-138
GSXR1000	1000	SU-1009	KN-138
		SU-1009	KN-138C
GSXR1000	1000 - Race Specific	SU-1009R	KN-138
GZ250	250		KN-136
GZ250 Marauder	250		KN-136
Kizashi	2.4L L4 F/I	33-2441	HP-1003
LS650 Boulevard	650		KN-137
LTA400F KingQuad Auto 4x4	400		KN-138
			KN-138C
LTA400F KingQuad Auto 4x4 Camo	400		KN-138
			KN-138C
LTA450X KingQuad AXi 4x4 Camo	450		KN-138
			KN-138C
LTA500XP KingQuad AXI PS	500		KN-138
			KN-138C
LTA500XP KingQuad AXI PS Camo	500		KN-138
			KN-138C
LTA500XP KingQuad AXI PS Limited	500		KN-138
			KN-138C
LTF400F KingQuad 4x4	400		KN-138
			KN-138C
LTF400F KingQuad 4x4 Camo	400		KN-138
			KN-138C
RMX450Z	450		KN-207
SFV650 Gladius	650	SU-6509	KN-138
		SU-6509	KN-138C
Splash	1.2L L4 F/I - 86BHP	33-2949	
Splash	1.2L L4 F/I - Exc. 86BHP	33-2974	
SV650 SA	650		KN-138

*Indicates 2 filters required ♦ - Intake kit available - see page 80 Applications updated daily at knfilters.com

Vehicle	Engine Type	Air Filter	Oil Filter
2010 SUZUKI			
SV650 SA	650		KN-138C
SV650S	650		KN-138
			KN-138C
Swift III	1.3L L4 DSL - to 9/10	33-2952	
Swift III	1.3L L4 F/I - VIN JSA	33-2826 ♦	
Swift III	1.3L L4 F/I - Vin JSM	33-2824 ♦	
Swift III	1.5L L4 F/I	33-2824 ♦	
Swift III	1.6L L4 F/I	33-2824	
Swift IV	1.2L L4 F/I	33-2974	
SX4	1.5L L4 F/I	33-2954	
SX4	1.6L L4 F/I - 109BHP	33-2954	
SX4	1.6L L4 F/I - 120BHP	33-2075	
SX4	2.0L L4 F/I	33-2463	HP-1003
TU250X	250		KN-136
VLR1800 C109 Boulevard	1800		KN-138
			KN-138C
VLR1800 C1800RT Intruder	1800		KN-138
			KN-138C
VZ1500 Intruder M1500	1500		KN-138
			KN-138C
VZR1800 Intruder	1800		KN-138
			KN-138C
2009 SUZUKI			
Alto V	1.0L L3 F/I	33-2968	
AN400 Burgman	400	SU-4007	KN-131
AN400 Z Burgman	400		KN-131
AN650 A Burgman Executive	650		KN-138
			KN-138C
AN650 Burgman	650		KN-138
			KN-138C
AN650 Burgman Executive	650		KN-138
			KN-138C
Boulevard C50	800		KN-138
			KN-138C
Boulevard C50 Custom Volusia	800		KN-138
			KN-138C
Boulevard C50 Special Edition	800		KN-138
			KN-138C
Boulevard C50 Volusia	800		KN-138
			KN-138C
Boulevard C50T	800		KN-138
			KN-138C
Boulevard C90	1500	SU-1598	KN-138
		SU-1598	KN-138C
Boulevard C90T	1500	SU-1598	KN-138
		SU-1598	KN-138C
Boulevard C109R	1800		KN-138
			KN-138C
Boulevard C109RT	1800		KN-138
			KN-138C
Boulevard M50	800		KN-138

Vehicle	Engine Type	Air Filter	Oil Filter
2009 SUZUKI			
Boulevard M50	800		KN-138C
Boulevard M50 Special Edition	800		KN-138
			KN-138C
Boulevard M90	1500		KN-138
			KN-138C
Boulevard M109R	1773	SU-1806	KN-138
		SU-1806	KN-138C
Boulevard M109R Ltd. Ed.	1773	SU-1806	KN-138
		SU-1806	KN-138C
Boulevard M109R2	1773	SU-1806	KN-138
		SU-1806	KN-138C
Boulevard S40	650	SU-6595	KN-137
Boulevard S50	800	SU-7086	KN-138
		SU-7086	KN-138C
Boulevard S83	1400	SU-1487	KN-138
		SU-1487	KN-138C
DL650 V-Strom	650	SU-1002	KN-138
		SU-1002	KN-138C
DL1000 V-Strom	1000	SU-1002	KN-138
		SU-1002	KN-138C
DR200SE	200		KN-132
DR650SE	650	SU-6596	KN-137
DRZ125L	125	KA-1203	KN-132
DRZ400S	400	SU-4000	KN-139
DRZ400SM	400	SU-4000	KN-139
Equator	2.5L L4 F/I	33-2324	HP-1008
Equator	4.0L V6 F/I	33-2286	HP-1010
FL125 SDW Address	250		KN-207
Grand Vitara	1.6L L4 F/I	33-2361	
Grand Vitara	1.9L L4 DSL	33-2361	
Grand Vitara	2.0L L4 F/I	33-2361	
Grand Vitara	2.4L L4 F/I	33-2429	HP-1003
Grand Vitara	3.2L V6 F/I	33-2429	HP-1017
GS500F	500	SU-5589	KN-133
GSF650 Bandit	650	SU-6505	KN-138
		SU-6505	KN-138C
GSF650 Bandit S	650	SU-6505	KN-138
		SU-6505	KN-138C
GSF1250 Bandit	1250	SU-6505	KN-138
		SU-6505	KN-138C
GSF1250 Bandit S	1250	SU-6505	KN-138
		SU-6505	KN-138C
GSR600	600	SU-6006	KN-138
		SU-6006	KN-138C
GSX650F	650	SU-6505	KN-138
		SU-6505	KN-138C
GSX1300BK B-King	1340	SU-1348	KN-138
		SU-1348	KN-138C
GSX1300R Hayabusa	1340	SU-1308	KN-138
		SU-1308	KN-138C
GSX1300R Hayabusa	1340 - Race Specific	SU-1308R	KN-138
GSXR600	600	SU-7506	KN-138
		SU-7506	KN-138C
GSXR600	600 - Race Specific	SU-7506R	KN-138
GSXR750	750	SU-7506	KN-138
		SU-7506	KN-138C
GSXR750	750 - Race Specific	SU-7506R	KN-138
GSXR1000	1000	SU-1009	KN-138
		SU-1009	KN-138C
GSXR1000	1000 - Race Specific	SU-1009R	KN-138
GZ250	250		KN-136

*Indicates 2 filters required ♦ - Intake kit available - see page 80 Applications updated daily at knfilters.com

Vehicle	Engine Type	Air Filter	Oil Filter
2009 SUZUKI			
GZ250 Marauder	250		KN-136
LTA400F KingQuad Auto 4x4	400	SU-5002	KN-138
		SU-5002	KN-138C
LTA400F KingQuad Auto 4x4 Camo	400	SU-5002	KN-138
		SU-5002	KN-138C
LTA450X KingQuad AXi 4x4	450	SU-7005	KN-138
		SU-7005	KN-138C
LTA450X KingQuad AXi 4x4 Camo	450	SU-7005	KN-138
		SU-7005	KN-138C
LTA500XP KingQuad AXI PS	500		KN-138
			KN-138C
LTA500XP KingQuad AXI PS Camo	500		KN-138
			KN-138C
LTA500XP KingQuad AXI PS Limited	500		KN-138
			KN-138C
LTA750X KingQuad AXi 4x4	750	SU-7005	KN-138
		SU-7005	KN-138C
LTA750X KingQuad AXi 4x4 Camo	750	SU-7005	KN-138
		SU-7005	KN-138C
LTF250 Ozark	250	SU-2504	KN-132
LTF400F KingQuad 4x4	400	SU-5002	KN-138
		SU-5002	KN-138C
LTF400F KingQuad 4x4 Camo	400	SU-5002	KN-138
		SU-5002	KN-138C
LTR450 QuadRacer	450	SU-4506	KN-139
LTZ250 Quadsport	250	SU-2504	KN-132
LTZ400 Quadsport	400	SU-4002	KN-139
M800 Intruder	800		KN-138
			KN-138C
RMZ250	250	YA-2506XD	KN-207
RMZ450	450	YA-2506XD	KN-207
SFV650 Gladius	652	SU-6509	KN-138
		SU-6509	KN-138C
SV650	650	SU-6503	KN-138
		SU-6503	KN-138C
SV650S	650	SU-6503	KN-138
		SU-6503	KN-138C
SV650SF	650	SU-6503	KN-138
		SU-6503	KN-138C
Swift	1.5L L4 F/I	33-2824	
Swift III	1.3L L4 DSL	33-2952	
Swift III	1.3L L4 F/I - VIN JSA	33-2826 ♦	
Swift III	1.3L L4 F/I - Vin JSM	33-2824 ♦	
Swift III	1.5L L4 F/I	33-2824 ♦	
Swift III	1.6L L4 F/I	33-2824 ♦	
SX4	1.5L L4 F/I	33-2954	
SX4	1.6L L4 F/I - 109BHP	33-2954	

Vehicle	Engine Type	Air Filter	Oil Filter
2009 SUZUKI			
SX4	1.6L L4 F/I - 120BHP	33-2075	
SX4	1.9L L4 DSL	33-2399	
SX4	2.0L L4 F/I	33-2371	HP-1003
TU250X	250		KN-136
VL800 Intruder C800	805	SU-8009	KN-138
		SU-8009	KN-138C
VL1500LC Intruder	1500		KN-138
			KN-138C
VLR1800 C109 Boulevard	1800		KN-138
			KN-138C
VLR1800 C1800RT Intruder	1800		KN-138
			KN-138C
VS1400GLP Intruder	1400		KN-138
			KN-138C
VZ800 Intruder M800	800		KN-138
			KN-138C
VZ800 Marauder	805		KN-138
			KN-138C
VZ1500 Boulevard	1500		KN-138
			KN-138C
VZ1500 Intruder M1500	1500		KN-138
			KN-138C
VZR1800 Intruder	1800		KN-138
			KN-138C
XL-7	3.6L V6 F/I	33-2249	HP-1017
2008 SUZUKI			
AN400 Burgman	400	SU-4007	KN-131
AN650 A Burgman Executive	650		KN-138
			KN-138C
AN650 Burgman	650		KN-138
			KN-138C
AN650 Burgman Executive	650		KN-138
			KN-138C
Boulevard C50	800	SU-8001	KN-138
		SU-8001	KN-138C
Boulevard C50 Custom Volusia	800		KN-138
			KN-138C
Boulevard C50 Limited Edition	800	SU-8001	KN-138
		SU-8001	KN-138C
Boulevard C50 Volusia	800		KN-138
			KN-138C
Boulevard C50T	800	SU-8001	KN-138
		SU-8001	KN-138C
Boulevard C90	1500	SU-1598	KN-138
		SU-1598	KN-138C
Boulevard C90 Black	1500	SU-1598	KN-138
		SU-1598	KN-138C
Boulevard C90T	1500	SU-1598	KN-138
		SU-1598	KN-138C
Boulevard C109R	1800		KN-138
			KN-138C

*Indicates 2 filters required ♦ - Intake kit available - see page 80 Applications updated daily at knfilters.com

2008 SUZUKI

Vehicle	Engine Type	Air Filter	Oil Filter
Boulevard C109RT	1800		KN-138
			KN-138C
Boulevard C109T	1800		KN-138
			KN-138C
Boulevard M50	800	SU-8005	KN-138
		SU-8005	KN-138C
Boulevard M109R	1773	SU-1806	KN-138
		SU-1806	KN-138C
Boulevard M109R Ltd. Ed.	1773	SU-1806	KN-138
		SU-1806	KN-138C
Boulevard M109R2	1773	SU-1806	KN-138
		SU-1806	KN-138C
Boulevard S40	650	SU-6595	KN-137
Boulevard S50	800	SU-7086	KN-138
		SU-7086	KN-138C
Boulevard S83	1400	SU-1487	KN-138
		SU-1487	KN-138C
DL650 V-Strom	650	SU-1002	KN-138
		SU-1002	KN-138C
DL1000 V-Strom	1000	SU-1002	KN-138
		SU-1002	KN-138C
DR200SE	200		KN-132
DR650SE	650	SU-6596	KN-137
DRZ125L	125	KA-1203	KN-132
DRZ400E	400	SU-4000	KN-139
DRZ400S	400	SU-4000	KN-139
DRZ400SM	400	SU-4000	KN-139
FL125 SDW Address	250		KN-207
Forenza	2.0L L4 F/I	33-2330	HP-1001
Grand Vitara	1.6L L4 F/I	33-2361	
Grand Vitara	1.9L L4 DSL	33-2361	
Grand Vitara	2.0L L4 F/I	33-2361	
Grand Vitara	2.7L V6 F/I	33-2361	HP-1002
GS500F	500	SU-5589	KN-133
GS500H	500		KN-133
GSF650 Bandit	650	SU-6505	KN-138
		SU-6505	KN-138C
GSF650 Bandit S	650	SU-6505	KN-138
		SU-6505	KN-138C
GSF1250 Bandit S	1250	SU-6505	KN-138
		SU-6505	KN-138C
GSR600	600	SU-6006	KN-138
		SU-6006	KN-138C
GSX650F	650	SU-6505	KN-138
		SU-6505	KN-138C
GSX1300BK B-King	1340	SU-1348	KN-138
		SU-1348	KN-138C
GSX1300R Hayabusa	1340	SU-1308	KN-138
		SU-1308	KN-138C
GSX1300R Hayabusa	1340 - Race Specific	SU-1308R	KN-138
GSXR600	600	SU-7506	KN-138
		SU-7506	KN-138C
GSXR600	600 - Race Specific	SU-7506R	KN-138
GSXR750	750	SU-7506	KN-138
		SU-7506	KN-138C
GSXR750	750 - Race Specific	SU-7506R	KN-138
GSXR1000	1000	SU-1005	KN-138
		SU-1005	KN-138C
GSXR1000	1000 - Race Specific	SU-1005R	KN-138
GZ250	250		KN-136
GZ250 Marauder	250		KN-136

2008 SUZUKI

Vehicle	Engine Type	Air Filter	Oil Filter
LTA400F KingQuad Auto 4x4	400	SU-5002	KN-138
		SU-5002	KN-138C
LTA400F KingQuad Auto 4x4 Camo	400	SU-5002	KN-138
		SU-5002	KN-138C
LTA450X KingQuad AXi 4x4	450	SU-7005	KN-138
		SU-7005	KN-138C
LTA450X KingQuad AXi 4x4 Camo	450	SU-7005	KN-138
		SU-7005	KN-138C
LTA700X KingQuad 4x4	700		KN-138
			KN-138C
LTA750X KingQuad AXi 4x4	750	SU-7005	KN-138
		SU-7005	KN-138C
LTA750X KingQuad AXi 4x4 Camo	750	SU-7005	KN-138
		SU-7005	KN-138C
LTF250 Ozark	250	SU-2504	KN-132
LTF400F KingQuad 4x4	400	SU-5002	KN-138
		SU-5002	KN-138C
LTF400F KingQuad 4x4 Camo	400	SU-5002	KN-138
		SU-5002	KN-138C
LTR450 QuadRacer	450	SU-4506	KN-139
LTR450 QuadRacer Limited Edition	450	SU-4506	KN-139
LTZ90 QuadSport	90		KN-131
LTZ250 Quadsport	250	SU-2504	KN-132
LTZ400 Quadsport	400	SU-4002	KN-139
LTZ400 Quadsport Limited Edition	400	SU-4002	KN-139
M800 Intruder	800		KN-138
			KN-138C
Reno	2.0L L4 F/I	33-2330	HP-1001
RM85	85	SU-8086	
RM85L	85	SU-8086	
RMZ250	250	YA-2506XD	KN-207
RMZ450	450	YA-2506XD	KN-207
SV650	650	SU-6503	KN-138
		SU-6503	KN-138C
SV650S	650	SU-6503	KN-138
		SU-6503	KN-138C
Swift	1.5L L4 F/I	33-2824	
Swift III	1.3L L4 DSL	33-2952	
Swift III	1.3L L4 F/I - VIN JSA	33-2826 ♦	
Swift III	1.3L L4 F/I - Vin JSM	33-2824 ♦	
Swift III	1.5L L4 F/I	33-2824 ♦	
Swift III	1.6L L4 F/I	33-2824 ♦	HP-1001
Swift Plus	1.6L L4 F/I		HP-1001
SX4	1.5L L4 F/I	33-2954	
SX4	1.6L L4 F/I	33-2954	
SX4	1.9L L4 DSL	33-2399	
SX4	2.0L L4 F/I	33-2371	HP-1003
VLR1800 C109 Boulevard	1800		KN-138

*Indicates 2 filters required ♦ - Intake kit available - see page 80 Applications updated daily at knfilters.com

Vehicle	Engine Type	Air Filter	Oil Filter
2008 SUZUKI			
VLR1800 C109 Boulevard	1800		KN-138C
VLR1800 C1800R Intruder	1800		KN-138
			KN-138C
VS800 Intruder	800		KN-138
			KN-138C
VZ800 Intruder M800	800		KN-138
			KN-138C
VZ800 Marauder	800		KN-138
			KN-138C
VZR1800 Intruder	1800	SU-1806	KN-138
		SU-1806	KN-138C
Wagon R Plus	1.0L L4 F/I	33-2826	
Wagon R Plus	1.2L L4 F/I	33-2826	
XL-7	3.6L V6 F/I	33-2249	HP-1017
2007 SUZUKI			
Aerio	2.3L L4 F/I	33-2282	HP-1003
Alto IV	1.1L L4 F/I	33-2826	
AN400 Burgman	400	SU-4007	KN-131
AN650 A Burgman Executive	650		KN-138
			KN-138C
AN650 Burgman	650		KN-138
			KN-138C
AN650 Burgman Executive	650		KN-138
			KN-138C
Boulevard C50	800	SU-8001	KN-138
		SU-8001	KN-138C
Boulevard C50 Black	800	SU-8001	KN-138
		SU-8001	KN-138C
Boulevard C50 Limited Edition	800	SU-8001	KN-138
		SU-8001	KN-138C
Boulevard C50 Volusia	800		KN-138
			KN-138C
Boulevard C50T	800	SU-8001	KN-138
		SU-8001	KN-138C
Boulevard C90	1500	SU-1598	KN-138
		SU-1598	KN-138C
Boulevard C90 Black	1500	SU-1598	KN-138
		SU-1598	KN-138C
Boulevard C90T	1500	SU-1598	KN-138
		SU-1598	KN-138C
Boulevard M50	800	SU-8005	KN-138
		SU-8005	KN-138C
Boulevard M50 Limited	800	SU-8005	KN-138
		SU-8005	KN-138C
Boulevard M109R	1773	SU-1806	KN-138
		SU-1806	KN-138C
Boulevard M109R Ltd. Ed.	1773	SU-1806	KN-138
		SU-1806	KN-138C
Boulevard S40	650	SU-6595	KN-137
Boulevard S50	800	SU-7086	KN-138
		SU-7086	KN-138C
Boulevard S83	1400	SU-1487	KN-138

Vehicle	Engine Type	Air Filter	Oil Filter
2007 SUZUKI			
Boulevard S83	1400	SU-1487	KN-138C
DL650 V-Strom	650	SU-1002	KN-138
		SU-1002	KN-138C
DL1000 V-Strom	1000	SU-1002	KN-138
		SU-1002	KN-138C
DL1000 V-Strom Touring	1000	SU-1002	KN-138
		SU-1002	KN-138C
DR200SE	200		KN-132
DR650SE	650	SU-6596	KN-137
DRZ125	125	KA-1203	KN-132
DRZ125L	125	KA-1203	KN-132
DRZ250	250	SU-2501	KN-136
DRZ400E	400	SU-4000	KN-139
DRZ400S	400	SU-4000	KN-139
DRZ400SM	400	SU-4000	KN-139
FL125 SDW Address	250		KN-207
Forenza	2.0L L4 F/I	33-2330	HP-1001
Grand Vitara	1.6L L4 F/I	33-2361	
Grand Vitara	1.9L L4 DSL	33-2361	
Grand Vitara	2.0L L4 F/I	33-2361	
Grand Vitara	2.7L V6 F/I	33-2361	HP-1002
GS500	500	SU-5589	KN-133
GS500F	500	SU-5589	KN-133
GS500H	500		KN-133
GSF650 Bandit	650	SU-6505	KN-138
		SU-6505	KN-138C
GSF650 Bandit S	650	SU-6505	KN-138
		SU-6505	KN-138C
GSF1250 Bandit S	1250	SU-6505	KN-138
		SU-6505	KN-138C
GSR600	600	SU-6006	KN-138
		SU-6006	KN-138C
GSX1300BK B-King	1340	SU-1348	KN-138
		SU-1348	KN-138C
GSX1300R Hayabusa	1300	SU-1399	KN-138
		SU-1399	KN-138C
GSX1400	1400	SU-1402	KN-138
		SU-1402	KN-138C
GSXR600	600	SU-7506	KN-138
		SU-7506	KN-138C
GSXR600	600 - Race Specific	SU-7506R	KN-138
GSXR750	750	SU-7506	KN-138
		SU-7506	KN-138C
GSXR750	750 - Race Specific	SU-7506R	KN-138
GSXR1000	1000	SU-1005	KN-138
		SU-1005	KN-138C
GSXR1000	1000 - Race Specific	SU-1005R	KN-138
GZ250	250		KN-136
GZ250 Marauder	250		KN-136
LS650 Boulevard	650		KN-137
LS650 Savage	650		KN-137
LTA400F Eiger Auto 4x4	400	SU-5002	KN-138
		SU-5002	KN-138C
LTA400F Eiger Auto 4x4 Camo	400	SU-5002	KN-138
		SU-5002	KN-138C
LTA400F Eiger Auto 4x4 Hunter X Hunter	400	SU-5002	KN-138
		SU-5002	KN-138C

*Indicates 2 filters required ♦ - Intake kit available - see page 80 Applications updated daily at knfilters.com

Vehicle	Engine Type	Air Filter	Oil Filter
2007 SUZUKI			
LTA450X KingQuad 4x4	450	SU-7005	KN-138
		SU-7005	KN-138C
LTA450X KingQuad 4x4 Camo	450	SU-7005	KN-138
		SU-7005	KN-138C
LTA500F Vinson Auto 4x4	500	SU-5002	KN-138
		SU-5002	KN-138C
LTA500F Vinson Auto 4x4 Camo	500	SU-5002	KN-138
		SU-5002	KN-138C
LTA700X KingQuad 4x4	700	SU-7005	KN-138
		SU-7005	KN-138C
LTA700X KingQuad 4x4 Camo	700	SU-7005	KN-138
		SU-7005	KN-138C
LTF250 Ozark	250	SU-2504	KN-132
LTF400F Eiger 4x4	400	SU-5002	KN-138
		SU-5002	KN-138C
LTF400F Eiger 4x4 Camo	400	SU-5002	KN-138
		SU-5002	KN-138C
LTF500F Vinson 4x4	500	SU-5002	KN-138
		SU-5002	KN-138C
LTF500F Vinson 4x4 Camo	500	SU-5002	KN-138
		SU-5002	KN-138C
LTR450 QuadRacer	450	SU-4506	KN-139
LTZ90 QuadSport	90		KN-131
LTZ250 Quadsport	250	SU-2504	KN-132
LTZ400 Quadsport	400	SU-4002	KN-139
Reno	2.0L L4 F/I	33-2330	HP-1001
RM85	85	SU-8086	
RM85L	85	SU-8086	
RM125	125	YA-2506XD	
RM250	250	YA-2506XD	
RMZ250	250	YA-2506XD	KN-207
RMZ450	450	YA-2506XD	KN-207
SV650	650	SU-6503	KN-138
		SU-6503	KN-138C
SV650A Yoshimura	650	SU-6503	
SV650S	650	SU-6503	KN-138
		SU-6503	KN-138C
SV1000	1000		KN-138
			KN-138C
SV1000S	1000	SU-6503	KN-138
		SU-6503	KN-138C
Swift	1.5L L4 F/I	33-2824	
Swift III	1.3L L4 DSL	33-2952	
Swift III	1.3L L4 F/I - VIN JSA	33-2826 ♦	
Swift III	1.3L L4 F/I - Vin JSM	33-2824 ♦	
Swift III	1.5L L4 F/I	33-2824 ♦	
Swift III	1.6L L4 F/I	33-2824 ♦	HP-1001
Swift Plus	1.6L L4 F/I		HP-1001
SX4	1.5L L4 F/I	33-2954	
SX4	1.6L L4 F/I	33-2954	
SX4	1.9L L4 DSL	33-2399	

Vehicle	Engine Type	Air Filter	Oil Filter
2007 SUZUKI			
SX4	2.0L L4 F/I	33-2371	HP-1003
VL1500LC Intruder	1500	SU-1598	KN-138
		SU-1598	KN-138C
VS800 Intruder	800		KN-138
			KN-138C
VZR1800 Intruder	1800	SU-1806	KN-138
		SU-1806	KN-138C
Wagon R Plus	1.0L L4 F/I	33-2826	
Wagon R Plus	1.2L L4 F/I	33-2826	
XL-7	3.6L V6 F/I	33-2249	HP-1017
2006 SUZUKI			
Aerio	2.3L L4 F/I	33-2282	HP-1003
AN400 Burgman	400	SU-2599	KN-132
AN400 Burgman Type S	400	SU-2599	KN-132
AN650 A Burgman Executive	650		KN-138
			KN-138C
AN650 Burgman	650		KN-138
			KN-138C
AN650 Burgman Executive	650		KN-138
			KN-138C
Boulevard C50	800	SU-8001	KN-138
		SU-8001	KN-138C
Boulevard C50 Black	800	SU-8001	KN-138
		SU-8001	KN-138C
Boulevard C50T	800	SU-8001	KN-138
		SU-8001	KN-138C
Boulevard C90	1500	SU-1598	KN-138
		SU-1598	KN-138C
Boulevard C90 Black	1500	SU-1598	KN-138
		SU-1598	KN-138C
Boulevard C90T	1500	SU-1598	KN-138
		SU-1598	KN-138C
Boulevard M50	800	SU-8005	KN-138
		SU-8005	KN-138C
Boulevard M50 Black	800	SU-8005	KN-138
		SU-8005	KN-138C
Boulevard M109R	1773	SU-1806	KN-138
		SU-1806	KN-138C
Boulevard S40	650	SU-6595	KN-137
Boulevard S50	800	SU-7086	KN-138
		SU-7086	KN-138C
Boulevard S83	1400	SU-1487	KN-138
		SU-1487	KN-138C
DF15EL	15HP		KN-131
DL650 V-Strom	650	SU-1002	KN-138
		SU-1002	KN-138C
DL1000 V-Strom	1000	SU-1002	KN-138
		SU-1002	KN-138C
DR200SE	200		KN-132
DR650SE	650	SU-6596	KN-137
DRZ125	125	KA-1203	KN-132
DRZ125L	125	KA-1203	KN-132
DRZ250	250	SU-2501	KN-136
DRZ400E	400	SU-4000	KN-139
DRZ400S	400	SU-4000	KN-139
DRZ400SM	400	SU-4000	KN-139
Forenza	2.0L L4 F/I	33-2330	HP-1001
Grand Vitara	1.6L L4 F/I	33-2361	
Grand Vitara	1.9L L4 DSL	33-2361	

*Indicates 2 filters required ♦ - Intake kit available - see page 80 Applications updated daily at knfilters.com

Vehicle	Engine Type	Air Filter	Oil Filter
2006 SUZUKI			
Grand Vitara	2.0L L4 F/I	33-2361	
Grand Vitara	2.7L V6 F/I	33-2361	HP-1002
GS500	500	SU-5589	KN-133
GS500F	500	SU-5589	KN-133
GSF650 Bandit	650	SU-6505	KN-138
		SU-6505	KN-138C
GSF650 Bandit S	650	SU-6505	KN-138
		SU-6505	KN-138C
GSF1200 Bandit	1200	SU-6505	KN-138
		SU-6505	KN-138C
GSF1200 Bandit S	1200	SU-6505	KN-138
		SU-6505	KN-138C
GSR600	600	SU-6006	KN-138
		SU-6006	KN-138C
GSX600F Katana	600	SU-7592	KN-138
		SU-7592	KN-138C
GSX750F Katana	750	SU-7592	KN-138
		SU-7592	KN-138C
GSX1300R Hayabusa	1300	SU-1399	KN-138
		SU-1399	KN-138C
GSX1400	1400	SU-1402	KN-138
		SU-1402	KN-138C
GSXR600	600	SU-7506	KN-138
		SU-7506	KN-138C
GSXR600	600 - Race Specific	SU-7506R	KN-138
GSXR750	750	SU-7506	KN-138
		SU-7506	KN-138C
GSXR750	750 - Race Specific	SU-7506R	KN-138
GSXR1000	1000	SU-1005	KN-138
		SU-1005	KN-138C
GSXR1000	1000 - Race Specific	SU-1005R	KN-138
GZ250 Marauder	250		KN-136
Jimny	1.3L L4 F/I	33-2162	
LS650 Boulevard	650		KN-137
LS650 Savage	650		KN-137
LT80 Quadsport	80	SU-8087	
LTA400F Eiger Auto 4x4	400	SU-5002	KN-138
		SU-5002	KN-138C
LTA400F Eiger Auto 4x4 Camo	400	SU-5002	KN-138
		SU-5002	KN-138C
LTA500F Vinson Auto 4x4	500	SU-5002	KN-138
		SU-5002	KN-138C
LTA500F Vinson Auto 4x4 Camo	500	SU-5002	KN-138
		SU-5002	KN-138C
LTA700X KingQuad 4x4	700	SU-7005	KN-138
		SU-7005	KN-138C
LTA700X KingQuad 4x4 Camo	700	SU-7005	KN-138
		SU-7005	KN-138C
LTF250 Ozark	250	SU-2504	KN-132
LTF400F Eiger 4x4	400	SU-5002	KN-138
		SU-5002	KN-138C
LTF400F Eiger 4x4 Camo	400	SU-5002	KN-138
		SU-5002	KN-138C

Vehicle	Engine Type	Air Filter	Oil Filter
2006 SUZUKI			
LTF500F Vinson 4x4	500	SU-5002	KN-138
		SU-5002	KN-138C
LTF500F Vinson 4x4 Camo	500	SU-5002	KN-138
		SU-5002	KN-138C
LTR450 QuadRacer	450	SU-4506	KN-139
LTV700 Twin Peaks 4x4	700		KN-204
			KN-204C
LTZ250 Quadsport	250	SU-2504	KN-132
LTZ400 Quadsport	400	SU-4002	KN-139
Reno	2.0L L4 F/I	33-2330	HP-1001
RM85	85	SU-8086	
RM85L	85	SU-8086	
RM125	125	YA-2506XD	
RM250	250	YA-2506XD	
RMZ250	250	KA-2504	KN-207
RMZ450	450	YA-2506XD	KN-207
SV650	650	SU-6503	KN-138
		SU-6503	KN-138C
SV650S	650	SU-6503	KN-138
		SU-6503	KN-138C
SV1000	1000		KN-138
			KN-138C
SV1000S	1000	SU-6503	KN-138
		SU-6503	KN-138C
Swift III	1.3L L4 DSL	33-2952	
Swift III	1.3L L4 F/I - VIN JSA	33-2826 ♦	
Swift III	1.3L L4 F/I - Vin JSM	33-2824 ♦	
Swift III	1.5L L4 F/I	33-2824 ♦	
Swift III	1.6L L4 F/I	33-2824 ♦	HP-1001
Swift Plus	1.6L L4 F/I		HP-1001
VL1500LC Intruder	1500		KN-138
			KN-138C
VS800 Intruder	800		KN-138
			KN-138C
VS1400GLP Intruder	1400		KN-138
			KN-138C
VZR1800 Intruder	1800	SU-1806	KN-138
		SU-1806	KN-138C
Wagon R Plus	1.0L L4 F/I	33-2826	
Wagon R Plus	1.2L L4 F/I	33-2826	
XL-7	2.7L V6 F/I	33-2327	HP-1002
2005 SUZUKI			
Aerio	2.3L L4 F/I	33-2282	HP-1003
AN250 Burgman	250		KN-132
AN400 Burgman	400	SU-2599	KN-132
AN400 Burgman Type S	400	SU-2599	KN-132
AN650 A Burgman Executive	650		KN-138
			KN-138C
AN650 Burgman	650		KN-138
			KN-138C
AN650 Burgman Executive	650		KN-138
			KN-138C
Boulevard C50	800	SU-8001	KN-138
		SU-8001	KN-138C
Boulevard C50 Black	800	SU-8001	KN-138
		SU-8001	KN-138C

*Indicates 2 filters required ♦ - Intake kit available - see page 80 Applications updated daily at knfilters.com

2005 SUZUKI

Vehicle	Engine Type	Air Filter	Oil Filter
Boulevard C50T	800	SU-8001	KN-138
		SU-8001	KN-138C
Boulevard C90	1500	SU-1598	KN-138
		SU-1598	KN-138C
Boulevard C90 Black	1500	SU-1598	KN-138
		SU-1598	KN-138C
Boulevard C90T	1500	SU-1598	KN-138
		SU-1598	KN-138C
Boulevard M50	800	SU-8005	KN-138
		SU-8005	KN-138C
Boulevard M50 Black	800	SU-8005	KN-138
		SU-8005	KN-138C
Boulevard M95	1600	KA-1596	KN-204
		KA-1596	KN-204C
Boulevard S40	650	SU-6595	KN-137
Boulevard S50	800	SU-7086	KN-138
		SU-7086	KN-138C
Boulevard S83	1400	SU-1487	KN-138
		SU-1487	KN-138C
DL650 V-Strom	650	SU-1002	KN-138
		SU-1002	KN-138C
DL1000 V-Strom	1000	SU-1002	KN-138
		SU-1002	KN-138C
DR200SE	200		KN-132
DR650SE	650	SU-6596	KN-137
DRZ110	110	KA-1102	KN-112
DRZ125	125	KA-1203	KN-132
DRZ125L	125	KA-1203	KN-132
DRZ250	250	SU-2501	KN-136
DRZ400E	400	SU-4000	KN-139
DRZ400S	400	SU-4000	KN-139
DRZ400SM	400	SU-4000	KN-139
Forenza	2.0L L4 F/I	33-2330	HP-1001
Grand Vitara	2.5L V6 F/I	33-2155	HP-1002
Grand Vitara	2.7L V6 F/I - from 10/05	33-2361	
Grand Vitara	2.7L V6 F/I - to 9/05	33-2155	
GS500	500	SU-5589	KN-133
GS500F	500	SU-5589	KN-133
GSF650 Bandit	650	SU-6505	KN-138
		SU-6505	KN-138C
GSF650 Bandit S	650	SU-6505	KN-138
		SU-6505	KN-138C
GSF1200 Bandit	1200		KN-138
			KN-138C
GSF1200 Bandit S	1200	SU-6000	KN-138
		SU-6000	KN-138C
GSX600F Katana	600	SU-7592	KN-138
		SU-7592	KN-138C
GSX750F Katana	750	SU-7592	KN-138
		SU-7592	KN-138C
GSX1300R Hayabusa	1300	SU-1399	KN-138
		SU-1399	KN-138C
GSX1400	1400	SU-1402	KN-138
		SU-1402	KN-138C
GSXR600	600	SU-7504	KN-138
		SU-7504	KN-138C
GSXR750	750	SU-7504	KN-138
		SU-7504	KN-138C
GSXR1000	1000	SU-1005	KN-138
		SU-1005	KN-138C
GSXR1000	1000 - Race Specific	SU-1005R	KN-138
GZ250 Marauder	250		KN-136
LS650 Boulevard	650		KN-137

2005 SUZUKI

Vehicle	Engine Type	Air Filter	Oil Filter
LS650 Savage	650		KN-137
LT80 Quadsport	80	SU-8087	
LTA400F Eiger Auto 4x4	400	SU-5002	KN-138
		SU-5002	KN-138C
LTA400F Eiger Auto 4x4 Camo	400	SU-5002	KN-138
		SU-5002	KN-138C
LTA500B Vinson Auto 4x4 Ltd.	500	SU-5002	KN-138
		SU-5002	KN-138C
LTA500F Vinson Auto 4x4	500	SU-5002	KN-138
		SU-5002	KN-138C
LTA500F Vinson Auto 4x4 Camo	500	SU-5002	KN-138
		SU-5002	KN-138C
LTA700X KingQuad 4x4	700	SU-7005	KN-138
		SU-7005	KN-138C
LTF250 Ozark	250	SU-2504	KN-132
LTF400F Eiger 4x4	400	SU-5002	KN-138
		SU-5002	KN-138C
LTF400F Eiger 4x4 Camo	400	SU-5002	KN-138
		SU-5002	KN-138C
LTF500F Vinson 4x4	500	SU-5002	KN-138
		SU-5002	KN-138C
LTF500F Vinson 4x4 Camo	500	SU-5002	KN-138
		SU-5002	KN-138C
LTV700 Twin Peaks 4x4	700	KA-6503	KN-204
		KA-6503	KN-204C
LTZ250 Quadsport	250	SU-2504	KN-132
LTZ400 Quadsport	400	SU-4002	KN-139
M800 Intruder	800		KN-138
			KN-138C
Reno	2.0L L4 F/I	33-2330	HP-1001
RM65	65	KA-8088	
RM85	85	SU-8086	
RM85L	85	SU-8086	
RMZ250	250	KA-2504	KN-207
RMZ450	450	YA-2506XD	KN-207
SV650	650	SU-6503	KN-138
		SU-6503	KN-138C
SV650S	650	SU-6503	KN-138
		SU-6503	KN-138C
SV1000	1000		KN-138
			KN-138C
SV1000S	1000	SU-6503	KN-138
		SU-6503	KN-138C
Swift III	1.3L L4 DSL	33-2952	
Swift III	1.3L L4 F/I - VIN JSA	33-2826 ♦	
Swift III	1.3L L4 F/I - Vin JSM	33-2824 ♦	
Swift III	1.5L L4 F/I	33-2824 ♦	
Verona	2.5L L6 F/I	33-2325	
VL1500LC Intruder	1500	SU-1598	KN-138
		SU-1598	KN-138C

*Indicates 2 filters required ♦ - Intake kit available - see page 80 Applications updated daily at knfilters.com

Vehicle	Engine Type	Air Filter	Oil Filter
2005 SUZUKI			
VS800 Intruder	800		KN-138
			KN-138C
VS1400GLP Intruder	1400		KN-138
			KN-138C
Wagon R Plus	1.0L L4 F/I	33-2826	
XL-7	2.7L V6 F/I	33-2327	HP-1002
2004 SUZUKI			
Aerio	2.3L L4 F/I	33-2282	HP-1003
Alto IV	1.1L L4 F/I	33-2826	
AN400 Burgman	400	SU-2599	KN-132
AN650 Burgman	650		KN-138
			KN-138C
AN650 Burgman Executive	650		KN-138
			KN-138C
DL650 V-Strom	650	SU-1002	KN-138
		SU-1002	KN-138C
DL1000 V-Strom	1000	SU-1002	KN-138
		SU-1002	KN-138C
DL1000 V-Strom GT	1000	SU-1002	KN-138
		SU-1002	KN-138C
DR200SE	200		KN-132
DR650SE	650	SU-6596	KN-137
DRZ125	125	KA-1203	KN-132
DRZ125L	125	KA-1203	KN-132
DRZ250	250	SU-2501	KN-136
DRZ400E	400	SU-4000	KN-139
DRZ400S	400	SU-4000	KN-139
Forenza	2.0L L4 F/I		HP-1001
Grand Vitara	2.5L V6 F/I	33-2155	HP-1002
Grand Vitara	2.7L V6 F/I	33-2155	
GS500	500	SU-5589	KN-133
GS500F	500	SU-5589	KN-133
GSF600 Bandit S	600	SU-6000	KN-138
		SU-6000	KN-138C
GSF1200 Bandit	1200		KN-138
			KN-138C
GSF1200 Bandit S	1200	SU-6000	KN-138
		SU-6000	KN-138C
GSX600F Katana	600	SU-7592	KN-138
		SU-7592	KN-138C
GSX750F Katana	750	SU-7592	KN-138
		SU-7592	KN-138C
GSX1300R Hayabusa	1300	SU-1399	KN-138
		SU-1399	KN-138C
GSXR600	600	SU-7504	KN-138
		SU-7504	KN-138C
GSXR750	750	SU-7504	KN-138
		SU-7504	KN-138C
GSXR1000	1000	SU-7500	KN-138
		SU-7500	KN-138C
GZ250 Marauder	250		KN-136
LS650 Savage	650	SU-6595	KN-137
LT80 Quadsport	80	SU-8087	
LT160 Quadsport	160	SU-1691	KN-132
LTA400 Eiger Auto 2x4	400	SU-5002	KN-138
		SU-5002	KN-138C
LTA400F Eiger Auto 4x4	400	SU-5002	KN-138
		SU-5002	KN-138C

Vehicle	Engine Type	Air Filter	Oil Filter
2004 SUZUKI			
LTA400F Eiger Auto 4x4 Camo	400	SU-5002	KN-138
		SU-5002	KN-138C
LTA500F Vinson Auto 4x4	500	SU-5002	KN-138
		SU-5002	KN-138C
LTA500F Vinson Auto 4x4 Camo	500	SU-5002	KN-138
		SU-5002	KN-138C
LTF250 Ozark	250	SU-2504	KN-132
LTF400 Eiger 2x4	400	SU-5002	KN-138
		SU-5002	KN-138C
LTF400F Eiger 4x4	400	SU-5002	KN-138
		SU-5002	KN-138C
LTF500F Vinson 4x4	500	SU-5002	KN-138
		SU-5002	KN-138C
LTV700 Twin Peaks 4x4	700	KA-6503	KN-204
		KA-6503	KN-204C
LTZ250 Quadsport	250	SU-2504	KN-132
LTZ400 Quadsport	400	SU-4002	KN-139
RM85	85	SU-8086	
RM85L	85	SU-8086	
RM250	250	SU-2596	
RMZ250	250	KA-2504	KN-207
SV650	650	SU-6503	KN-138
		SU-6503	KN-138C
SV650S	650	SU-6503	KN-138
		SU-6503	KN-138C
SV1000	1000	SU-6503	KN-138
		SU-6503	KN-138C
SV1000S	1000	SU-6503	KN-138
		SU-6503	KN-138C
Verona	2.5L L6 F/I	33-2325	
Vitara	2.5L V6 F/I	33-2155	HP-1002
VL800LC Intruder Volusia	800	SU-8001	KN-138
		SU-8001	KN-138C
VL1500LC Intruder	1500	SU-1598	KN-138
		SU-1598	KN-138C
VS800 Intruder	800	SU-7086	KN-138
		SU-7086	KN-138C
VS1400GLP Intruder	1400	SU-1487	KN-138
		SU-1487	KN-138C
VZ800 Marauder	800		KN-138
			KN-138C
VZ800 Marauder	800 - Jet kit required, purchase separately	SU-5589*	KN-138
VZ1600 Marauder	1600	KA-1596	KN-204
		KA-1596	KN-204C
Wagon R Plus	1.2L L4 F/I	33-2826	
XL-7	2.7L V6 F/I	33-2327	HP-1002
2003 SUZUKI			
Aerio	2.0L L4 F/I		HP-1003
Alto IV	1.1L L4 F/I	33-2826	
AN400 Burgman	400	SU-2599	KN-132
AN650 Burgman	650		KN-138
			KN-138C
DL1000 V-Strom	1000	SU-1002	KN-138
		SU-1002	KN-138C
DR200SE	200		KN-132

Vehicle	Engine Type	Air Filter	Oil Filter
2003 SUZUKI			
DR650SE	650	SU-6596	KN-137
DRZ110	110	KA-1102	KN-112
DRZ125	125	KA-1203	KN-132
DRZ125L	125	KA-1203	KN-132
DRZ250	250	SU-2501	KN-136
DRZ400	400	SU-4000	KN-139
DRZ400E	400	SU-4000	KN-139
DRZ400S	400	SU-4000	KN-139
Grand Vitara	1.6L L4 F/I	33-2155	
Grand Vitara	2.0L L4 DSL	33-2155	
Grand Vitara	2.0L L4 F/I	33-2155	
Grand Vitara	2.5L V6 F/I	33-2155	HP-1002
Grand Vitara	2.7L V6 F/I	33-2155	
GS500	500	SU-5589	KN-133
GSF600 Bandit	600	SU-6000	KN-138
		SU-6000	KN-138C
GSF600 Bandit S	600	SU-6000	KN-138
		SU-6000	KN-138C
GSF1200 Bandit	1200	SU-6000	KN-138
		SU-6000	KN-138C
GSF1200 Bandit S	1200	SU-6000	KN-138
		SU-6000	KN-138C
GSX600F Katana	600	SU-7592	KN-138
		SU-7592	KN-138C
GSX750F Katana	750	SU-7592	KN-138
		SU-7592	KN-138C
GSX1300R Hayabusa	1300	SU-1399	KN-138
		SU-1399	KN-138C
GSX1400	1400	SU-1402	KN-138
		SU-1402	KN-138C
GSXR600	600	SU-7500	KN-138
		SU-7500	KN-138C
GSXR750	750	SU-7500	KN-138
		SU-7500	KN-138C
GSXR1000	1000	SU-7500	KN-138
		SU-7500	KN-138C
GZ250 Marauder	250		KN-136
LS650 Savage	650	SU-6595	KN-137
LT80 Quadsport	80	SU-8087	
LT160 Quadrunner	160	SU-1691	KN-132
LTA400 Eiger Auto 2x4	400	SU-5002	KN-138
		SU-5002	KN-138C
LTA400F Eiger Auto 4x4	400	SU-5002	KN-138
		SU-5002	KN-138C
LTA500F Vinson Auto 4x4	500	SU-5002	KN-138
		SU-5002	KN-138C
LTF250 Ozark	250	SU-2504	KN-132
LTF400F Eiger 4x4	400	SU-5002	KN-138
		SU-5002	KN-138C
LTF500F Vinson 4x4	500	SU-5002	KN-138
		SU-5002	KN-138C
LTZ400 Quadsport	400	SU-4002	KN-139
RM85	85	SU-8086	
RM85L	85	SU-8086	
RM250	250	SU-2596	
SV650	650	SU-6503	KN-138
		SU-6503	KN-138C
SV650S	650	SU-6503	KN-138
		SU-6503	KN-138C

Vehicle	Engine Type	Air Filter	Oil Filter
2003 SUZUKI			
SV1000	1000	SU-6503	KN-138
		SU-6503	KN-138C
SV1000S	1000	SU-6503	KN-138
		SU-6503	KN-138C
TL1000R	1000	SU-0015	KN-138
		SU-0015	KN-138C
Vitara	2.0L L4 F/I	33-2155	HP-1003
VL800LC Intruder Volusia	800	SU-8001	KN-138
		SU-8001	KN-138C
VL1500LC Intruder	1500	SU-1598	KN-138
		SU-1598	KN-138C
VS800 Intruder	800	SU-7086	KN-138
		SU-7086	KN-138C
VS1400GLP Intruder	1400	SU-1487	KN-138
		SU-1487	KN-138C
VZ800 Marauder	800		KN-138
			KN-138C
VZ800 Marauder	800 - Jet kit required, purchase separately	SU-5589*	KN-138
Wagon R Plus	1.0L L4 F/I	33-2826	
XL-7	2.7L V6 F/I	33-2155	HP-1002
2002 SUZUKI			
Aerio	2.0L L4 F/I	33-2258♦	HP-1003
Alto III	1.0L L4 F/I	33-2709	
Alto IV	1.1L L4 F/I	33-2826	
Baleno	1.8L L4 F/I	33-2790	
DL1000 V-Strom	1000	SU-1002	KN-138
		SU-1002	KN-138C
DR200SE	200		KN-132
DR650SE	650	SU-6596	KN-137
DRZ250	250	SU-2501	KN-136
DRZ400	400	SU-4000	KN-139
DRZ400E	400	SU-4000	KN-139
DRZ400S	400	SU-4000	KN-139
Esteem	1.8L L4 F/I	33-2162	HP-1003
Grand Vitara	1.6L L4 F/I	33-2155	
Grand Vitara	2.0L L4 DSL	33-2155	
Grand Vitara	2.0L L4 F/I	33-2155	
Grand Vitara	2.5L V6 F/I	33-2155	HP-1002
Grand Vitara	2.7L V6 F/I	33-2155	
GS500	500	SU-5589	KN-133
GS500E	500		KN-133
GSF600 Bandit	600	SU-6000	KN-138
		SU-6000	KN-138C
GSF600 Bandit S	600	SU-6000	KN-138
		SU-6000	KN-138C
GSF1200 Bandit	1200	SU-6000	KN-138
		SU-6000	KN-138C
GSF1200 Bandit S	1200	SU-6000	KN-138
		SU-6000	KN-138C
GSX600F Katana	600	SU-7592	KN-138
		SU-7592	KN-138C
GSX750	750		KN-137
GSX750 Retro	750		KN-138
			KN-138C
GSX750F Katana	750	SU-7592	KN-138
		SU-7592	KN-138C
GSX1300R Hayabusa	1300	SU-1399	KN-138
		SU-1399	KN-138C
GSX1400	1400	SU-1402	KN-138
		SU-1402	KN-138C
GSXR600	600	SU-7500	KN-138

*Indicates 2 filters required ♦ - Intake kit available - see page 80 Applications updated daily at knfilters.com

Vehicle	Engine Type	Air Filter	Oil Filter
2002 SUZUKI			
GSXR600	600	SU-7500	KN-138C
GSXR750	750	SU-7500	KN-138
		SU-7500	KN-138C
GSXR1000	1000	SU-7500	KN-138
		SU-7500	KN-138C
GZ250 Marauder	250		KN-136
Jimny	1.3L L4 F/I	33-2162	
LS650 Savage	650	SU-6595	KN-137
LT80 Quadsport	80	SU-8087	
LTA400 Eiger Auto 2x4	400	SU-5002	KN-138
		SU-5002	KN-138C
LTA400F Eiger Auto 4x4	400	SU-5002	KN-138
		SU-5002	KN-138C
LTA500F Vinson Auto 4x4	500	SU-5002	KN-138
		SU-5002	KN-138C
LTF250 Ozark	250	SU-2504	KN-132
LTF250 Quadrunner 4x4	250	SU-2588	KN-132
LTF300 King Quad	300	SU-2588	KN-132
LTF400 Eiger 2x4	400	SU-5002	KN-138
		SU-5002	KN-138C
LTF400F Eiger 4x4	400	SU-5002	KN-138
		SU-5002	KN-138C
LTF500F Quadrunner	500	SU-5098	KN-138
		SU-5098	KN-138C
LTF500F Vinson 4x4	500		KN-138
			KN-138C
RM85	85	SU-8086	
RM250	250	SU-2596	
SV650	650	SU-6599	KN-138
		SU-6599	KN-138C
SV650S	650	SU-6599	KN-138
		SU-6599	KN-138C
TL1000R	1000	SU-0015	KN-138
		SU-0015	KN-138C
Vitara	2.0L L4 F/I	33-2155	HP-1003
VL800LC Intruder Volusia	800	SU-8001	KN-138
		SU-8001	KN-138C
VL1500LC Intruder	1500	SU-1598	KN-138
		SU-1598	KN-138C
VS800 Intruder	800	SU-7086	KN-138
		SU-7086	KN-138C
VS1400GLP Intruder	1400	SU-1487	KN-138
		SU-1487	KN-138C
VZ800 Marauder	800		KN-138
			KN-138C
VZ800 Marauder	800 - Jet kit required, purchase separately	SU-5589*	KN-138
XL-7	2.7L V6 F/I	33-2155	HP-1002
2001 SUZUKI			
Alto III	1.0L L4 F/I	33-2709	
DR200SE	200		KN-132
DR650SE	650	SU-6596	KN-137
DRZ250	250	SU-2501	KN-136
DRZ400	400	SU-4000	KN-139
DRZ400E	400	SU-4000	KN-139
DRZ400S	400	SU-4000	KN-139
Esteem	1.8L L4 F/I	33-2162	HP-1003

Vehicle	Engine Type	Air Filter	Oil Filter
2001 SUZUKI			
Grand Vitara	2.0L L4 DSL	33-2155	
Grand Vitara	2.0L L4 F/I	33-2155	
Grand Vitara	2.5L V6 F/I	33-2155	HP-1002
Grand Vitara	2.7L V6 F/I	33-2155	HP-1002
GS500	500	SU-5589	KN-133
GS500E	500		KN-133
GSF600 Bandit	600	SU-6000	KN-138
		SU-6000	KN-138C
GSF600 Bandit S	600	SU-6000	KN-138
		SU-6000	KN-138C
GSF1200 Bandit	1200	SU-6000	KN-138
		SU-6000	KN-138C
GSF1200 Bandit S	1200	SU-6000	KN-138
		SU-6000	KN-138C
GSX600F Katana	600	SU-7592	KN-138
		SU-7592	KN-138C
GSX750	750		KN-137
GSX750 Retro	750		KN-138
			KN-138C
GSX750F Katana	750	SU-7592	KN-138
		SU-7592	KN-138C
GSX1300R Hayabusa	1300	SU-1399	KN-138
		SU-1399	KN-138C
GSX1400	1400	SU-1402	KN-138
		SU-1402	KN-138C
GSXR600	600	SU-7500	KN-138
		SU-7500	KN-138C
GSXR750	750	SU-7500	KN-138
		SU-7500	KN-138C
GSXR1000	1000	SU-7500	KN-138
		SU-7500	KN-138C
GZ250 Marauder	250		KN-136
Jimny	1.3L L4 F/I	33-2162	
LS650 Savage	650	SU-6595	KN-137
LT80 Quadsport	80	SU-8087	
LTA500 Quadmaster	500	SU-5098	KN-138
		SU-5098	KN-138C
LTF160 Quadrunner	160	SU-1691	KN-132
LTF250 Quadrunner 2x4	250	SU-2588	KN-132
LTF300 King Quad	300	SU-2588	KN-132
LTF500F Quadrunner	500	SU-5098	KN-138
		SU-5098	KN-138C
RM80	79	SU-8086	
RM250	250	SU-2596	
SV650	650	SU-6599	KN-138
		SU-6599	KN-138C
SV650S	650	SU-6599	KN-138
		SU-6599	KN-138C
Swift	1.3L L4 F/I	E-9132	HP-1003
Swift II	1.0L L3 F/I - Exc., 50BHP	E-9209	
Swift II	1.3L L4 F/I		HP-1003
Swift II	1.3L L4 F/I - 101BHP	E-9132	HP-1003
		E-9193	HP-1003
Swift II	1.3L L4 F/I - Exc., 101BHP	E-9209	HP-1003
Swift II	1.6L L4 F/I	E-9209	
TL1000R	1000	SU-0015	KN-138
		SU-0015	KN-138C
TL1000S	1000	SU-0007-A	KN-138
		SU-0007-A	KN-138C
Vitara	2.0L L4 F/I	33-2155	HP-1003
VL800LC Intruder Volusia	800	SU-8001	KN-138

*Indicates 2 filters required ♦ - Intake kit available - see page 80 Applications updated daily at knfilters.com

Vehicle	Engine Type	Air Filter	Oil Filter
2001 SUZUKI			
VL800LC Intruder Volusia	800	SU-8001	KN-138C
VL1500LC Intruder	1500	SU-1598	KN-138
		SU-1598	KN-138C
VS800 Intruder	800	SU-7086	KN-138
		SU-7086	KN-138C
VS1400GLP Intruder	1400	SU-1487	KN-138
		SU-1487	KN-138C
VZ800 Marauder	800		KN-138
			KN-138C
VZ800 Marauder	800 - Jet kit required, purchase separately	SU-5589*	KN-138
Wagon R Plus	1.0L L4 F/I	33-2826	
Wagon R Plus	1.2L L4 F/I	33-2826	
Wagon R Plus	1.3L L4 F/I	33-2242	
2000 SUZUKI			
Alto III	1.0L L4 F/I	33-2709	
Baleno	1.6L L4 F/I	33-2790	
DR200SE	200		KN-132
DR350SE	350		KN-136
DR650SE	650	SU-6596	KN-137
DRZ400	400	SU-4000	KN-139
DRZ400E	400	SU-4000	KN-139
DRZ400S	400	SU-4000	KN-139
Esteem	1.6L L4 F/I	33-2162	HP-1002
Esteem	1.8L L4 F/I	33-2162	HP-1003
Grand Vitara	2.0L L4 DSL	33-2155	
Grand Vitara	2.0L L4 F/I	33-2155	
Grand Vitara	2.5L V6 F/I	33-2155	HP-1002
GS500E	500	SU-5589	KN-133
GSF600 Bandit	600	SU-6000	KN-138
		SU-6000	KN-138C
GSF600 Bandit S	600	SU-6000	KN-138
		SU-6000	KN-138C
GSF1200 Bandit	1200		KN-138
			KN-138C
GSF1200 Bandit S	1200	SU-7593	KN-138
		SU-7593	KN-138C
GSX600F Katana	600	SU-7592	KN-138
		SU-7592	KN-138C
GSX750F Katana	750	SU-7592	KN-138
		SU-7592	KN-138C
GSX1300R Hayabusa	1300	SU-1399	KN-138
		SU-1399	KN-138C
GSXR600	600	SU-7596	KN-138
		SU-7596	KN-138C
GSXR750	750	SU-7500	KN-138
		SU-7500	KN-138C
GZ250 Marauder	250		KN-136
LS650 Savage	650	SU-6595	KN-137
LT80 Quadsport	80	SU-8087	
LTA500 Quadmaster	500	SU-5098	KN-138
		SU-5098	KN-138C
LTF250 Quadrunner 4x4	250	SU-2588	KN-132
LTF300 King Quad	300	SU-2588	KN-132
LTF500F Quadrunner	500	SU-5098	KN-138
		SU-5098	KN-138C
RM80	79	SU-8086	
RM125	125	SU-2596	
RM250	250	SU-2596	
SV650	650	SU-6599	KN-138
		SU-6599	KN-138C
SV650S	650	SU-6599	KN-138

Vehicle	Engine Type	Air Filter	Oil Filter
2000 SUZUKI			
SV650S	650	SU-6599	KN-138C
Swift II	1.3L L4 F/I - Exc., 101BHP	E-9209	
TL1000R	1000	SU-0015	KN-138
		SU-0015	KN-138C
TL1000S	1000	SU-0007-A	KN-138
		SU-0007-A	KN-138C
Vitara	2.0L L4 F/I	33-2155	HP-1003
VL1500LC Intruder	1500	SU-1598	KN-138
		SU-1598	KN-138C
VS800 Intruder	800	SU-7086	KN-138
		SU-7086	KN-138C
VS1400GLP Intruder	1400	SU-1487	KN-138
		SU-1487	KN-138C
VZ800 Marauder	800		KN-138
			KN-138C
VZ800 Marauder	800 - Jet kit required, purchase separately	SU-5589*	KN-138
1999 SUZUKI			
Baleno	1.6L L4 F/I	33-2790	
Baleno	1.8L L4 F/I	33-2790	
DR350	350	SU-3590	KN-136
DR350SE	350	SU-3590	KN-136
DR650SE	650	SU-6596	KN-137
Esteem	1.6L L4 F/I	33-2162	HP-1002
Esteem	1.8L L4 F/I	33-2162	HP-1002
Grand Vitara	1.6L L4 F/I	33-2155	
Grand Vitara	2.0L L4 DSL	33-2155	
Grand Vitara	2.0L L4 F/I	33-2155	
Grand Vitara	2.5L V6 F/I	33-2155	HP-1002
GS500E	500	SU-5589	KN-133
GSF600 Bandit S	600	SU-7593	KN-138
		SU-7593	KN-138C
GSF1200 Bandit S	1200	SU-7593	KN-138
		SU-7593	KN-138C
GSX600F Katana	600	SU-7592	KN-138
		SU-7592	KN-138C
GSX750 Retro	750	SU-5589	KN-138
		SU-5589	KN-138C
GSX750F Katana	750	SU-7592	KN-138
		SU-7592	KN-138C
GSX1300R Hayabusa	1300	SU-1399	KN-138
		SU-1399	KN-138C
GSXR600	600	SU-7596	KN-138
		SU-7596	KN-138C
GSXR750	750	SU-7596	KN-138
		SU-7596	KN-138C
GZ250 Marauder	250		KN-136
Jimny	1.3L L4 F/I	33-2162	
LS650 Savage	650	SU-6595	KN-137
LT80 Quadsport	80	SU-8087	
LTF160 Quadrunner	160	SU-1691	KN-132
LTF250 Quadrunner 2x4	250	SU-2588	KN-132
LTF250 Quadrunner 4x4	250	SU-2588	KN-132
LTF300 King Quad	300	SU-2588	KN-132
LTF500F Quadrunner	500	SU-5098	KN-138
		SU-5098	KN-138C
RM125	125	SU-2596	
RM250	250	SU-2596	
SV650	650	SU-6599	KN-138
		SU-6599	KN-138C
SV650S	650	SU-6599	KN-138
		SU-6599	KN-138C

*Indicates 2 filters required ♦ - Intake kit available - see page 80 Applications updated daily at knfilters.com

Vehicle	Engine Type	Air Filter	Oil Filter
1999 SUZUKI			
Swift	1.3L L4 F/I	E-9132	HP-1002
Swift II	1.3L L4 F/I		HP-1002
Swift II	1.3L L4 F/I - 101BHP	E-9132	HP-1002
		E-9193	HP-1002
Swift II	1.3L L4 F/I - Exc., 101BHP	E-9209	HP-1002
TL1000R	1000	SU-0015	KN-138
		SU-0015	KN-138C
TL1000S	1000	SU-0007-A	KN-138
		SU-0007-A	KN-138C
Vitara	2.0L L4 F/I	33-2155	HP-1003
VL1500LC Intruder	1500	SU-1598	KN-138
		SU-1598	KN-138C
VS800 Intruder	800	SU-7086	KN-138
		SU-7086	KN-138C
VS1400GLP Intruder	1400	SU-1487	KN-138
		SU-1487	KN-138C
VZ800 Marauder	800		KN-138
			KN-138C
VZ800 Marauder	800 - Jet kit required, purchase separately	SU-5589*	KN-138
Wagon R Plus	1.0L L4 F/I	33-2826	
1998 SUZUKI			
DR350	350	SU-3590	KN-136
DR350 Off Road	350		KN-136
DR350SE	350	SU-3590	KN-136
DR650SE	650	SU-6596	KN-137
Esteem	1.6L L4 F/I	33-2162	HP-1002
Grand Vitara	2.5L V6 F/I	33-2155	HP-1002
GS500E	500	SU-5589	KN-133
GSF600 Bandit S	600	SU-7593	KN-138
		SU-7593	KN-138C
GSF1200 Bandit S	1200	SU-7593	KN-138
		SU-7593	KN-138C
GSX600F Katana	600	SU-7592	KN-138
		SU-7592	KN-138C
GSX750F Katana	750	SU-7592	KN-138
		SU-7592	KN-138C
GSXR600	600	SU-7596	KN-138
		SU-7596	KN-138C
GSXR750	750	SU-7596	KN-138
		SU-7596	KN-138C
GSXR1100W	1075	SU-7593	KN-138
		SU-7593	KN-138C
LS650 Savage	650	SU-6595	KN-137
LT80 Quadsport	80	SU-8087	
LTF250 Quadrunner 4x4	250	SU-2588	KN-132
LTF300 King Quad	300	SU-2588	KN-132
LTF500F Quadrunner	500	SU-5098	KN-138
		SU-5098	KN-138C
RM125	125	SU-2596	
Sidekick	1.6L L4 F/I		HP-1002
Sidekick	1.8L L4 F/I		HP-1003
Swift	1.3L L4 F/I	E-9132	HP-1002
Swift II	1.0L L3 F/I - Exc., 50BHP	E-9209	
Swift II	1.3L L4 F/I		HP-1002
Swift II	1.3L L4 F/I - 101BHP	E-9132	HP-1002
		E-9193	HP-1002
Swift II	1.3L L4 F/I - Exc., 101BHP	E-9209	HP-1002
TL1000R	1000	SU-0015	KN-138
		SU-0015	KN-138C
TL1000S	1000	SU-0007-A	KN-138

Vehicle	Engine Type	Air Filter	Oil Filter
1998 SUZUKI			
TL1000S	1000	SU-0007-A	KN-138C
VL1500LC Intruder	1500	SU-1598	KN-138
		SU-1598	KN-138C
VS800 Intruder	800	SU-7086	KN-138
		SU-7086	KN-138C
VS1400GLP Intruder	1400	SU-1487	KN-138
		SU-1487	KN-138C
VZ800 Marauder	800		KN-138
			KN-138C
VZ800 Marauder	800 - Jet kit required, purchase separately	SU-5589*	KN-138
1997 SUZUKI			
Baleno	1.3L L4 F/I	33-2790	
Baleno	1.6L L4 F/I	33-2790	
Baleno	1.8L L4 F/I	33-2790	
DR200SE	200		KN-132
DR350	350	SU-3590	KN-136
DR350 Off Road	350		KN-136
DR350SE	350	SU-3590	KN-136
DR650SE	650	SU-6596	KN-137
Esteem	1.6L L4 F/I	33-2162	HP-1002
GS500E	500	SU-5589	KN-133
GSF600 Bandit	600	SU-7593	KN-138
		SU-7593	KN-138C
GSF600 Bandit S	600	SU-7593	KN-138
		SU-7593	KN-138C
GSF1200 Bandit S	1200	SU-7593	KN-138
		SU-7593	KN-138C
GSX600F Katana	600	SU-7592	KN-138
		SU-7592	KN-138C
GSX750F Katana	750	SU-7592	KN-138
		SU-7592	KN-138C
GSXR600	600	SU-7596	KN-138
		SU-7596	KN-138C
GSXR750	750	SU-7596	KN-138
		SU-7596	KN-138C
GSXR1100W	1075	SU-7593	KN-138
		SU-7593	KN-138C
LS650 Savage	650	SU-6595	KN-137
LT4WD	300		KN-132
LTF160 Quadrunner	160	SU-1691	KN-132
LTF250 Quadrunner 4x4	250	SU-2588	KN-132
LTF300 King Quad	300	SU-2588	KN-132
RF900R	938	SU-9094	KN-138
		SU-9094	KN-138C
RM125	125	SU-2596	
Sidekick	1.6L L4 F/I		HP-1002
Sidekick	1.8L L4 F/I		HP-1003
Super Carry	1.0L L4 F/I	E-9104	
Swift	1.3L L4 F/I	E-9209	HP-1002
Swift II	1.3L L4 F/I		HP-1002
Swift II	1.3L L4 F/I - 101BHP	E-9132	HP-1002
		E-9193	HP-1002
Swift II	1.3L L4 F/I - Exc., 101BHP	E-9209	HP-1002
TL1000S	1000	SU-0007-A	KN-138
		SU-0007-A	KN-138C
VS800 Intruder	800	SU-7086	KN-138
		SU-7086	KN-138C
VS1400GLP Intruder	1400	SU-1487	KN-138
		SU-1487	KN-138C
VZ800 Marauder	800		KN-138
			KN-138C

*Indicates 2 filters required ♦ - Intake kit available - see page 80 Applications updated daily at knfilters.com

Vehicle	Engine Type	Air Filter	Oil Filter
1997 SUZUKI			
VZ800 Marauder	800 - Jet kit required, purchase separately	SU-5589*	KN-138
X-90	1.6L L4 F/I	33-2065	HP-1002
1996 SUZUKI			
DR200SE	200		KN-132
DR350	350	SU-3590	KN-136
DR350 Off Road	350		KN-136
DR350S	350	SU-3590	KN-136
DR650SE	650	SU-6596	KN-137
DR800	778	SU-0006	KN-137
Esteem	1.6L L4 F/I	33-2162	HP-1002
GS500E	500	SU-5589	KN-133
GSF600 Bandit	600	SU-7593	KN-138
		SU-7593	KN-138C
GSF600 Bandit S	600	SU-7593	KN-138
		SU-7593	KN-138C
GSF1200 Bandit S	1200	SU-7593	KN-138
		SU-7593	KN-138C
GSX600F Katana	600	SU-7592	KN-138
		SU-7592	KN-138C
GSX750F Katana	750	SU-7592	KN-138
		SU-7592	KN-138C
GSXR750	750	SU-7596	KN-138
		SU-7596	KN-138C
GSXR1100W	1075	SU-7593	KN-138
		SU-7593	KN-138C
LS650 Savage	650	SU-6595	KN-137
LT4WD	300		KN-132
LT80 Quadsport	80	SU-8087	
LTF250 Quadrunner 4x4	250	SU-2588	KN-132
LTF300 King Quad	300	SU-2588	KN-132
RF600R	580	SU-9094	KN-138
		SU-9094	KN-138C
RF900R	938	SU-9094	KN-138
		SU-9094	KN-138C
RM125	125	SU-2596	
Sidekick	1.6L L4 F/I	33-2065	HP-1002
Sidekick	1.8L L4 F/I		HP-1003
Super Carry	1.0L L4 F/I	E-9104	
Swift	1.3L L4 F/I	E-9209	HP-1002
Swift II	1.3L L4 F/I - 101BHP	E-9132	
		E-9193	
Swift II	1.3L L4 F/I - Exc., 101BHP	E-9209	
VS600GL Intruder	599		KN-138
			KN-138C
VS800 Intruder	800	SU-7086	KN-138
		SU-7086	KN-138C
VS1400GLP Intruder	1400	SU-1487	KN-138
		SU-1487	KN-138C
X-90	1.6L L4 F/I	33-2065	HP-1002
1995 SUZUKI			
DR250SE	250	SU-3590	KN-136
DR250SE Off Road	250		KN-136
DR350	350	SU-3590	KN-136
DR350 Off Road	350		KN-136
DR350S	350	SU-3590	KN-136
DR650S	650	SU-6590	KN-137
Esteem	1.6L L4 F/I	33-2162	HP-1002
GS500E	500	SU-5589	KN-133
GSX600F Katana	600	SU-7592	KN-138
		SU-7592	KN-138C
GSX750F Katana	750	SU-7592	KN-138

Vehicle	Engine Type	Air Filter	Oil Filter
1995 SUZUKI			
GSX750F Katana	750	SU-7592	KN-138C
GSXR750W	750	SU-7593	KN-138
		SU-7593	KN-138C
GSXR1100W	1075	SU-7593	KN-138
		SU-7593	KN-138C
LS650 Savage	650	SU-6595	KN-137
LT4WD	300		KN-132
LTF250 Quadrunner 4x4	250	SU-2588	KN-132
LTF300 King Quad	300	SU-2588	KN-132
RF600R	580	SU-9094	KN-138
		SU-9094	KN-138C
RF900R	938	SU-9094	KN-138
		SU-9094	KN-138C
Samurai	1.3L L4 F/I	E-2553	HP-1002
Sidekick	1.6L L4 MFI	33-2065	HP-1002
Sidekick	1.6L L4 TBI	33-2700	HP-1002
Swift	1.3L L4 F/I	E-9209	HP-1002
Swift II	1.0L L3 F/I - 50BHP	E-9193	
Swift II	1.0L L3 F/I - Exc., 50BHP	E-9209	
Swift II	1.3L L4 F/I		HP-1002
Swift II	1.3L L4 F/I - 101BHP	E-9132	HP-1002
		E-9193	HP-1002
Swift II	1.3L L4 F/I - Exc., 101BHP	E-9209	HP-1002
VS800 Intruder	800	SU-7086	KN-138
		SU-7086	KN-138C
VS1400 Intruder	1400	SU-1487	KN-138
		SU-1487	KN-138C
1994 SUZUKI			
Cappuccino	0.7 L3 F/I	33-2709	
DR125SE Raider	125		KN-132
DR350	350	SU-3590	KN-136
DR350 Off Road	350		KN-136
DR350S	350	SU-3590	KN-136
DR650S	650	SU-6590	KN-137
GS500E	500	SU-5589	KN-133
GSF400 Bandit	399	SU-0008	KN-133
GSX600F Katana	600	SU-7592	KN-138
		SU-7592	KN-138C
GSX750F Katana	750	SU-7592	KN-138
		SU-7592	KN-138C
GSXR750W	750	SU-7593	KN-138
		SU-7593	KN-138C
GSXR1100W	1075	SU-7593	KN-138
		SU-7593	KN-138C
LT80 Quadsport	80	SU-8087	
LTF300 King Quad	300	SU-2588	KN-132
RF600R	580	SU-9094	KN-138
		SU-9094	KN-138C
RF900R	938	SU-9094	KN-138
		SU-9094	KN-138C
Samurai	1.3L L4 F/I	E-2553	HP-1002
Sidekick	1.6L L4 MFI	33-2065	HP-1002
Sidekick	1.6L L4 TBI	33-2700	HP-1002
Super Carry	1.0L L4 F/I	E-9104	
Swift	1.3L L4 F/I		HP-1002
Swift II	1.3L L4 F/I		HP-1002
Swift II	1.3L L4 F/I - 101BHP	E-9132	HP-1002
		E-9193	HP-1002
Swift II	1.3L L4 F/I - Exc., 101BHP	E-9209	HP-1002
Swift II	1.6L L4 F/I	E-9209	
VS800 Intruder	800	SU-7086	KN-138

*Indicates 2 filters required ♦ - Intake kit available - see page 80 Applications updated daily at knfilters.com

Vehicle	Engine Type	Air Filter	Oil Filter
1994 SUZUKI			
VS800 Intruder	800	SU-7086	KN-138C
VS1400 Intruder	1400	SU-1487	KN-138
		SU-1487	KN-138C
1993 SUZUKI			
Alto II	0.8L L3 CARB	E-2570	
DR250SE	250	SU-3590	KN-136
DR250SE Off Road	250		KN-136
DR350	350	SU-3590	KN-136
DR350 Off Road	350		KN-136
DR350S	350	SU-3590	KN-136
DR650S	650	SU-6590	KN-137
GS500E	500	SU-5589	KN-133
GSF400 Bandit	399	SU-0008	KN-133
GSX600F Katana	600	SU-7592	KN-138
		SU-7592	KN-138C
GSX750F Katana	750	SU-7592	KN-138
		SU-7592	KN-138C
GSX1100F Katana	1100	SU-7592	KN-138
		SU-7592	KN-138C
GSX1100G	1118	SU-1191	KN-138
		SU-1191	KN-138C
GSXR600W	600	SU-7593	KN-138
		SU-7593	KN-138C
GSXR750W	750	SU-7593	KN-138
		SU-7593	KN-138C
GSXR1100W	1075	SU-7593	KN-138
		SU-7593	KN-138C
GSXR1100W	1118	SU-7593	KN-138
		SU-7593	KN-138C
LT4WD	300		KN-132
LT80 Quadsport	80	SU-8087	
LT250 Quadrunner 2x4	250	SU-2588	KN-132
LTF250 Quadrunner 4x4	250	SU-2588	KN-132
LTF300 King Quad	300	SU-2588	KN-132
RF600R	580		KN-138
			KN-138C
Samurai	1.3L L4 F/I	E-2553	HP-1002
Sidekick	1.6L L4 MFI	33-2065	HP-1002
Sidekick	1.6L L4 TBI	33-2700	HP-1002
Super Carry	1.0L L4 F/I	E-9104	
Swift	1.3L L4 F/I		HP-1002
Swift II	1.3L L4 F/I		HP-1002
Swift II	1.3L L4 F/I - 101BHP	E-9132	HP-1002
		E-9193	HP-1002
Swift II	1.3L L4 F/I - Exc., 101BHP	E-9209	HP-1002
Swift II	1.6L L4 F/I	E-9209	HP-1002
VS800 Intruder	800	SU-7086	KN-138
		SU-7086	KN-138C
VS1400 Intruder	1400	SU-1487	KN-138
		SU-1487	KN-138C
VX800	801		KN-138
			KN-138C
1992 SUZUKI			
DR250S	250	SU-3590	KN-136
DR350	350	SU-3590	KN-136
DR350 Off Road	350		KN-136
DR350S	350	SU-3590	KN-136
DR650S	650	SU-6590	KN-137
GS500E	500	SU-5589	KN-133
GSF400 Bandit	399	SU-0008	KN-133
GSX600F Katana	600	SU-7592	KN-138

Vehicle	Engine Type	Air Filter	Oil Filter
1992 SUZUKI			
GSX600F Katana	600	SU-7592	KN-138C
GSX750F Katana	750	SU-7592	KN-138
		SU-7592	KN-138C
GSX1100F Katana	1100	SU-7592	KN-138
		SU-7592	KN-138C
GSX1100G	1118	SU-1191	KN-138
		SU-1191	KN-138C
GSXR600W	600	SU-7593	KN-138
		SU-7593	KN-138C
GSXR750	750	SU-7588	KN-138
		SU-7588	KN-138C
GSXR750W	750		KN-138
			KN-138C
GSXR1100	1075	SU-7588	KN-138
		SU-7588	KN-138C
GSXR1100	1118	SU-7588	KN-138
		SU-7588	KN-138C
GSXR1100W	1100		KN-138
			KN-138C
LT230E Quadrunner	230	SU-2391	KN-132
LT250 Quadrunner 2x4	250	SU-2588	KN-132
LT250R Quadracer	250	SU-4250	
LTF300 King Quad	300	SU-2588	KN-132
RM80	79	SU-8086	
Samurai	1.3L L4 F/I	E-2553	HP-1002
Sidekick	1.6L L4 MFI	33-2065	HP-1002
Sidekick	1.6L L4 TBI	33-2700	HP-1002
Swift	1.3L L4 F/I - DOHC	E-9132	
Swift	1.3L L4 F/I - SOHC	E-9209	
Swift II	1.3L L4 F/I - 101BHP	E-9132 ♦	
		E-9193 ♦	
Swift II	1.3L L4 F/I - Exc., 101BHP	E-9209 ♦	
VS800 Intruder	800	SU-7086	KN-138
		SU-7086	KN-138C
VS1400 Intruder	1400	SU-1487	KN-138
		SU-1487	KN-138C
1991 SUZUKI			
DR250S	250	SU-3590	KN-136
DR350	350	SU-3590	KN-136
DR350 Off Road	350		KN-136
DR350S	350	SU-3590	KN-136
DR650S	650	SU-6590	KN-137
GS500E	500	SU-5589	KN-133
GSF400 Bandit	399	SU-0008	KN-133
GSX600F Katana	600	SU-7592	KN-138
		SU-7592	KN-138C
GSX750F Katana	750	SU-7592	KN-138
		SU-7592	KN-138C
GSX1100F Katana	1100	SU-7592	KN-138
		SU-7592	KN-138C
GSX1100G	1118	SU-1191	KN-138
		SU-1191	KN-138C
GSXR750	750	SU-7588	KN-138
		SU-7588	KN-138C
GSXR750 Sling Shot	750		KN-138
			KN-138C
GSXR1100	1075	SU-7588	KN-138
		SU-7588	KN-138C
GSXR1100	1118	SU-7588	KN-138
		SU-7588	KN-138C
LT4WD	300		KN-132
LT80 Quadsport	80	SU-8087	

*Indicates 2 filters required ♦ - Intake kit available - see page 80 Applications updated daily at knfilters.com

Vehicle	Engine Type	Air Filter	Oil Filter
1991 SUZUKI			
LT230E Quadrunner	230	SU-2391	KN-132
LT250R Quadracer	250	SU-4250	
LTF250 Quadrunner 4x4	250	SU-2588	KN-132
LTF300 King Quad	300	SU-2588	KN-132
Samurai	1.3L L4 F/I	E-2553	HP-1002
Sidekick	1.6L L4 F/I	33-2700	HP-1002
Swift	1.3L L4 F/I		HP-1002
Swift II	1.3L L4 F/I		HP-1002
Swift II	1.3L L4 F/I - 101BHP	E-9132 ♦	HP-1002
		E-9193 ♦	HP-1002
Swift II	1.3L L4 F/I - Exc., 101BHP	E-9209 ♦	HP-1002
VS1400 Intruder	1400	SU-1487	KN-138
		SU-1487	KN-138C
VX800	801		KN-138
			KN-138C
1990 SUZUKI			
DR250S	250	SU-3590	KN-136
DR350	350	SU-3590	KN-136
DR350 Off Road	350		KN-136
DR350S	350	SU-3590	KN-136
DR650S	650	SU-6590	KN-137
GS500E	500	SU-5589	KN-133
GSX600F Katana	600	SU-7592	KN-138
		SU-7592	KN-138C
GSX750F Katana	750	SU-7592	KN-138
		SU-7592	KN-138C
GSX1100F Katana	1100	SU-7592	KN-138
		SU-7592	KN-138C
GSXR750	750	SU-7588	KN-138
		SU-7588	KN-138C
GSXR750 Sling Shot	750		KN-138
			KN-138C
GSXR1100	1075	SU-7588	KN-138
		SU-7588	KN-138C
GSXR1100	1118	SU-7588	KN-138
		SU-7588	KN-138C
LT80 Quadsport	80	SU-8087	
LT160E Quadrunner	160	SU-1691	KN-132
LT230E Quadrunner	230	SU-2391	KN-132
LT250 Quadrunner 2x4	250	SU-2588	KN-132
LT250R Quadracer	250	SU-4250	
Samurai	1.3L L4 CARB	E-2553	HP-1002
Samurai	1.3L L4 F/I	E-2553	HP-1002
Sidekick	1.6L L4 F/I	33-2700	HP-1002
Super Carry	1.0L L4 CARB	E-2310	
Vitara	1.6L L4 F/I - 257MM x 206MM	33-2700	
Vitara	1.6L L4 F/I - 284MM x 141MM	33-2654	
Vitara	1.6L L4 F/I - 297MM x 135MM	33-2065	
VS750 Intruder	750	SU-7086	KN-138
		SU-7086	KN-138C
VX800	801		KN-138
			KN-138C
1989 SUZUKI			
GS500E	500	SU-5589	KN-133
GSX600F Katana	600	SU-7592	KN-138
		SU-7592	KN-138C
GSX750F Katana	750	SU-7592	KN-138
		SU-7592	KN-138C
GSX1100F Katana	1100	SU-7592	KN-138

Vehicle	Engine Type	Air Filter	Oil Filter
1989 SUZUKI			
GSX1100F Katana	1100	SU-7592	KN-138C
GSXR750	750	SU-7588	KN-138
		SU-7588	KN-138C
GSXR750 Sling Shot	750		KN-138
			KN-138C
GSXR1100	1100	SU-7588	KN-138
		SU-7588	KN-138C
LT4WD	300		KN-132
LT160E Quadrunner	160	SU-1691	KN-132
LT230E Quadrunner	230	SU-2391	KN-132
LT250 Quadrunner 2x4	250	SU-2588	KN-132
LT250R Quadracer	250	SU-4250	
LT250S	250		KN-132
LT300E	300		KN-132
LTF250 Quadrunner 4x4	250	SU-2588	KN-132
Samurai	1.3L L4 CARB	E-2553	HP-1002
Sidekick	1.6L L4 F/I	33-2700	HP-1002
Swift	1.3L L4 F/I		HP-1002
Swift	1.3L L4 F/I - DOHC	E-9132	HP-1002
Swift	1.3L L4 F/I - SOHC	E-9209	HP-1002
Swift I	1.3L L4 F/I - 101BHP	33-2523 ♦	
Swift I	1.3L L4 F/I - Exc., 101BHP	E-2734 ♦	
Swift II	1.3L L4 F/I		HP-1002
Swift II	1.3L L4 F/I - 101BHP	E-9132 ♦	HP-1002
		E-9193 ♦	HP-1002
Swift II	1.3L L4 F/I - Exc., 101BHP	E-9209 ♦	HP-1002
1988 SUZUKI			
GS450E	450		KN-133
GSX600F Katana	600	SU-7592	KN-138
		SU-7592	KN-138C
GSX1100F Katana	1100	SU-7592	KN-138
		SU-7592	KN-138C
GSXR750	750	SU-7588	KN-138
		SU-7588	KN-138C
GSXR750 Sling Shot	750		KN-138
			KN-138C
GSXR1100	1100	SU-7586	KN-138
		SU-7586	KN-138C
LS650 Savage	650	SU-6595	KN-137
LT4WD	300		KN-132
LT80 Quadsport	80	SU-8087	
LT230E Quadrunner	230	SU-2391	KN-132
LT230S Quadsport	230	SU-4230	KN-132
LT250 Quadrunner 2x4	250	SU-2588	KN-132
LT250R Quadracer	250	SU-4250	
LTF250 Quadrunner 4x4	250	SU-2588	KN-132
Samurai	1.0L L4 CARB	E-9104	
Samurai	1.3L L4 CARB	E-2553	HP-1002
1987 SUZUKI			
GSXR750	750	SU-7586	KN-134
GSXR750F	750		KN-134
GSXR750G	750	SU-7586	KN-134
GSXR750H	750	SU-7586	KN-134
GSXR750HG	750		KN-134
GSXR750R	750		KN-134
GSXR750XH	750		KN-134
GSXR1100	1100	SU-7586	KN-138
		SU-7586	KN-138C
GV1400 Cavalcade	1400		KN-138

*Indicates 2 filters required ♦ - Intake kit available - see page 80 Applications updated daily at knfilters.com

Vehicle	Engine Type	Air Filter	Oil Filter
1987 SUZUKI			
GV1400 Cavalcade	1400		KN-138C
LS650 Savage	650	SU-6595	KN-137
LT4WD	300		KN-132
LT80 Quadsport	80	SU-8087	
LT230E Quadrunner	230	SU-2391	KN-132
LT230G	230		KN-132
LT230S Quadsport	230	SU-4230	KN-132
LT250R Quadracer	250	SU-4250	
Samurai	1.3L L4 CARB	E-2553	HP-1002
Swift I	1.3L L4 F/I - 101BHP	33-2523 ♦	
VS700 Intruder	700	SU-7086	KN-138
		SU-7086	KN-138C
VS750 Intruder	750		KN-138
			KN-138C
VS1400 Intruder	1400	SU-1487	KN-138
		SU-1487	KN-138C
1986 SUZUKI			
DR100	100		KN-131
DR600	600		KN-137
GS450L	450		KN-133
GS550ES	550	SU-5503	KN-133
GS1150E	1150	SU-1284	KN-133
GSX750 Katana	750		KN-133
GSXR750	750	SU-7586	KN-134
GSXR750F	750		KN-134
GSXR750G	750	SU-7586	KN-134
GSXR750H	750	SU-7586	KN-134
GSXR750HG	750		KN-134
GSXR750R	750	SU-7586	KN-134
GSXR750XH	750		KN-134
GSXR1100	1100	SU-7586	KN-138
		SU-7586	KN-138C
GV1200 Madura	1200	SU-5589	KN-134
GV1400 Cavalcade	1400		KN-134
LS650 Savage	650	SU-6595	KN-137
LT185	185		KN-131
LT230E Quadrunner	230		KN-132
LT230G	230	SU-2391	KN-132
LT230S Quadsport	230	SU-4230	KN-132
LT250E	250		KN-132
LT250R Quadracer	250	SU-4250	
Samurai	1.3L L4 CARB	E-2553	HP-1002
SP200	200		KN-132
VS700 Intruder	700	SU-7086	KN-134
VS750	750		KN-134
1985 SUZUKI			
DR100	100		KN-131
DR250S	250		KN-136
GR650	650		KN-133
GS450L	450		KN-133
GS550E	550	SU-5503	KN-133
GS550ES	550	SU-5503	KN-133
GS550L	550	SU-5503	KN-133
GS700E	700	SU-7503	
GS1150E	1150	SU-1284	KN-133
GSX1100E	1100	SU-1284	KN-133
GV700 Madura	700	SU-5589	KN-134
GV1200 Madura	1200	SU-5589	KN-134
LT125	125		KN-131
LT185	185		KN-131
LT230G	230	SU-2391	KN-132
LT230S Quadsport	230	SU-4230	KN-132
LT250E	250		KN-132
1985 SUZUKI			
LT250R Quadracer	250	SU-4250	
Samurai	1.3L L4 CARB	E-2553	HP-1002
1984 SUZUKI			
GSX1100E	1100	SU-1284	KN-133
LT185	185		KN-131
SJ410	1.0L L4 CARB	E-9104	HP-1002
1983 SUZUKI			
ALT125	125		KN-131
DR100	100		KN-131
GN250	250		KN-136
GR650 Tempter	650		KN-133
GR650X Tempter	650		KN-133
GS550E	550	SU-5503	KN-133
GS550ES	550	SU-5503	KN-133
GS550ES3	550	SU-5503	KN-133
GS550L	550	SU-5503	KN-133
GS650G	650		KN-133
GS650GL	650		KN-133
GS650M Katana	650		KN-133
GS750E	750	SU-7503	KN-133
GS750ES	750	SU-7503	KN-133
GS850G	850	SU-1200	KN-133
GS850GL	850	SU-1200	KN-133
GS1100E	1100	SU-1250	KN-133
GS1100GK	1100	SU-1200	KN-133
GS1100GL	1100	SU-1200	KN-133
GSX1100S Katana	1100		KN-133
LT125	125		KN-131
SJ410	1.0L L4 CARB	E-9104	HP-1002
1982 SUZUKI			
DR250	250		KN-136
DR250S	250		KN-136
GN125	125		KN-131
GS450L	450		KN-133
GS450T	450		KN-133
GS450TX	450		KN-133
GS550L	550	SU-5500	KN-133
GS650E	650	SU-5500	KN-133
GS650G	650		KN-133
GS650GL	650		KN-133
GS750	750	SU-1250	KN-133
GS850G	850	SU-1200	KN-133
GS850GL	850	SU-1200	KN-133
GS1000	1000		KN-133
GS1000G	1000		KN-133
GS1000GL	1000		KN-133
GS1000S	1000	SU-1250	KN-133
GS1100E	1100	SU-1250	KN-133
GS1100G	1100	SU-1200	KN-133
GS1100GK	1100	SU-1200	KN-133
GS1100GL	1100	SU-1200	KN-133
GSX1000 Katana	1000		KN-138
			KN-138C
SJ410	1.0L L3 CARB	E-9104	HP-1002
SP250	250		KN-136
1981 SUZUKI			
Carry	0.8L L4 CARB	E-2310	
GN400T	400		KN-136
GS250	250		KN-133
GS450E	450		KN-133
GS450L	450		KN-133
GS450S	450		KN-133

*Indicates 2 filters required ♦ - Intake kit available - see page 80 Applications updated daily at knfilters.com

Vehicle	Engine Type	Air Filter	Oil Filter
1981 SUZUKI			
GS450T	450		KN-133
GS550L	550	SU-5500	KN-133
GS550T	550	SU-5500	KN-133
GS650E	650	SU-5500	KN-133
GS650G	650		KN-133
GS650GL	650		KN-133
GS750	750	SU-1250	KN-133
GS850G	850	SU-1200	KN-133
GS850GL	850	SU-1200	KN-133
GS1000G	1000	SU-1200	KN-133
GS1000GL	1000	SU-1200	KN-133
GS1000S	1000		KN-133
GS1100E	1100	SU-1250	KN-133
LJ80	0.8L L4 CARB	E-9104	
SJ410	1.0L L3 CARB	E-9104	HP-1002
1980 SUZUKI			
GN400T	400		KN-136
GS250	250		KN-133
GS450E	450		KN-133
GS450L	450		KN-133
GS550E	550	SU-5500	KN-133
GS550L	550	SU-5500	KN-133
GS750	750	SU-1250	KN-133
GS850G	850	SU-1200	KN-133
GS850GL	850	SU-1200	KN-133
GS1000	1000		KN-133
GS1000E	1000	SU-1250	KN-133
GS1000G	1000	SU-1200	KN-133
GS1000GL	1000	SU-1200	KN-133
GS1000S	1000	SU-1250	KN-133
GS1100E	1100	SU-1250	KN-133
GS1100L	1100	SU-1250	KN-133
LJ80	0.8L L4 CARB	E-9104	
SJ410	1.0L L3 CARB	E-9104	HP-1002
1979 SUZUKI			
GS425	425		KN-133
GS550	550	SU-5500	KN-133
GS550E	550	SU-5500	KN-133
GS550L	550	SU-5500	KN-133
GS750	750	SU-1200	KN-133
GS850G	850	SU-1200	KN-133
GS850GL	850		KN-133
GS1000	1000	SU-1250	KN-133
GS1000E	1000	SU-1250	KN-133
GS1000L	1000	SU-1250	KN-133
GS1000S	1000	SU-1250	KN-133
GS550D	550		KN-133
1978 SUZUKI			
GS400	400		KN-133
GS550	550	SU-5500	KN-133
GS550E	550	SU-5500	KN-133
GS750	750	SU-1200	KN-133
GS1000	1000	SU-1250	KN-133
GS1000E	1000	SU-1250	KN-133
GS550D	550		KN-133
1977 SUZUKI			
GS400	400		KN-133
GS550	550	SU-5500	KN-133
GS750	750	SU-1200	KN-133
2007 TATA			
Indigo	1.4L L4 DSL	33-2921	

Vehicle	Engine Type	Air Filter	Oil Filter
2007 TATA			
Indigo	1.4L L4 F/I	33-2921	
2006 TATA			
Indigo	1.4L L4 DSL	33-2921	
Indigo	1.4L L4 F/I	33-2921	
2005 TATA			
Indigo	1.4L L4 DSL	33-2921	
Indigo	1.4L L4 F/I	33-2921	
2004 TATA			
Indigo	1.4L L4 DSL	33-2921	
Indigo	1.4L L4 F/I	33-2921	
2013 TOYOTA			
4 Runner	4.0L V6 F/I	33-2438	
Avalon	3.5L V6 F/I	33-2326	HP-7020
Camry	2.5L L4 F/I	33-2370	
Camry	3.5L V6 F/I	33-2443	
Camry Hybrid	2.5L L4 F/I	33-2381	
Corolla	1.8L L4 F/I	33-2360 ♦	HP-7021
Corolla	2.4L L4 F/I	33-2326	
FJ Cruiser	4.0L V6 F/I	33-2438	
Highlander	3.5L V6 F/I	33-2260	HP-7020
Highlander Hybrid	3.5L V6 F/I	33-2455	HP-7020
Matrix	1.8L L4 F/I	33-2360	
Matrix	2.4L L4 F/I	33-2326	HP-1003
Prius	1.8L L4 F/I	33-2435	
Prius C	1.5L L4 F/I		HP-1003
Prius V	1.8L L4 F/I		HP-7021
Sienna	3.5L V6 F/I	33-2443	
Tacoma	2.7L L4 F/I	33-2306 ♦	HP-1002
Tacoma	4.0L V6 F/I	33-2281 ♦	HP-1002
Tundra	4.0L V6 F/I	33-2387	
Venza	2.7L L4 F/I	33-2370 ♦	HP-7020
Venza	3.5L V6 F/I	33-2326 ♦	HP-7020
Yaris	1.5L L4 F/I	33-2360	HP-1003
2012 TOYOTA			
4 Runner	4.0L V6 F/I	33-2438 ♦	
Aurion	1.3L L4 F/I	33-2360	
Auris Hybrid	1.8L L4 F/I	33-2435	
Avalon	3.5L V6 F/I	33-2326	HP-7020
Avanza	1.5L L4 F/I	33-2989	HP-1003
Aygo	1.0L L3 F/I	33-2131 ♦	
Camry	2.5L L4 F/I	33-2370	HP-7020
Camry	3.5L V6 F/I	33-2443 ♦	HP-7020
Camry Hybrid	2.5L L4 F/I	33-2381	HP-7020
Corolla	1.8L L4 F/I	33-2360 ♦	HP-7021
Corolla	2.4L L4 F/I	33-2326	
FJ Cruiser	4.0L V6 F/I	33-2438 ♦	
GT86	2.0L H4 F/I	33-2300	
Highlander	2.7L L4 F/I	33-2260	HP-7020
Highlander	3.5L V6 F/I	33-2260	HP-7020
Highlander Hybrid	3.5L V6 F/I	33-2455	HP-7020
Hilux	2.5L L4 DSL	E-2996	
Hilux	2.7L L4 F/I	E-2296	
Hilux	3.0L L5 DSL	E-2296	
IQ	1.4L L4 DSL	33-2988	
Land Cruiser	3.0L L4 DSL	33-2146	
Land Cruiser	4.0L V6 F/I	33-2438	
Matrix	1.8L L4 F/I	33-2360	HP-7021
Matrix	2.4L L4 F/I		HP-1003
Prius	1.8L L4 F/I	33-2435	HP-7021
Prius C	1.5L L4 F/I		HP-1003
Prius V	1.8L L4 F/I	33-2435	HP-7021

*Indicates 2 filters required ♦ - Intake kit available - see page 80 Applications updated daily at knfilters.com

Vehicle	Engine Type	Air Filter	Oil Filter
2012 TOYOTA			
RAV4	2.5L L4 F/I	33-2355	HP-7020
RAV4	3.5L V6 F/I	33-2355	HP-7020
RAV4 III	2.0L L4 F/I	33-2360	
RAV4 III	2.2L L4 DSL	33-2345	
Sienna	2.7L L4 F/I	33-2443	HP-7020
Sienna	3.5L V6 F/I	33-2443	HP-7020
Tacoma	2.7L L4 F/I	33-2306 ♦	HP-1002
Tacoma	4.0L V6 F/I	33-2281 ♦	HP-1002
Tundra	4.0L V6 F/I	33-2387	
Tundra	4.0L V6 F/I - Spin On	33-2387	HP-1002
Urban Cruiser	1.3L L4 F/I	33-2211	
Venza	2.7L L4 F/I	33-2370	HP-7020
Venza	3.5L V6 F/I	33-2326 ♦	HP-7020
Yaris	1.0L L3 F/I	33-2131	
Yaris	1.3L L4 F/I	33-2211	
Yaris	1.4L L4 DSL	33-2988	
Yaris	1.5L L4 F/I	33-2360	HP-1003
2011 TOYOTA			
4 Runner	4.0L V6 F/I	33-2438 ♦	
Auris Hybrid	1.8L L4 F/I	33-2435	
Avalon	3.5L V6 F/I	33-2326	HP-7020
Avanza	1.3L L4 F/I	33-2989	
Avanza	1.5L L4 F/I	33-2989	HP-1003
Avensis	2.0L L4 F/I	33-2360	
Aygo	1.0L L3 F/I	33-2131 ♦	
Camry	2.5L L4 F/I	33-2370 ♦	HP-7020
Camry	3.5L V6 F/I	33-2326 ♦	HP-7020
Camry Hybrid	2.4L L4 F/I	33-2260	HP-1003
Corolla	1.8L L4 F/I	33-2360 ♦	HP-7021
Corolla	2.4L L4 F/I	33-2326	HP-1003
FJ Cruiser	4.0L V6 F/I	33-2438 ♦	
HiAce	3.0L L4 DSL	33-2987	
Highlander	2.7L L4 F/I	33-2260	HP-7020
Highlander	3.5L V6 F/I	33-2260	HP-7020
Highlander Hybrid	3.5L V6 F/I	33-2455	HP-1002
Hilux	2.5L L4 DSL	E-2996	
Hilux	2.7L L4 F/I	E-2296	HP-1002
Hilux	3.0L L5 DSL	E-2296	
Land Cruiser	3.0L L4 DSL	33-2146	
Land Cruiser	4.0L V6 F/I	33-2438	
Matrix	1.8L L4 F/I	33-2360	HP-7021
Matrix	2.4L L4 F/I	33-2326	HP-1003
Prius	1.8L L4 F/I	33-2435	HP-7021
RAV4	2.5L L4 F/I	33-2355	HP-7020
RAV4	3.5L V6 F/I	33-2355	HP-7020
RAV4 III	2.0L L4 F/I	33-2360	
RAV4 III	2.2L L4 DSL	33-2345	
Rush	1.5L L4 F/I	33-2989	
Sienna	2.7L L4 F/I	33-2443	HP-7020
Sienna	3.5L V6 F/I	33-2443	HP-7020
Tacoma	2.7L L4 F/I	33-2306 ♦	HP-1002
Tacoma	4.0L V6 F/I	33-2281 ♦	HP-1002
Tundra	4.0L V6 F/I	33-2387	
Tundra	4.0L V6 F/I - Spin On	33-2387	HP-1002
Urban Cruiser	1.3L L4 F/I	33-2211	
Venza	2.7L L4 F/I	33-2370	HP-7020
Venza	3.5L V6 F/I	33-2326 ♦	HP-7020
Yaris	1.0L L3 F/I	33-2131 ♦	
Yaris	1.3L L4 F/I	33-2211	
Yaris	1.4L L4 DSL	33-2988	
Yaris	1.5L L4 F/I	33-2360 ♦	HP-1003
Yaris	1.8L L4 F/I	33-2360 ♦	

Vehicle	Engine Type	Air Filter	Oil Filter
2010 TOYOTA			
4 Runner	2.7L L4 F/I		HP-1002
4 Runner	4.0L V6 F/I	33-2438 ♦	
Auris Hybrid	1.8L L4 F/I	33-2435	
Avalon	3.5L V6 F/I	33-2326	HP-7020
Avanza	1.3L L4 F/I	33-2989	
Avanza	1.5L L4 F/I	33-2989	HP-1003
Aygo	1.0L L3 F/I	33-2131 ♦	
Camry	2.5L L4 F/I	33-2370 ♦	HP-7020
Camry	3.5L V6 F/I	33-2326 ♦	HP-7020
Camry Hybrid	2.4L L4 F/I	33-2260	HP-1003
Corolla	1.3L L4 F/I	33-2360	
Corolla	1.8L L4 F/I	33-2360 ♦	HP-7021
Corolla	2.4L L4 F/I	33-2326	HP-1003
FJ Cruiser	4.0L V6 F/I	33-2438 ♦	
HiAce	3.0L L4 DSL	33-2987	
HiAce IV	2.5L L4 DSL	38-9203	
Highlander	2.7L L4 F/I	33-2260	HP-7020
Highlander	3.5L V6 F/I	33-2260	HP-7020
Highlander Hybrid	3.3L V6 F/I	33-2344	HP-1002
Hilux	2.5L L4 DSL	E-2996	
Hilux	2.7L L4 F/I	E-2296	HP-1002
Hilux	3.0L L5 DSL	E-2296	
Land Cruiser	3.0L L4 DSL	33-2146	
Land Cruiser	4.0L V6 F/I	33-2438	
Matrix	1.8L L4 F/I	33-2360	HP-7021
Matrix	2.4L L4 F/I	33-2326	HP-1003
Prius	1.8L L4 F/I	33-2435	HP-7021
RAV4	2.5L L4 F/I	33-2355	HP-7020
RAV4	3.5L V6 F/I	33-2355	HP-7020
RAV4 III	2.0L L4 F/I	33-2360	
RAV4 III	2.2L L4 DSL	33-2345	
Rush	1.5L L4 F/I	33-2989	
Sienna	3.5L V6 F/I	33-2260	HP-7020
Tacoma	2.7L L4 F/I	33-2306 ♦	HP-1002
Tacoma	4.0L V6 F/I	33-2281 ♦	HP-1002
Tundra	4.0L V6 F/I	33-2281 ♦	HP-1002
Venza	2.7L L4 F/I	33-2370	HP-7020
Venza	3.5L V6 F/I	33-2326 ♦	HP-7020
Yaris	1.0L L3 F/I	33-2131 ♦	
Yaris	1.3L L4 F/I	33-2211	
Yaris	1.4L L4 DSL	33-2988	
Yaris	1.5L L4 F/I	33-2360 ♦	HP-1003
Yaris	1.8L L4 F/I	33-2360 ♦	
2009 TOYOTA			
4 Runner	4.0L V6 F/I	33-2281	HP-1002
4 Runner	4.7L V8 F/I		HP-1002
Avalon	3.5L V6 F/I	33-2326	HP-7020
Avanza	1.3L L4 F/I	33-2989	
Avanza	1.5L L4 F/I	33-2989	
Camry	2.4L L4 F/I	33-2370 ♦	HP-1003
Camry	3.5L V6 F/I	33-2326 ♦	HP-7020
Camry Hybrid	2.4L L4 F/I	33-2260	HP-1003
Corolla	1.3L L4 F/I	33-2360	
Corolla	1.4L L4 DSL	33-2953	
Corolla	1.4L L4 F/I	33-2360	
Corolla	1.6L L4 F/I	33-2360	
Corolla	1.8L L4 F/I	33-2360 ♦	HP-7021
Corolla	2.0L L4 DSL	33-2953	
Corolla	2.4L L4 F/I	33-2326	HP-1003
FJ Cruiser	4.0L V6 F/I	33-2281 ♦	HP-1002
HiAce	3.0L L4 DSL	33-2987	
Highlander	2.7L L4 F/I	33-2260	HP-7020
Highlander	3.5L V6 F/I	33-2260	HP-7020

*Indicates 2 filters required ♦ - Intake kit available - see page 80 Applications updated daily at knfilters.com

Vehicle	Engine Type	Air Filter	Oil Filter
2009 TOYOTA			
Highlander Hybrid	3.3L V6 F/I	33-2344	HP-1002
Hilux	2.5L L4 DSL	E-2996	
Hilux	2.7L L4 F/I	E-2296	HP-1002
Hilux	3.0L L5 DSL	E-2296	
Land Cruiser	3.0L L4 DSL	33-2146	
Matrix	1.8L L4 F/I	33-2360	HP-7021
Matrix	2.4L L4 F/I	33-2326 ♦	HP-1003
Prius	1.5L L4 F/I	33-2329	HP-1003
RAV4	2.5L L4 F/I	33-2355	HP-7020
RAV4	3.5L V6 F/I	33-2355	HP-7020
RAV4 III	2.0L L4 F/I - 152BHP	33-2355	
RAV4 III	2.0L L4 F/I - 158BHP	33-2360	
RAV4 III	2.2L L4 DSL	33-2345	
RAV4 III	3.5L V6 F/I	33-2355	
Rush	1.5L L4 F/I	33-2989	
Sequoia	4.7L V8 F/I		HP-1002
Sienna	3.5L V6 F/I	33-2260	HP-7020
Solara	2.4L L4 F/I	33-2260	
Tacoma	2.7L L4 F/I	33-2306 ♦	HP-1002
Tacoma	4.0L V6 F/I	33-2281 ♦	HP-1002
Tundra	4.0L V6 F/I	33-2281 ♦	HP-1002
Tundra	4.7L V8 F/I	33-2387 ♦	HP-1002
Urban Cruiser	1.3L L4 F/I	33-2211	
Venza	2.7L L4 F/I	33-2370	HP-7020
Venza	3.5L V6 F/I	33-2326 ♦	HP-7020
Yaris	1.0L L3 F/I	33-2131 ♦	
Yaris	1.3L L4 F/I - 101BHP	33-2211	
Yaris	1.3L L4 F/I - 87BHP	33-2131	
Yaris	1.4L L4 DSL	33-2988	
Yaris	1.5L L4 F/I	33-2360 ♦	HP-1003
Yaris	1.8L L4 F/I	33-2360 ♦	
2008 TOYOTA			
4 Runner	4.0L V6 F/I	33-2281 ♦	HP-1002
4 Runner	4.7L V8 F/I	33-2144 ♦	HP-1002
Avalon	3.5L V6 F/I	33-2326	HP-7020
Avanza	1.3L L4 F/I	33-2989	
Avanza	1.5L L4 F/I	33-2989	
Camry	2.4L L4 F/I	33-2370 ♦	HP-1003
Camry	3.5L V6 F/I	33-2326 ♦	HP-7020
Camry Hybrid	2.4L L4 F/I	33-2260	HP-1003
Corolla	1.4L L4 DSL	33-2953	
Corolla	1.4L L4 F/I	33-2360	
Corolla	1.6L L4 F/I	33-2360	
Corolla	1.8L L4 F/I	33-2252 ♦	HP-1003
Corolla	2.0L L4 DSL	33-2953	
FJ Cruiser	4.0L V6 F/I	33-2281 ♦	HP-1002
HiAce	3.0L L4 DSL	33-2987	
HiAce IV	2.7L L4 F/I		HP-1002
Highlander	3.5L V6 F/I	33-2260	HP-7020
Highlander Hybrid	3.3L V6 F/I	33-2344	HP-1002
Hilux	2.5L L4 DSL	38-9203	
Hilux	2.7L L4 F/I	E-2296	HP-1002
Hilux	3.0L L5 DSL	E-2296	
Matrix	1.8L L4 F/I	33-2252	HP-1003
Prius	1.5L L4 F/I	33-2329	HP-1003
RAV4	2.4L L4 F/I	33-2355	HP-1003
RAV4	3.5L V6 F/I	33-2355	HP-7020
RAV4 III	2.0L L4 F/I	33-2355	
RAV4 III	2.2L L4 DSL	33-2345	
RAV4 III	2.4L L4 F/I	33-2355	HP-1003
RAV4 III	3.5L V6 F/I	33-2355	
Rush	1.5L L4 F/I	33-2989	
Sequoia	4.7L V8 F/I		HP-1002

Vehicle	Engine Type	Air Filter	Oil Filter
2008 TOYOTA			
Sienna	3.5L V6 F/I	33-2260	HP-7020
Solara	2.4L L4 F/I	33-2260	HP-1003
Solara	3.3L V6 F/I	33-2260	HP-1002
Tacoma	2.7L L4 F/I	33-2306 ♦	HP-1002
Tacoma	4.0L V6 F/I	33-2281 ♦	HP-1002
Tundra	4.0L V6 F/I	33-2281 ♦	HP-1002
Tundra	4.7L V8 F/I	33-2387 ♦	HP-1002
Yaris	1.0L L3 F/I	33-2131 ♦	
Yaris	1.3L L4 F/I	33-2131	
Yaris	1.5L L4 F/I	33-2360 ♦	HP-1003
Yaris	1.8L L4 F/I	33-2360 ♦	
2007 TOYOTA			
4 Runner	4.0L V6 F/I	33-2281 ♦	HP-1002
4 Runner	4.7L V8 F/I	33-2144 ♦	HP-1002
Avalon	3.5L V6 F/I	33-2326	HP-7020
Avanza	1.3L L4 F/I	33-2989	
Avanza	1.5L L4 F/I	33-2989	
Camry	2.4L L4 F/I	33-2370 ♦	HP-1003
Camry	3.5L V6 F/I	33-2326 ♦	HP-7020
Camry Hybrid	2.4L L4 F/I	33-2260	HP-1003
Corolla	1.4L L4 DSL - from 4/07	33-2953	
Corolla	1.4L L4 DSL - to 3/07	33-2835	
Corolla	1.4L L4 F/I	33-2360 ♦	
Corolla	1.6L L4 F/I - from 4/07	33-2360 ♦	
Corolla	1.6L L4 F/I - to 3/07	33-2252 ♦	
Corolla	1.8L L4 F/I	33-2252 ♦	HP-1003
Corolla	2.0L L4 DSL	33-2953	
Corolla	2.2L L4 DSL	33-2926	
FJ Cruiser	4.0L V6 F/I	33-2281 ♦	HP-1002
HiAce	3.0L L4 DSL	33-2987	
Highlander	2.4L L4 F/I	33-2260	HP-1003
Highlander	3.3L V6 F/I	33-2260	HP-1002
Highlander Hybrid	3.3L V6 F/I	33-2344	HP-1002
Hilux	2.5L L4 DSL	38-9203	
Hilux	2.7L L4 F/I	E-2296	HP-1002
Hilux	3.0L L5 DSL	E-2296	
Land Cruiser	4.7L V8 F/I	33-2146	HP-1002
Matrix	1.8L L4 F/I	33-2252	HP-1003
Prius	1.5L L4 F/I	33-2329	HP-1003
RAV4	2.4L L4 F/I	33-2355	HP-1003
RAV4	3.5L V6 F/I	33-2355	HP-7020
RAV4 III	2.0L L4 F/I	33-2355	
RAV4 III	2.2L L4 DSL	33-2345	
RAV4 III	2.4L L4 F/I	33-2355	HP-1003
RAV4 III	3.5L V6 F/I	33-2355	
Rush	1.5L L4 F/I	33-2989	
Sequoia	4.7L V8 F/I	33-2144 ♦	HP-1002
Sienna	3.5L V6 F/I	33-2260	HP-7020
Solara	2.4L L4 F/I	33-2260	HP-1003
Solara	3.3L V6 F/I	33-2260	HP-1002
Tacoma	2.7L L4 F/I	33-2306 ♦	HP-1002
Tacoma	4.0L V6 F/I	33-2281 ♦	HP-1002
Tundra	4.0L V6 F/I	33-2281 ♦	HP-1002
Tundra	4.7L V8 F/I	33-2387 ♦	HP-1002
Yaris	1.0L L3 F/I	33-2131 ♦	
Yaris	1.3L L4 F/I	33-2131	
Yaris	1.5L L4 F/I	33-2360 ♦	HP-1003
Yaris	1.8L L4 F/I	33-2360 ♦	
2006 TOYOTA			
4 Runner	4.0L V6 F/I	33-2281 ♦	HP-1002
4 Runner	4.7L V8 F/I	33-2144 ♦	HP-1002
Avalon	3.5L V6 F/I	33-2326	HP-7020

*Indicates 2 filters required ♦ - Intake kit available - see page 80 Applications updated daily at knfilters.com

Partial Listing - Complete List of Vehicles and Applications at knfilters.com

2006 TOYOTA

Vehicle	Engine Type	Air Filter	Oil Filter
Avanza	1.3L L4 F/I	33-2989	
Camry	2.4L L4 F/I	33-2260 ♦	HP-1003
Camry	3.0L V6 F/I	33-2260	HP-1002
Camry	3.3L V6 F/I	33-2260	HP-1002
Celica	1.8L L4 F/I	33-2041-1 ♦	
Corolla	1.4L L4 DSL	33-2835	
Corolla	1.4L L4 F/I	33-2252 ♦	
Corolla	1.6L L4 F/I	33-2252 ♦	
Corolla	1.8L L4 F/I	33-2252 ♦	HP-1003
Corolla	2.0L L4 DSL	33-2835	
Corolla	2.2L L4 DSL	33-2926	
HiAce IV	2.7L L4 F/I		HP-1002
Highlander	2.4L L4 F/I	33-2260	HP-1003
Highlander	3.3L V6 F/I	33-2260	HP-1002
Highlander Hybrid	3.3L V6 F/I	33-2344	HP-1002
Hilux	2.5L L4 DSL	38-9203	
Hilux	2.7L L4 F/I	E-2296	HP-1002
Land Cruiser	3.0L L4 DSL - w/Round Filter	E-2444	
Land Cruiser	4.2L L6 DSL - w/Round Filter	E-2444	
Land Cruiser	4.7L V8 F/I	33-2146	HP-1002
Matrix	1.8L L4 F/I	33-2252	HP-1003
Matrix XR	1.8L L4 F/I	33-2252	HP-1003
Matrix XRS	1.8L L4 F/I	33-2252 ♦	HP-1003
Prius	1.5L L4 F/I	33-2329	HP-1003
RAV4	2.4L L4 F/I	33-2355	HP-1003
RAV4	3.5L V6 F/I	33-2355	HP-7020
RAV4 II	2.0L L4 F/I	33-2216	
RAV4 III	2.0L L4 F/I	33-2355	
RAV4 III	2.2L L4 DSL	33-2345	
RAV4 III	2.4L L4 F/I	33-2355	HP-1003
RAV4 III	3.5L V6 F/I	33-2355	
Rush	1.5L L4 F/I	33-2989	
Sequoia	4.7L V8 F/I	33-2144 ♦	HP-1002
Sienna	3.3L V6 F/I	33-2260	HP-1002
Solara	2.4L L4 F/I	33-2260 ♦	HP-1003
Solara	3.3L V6 F/I	33-2260	HP-1002
Tacoma	2.7L L4 F/I	33-2306 ♦	HP-1002
Tacoma	4.0L V6 F/I	33-2281 ♦	HP-1002
Tundra	4.0L V6 F/I	33-2281 ♦	HP-1002
Tundra	4.7L V8 F/I	33-2144 ♦	HP-1002
Vigo	2.5L L4 DSL	E-2296	
Vigo	3.0L L4 DSL	E-2296	
Yaris	1.3L L4 F/I	33-2131	
Yaris	1.5L L4 F/I	33-2360 ♦	HP-1003

2005 TOYOTA

Vehicle	Engine Type	Air Filter	Oil Filter
4 Runner	4.0L V6 F/I	33-2281 ♦	HP-1002
4 Runner	4.7L V8 F/I	33-2144 ♦	HP-1002
Avalon	3.5L V6 F/I	33-2326	HP-7020
Camry	2.4L L4 F/I	33-2260 ♦	HP-1003
Camry	3.0L V6 F/I	33-2260	HP-1002
Camry	3.3L V6 F/I	33-2260	HP-1002
Celica	1.8L L4 F/I	33-2041-1 ♦	HP-1003
Celica GT	1.8L L4 F/I	33-2041-1	HP-1003
Celica GTS	1.8L L4 F/I	33-2041-1	HP-1003
Corolla	1.4L L4 DSL	33-2835	
Corolla	1.4L L4 F/I	33-2252 ♦	
Corolla	1.6L L4 F/I	33-2252 ♦	
Corolla	1.8L L4 F/I	33-2252 ♦	HP-1003
Corolla	2.0L L4 DSL	33-2835	
Corolla	2.2L L4 DSL	33-2926	
Echo	1.5L L4 F/I	33-2211	HP-1003
Highlander	2.4L L4 F/I	33-2260	HP-1003

2005 TOYOTA

Vehicle	Engine Type	Air Filter	Oil Filter
Highlander	3.3L V6 F/I	33-2260	HP-1002
Hilux	2.5L L4 DSL	38-9203	
Hilux	2.7L L4 F/I - to 6/05	E-2233	
Hilux	2.7L L4 F/I - To 7/05	E-2296	
Hilux	3.0L L5 DSL	E-2015	
Hilux	3.0L L5 F/I	E-2015	
Land Cruiser	3.0L L4 DSL - w/Round Filter	E-2444	
Land Cruiser	4.2L L6 DSL - w/Round Filter	E-2444	
Land Cruiser	4.7L V8 F/I	33-2146 ♦	HP-1002
Matrix	1.8L L4 F/I	33-2252	HP-1003
Matrix XR	1.8L L4 F/I	33-2252	HP-1003
Matrix XRS	1.8L L4 F/I	33-2252 ♦	HP-1003
MR2 Spyder	1.8L L4 F/I	33-2041-1 ♦	HP-1003
Prius	1.5L L4 F/I	33-2329	HP-1003
RAV4	2.4L L4 F/I	33-2216	HP-1003
RAV4 II	1.8L L4 F/I	33-2855	
RAV4 II	2.0L L4 F/I	33-2216 ♦	
RAV4 III	2.0L L4 DSL	33-2843	
RAV4 III	2.4L L4 F/I	33-2216	HP-1003
Rush	1.5L L4 F/I	33-2989	
Sequoia	4.7L V8 F/I	33-2144 ♦	HP-1002
Sienna	3.3L V6 F/I	33-2260	HP-1002
Solara	2.4L L4 F/I	33-2260 ♦	HP-1003
Solara	3.3L V6 F/I	33-2260	HP-1002
Tacoma	2.7L L4 F/I	33-2306 ♦	HP-1002
Tacoma	4.0L V6 F/I	33-2281 ♦	HP-1002
Tundra	4.0L V6 F/I	33-2281 ♦	HP-1002
Tundra	4.7L V8 F/I	33-2144 ♦	HP-1002
Vigo	3.0L L4 DSL	E-2296	

2004 TOYOTA

Vehicle	Engine Type	Air Filter	Oil Filter
4 Runner	4.0L V6 F/I	33-2281 ♦	HP-1002
4 Runner	4.7L V8 F/I	33-2144 ♦	HP-1002
Avalon	3.0L V6 F/I	33-2145-1	HP-1002
Avensis	1.8L L4 F/I	33-2252 ♦	
Camry	2.4L L4 F/I	33-2260 ♦	HP-1003
Camry	3.0L V6 F/I	33-2260	HP-1002
Camry	3.3L V6 F/I	33-2260	HP-1002
Celica	1.8L L4 F/I	33-2041-1 ♦	HP-1003
Celica GT	1.8L L4 F/I	33-2041-1 ♦	HP-1003
Celica GTS	1.8L L4 F/I	33-2041-1 ♦	HP-1003
Corolla	1.4L L4 DSL	33-2835	
Corolla	1.4L L4 F/I	33-2252 ♦	
Corolla	1.6L L4 F/I	33-2252 ♦	
Corolla	1.8L L4 F/I	33-2252 ♦	HP-1003
Corolla	2.0L L4 DSL	33-2835	
Echo	1.5L L4 F/I	33-2211	HP-1003
Highlander	2.4L L4 F/I	33-2260	HP-1003
Highlander	3.3L V6 F/I	33-2260	HP-1002
Hilux	2.7L L4 F/I	E-2233	HP-1002
Hilux	3.0L L5 DSL	E-2015	
Hilux	3.0L L5 F/I	E-2015	
Land Cruiser	3.0L L4 DSL - w/Round Filter	E-2444	
Land Cruiser	3.4L V6 F/I	33-2054	
Land Cruiser	4.2L L6 DSL - w/Round Filter	E-2444	
Land Cruiser	4.7L V8 F/I	33-2146 ♦	HP-1002
Matrix	1.8L L4 F/I	33-2252	HP-1003
Matrix XR	1.8L L4 F/I	33-2252 ♦	HP-1003
Matrix XRS	1.8L L4 F/I	33-2252 ♦	HP-1003
MR2 Spyder	1.8L L4 F/I	33-2041-1 ♦	HP-1003
Prado	4.0L V6 F/I	33-2281	
Prius	1.5L L4 F/I	33-2329	HP-1003

*Indicates 2 filters required ♦ - Intake kit available - see page 80 Applications updated daily at knfilters.com

Vehicle	Engine Type	Air Filter	Oil Filter
2004 TOYOTA			
RAV4	2.4L L4 F/I	33-2216	HP-1003
RAV4 II	1.8L L4 F/I	33-2855	
RAV4 II	2.0L L4 F/I	33-2216 ♦	
RAV4 III	2.0L L4 DSL	33-2843	
Rush	1.5L L4 F/I	33-2989	
Sequoia	4.7L V8 F/I	33-2144 ♦	HP-1002
Sienna	3.3L V6 F/I	33-2260	HP-1002
Solara	2.4L L4 F/I	33-2260 ♦	HP-1003
Solara	3.3L V6 F/I	33-2260	HP-1002
Tacoma	2.4L L4 F/I	33-2050-1 ♦	HP-1002
Tacoma	2.7L L4 F/I	33-2050-1 ♦	HP-1002
Tacoma	3.4L V6 F/I	33-2054 ♦	HP-1002
Tundra	3.4L V6 F/I	33-2144 ♦	HP-1002
Tundra	4.7L V8 F/I	33-2144 ♦	HP-1002
Yaris	1.5L L4 F/I	33-2211 ♦	
2003 TOYOTA			
4 Runner	4.0L V6 F/I	33-2281 ♦	HP-1002
4 Runner	4.7L V8 F/I	33-2144 ♦	HP-1002
Avalon	3.0L V6 F/I	33-2145-1	HP-1002
Avensis Verso	2.0L L4 DSL	33-2030	
Avensis Verso	2.0L L4 F/I	33-2739	
Camry	2.4L L4 F/I	33-2260 ♦	HP-1003
Camry	3.0L V6 F/I	33-2260	HP-1002
Celica	1.8L L4 F/I	33-2041-1 ♦	
Celica GT	1.8L L4 F/I	33-2041-1 ♦	HP-1003
Celica GTS	1.8L L4 F/I	33-2041-1 ♦	HP-1003
Corolla	1.4L L4 F/I	33-2252 ♦	
Corolla	1.6L L4 F/I	33-2252 ♦	
Corolla	1.8L L4 F/I	33-2252 ♦	HP-1003
Corolla	2.0L L4 DSL	33-2835	
Echo	1.5L L4 F/I	33-2211	HP-1003
Highlander	2.4L L4 F/I	33-2260	HP-1003
Highlander	3.0L V6 F/I	33-2260	HP-1002
Hilux	2.7L L4 F/I	E-2233	HP-1002
Hilux	3.0L L5 DSL	E-2015	
Hilux	3.0L L5 F/I	E-2015	
Land Cruiser	3.0L L4 DSL	E-2444	
Land Cruiser	4.2L L6 DSL	E-2444	
Land Cruiser	4.7L V8 F/I	33-2146 ♦	HP-1002
Matrix	1.8L L4 F/I	33-2252	HP-1003
Matrix XR	1.8L L4 F/I	33-2252 ♦	HP-1003
Matrix XRS	1.8L L4 F/I	33-2252 ♦	HP-1003
MR2 Spyder	1.8L L4 F/I	33-2041-1 ♦	HP-1003
Prius	1.5L L4 F/I	33-2186	HP-1003
RAV4	2.0L L4 F/I	33-2216	HP-1003
RAV4 II	1.8L L4 F/I	33-2855	
RAV4 II	2.0L L4 F/I	33-2216 ♦	
RAV4 III	2.0L L4 DSL	33-2843	
Sequoia	4.7L V8 F/I	33-2144 ♦	HP-1002
Sienna	3.0L V6 F/I	33-2145-1	HP-1002
Solara	2.4L L4 F/I	33-2145-1 ♦	HP-1003
Solara	3.0L V6 F/I	33-2145-1	HP-1002
Tacoma	2.4L L4 F/I	33-2050-1 ♦	HP-1002
Tacoma	2.7L L4 F/I	33-2050-1 ♦	HP-1002
Tacoma	3.4L V6 F/I	33-2054 ♦	HP-1002
Tundra	3.4L V6 F/I	33-2144 ♦	HP-1002
Tundra	4.7L V8 F/I	33-2144 ♦	HP-1002
Yaris	1.5L L4 F/I	33-2211 ♦	
2002 TOYOTA			
4 Runner	3.4L V6 F/I	33-2054 ♦	HP-1002
4 Runner	4.0L V6 F/I	33-2281	HP-1002
4 Runner	4.7L V8 F/I	33-2144	HP-1002
Avalon	3.0L V6 F/I	33-2145-1	HP-1002

Vehicle	Engine Type	Air Filter	Oil Filter
2002 TOYOTA			
Camry	2.4L L4 F/I	33-2260 ♦	HP-1003
Camry	3.0L V6 F/I	33-2260	HP-1002
Celica	1.8L L4 F/I	33-2041-1 ♦	
Celica GT	1.8L L4 F/I	33-2041-1 ♦	HP-1003
Celica GTS	1.8L L4 F/I	33-2041-1 ♦	HP-1003
Corolla	1.4L L4 F/I	33-2252 ♦	
Corolla	1.6L L4 F/I	33-2252 ♦	
Corolla	1.8L L4 F/I - Non-US	33-2252 ♦	
Corolla	1.8L L4 F/I - US	33-2672 ♦	HP-1003
Corolla	1.9L L4 DSL	33-2835	
Corolla	2.0L L4 DSL	33-2835	
Echo	1.5L L4 F/I	33-2211	HP-1003
Highlander	2.4L L4 F/I	33-2260	HP-1003
Highlander	3.0L V6 F/I	33-2260	HP-1002
Hilux	2.7L L4 F/I	E-2233	HP-1002
Hilux	3.0L L5 DSL	E-2015	
Hilux	3.0L L5 F/I	E-2015	
Land Cruiser	3.0L L4 DSL	E-2444	
Land Cruiser	3.4L L4 F/I	33-2054	
Land Cruiser	4.2L L6 DSL	E-2444	
Land Cruiser	4.7L V8 F/I	33-2146 ♦	HP-1002
MR2 Spyder	1.8L L4 F/I	33-2041-1 ♦	HP-1003
Prius	1.5L L4 F/I	33-2186	HP-1003
RAV4	2.0L L4 F/I	33-2216	HP-1003
RAV4 II	1.8L L4 F/I	33-2855	
RAV4 II	2.0L L4 F/I	33-2216 ♦	
RAV4 III	2.0L L4 DSL	33-2843	
Sequoia	4.7L V8 F/I	33-2144 ♦	HP-1002
Sienna	3.0L V6 F/I	33-2145-1	HP-1002
Solara	2.4L L4 F/I	33-2145-1 ♦	HP-1003
Solara	3.0L V6 F/I	33-2145-1	HP-1002
Tacoma	2.4L L4 F/I	33-2050-1 ♦	HP-1002
Tacoma	2.7L L4 F/I	33-2050-1 ♦	HP-1002
Tacoma	3.4L V6 F/I	33-2054 ♦	HP-1002
Tundra	3.4L V6 F/I	33-2144 ♦	HP-1002
Tundra	4.7L V8 F/I	33-2144 ♦	HP-1002
Yaris	1.5L L4 F/I	33-2211 ♦	
2001 TOYOTA			
4 Runner	3.4L V6 F/I	33-2054 ♦	HP-1002
Avalon	3.0L V6 F/I	33-2145-1	HP-1002
Camry	2.2L L4 F/I	33-2145-1	HP-1003
Camry	2.4L L4 F/I	33-2260	
Camry	3.0L V6 F/I	33-2145-1	HP-1002
Celica	1.8L L4 F/I	33-2041-1 ♦	HP-1003
Celica GT	1.8L L4 F/I	33-2041-1 ♦	HP-1003
Celica GTS	1.8L L4 F/I	33-2041-1 ♦	HP-1003
Comfort Taxi	2.0L L4 F/I	33-2241	
Corolla	1.4L L4 F/I	33-2252 ♦	
Corolla	1.6L L4 F/I	33-2252 ♦	
Corolla	1.8L L4 F/I		HP-1003
Corolla	1.8L L4 F/I - Non-US	33-2252 ♦	HP-1003
Corolla	1.8L L4 F/I - US	33-2672	HP-1003
Corolla	1.9L L4 DSL	33-2835	
Corolla	2.0L L4 DSL	33-2835	
Corolla	2.0L L4 F/I	33-2252	
Echo	1.5L L4 F/I	33-2211	HP-1003
Highlander	2.4L L4 F/I	33-2260	HP-1003
Highlander	3.0L V6 F/I	33-2260	HP-1002
Hilux	2.7L L4 F/I	E-2233	HP-1002
Hilux	3.0L L5 DSL	E-2015	HP-3001
Hilux	3.0L L5 F/I	E-2015	
Land Cruiser	3.0L L4 DSL	E-2444	
Land Cruiser	4.2L L6 DSL	E-2444	

*Indicates 2 filters required ♦ - Intake kit available - see page 80 Applications updated daily at knfilters.com

Vehicle	Engine Type	Air Filter	Oil Filter
2001 TOYOTA			
Land Cruiser	4.5L L6 F/I	E-2444	
Land Cruiser	4.7L V8 F/I	33-2146 ♦	HP-1002
MR2 Spyder	1.8L L4 F/I	33-2041-1 ♦	HP-1003
Prado	3.0L V6 F/I	E-2444	
Prius	1.5L L4 F/I	33-2186	HP-1003
RAV4	2.0L L4 F/I	33-2216	HP-1003
RAV4 II	1.8L L4 F/I	33-2855	
RAV4 II	2.0L L4 F/I	33-2216 ♦	
RAV4 III	2.0L L4 DSL	33-2843	
Sequoia	4.7L V8 F/I	33-2144 ♦	HP-1002
Sienna	3.0L V6 F/I	33-2145-1	HP-1002
Solara	2.2L L4 F/I	33-2145-1	HP-1003
Solara	3.0L V6 F/I	33-2145-1	HP-1002
Tacoma	2.4L L4 F/I	33-2050-1 ♦	HP-1002
Tacoma	2.7L L4 F/I	33-2050-1 ♦	HP-1002
Tacoma	3.4L V6 F/I	33-2054 ♦	HP-1002
Tundra	3.4L V6 F/I	33-2144 ♦	HP-1002
Tundra	4.7L V8 F/I	33-2144 ♦	HP-1002
Yaris	1.5L L4 F/I	33-2211 ♦	
2000 TOYOTA			
4 Runner	2.7L L4 F/I	33-2050-1 ♦	HP-1002
4 Runner	3.4L V6 F/I	33-2054 ♦	HP-1002
Avalon	3.0L V6 F/I	33-2145-1	HP-1002
Avensis	2.0L L4 DSL - Exc., 90BHP	33-2230	
Camry	2.2L L4 F/I	33-2145-1	HP-1003
Camry	3.0L V6 F/I	33-2145-1	HP-1002
Celica	1.8L L4 F/I	33-2041-1 ♦	HP-1003
Celica GT	1.8L L4 F/I	33-2041-1 ♦	HP-1003
Celica GTS	1.8L L4 F/I	33-2041-1 ♦	HP-1003
Comfort Taxi	2.0L L4 F/I	33-2241	
Corolla	1.3L L4 F/I	33-2671	
Corolla	1.4L L4 F/I - 86BHP, Left Hand Drive	33-2671	
Corolla	1.4L L4 F/I - 97BHP	33-2252	
Corolla	1.8L L4 F/I		HP-1003
Corolla	1.8L L4 F/I - Non-US	E-2690	HP-1003
Corolla	1.8L L4 F/I - US	33-2672	HP-1003
Corolla	1.9L L4 DSL	33-2835	
Corolla	2.0L L4 DSL	33-2835	
Echo	1.5L L4 F/I	33-2211	HP-1003
Hilux	2.7L L4 F/I	E-2233	HP-1002
Hilux	3.0L L5 DSL	E-2015	HP-3001
Hilux	3.0L L5 F/I	E-2015	
Land Cruiser	3.0L L4 DSL - D-4D	E-2444	
Land Cruiser	3.0L L4 DSL - Exc., D-4D	E-2233	
Land Cruiser	4.2L L6 DSL	E-2444	
Land Cruiser	4.5L L6 F/I	E-2444	
Land Cruiser	4.7L V8 F/I	33-2146 ♦	HP-1002
MR2	2.0L L4 F/I	33-2030 ♦	
MR2 Spyder	1.8L L4 F/I	33-2041-1 ♦	HP-1003
Prius	1.5L L4 F/I	33-2186	
RAV4	2.0L L4 F/I	33-2163	HP-1003
RAV4 I	2.0L L4 F/I		HP-1003
RAV4 I	2.0L L4 F/I - 129BHP	33-2030 ♦	HP-1003
RAV4 II	1.8L L4 F/I	33-2855	
RAV4 II	2.0L L4 F/I	33-2216 ♦	
RAV4 III	2.0L L4 DSL	33-2843	
Sienna	3.0L V6 F/I	33-2145-1	HP-1002
Solara	2.2L L4 F/I	33-2145-1	HP-1003
Solara	3.0L V6 F/I	33-2145-1	HP-1002
Tacoma	2.4L L4 F/I	33-2050-1 ♦	HP-1002
Tacoma	2.7L L4 F/I	33-2050-1 ♦	HP-1002
Tacoma	3.4L V6 F/I	33-2054 ♦	HP-1002
2000 TOYOTA			
Tundra	3.4L V6 F/I	33-2144 ♦	HP-1002
Tundra	4.7L V8 F/I	33-2144 ♦	HP-1002
Yaris	1.3L L4 F/I	33-2211 ♦	
Yaris	1.5L L4 F/I	33-2211	
1999 TOYOTA			
4 Runner	2.7L L4 F/I	33-2050-1 ♦	HP-1002
4 Runner	3.4L V6 F/I	33-2054 ♦	HP-1002
Avalon	3.0L V6 F/I	33-2145-1	HP-1002
Camry	2.2L L4 F/I	33-2145-1	HP-1003
Camry	3.0L V6 F/I	33-2145-1	HP-1002
Celica	1.8L L4 F/I - from 11/99	33-2041-1 ♦	
Celica	1.8L L4 F/I - to 10/99	33-2052 ♦	
Celica	2.0L L4 F/I	33-2052 ♦	
Celica	2.2L L4 F/I	33-2052	HP-1003
Comfort Taxi	2.0L L4 F/I	33-2241	
Corolla	1.3L L4 F/I	33-2671	
Corolla	1.4L L4 F/I - Left Hand Drive	33-2671	
Corolla	1.6L L4 F/I	33-2672 ♦	
Corolla	1.8L L4 F/I		HP-1003
Corolla	1.8L L4 F/I - Non-US	E-2690	HP-1003
Corolla	1.8L L4 F/I - US	33-2672	HP-1003
Corolla	2.0L L4 DSL	33-2030	
Hilux	2.7L L4 F/I	E-2233	HP-1002
Hilux	3.0L L5 DSL	E-2015	HP-3001
Hilux	3.0L L5 F/I	E-2015	
Land Cruiser	3.0L L4 DSL	E-2233	
Land Cruiser	4.2L L6 DSL	E-2444	
Land Cruiser	4.5L L6 F/I	E-2444	
Land Cruiser	4.7L V8 F/I	33-2146 ♦	HP-1002
MR2	2.0L L4 F/I	33-2030 ♦	
Paseo	1.5L L4 F/I	33-2094	HP-1003
Picnic	2.2L L4 DSL	33-2798	
RAV4	2.0L L4 F/I	33-2163	HP-1003
RAV4 I	2.0L L4 F/I - 129BHP	33-2030 ♦	
Sienna	3.0L V6 F/I	33-2145-1	HP-1002
Solara	2.2L L4 F/I	33-2145-1	HP-1003
Solara	3.0L V6 F/I	33-2145-1	HP-1002
Starlet	1.3L L4 F/I	33-2094	
Tacoma	2.4L L4 F/I	33-2050-1 ♦	HP-1002
Tacoma	2.7L L4 F/I	33-2050-1 ♦	HP-1002
Tacoma	3.4L V6 F/I	33-2054 ♦	HP-1002
Tercel	1.5L L4 F/I	33-2094	HP-1003
Yaris	1.5L L4 F/I	33-2211	
1998 TOYOTA			
4 Runner	2.7L L4 F/I	33-2050-1 ♦	HP-1002
4 Runner	3.4L V6 F/I	33-2054 ♦	HP-1002
Avalon	3.0L V6 F/I	33-2145-1	HP-1002
Camry	2.2L L4 F/I	33-2145-1	HP-1003
Camry	3.0L V6 F/I	33-2145-1	HP-1002
Celica	1.8L L4 F/I	33-2052 ♦	
Celica	2.0L L4 F/I	33-2052 ♦	
Celica	2.2L L4 F/I	33-2052	HP-1003
Comfort Taxi	2.0L L4 F/I	33-2241	
Corolla	1.3L L4 F/I	33-2671	
Corolla	1.4L L4 F/I - Left Hand Drive	33-2671	
Corolla	1.6L L4 F/I	33-2672 ♦	
Corolla	1.8L L4 F/I		HP-1003
Corolla	1.8L L4 F/I - Non-US	E-2690	HP-1003
Corolla	1.8L L4 F/I - US	33-2672	HP-1003
Corolla	2.0L L4 DSL	33-2030	
Hilux	3.0L L5 DSL	E-2015	HP-3001
Land Cruiser	3.0L L4 DSL	E-2233	

*Indicates 2 filters required ♦ - Intake kit available - see page 80 Applications updated daily at knfilters.com

Vehicle	Engine Type	Air Filter	Oil Filter
1998 TOYOTA			
Land Cruiser	3.4L L4 F/I	33-2054	
Land Cruiser	4.2L L6 DSL	E-2444	
Land Cruiser	4.5L L6 F/I	E-2444	
Land Cruiser	4.7L V8 F/I	33-2146	HP-1002
MR2	2.0L L4 F/I	33-2030 ♦	
Paseo	1.5L L4 F/I	33-2094	HP-1003
Previa	2.4L L4 F/I	33-2050-1	
RAV4	2.0L L4 F/I	33-2163	HP-1003
RAV4 I	2.0L L4 F/I - 129BHP	33-2030 ♦	
Sienna	3.0L V6 F/I	33-2145-1	HP-1002
Starlet	1.3L L4 F/I	33-2094	
Supra	3.0L L6 F/I	33-2054	HP-1002
T100	2.7L L4 F/I	33-2064	HP-1002
T100	3.4L V6 F/I	33-2064 ♦	HP-1002
Tacoma	2.4L L4 F/I	33-2050-1 ♦	HP-1002
Tacoma	2.7L L4 F/I	33-2050-1 ♦	HP-1002
Tacoma	3.4L V6 F/I	33-2054 ♦	HP-1002
Tercel	1.5L L4 F/I	33-2094	HP-1003
1997 TOYOTA			
4 Runner	2.7L L4 F/I	33-2050-1 ♦	HP-1002
4 Runner	3.0L V6 DSL	E-9270	
4 Runner	3.4L V6 F/I	33-2054 ♦	HP-1002
Avalon	3.0L V6 F/I	33-2145-1	HP-1002
Camry	2.2L L4 F/I	33-2145-1	HP-1003
Camry	3.0L V6 F/I	33-2145-1	HP-1002
Celica	1.8L L4 F/I		HP-1003
Celica	1.8L L4 F/I - US	33-2052 ♦	HP-1003
Celica	2.0L L4 F/I	33-2052 ♦	
Celica	2.2L L4 F/I	33-2052	HP-1003
Corolla	1.3L L4 F/I - Exc., 72BHP	33-2671	
Corolla	1.4L L4 F/I - Left Hand Drive	33-2671	
Corolla	1.6L L4 F/I	33-2672 ♦	HP-1003
Corolla	1.8L L4 F/I		HP-1003
Corolla	1.8L L4 F/I - Non-US, from 5/97	E-2690	HP-1003
Corolla	1.8L L4 F/I - Non-US, to 4/97	33-2672	HP-1003
Corolla	1.8L L4 F/I - US	33-2672	HP-1003
Corolla	2.0L L4 DSL	33-2030	
HiAce IV	2.4L L4 DSL	38-9203	
HiAce IV	2.4L L4 F/I	38-9203	
Hilux	2.7L L4 F/I	E-2233	HP-1002
Hilux	3.0L L5 DSL	E-2015	HP-3001
Land Cruiser	3.0L L4 DSL	E-2233	
Land Cruiser	3.4L L4 F/I	33-2054	
Land Cruiser	4.2L L6 DSL	E-2443	
Land Cruiser	4.5L L6 F/I	E-2443	HP-1002
Lexcen	3.8L V6 F/I	33-2031-2	HP-1007
MR2	2.0L L4 F/I	33-2030 ♦	
Paseo	1.5L L4 F/I	33-2094	HP-1003
Previa	2.4L L4 F/I	33-2050-1	HP-1002
RAV4	2.0L L4 F/I	33-2163	HP-1003
RAV4 I	2.0L L4 F/I - 129BHP	33-2030 ♦	
Starlet	1.3L L4 F/I	33-2094	
Supra	3.0L L6 F/I	33-2054	HP-1002
T100	2.7L L4 F/I	33-2064	HP-1002
T100	3.4L V6 F/I	33-2064 ♦	HP-1002
Tacoma	2.4L L4 F/I	33-2050-1 ♦	HP-1002
Tacoma	2.7L L4 F/I	33-2050-1 ♦	HP-1002
Tacoma	3.4L V6 F/I	33-2054 ♦	HP-1002
Tercel	1.5L L4 F/I	33-2094	HP-1003

Vehicle	Engine Type	Air Filter	Oil Filter
1996 TOYOTA			
4 Runner	2.7L L4 F/I	33-2050-1 ♦	HP-1002
4 Runner	3.0L V6 DSL	E-9270	
4 Runner	3.4L V6 F/I	33-2054 ♦	HP-1002
Avalon	3.0L V6 F/I	33-2052	HP-1002
Camry	2.2L L4 F/I	33-2052	HP-1003
Camry	3.0L V6 F/I	33-2052	HP-1002
Celica	1.8L L4 F/I		HP-1003
Celica	1.8L L4 F/I - US	33-2052 ♦	HP-1003
Celica	2.0L L4 F/I	33-2052 ♦	
Celica	2.2L L4 F/I	33-2052	HP-1003
Corolla	1.3L L4 F/I - Exc., 72BHP	33-2671	
Corolla	1.6L L4 F/I	33-2672 ♦	HP-1003
Corolla	1.8L L4 F/I	33-2672	HP-1003
Corolla	2.0L L4 DSL	33-2030	
HiAce IV	2.4L L4 DSL	38-9203	
HiAce IV	2.4L L4 F/I	38-9203	
Hilux	3.0L L5 DSL	E-2444	
Land Cruiser	2.4L L4 DSL	E-2417	
Land Cruiser	3.0L L4 DSL	E-2233	
Land Cruiser	3.4L L4 DSL	E-2440	
Land Cruiser	3.4L L4 F/I	33-2054	
Land Cruiser	4.2L L6 DSL	E-2443	
Land Cruiser	4.5L L6 F/I	E-2443	HP-3001
Lexcen	3.8L V6 F/I	33-2031-2	HP-1007
MR2	2.0L L4 F/I	33-2030 ♦	
Paseo	1.5L L4 F/I	33-2094	HP-1003
Previa	2.4L L4 F/I	33-2050-1	HP-1002
RAV4	2.0L L4 F/I	33-2163	HP-1003
RAV4 I	2.0L L4 F/I - 129BHP	33-2030 ♦	
Starlet	1.3L L4 F/I - OHC, 4EFE Eng., EP91	33-2634	
Supra	3.0L L6 F/I	33-2054	HP-1002
T100	2.7L L4 F/I	33-2064	HP-1002
T100	3.4L V6 F/I	33-2064 ♦	HP-1002
Tacoma	2.4L L4 F/I	33-2050-1 ♦	HP-1002
Tacoma	2.7L L4 F/I	33-2050-1 ♦	HP-1002
Tacoma	3.4L V6 F/I	33-2054 ♦	HP-1002
Tercel	1.5L L4 F/I	33-2094	HP-1003
1995 TOYOTA			
4 Runner	2.4L L4 F/I	33-2050-1 ♦	HP-1002
4 Runner	2.7L L4 F/I	33-2050-1	HP-1002
4 Runner	3.0L V6 DSL	E-9270	
4 Runner	3.0L V6 F/I	E-2605-1 ♦	HP-1002
4 Runner	3.4L V6 F/I	33-2054	HP-1002
Avalon	3.0L V6 F/I	33-2052	HP-1002
Camry	2.2L L4 F/I	33-2052	HP-1003
Camry	3.0L V6 F/I	33-2052	HP-1002
Celica	1.8L L4 F/I		HP-1003
Celica	1.8L L4 F/I - US	33-2052 ♦	HP-1003
Celica	2.0L L4 F/I	33-2052 ♦	
Celica	2.2L L4 F/I	33-2052	HP-1003
Corolla	1.3L L4 F/I - 72BHP	E-9106	
Corolla	1.3L L4 F/I - Exc., 72BHP	33-2671	
Corolla	1.6L L4 F/I	33-2672 ♦	HP-1003
Corolla	1.8L L4 F/I	33-2672	HP-1003
Corolla	2.0L L4 DSL	33-2030	
HiAce IV	2.4L L4 DSL	38-9203	
HiAce IV	2.4L L4 F/I	38-9203	
Hilux	2.4L L4 DSL	E-2487	
Hilux	2.4L L4 F/I	33-2050-1	
Hilux	3.0L L5 DSL	E-2444	
Land Cruiser	2.4L L4 DSL	E-2417	
Land Cruiser	3.0L L4 DSL	E-2440	

*Indicates 2 filters required ♦ - Intake kit available - see page 80 Applications updated daily at knfilters.com

Vehicle	Engine Type	Air Filter	Oil Filter
1995 TOYOTA			
Land Cruiser	3.4L L4 DSL	E-2440	
Land Cruiser	4.2L L6 DSL	E-2443	
Land Cruiser	4.5L L6 F/I	E-2443	HP-3001
Lexcen	3.8L V6 F/I	33-2031-2	HP-1007
MR2	2.0L L4 F/I	33-2030 ♦	HP-1003
MR2	2.2L L4 F/I	33-2030	HP-1003
Paseo	1.5L L4 F/I	33-2094	HP-1003
Pickup	2.4L L4 F/I	33-2050-1 ♦	HP-1002
Pickup	3.0L V6 F/I	E-2605-1 ♦	HP-1002
Previa	2.4L L4 F/I	33-2050-1	HP-1002
Supra	3.0L L6 F/I	33-2054	HP-1002
		33-2054 ♦	HP-1002
T100	2.7L L4 F/I	33-2064	HP-1002
T100	3.4L V6 F/I	33-2064 ♦	HP-1002
Tacoma	2.4L L4 F/I	33-2050-1 ♦	HP-1002
Tacoma	2.7L L4 F/I	33-2050-1 ♦	HP-1002
Tacoma	3.4L V6 F/I	33-2054 ♦	HP-1002
Tercel	1.5L L4 F/I	33-2094	HP-1003
1994 TOYOTA			
4 Runner	2.4L L4 F/I	33-2050-1 ♦	HP-1002
4 Runner	3.0L V6 DSL	E-9270	
4 Runner	3.0L V6 F/I	E-2605-1 ♦	HP-1002
Camry	2.2L L4 F/I	33-2052	HP-1003
Camry	3.0L V6 F/I	33-2052	HP-1002
Celica	1.8L L4 F/I		HP-1003
Celica	1.8L L4 F/I - US	33-2052 ♦	HP-1003
Celica	2.0L L4 F/I - from 3/94	33-2052 ♦	
Celica	2.0L L4 F/I - to 2/94	33-2030 ♦	
Celica	2.2L L4 F/I	33-2052	HP-1003
Corolla	1.3L L4 F/I - 72BHP	E-9106	
Corolla	1.3L L4 F/I - Exc., 72BHP	33-2671	
Corolla	1.6L L4 F/I	33-2672 ♦	HP-1003
Corolla	1.8L L4 F/I	33-2672	HP-1003
Corolla	2.0L L4 DSL	33-2030	
Hilux	2.4L L4 DSL	E-2487	
Hilux	2.4L L4 F/I	33-2050-1	
Hilux	3.0L L5 DSL	E-2444	
Land Cruiser	2.4L L4 CARB	38-9207	
Land Cruiser	2.4L L4 DSL	E-2417	
Land Cruiser	3.0L L4 DSL	E-2440	
Land Cruiser	3.4L L4 DSL	E-2440	
Land Cruiser	4.2L L6 DSL	E-2443	
Land Cruiser	4.5L L6 F/I	E-2443	HP-3001
Lexcen	3.8L V6 F/I	33-2031-2	HP-1007
MR2	2.0L L4 F/I	33-2030 ♦	HP-1003
MR2	2.2L L4 F/I	33-2030	HP-1003
Paseo	1.5L L4 F/I	33-2094	HP-1003
Pickup	2.4L L4 F/I	33-2050-1 ♦	HP-1002
Pickup	3.0L V6 F/I	E-2605-1 ♦	HP-1002
Previa	2.4L L4 F/I	33-2050-1	HP-1002
Supra	3.0L L6 F/I	33-2054	HP-1002
		33-2054 ♦	HP-1002
T100	2.7L L4 F/I	33-2064	HP-1002
T100	3.0L V6 F/I	33-2064	HP-1002
Tercel	1.5L L4 F/I	33-2094	HP-1003
1993 TOYOTA			
4 Runner	2.4L L4 F/I	33-2050-1 ♦	HP-1002
4 Runner	3.0L V6 DSL	E-9270	
4 Runner	3.0L V6 F/I	E-2605-1 ♦	HP-1002
Camry	2.2L L4 F/I	33-2052	HP-1003
Camry	3.0L V6 F/I	33-2052	HP-1002
Celica	1.6L L4 F/I	33-2041-1	HP-1003

Vehicle	Engine Type	Air Filter	Oil Filter
1993 TOYOTA			
Celica	2.0L L4 F/I	33-2030 ♦	HP-1003
Celica	2.2L L4 F/I	33-2030	HP-1003
Corolla	1.3L L4 F/I - 72BHP	E-9106	
Corolla	1.3L L4 F/I - Exc., 72BHP	33-2671	
Corolla	1.6L L4 F/I	33-2672	HP-1003
Corolla	1.6L L4 F/I - 105BHP AE92, 125BHP	33-2030 ♦	HP-1003
Corolla	1.6L L4 F/I - 105BHP AE95, 116BHP	33-2041-1 ♦	HP-1003
Corolla	1.6L L4 F/I - 114/115BHP	33-2672 ♦	HP-1003
Corolla	1.8L L4 DSL	33-2030	
Corolla	1.8L L4 F/I	33-2672	HP-1003
Hilux	2.4L L4 DSL	E-2487	
Hilux	2.4L L4 F/I	33-2050-1	
Hilux	3.0L L5 DSL	E-2444	
Land Cruiser	2.4L L4 CARB	38-9207	
Land Cruiser	2.4L L4 DSL	E-2417	
Land Cruiser	3.0L L4 DSL	E-2440	
Land Cruiser	3.4L L4 DSL	E-2440	
Land Cruiser	4.2L L6 DSL	E-2443	
Land Cruiser	4.5L L6 F/I	E-2443	HP-3001
Lexcen	3.8L V6 F/I	33-2031-2	HP-1007
MR2	2.0L L4 F/I	33-2030 ♦	HP-1003
MR2	2.2L L4 F/I	33-2030	HP-1003
Paseo	1.5L L4 F/I	33-2094	HP-1003
Pickup	2.4L L4 F/I	33-2050-1 ♦	HP-1002
Pickup	3.0L V6 F/I	E-2605-1 ♦	HP-1002
Previa	2.4L L4 F/I	33-2050-1	HP-1002
Supra	3.0L L6 F/I	33-2054	HP-1002
		33-2054 ♦	HP-1002
Supra	3.0L L6 F/I - From 5/93	33-2054	HP-1002
Supra	3.0L L6 F/I - to 4/93	E-2605-1	HP-1002
T100	3.0L V6 F/I	33-2064	HP-1002
Tercel	1.5L L4 F/I	33-2094	HP-1003
1992 TOYOTA			
4 Runner	2.4L L4 F/I	33-2050-1 ♦	HP-1002
4 Runner	3.0L V6 F/I	E-2605-1 ♦	HP-1002
Camry	2.2L L4 F/I	33-2052	HP-1003
Camry	3.0L V6 F/I	33-2052	HP-1002
Celica	1.6L L4 F/I	33-2041-1	HP-1003
Celica	2.0L L4 F/I	33-2030 ♦	HP-1003
Celica	2.2L L4 F/I	33-2030	HP-1003
Corolla	1.3L L4 CARB	E-9106	
Corolla	1.3L L4 F/I - 72BHP	E-9106	
Corolla	1.3L L4 F/I - Exc., 72BHP	33-2671	
Corolla	1.6L L4 CARB	E-9107	HP-1003
Corolla	1.6L L4 F/I	33-2030	HP-1003
Corolla	1.6L L4 F/I - 105BHP AE92, 125BHP	33-2030 ♦	HP-1003
Corolla	1.6L L4 F/I - 105BHP AE95, 116BHP	33-2041-1 ♦	HP-1003
Corolla	1.6L L4 F/I - 114/115BHP	33-2672 ♦	HP-1003
Corolla	1.6L L4 F/I - 90BHP	E-9107 ♦	HP-1003
Corolla	1.8L L4 DSL	33-2030	
Corolla	1.8L L4 F/I	33-2672	
Corolla	2.0L L4 DSL	33-2030	
Cressida	3.0L L6 F/I	E-2605-1	HP-1002
Hilux	2.4L L4 DSL	E-2487	
Hilux	2.4L L4 F/I	33-2050-1	
Hilux	3.0L L5 DSL	E-2444	
Land Cruiser	2.4L L4 CARB	38-9207	
Land Cruiser	2.4L L4 DSL	E-2417	
Land Cruiser	3.4L L4 DSL	E-2440	

*Indicates 2 filters required ♦ - Intake kit available - see page 80 Applications updated daily at knfilters.com

1992 TOYOTA

Vehicle	Engine Type	Air Filter	Oil Filter
Land Cruiser	4.0L L6 F/I	E-2440	HP-3001
Land Cruiser	4.2L L6 DSL	E-2443	
Land Cruiser	4.5L L6 F/I	E-2443	HP-3001
Lexcen	3.8L V6 F/I	33-2031-2	HP-1007
MR2	2.0L L4 F/I	33-2030 ♦	HP-1003
MR2	2.2L L4 F/I	33-2030	HP-1003
Paseo	1.5L L4 F/I	33-2094	HP-1003
Pickup	2.4L L4 F/I	33-2050-1 ♦	HP-1002
Pickup	3.0L V6 F/I	E-2605-1 ♦	HP-1002
Previa	2.4L L4 F/I	33-2050-1	HP-1002
Supra	3.0L L6 F/I	E-2605-1 ♦	HP-1002
Tercel	1.5L L4 F/I	33-2094	HP-1003

1991 TOYOTA

Vehicle	Engine Type	Air Filter	Oil Filter
4 Runner	2.4L L4 F/I	33-2050-1 ♦	HP-1002
4 Runner	3.0L V6 F/I	E-2605-1 ♦	HP-1002
Camry	2.0L L4 DSL	33-2030	
Camry	2.0L L4 F/I	33-2533	HP-1003
Camry	2.2L L4 F/I	33-2052	
Camry	2.5L V6 F/I	33-2030	HP-1002
Camry	3.0L V6 F/I	33-2052	
Celica	1.6L L4 F/I	33-2041-1	HP-1003
Celica	2.0L L4 F/I	33-2030 ♦	HP-1003
Celica	2.2L L4 F/I	33-2041-1	HP-1003
Corolla	1.3L L4 CARB	E-9106	
Corolla	1.6L L4 CARB	E-9107	HP-1003
Corolla	1.6L L4 F/I	33-2030	HP-1003
Corolla	1.6L L4 F/I - 105BHP AE92, 125BHP	33-2030 ♦	HP-1003
Corolla	1.6L L4 F/I - 105BHP AE95, 116BHP	33-2041-1 ♦	HP-1003
Corolla	1.6L L4 F/I - 90BHP	E-9107 ♦	HP-1003
Corolla	1.8L L4 DSL	33-2030	
Corolla GTS	1.6L L4 F/I	33-2041-1	HP-1003
Cressida	3.0L L6 F/I	E-2605-1	HP-1002
Hilux	2.4L L4 DSL	E-2487	
Hilux	2.4L L4 F/I	33-2050-1	
Land Cruiser	2.4L L4 CARB	38-9207	
Land Cruiser	2.4L L4 DSL	E-2417	
Land Cruiser	3.4L L4 DSL	E-2440	
Land Cruiser	4.0L L6 F/I	E-2440	HP-3001
Land Cruiser	4.2L L6 DSL	E-2443	
Lexcen	3.8L V6 F/I	33-2031-2	HP-1007
MR2	2.0L L4 F/I	33-2030 ♦	HP-1003
MR2	2.2L L4 F/I	33-2030	HP-1003
Paseo	1.5L L4 F/I	33-2094	HP-1003
Pickup	2.4L L4 F/I	33-2050-1 ♦	HP-1002
Pickup	3.0L V6 F/I	E-2605-1 ♦	HP-1002
Previa	2.4L L4 F/I	33-2050-1	HP-1002
Starlet	1.3L L4 F/I	33-2728	
Supra	3.0L L6 F/I	E-2605-1 ♦	HP-1002
Tercel	1.5L L4 F/I	33-2094	HP-1003

1990 TOYOTA

Vehicle	Engine Type	Air Filter	Oil Filter
4 Runner	2.4L L4 F/I	33-2050-1 ♦	HP-1002
4 Runner	3.0L V6 F/I	E-2605-1 ♦	HP-1002
Camry	2.0L L4 DSL	33-2030	
Camry	2.0L L4 F/I	33-2533	HP-1003
Camry	2.5L V6 F/I	33-2030	HP-1002
Celica	1.6L L4 F/I	33-2041-1	HP-1003
Celica	2.0L L4 F/I	33-2030 ♦	HP-1003
Celica	2.2L L4 F/I	33-2041-1	HP-1003
Corolla	1.3L L4 CARB	E-9106	
Corolla	1.6L L4 CARB	E-9107	HP-1003
Corolla	1.6L L4 F/I	33-2030	HP-1003

1990 TOYOTA

Vehicle	Engine Type	Air Filter	Oil Filter
Corolla	1.6L L4 F/I - 105BHP AE92, 125BHP	33-2030 ♦	HP-1003
Corolla	1.6L L4 F/I - 116BHP, 105BHP AE95	33-2041-1 ♦	HP-1003
Corolla	1.6L L4 F/I - 90BHP	E-9107 ♦	HP-1003
Corolla	1.8L L4 DSL	33-2030	
Corolla GTS	1.6L L4 F/I	33-2041-1	HP-1003
Cressida	3.0L L6 F/I	E-2605-1	HP-1002
Hilux	2.4L L4 DSL	E-2487	
Hilux	2.4L L4 F/I	33-2050-1	
Land Cruiser	2.4L L4 CARB	38-9207	
Land Cruiser	2.4L L4 DSL	E-2417	
Land Cruiser	3.4L L4 DSL	E-2440	
Land Cruiser	4.0L L6 F/I	E-2440	HP-3001
Land Cruiser	4.2L L6 DSL	E-2443	
Lexcen	3.8L V6 F/I	33-2031-2	HP-1007
MR2	1.6L L4 F/I	E-2605-1 ♦	
MR2	2.0L L4 F/I	33-2030 ♦	
Pickup	2.4L L4 CARB	E-2820	HP-1002
Pickup	2.4L L4 F/I	33-2050-1 ♦	HP-1002
Pickup	3.0L V6 F/I	E-2605-1 ♦	HP-1002
Previa	2.4L L4 F/I	33-2050-1	
Starlet	1.3L L4 F/I - Non-US, OHC, Turbo	33-2634	
Supra	3.0L L6 F/I	E-2605-1 ♦	HP-1002
Tercel	1.5L L4 CARB	E-9106	HP-1003
Tercel	1.5L L4 F/I		HP-1003

1989 TOYOTA

Vehicle	Engine Type	Air Filter	Oil Filter
4 Runner	2.4L L4 F/I	33-2009 ♦	HP-1002
4 Runner	3.0L V6 F/I	E-2605-1 ♦	HP-1002
Camry	2.0L L4 DSL	33-2030	
Camry	2.0L L4 F/I	33-2533	HP-1003
Camry	2.5L V6 F/I	33-2030	HP-1002
Celica	1.6L L4 F/I	33-2533	
Celica	2.0L L4 F/I	33-2030 ♦	HP-1003
Celica All Trac	2.0L L4 F/I	33-2030 ♦	HP-1002
Celica GTS	2.0L L4 F/I	33-2030 ♦	HP-1003
Corolla	1.3L L4 CARB	E-9106	
Corolla	1.6L L4 CARB	E-9107	HP-1003
Corolla	1.6L L4 F/I	33-2041-1	HP-1003
Corolla	1.6L L4 F/I - 105BHP AE95, 116BHP, 125BHP To 7/89	33-2041-1 ♦	HP-1003
Corolla	1.6L L4 F/I - 90BHP	E-9107 ♦	HP-1003
Corolla	1.6L L4 F/I - From 8/89 125BHP, 105BHP AE92	33-2030 ♦	HP-1003
Corolla	1.8L L4 DSL	33-2030	
Cressida	3.0L L6 F/I	E-2605-1	HP-1002
Hilux	2.4L L4 DSL	E-2487	
Hilux	2.4L L4 F/I	33-2050-1	
Land Cruiser	2.4L L4 CARB	38-9207	
Land Cruiser	2.4L L4 DSL	E-2417	
Land Cruiser	3.4L L4 DSL	E-2440	
Land Cruiser	4.0L L6 DSL	E-2440	
Land Cruiser	4.0L L6 F/I	E-2440	HP-3001
Lexcen	3.8L V6 F/I	33-2031-2	HP-1007
MR2	1.6L L4 F/I	E-2605-1 ♦	HP-1003
Pickup	2.4L L4 CARB	E-2820	HP-1002
Pickup	2.4L L4 F/I	33-2050-1 ♦	HP-1002
Pickup	3.0L V6 F/I	E-2605-1 ♦	HP-1002
Supra	3.0L L6 F/I	E-2605-1 ♦	HP-1002
Tercel	1.5L L4 CARB	E-9106	HP-1003
Van	2.2L L4 F/I	33-2009	HP-1002

1988 TOYOTA

Vehicle	Engine Type	Air Filter	Oil Filter
4 Runner	2.4L L4 F/I	33-2009 ♦	HP-1002

*Indicates 2 filters required ♦ - Intake kit available - see page 80 Applications updated daily at knfilters.com

Vehicle	Engine Type	Air Filter	Oil Filter
1988 TOYOTA			
4 Runner	3.0L V6 F/I	E-2605-1 ♦	HP-1002
Camry	2.0L L4 DSL	33-2030	
Camry	2.0L L4 F/I	33-2533	HP-1003
Celica	1.6L L4 F/I	33-2533	
Celica	2.0L L4 F/I	33-2030	HP-1003
Celica All Trac	2.0L L4 F/I	33-2030	HP-1002
Celica GTS	2.0L L4 F/I	33-2030	HP-1003
Corolla	1.6L L4 F/I	33-2041-1	HP-1003
Corolla	1.6L L4 F/I - 90BHP	E-9107 ♦	HP-1003
Corolla	1.6L L4 F/I - Exc., 90BHP	33-2041-1 ♦	HP-1003
Corolla DLX	1.6L L4 CARB	E-9107	HP-1003
Corolla FX	1.6L L4 CARB	E-2690	HP-1003
Corolla LE	1.6L L4 CARB	E-9107	HP-1003
Corolla SR5	1.6L L4 CARB	E-9107	HP-1003
Cressida	2.8L L6 F/I	E-2605-1	HP-1002
Hilux	2.4L L4 DSL	E-2487	
Land Cruiser	2.4L L4 DSL	E-2417	
Land Cruiser	3.4L L4 DSL	E-2440	
Land Cruiser	4.0L L6 DSL	E-2440	
Land Cruiser	4.0L L6 F/I	E-2440	HP-3001
Land Cruiser	4.2L L6 CARB	E-2940	HP-3001
MR2	1.6L L4 F/I	E-2605-1 ♦	HP-1003
Pickup	2.4L L4 CARB	E-2820	HP-1002
Pickup	2.4L L4 F/I	33-2009 ♦	HP-1002
Pickup	3.0L V6 F/I	E-2605-1 ♦	HP-1002
Supra	3.0L L6 F/I	E-2605-1 ♦	HP-1002
1987 TOYOTA			
4 Runner	2.4L L4 F/I	33-2009	HP-1002
Camry	2.0L L4 DSL	33-2030	
Camry	2.0L L4 F/I	33-2533	HP-1003
Celica	1.6L L4 CARB - 40mm High	E-2690	
Celica	1.6L L4 F/I	33-2533	
Celica	2.0L L4 F/I	33-2030	HP-1003
Celica GTS	2.0L L4 F/I	33-2030	HP-1003
Corolla	1.6L L4 CARB	E-2690	HP-1003
		E-9106	HP-1003
Corolla	1.6L L4 F/I	33-2533 ♦	HP-1003
Corolla	1.6L L4 F/I - 90BHP	E-9107 ♦	HP-1003
Corolla	1.6L L4 F/I - Exc., 90BHP	33-2041-1 ♦	HP-1003
Corolla Sport GTS	1.6L L4 F/I		HP-1003
Cressida	2.8L L6 F/I	E-2605-1	HP-2004
Hilux	2.2L L4 CARB	E-2640	
Land Cruiser	2.4L L4 CARB	38-9207	
Land Cruiser	2.4L L4 DSL	E-2417	
Land Cruiser	3.4L L4 DSL	E-2440	
Land Cruiser	4.0L L6 DSL	E-2440	
Land Cruiser	4.2L L6 CARB	E-2940	HP-3001
MR2	1.6L L4 F/I	E-2605-1 ♦	HP-1003
Pickup	2.4L L4 CARB	E-2820	HP-1002
Pickup	2.4L L4 F/I	33-2009	HP-1002
Supra	3.0L L6 F/I	E-2605-1 ♦	
Supra	3.0L L6 F/I - exc. Turbo	E-2605-1	HP-2004
Supra	3.0L L6 F/I - Turbo	E-2605-1	HP-1002
Tercel	1.5L L4 1 BBL.	E-9106	HP-1003
Tercel	1.5L L4 2 BBL.	E-2690	HP-1003
Van	2.2L L4 F/I	33-2009	HP-1002
1986 TOYOTA			
4 Runner	2.4L L4 F/I		HP-2004
4 Runner	2.4L L4 F/I - exc. Turbo	E-2820	HP-2004
4 Runner	2.4L L4 F/I - Turbo	33-2009	HP-2004
Camry	2.0L L4 DSL	33-2030	

Vehicle	Engine Type	Air Filter	Oil Filter
1986 TOYOTA			
Camry	2.0L L4 F/I	33-2533	HP-1003
Celica GT	2.0L L4 F/I	33-2030	HP-1003
Celica GTS	2.0L L4 F/I	33-2030	HP-1003
Corolla	1.3L L4 CARB	E-9106	
Corolla	1.6L L4 CARB	E-2690	HP-1003
Corolla	1.6L L4 F/I		HP-1003
Corolla	1.8L L4 DSL	33-2030	
Cressida	2.8L L6 F/I	E-2605-1	HP-2004
Land Cruiser	2.4L L4 CARB	38-9207	
Land Cruiser	2.4L L4 DSL	E-2417	
Land Cruiser	3.4L L4 DSL	E-2440	
Land Cruiser	4.0L L6 DSL	E-2440	
Land Cruiser	4.2L L6 CARB	E-2940	HP-3001
MR2	1.6L L4 F/I	E-2485	HP-1003
MR2	1.6L L4 F/I - Non-US, from 4/86	E-2605-1 ♦	HP-1003
MR2	1.6L L4 F/I - Non-US, to 3/86	E-2485 ♦	HP-1003
Pickup	2.4L L4 CARB	E-2820	HP-2004
Pickup	2.4L L4 DSL		HP-3001
Pickup	2.4L L4 F/I	33-2009	HP-2004
Supra	2.8L L6 F/I	E-2487	HP-2004
Supra	3.0L L6 F/I	E-2605-1 ♦	HP-1002
Tercel	1.5L L4 CARB	E-2690	HP-1003
1985 TOYOTA			
4 Runner	2.4L L4 F/I		HP-2004
4 Runner	2.4L L4 F/I - exc. Turbo	E-2820	HP-2004
4 Runner	2.4L L4 F/I - Turbo	33-2009	HP-2004
Camry	2.0L L4 F/I	33-2533	HP-1003
Celica	1.6L L4 CARB - 40mm High	E-2690	
Celica	1.6L L4 CARB - 56mm High	E-2370	
Celica	1.6L L4 F/I	33-2533	
Celica	2.0L L4 CARB - 57mm High	E-2610	
Celica	2.0L L4 CARB - 70mm High	E-2488	
Celica	2.0L L4 F/I	33-2030	
Celica	2.4L L4 F/I	E-2487	HP-2004
Celica	2.8L L6 F/I	E-2487	HP-2004
Corolla	1.3L L4 CARB	E-9106	
Corolla	1.6L L4 CARB	E-2690	HP-1003
Corolla	1.6L L4 F/I		HP-1003
Corolla	1.8L L4 DSL	33-2030	
Cressida	2.8L L6 F/I	E-2605-1	HP-2004
Hilux	2.0L L4 F/I	E-2610	
Land Cruiser	2.4L L4 CARB	38-9207	
Land Cruiser	2.4L L4 DSL	E-2417	
Land Cruiser	3.4L L4 DSL	E-2440	
Land Cruiser	4.0L L6 DSL	E-2440	
Land Cruiser	4.2L L6 CARB	E-2940	HP-3001
MR2	1.6L L4 F/I	E-2485 ♦	HP-1003
Pickup	2.4L L4 CARB	E-2820	HP-2004
Pickup	2.4L L4 DSL - exc. Turbo	E-2220	HP-3001
Pickup	2.4L L4 DSL - Turbo	E-2487	HP-3001
Pickup	2.4L L4 F/I	33-2009	HP-2004
Supra	2.8L L6 F/I	E-2487	
1984 TOYOTA			
4 Runner	2.4L L4 CARB	E-2820	HP-1002
Celica	2.4L L4 F/I	E-2487	HP-2004
Celica	2.8L L6 F/I	E-2487	HP-2004
Corolla	1.6L L4 CARB	E-2690	HP-1003
Land Cruiser	2.4L L4 CARB	38-9207	
Land Cruiser	2.4L L4 DSL	E-2417	

*Indicates 2 filters required ♦ - Intake kit available - see page 80 Applications updated daily at knfilters.com

Vehicle	Engine Type	Air Filter	Oil Filter
1984 TOYOTA			
Land Cruiser	3.0L L4 DSL	E-2440	
Land Cruiser	3.4L L4 DSL	E-2440	
Land Cruiser	4.0L L6 DSL	E-2440	
Land Cruiser	4.2L L6 CARB	E-2940	HP-3001
Pickup	2.4L L4 CARB	E-2820	HP-2004
Pickup	2.4L L4 DSL	E-2220	HP-3001
Pickup	2.4L L4 F/I	33-2009	HP-2004
Supra	2.8L L6 F/I	E-2487	
Van	2.0L L4 F/I	33-2009	HP-2005
1983 TOYOTA			
Celica	2.4L L4 CARB	E-2820	HP-2004
Celica	2.4L L4 F/I	E-2487	HP-2004
Celica	2.8L L6 F/I	E-2487	HP-3001
Corolla	1.6L L4 CARB - 110BHP	E-2488	
Corolla	1.6L L4 CARB - US	E-2690	HP-1003
Land Cruiser	3.0L L4 DSL	E-2440	
Land Cruiser	3.4L L4 DSL	E-2440	
Land Cruiser	4.0L L6 DSL	E-2440	
Land Cruiser	4.2L L6 CARB	E-2940	HP-3001
Pickup	2.2L L4 DSL	E-2220	HP-3001
Pickup	2.4L L4 CARB	E-2820	HP-2004
Supra	2.8L L6 F/I	E-2487	
1982 TOYOTA			
Celica	1.6L L4 CARB - 56mm High	E-2370	
Celica	2.8L L6 F/I	E-2487	HP-2004
Corolla	1.8L L4 CARB	E-2760	HP-2004
Land Cruiser	3.0L L4 DSL	E-2440	
Land Cruiser	3.4L L4 DSL	E-2440	
Land Cruiser	4.0L L6 DSL	E-2440	
Land Cruiser	4.2L L6 CARB	E-2940	HP-3001
Pickup	2.2L L4 DSL	E-2220	HP-3001
Pickup	2.4L L4 CARB	E-2820	HP-2004
Supra	2.8L L6 F/I	E-2487	
1981 TOYOTA			
Celica	2.8L L6 F/I	E-2487	HP-2004
Corolla	1.8L L4 CARB	E-2760	HP-2004
Land Cruiser	3.4L L4 DSL	E-2440	
Land Cruiser	4.2L L6 CARB	E-2940	HP-3001
Pickup	2.2L L4 DSL	E-2220	HP-3001
Pickup	2.4L L4 CARB	E-2820	HP-2004
Starlet	1.3L L4 CARB	E-2370	HP-2005
Supra	2.8L L6 F/I	E-2487	
1980 TOYOTA			
Celica	1.6L L4 CARB - 56mm High	E-2370	
Celica	2.2L L4 CARB	E-2820	HP-2004
Celica	2.6L L6 F/I	E-2487	HP-2004
Corolla	1.8L L4 CARB		HP-2004
Land Cruiser	4.2L L6 CARB	E-2940	HP-3001
Pickup	2.2L L4 CARB	E-2820	HP-2004
1979 TOYOTA			
Land Cruiser	3.0L L4 DSL	E-2440	
Land Cruiser	4.2L L6 CARB	E-2940	HP-3001
Pickup	135 L4 CARB	E-2820	HP-2004
1978 TOYOTA			
Land Cruiser	3.0L L4 DSL	E-2440	
Land Cruiser	4.2L L6 CARB	E-2940	HP-3001
Pickup	135 L4 CARB	E-2820	HP-2004
1977 TOYOTA			
Celica	2.0L L4 CARB - 57mm High	E-2610	
Celica	2.0L L4 CARB - 70mm High	E-2488	
Land Cruiser	3.0L L4 DSL	E-2440	
Land Cruiser	3.6L L6 DSL	E-2440	
Land Cruiser	4.2L L6 CARB	E-2940	HP-3001
Pickup	135 L4 CARB	E-2820	HP-2004
1976 TOYOTA			
Celica	2.0L L4 CARB	E-2760	
Corolla	1.6L L4 CARB	E-2640	HP-2004
Land Cruiser	4.2L L6 CARB	E-2940	HP-3001
1975 TOYOTA			
Land Cruiser	3.0L L4 DSL	E-2440	
Land Cruiser	3.6L L6 DSL	E-2440	
Land Cruiser	4.2L L6 CARB	E-2940	HP-3001
1974 TOYOTA			
Land Cruiser	238 L6 CARB	E-2440	HP-3001
Land Cruiser	3.0L L4 DSL	E-2440	
1973 TOYOTA			
Land Cruiser	238 L6 CARB	E-2440	HP-3001
1972 TOYOTA			
Land Cruiser	238 L6 CARB	E-2440	HP-3001
1971 TOYOTA			
Celica	113 L4 CARB	E-2760	HP-2005
Land Cruiser	238 L6 CARB	E-2440	HP-3001
1970 TOYOTA			
Land Cruiser	238 L6 CARB	E-2440	HP-3001
1969 TOYOTA			
Land Cruiser	238 L6 CARB	E-2440	HP-3001
2013 TRIUMPH			
Bonneville T100	865	TB-9004	KN-204
		TB-9004	KN-204C
Rocket III Roadster	2294	TB-2204	KN-204
		TB-2204	KN-204C
Speed Triple	1050	TB-1011	KN-204
		TB-1011	KN-204C
Speed Triple R	1050	TB-1011	KN-204
		TB-1011	KN-204C
Thunderbird	1699	TB-1610	KN-204
		TB-1610	KN-204C
Tiger 800XC	799	TB-8011	KN-204
		TB-8011	KN-204C
2012 TRIUMPH			
America	865	TB-8002	KN-204
		TB-8002	KN-204C
Bonneville	865	TB-9004	KN-204
		TB-9004	KN-204C
Bonneville SE	865	TB-9004	KN-204
		TB-9004	KN-204C
Bonneville T100	865	TB-9004	KN-204
		TB-9004	KN-204C
Daytona 675	671	TB-6706	KN-204
		TB-6706	KN-204C
Daytona 675R	671	TB-6706	KN-204
		TB-6706	KN-204C
Rocket III Roadster	2294	TB-2204	KN-204
		TB-2204	KN-204C
Rocket III Touring	2294	TB-2204	KN-204
		TB-2204	KN-204C

*Indicates 2 filters required ♦ - Intake kit available - see page 80 Applications updated daily at knfilters.com

Vehicle	Engine Type	Air Filter	Oil Filter
2012 TRIUMPH			
Scrambler	865	TB-9004	KN-204
		TB-9004	KN-204C
Speed Triple	1050	TB-1011	KN-204
		TB-1011	KN-204C
Speed Triple	675		KN-204
			KN-204C
Speed Triple R	1050	TB-1011	KN-204
		TB-1011	KN-204C
Speed Triple R	675		KN-204
			KN-204C
Speedmaster	865	TB-8002	KN-204
		TB-8002	KN-204C
Sprint GT	1050	TB-1005	KN-204
		TB-1005	KN-204C
Street Triple	671	TB-6706	
Street Triple R	671	TB-6706	
Thruxton	865	TB-9004	KN-204
		TB-9004	KN-204C
Thunderbird	1597	TB-1610	KN-204
		TB-1610	KN-204C
Thunderbird	1699	TB-1610	KN-204
		TB-1610	KN-204C
Tiger 800	799	TB-8011	KN-204
		TB-8011	KN-204C
Tiger 800XC	799	TB-8011	KN-204
		TB-8011	KN-204C
Tiger 1050	1050	TB-1005	KN-204
		TB-1005	KN-204C
Tiger 1050 SE	1050	TB-1005	KN-204
		TB-1005	KN-204C
2011 TRIUMPH			
America Motorcycle	865	TB-8002	KN-204
		TB-8002	KN-204C
Bonneville Motorcycle	865	TB-9004	KN-204
		TB-9004	KN-204C
Bonneville SE	865	TB-9004	KN-204
		TB-9004	KN-204C
Bonneville T100	865	TB-9004	KN-204
		TB-9004	KN-204C
Daytona 675	671	TB-6706	KN-204
		TB-6706	KN-204C
Daytona 675R	671	TB-6706	KN-204
		TB-6706	KN-204C
Rocket III Roadster	2294	TB-2204	KN-204
		TB-2204	KN-204C
Rocket III Touring	2294	TB-2204	KN-204
		TB-2204	KN-204C
Scrambler Motorcycle	865	TB-9004	KN-204
		TB-9004	KN-204C
Speed Triple	1050	TB-1011	KN-204
		TB-1011	KN-204C
Speed Triple R	675		KN-204
			KN-204C
Speedmaster	865	TB-8002	KN-204
		TB-8002	KN-204C
Sprint GT	1050	TB-1005	KN-204
		TB-1005	KN-204C
Sprint ST	1050		KN-204
			KN-204C
Street Triple	671	TB-6706	KN-204
		TB-6706	KN-204C
Street Triple R	671	TB-6706	KN-204
		TB-6706	KN-204C
2011 TRIUMPH			
Thruxton	865	TB-9004	KN-204
		TB-9004	KN-204C
Thunderbird	1597	TB-1610	KN-204
		TB-1610	KN-204C
Thunderbird	1699	TB-1610	KN-204
		TB-1610	KN-204C
Tiger 800	799	TB-8011	KN-204
		TB-8011	KN-204C
Tiger 1050	1050	TB-1005	KN-204
		TB-1005	KN-204C
Tiger 1050 SE	1050	TB-1005	KN-204
		TB-1005	KN-204C
2010 TRIUMPH			
America Motorcycle	865	TB-8002	KN-204
		TB-8002	KN-204C
Bonneville	865	TB-9004	KN-204
		TB-9004	KN-204C
Bonneville SE	865	TB-9004	KN-204
		TB-9004	KN-204C
Bonneville T100	865	TB-9004	KN-204
		TB-9004	KN-204C
Daytona 675	671	TB-6706	KN-204
		TB-6706	KN-204C
Rocket III	2294	TB-2204	KN-204
		TB-2204	KN-204C
Rocket III Classic	2294		KN-204
			KN-204C
Rocket III Roadster	2294	TB-2204	KN-204
		TB-2204	KN-204C
Rocket III Touring	2294	TB-2204	KN-204
		TB-2204	KN-204C
Scrambler Motorcycle	865	TB-9004	KN-204
		TB-9004	KN-204C
Speed Triple	1050	TB-1005	KN-204
		TB-1005	KN-204C
Speedmaster	865	TB-8002	KN-204
		TB-8002	KN-204C
Sprint ST	1050	TB-1005	KN-204
		TB-1005	KN-204C
Street Triple	671	TB-6706	KN-204
		TB-6706	KN-204C
Street Triple R	671	TB-6706	KN-204
		TB-6706	KN-204C
Thruxton	865	TB-9004	KN-204
		TB-9004	KN-204C
Thunderbird	1597	TB-1610	KN-204
		TB-1610	KN-204C
Thunderbird	1700		KN-204
			KN-204C
Tiger	1050	TB-1005	KN-204
		TB-1005	KN-204C
Tiger 1050 SE	1050		KN-204
			KN-204C
2009 TRIUMPH			
America Motorcycle	865	TB-8002	KN-204
		TB-8002	KN-204C
Bonneville	865	TB-9004	KN-204
		TB-9004	KN-204C
Bonneville SE	865	TB-9004	KN-204
		TB-9004	KN-204C
Bonneville T100	865	TB-9004	KN-204
		TB-9004	KN-204C
Daytona 675	671	TB-6706	KN-204

Vehicle	Engine Type	Air Filter	Oil Filter
2009 TRIUMPH			
Daytona 675	671	TB-6706	KN-204C
Daytona 675 SE	671	TB-6706	KN-204
		TB-6706	KN-204C
Rocket III	2294	TB-2204	KN-204
		TB-2204	KN-204C
Rocket III Classic	2294	TB-2204	KN-204
		TB-2204	KN-204C
Rocket III Touring	2294	TB-2204	KN-204
		TB-2204	KN-204C
Scrambler Motorcycle	865	TB-9004	KN-204
		TB-9004	KN-204C
Speed Triple	1050	TB-1005	KN-204
		TB-1005	KN-204C
Speed Triple	675		KN-204
			KN-204C
Speedmaster	865	TB-8002	KN-204
		TB-8002	KN-204C
Sprint ST	1050	TB-1005	KN-204
		TB-1005	KN-204C
Street Triple	671	TB-6706	KN-204
		TB-6706	KN-204C
Street Triple R	671	TB-6706	KN-204
		TB-6706	KN-204C
Thruxton	865	TB-9004	KN-204
		TB-9004	KN-204C
Tiger	1050	TB-1005	KN-204
		TB-1005	KN-204C
Tiger 1050 SE	1050		KN-204
			KN-204C
2008 TRIUMPH			
America Motorcycle	865	TB-8002	KN-204
		TB-8002	KN-204C
Bonneville	865	TB-9004	KN-204
		TB-9004	KN-204C
Bonneville Black	865		KN-204
			KN-204C
Bonneville T100	865	TB-9004	KN-204
		TB-9004	KN-204C
Daytona 675	671	TB-6706	KN-204
		TB-6706	KN-204C
Daytona 675 SE	671	TB-6706	KN-204
		TB-6706	KN-204C
Rocket III	2294	TB-2204	KN-204
		TB-2204	KN-204C
Rocket III Classic	2294	TB-2204	KN-204
		TB-2204	KN-204C
Rocket III Touring	2294	TB-2204	KN-204
		TB-2204	KN-204C
Scrambler Motorcycle	865	TB-9004	KN-204
		TB-9004	KN-204C
Speed Triple	1050	TB-1005	KN-204
		TB-1005	KN-204C
Speedmaster	865	TB-8002	KN-204
		TB-8002	KN-204C
Sprint ST	1050	TB-1005	KN-204
		TB-1005	KN-204C
Street Triple	671	TB-6706	KN-204
		TB-6706	KN-204C
Thruxton	865	TB-9004	KN-204
		TB-9004	KN-204C
Tiger	1050	TB-1005	KN-204
		TB-1005	KN-204C
Tiger 1050 SE	1050		KN-204
			KN-204C
2008 TRIUMPH			
Tiger 1050 SE	1050		KN-204C
2007 TRIUMPH			
America Motorcycle	865	TB-8002	KN-204
		TB-8002	KN-204C
Bonneville	865	TB-9004	KN-204
		TB-9004	KN-204C
Bonneville Black	865		KN-204
			KN-204C
Bonneville T100	865	TB-9004	KN-204
		TB-9004	KN-204C
Daytona 675	671	TB-6706	KN-204
		TB-6706	KN-204C
Rocket III	2294	TB-2204	KN-204
		TB-2204	KN-204C
Rocket III Classic	2294	TB-2204	KN-204
		TB-2204	KN-204C
Scrambler Motorcycle	865	TB-9004	KN-204
		TB-9004	KN-204C
Speed Triple	1050	TB-1005	KN-204
		TB-1005	KN-204C
Speedmaster	865	TB-8002	KN-204
		TB-8002	KN-204C
Sprint ST	1050	TB-1005	KN-204
		TB-1005	KN-204C
Thruxton	865	TB-9004	KN-204
		TB-9004	KN-204C
Tiger	1050	TB-1005	KN-204
		TB-1005	KN-204C
Tiger 1050 SE	1050		KN-204
			KN-204C
2006 TRIUMPH			
America Motorcycle	865	TB-8002	KN-204
		TB-8002	KN-204C
Bonneville 800	865	TB-9004	KN-204
		TB-9004	KN-204C
Bonneville T100	865	TB-9004	KN-204
		TB-9004	KN-204C
Daytona 675	671	TB-6706	KN-204
		TB-6706	KN-204C
Daytona 955i	955	TB-9002	KN-204
		TB-9002	KN-204C
Rocket III	2294	TB-2204	KN-204
		TB-2204	KN-204C
Rocket III Classic	2294	TB-2204	KN-204
		TB-2204	KN-204C
Scrambler Motorcycle	865	TB-9004	KN-204
		TB-9004	KN-204C
Speed Four	596	TB-6000	KN-204
		TB-6000	KN-204C
Speed Triple	1050	TB-1005	KN-204
		TB-1005	KN-204C
Speedmaster	865	TB-8002	KN-204
		TB-8002	KN-204C
Sprint ST	1050	TB-1005	KN-204
		TB-1005	KN-204C
Thruxton	865	TB-9004	KN-204
		TB-9004	KN-204C
Tiger	956	TB-9097	KN-204
		TB-9097	KN-204C
2005 TRIUMPH			
America Motorcycle	865	TB-8002	KN-204
		TB-8002	KN-204C

*Indicates 2 filters required ♦ - Intake kit available - see page 80 Applications updated daily at knfilters.com

Vehicle	Engine Type	Air Filter	Oil Filter
2005 TRIUMPH			
Bonneville 800	800	TB-9004	KN-204
		TB-9004	KN-204C
Bonneville T100	865	TB-9004	KN-204
		TB-9004	KN-204C
Daytona 650	650	TB-6000	KN-204
		TB-6000	KN-204C
Daytona 955i	956	TB-9002	KN-204
		TB-9002	KN-204C
Rocket III	2294	TB-2204	KN-204
		TB-2204	KN-204C
Speed Four	596	TB-6000	KN-204
		TB-6000	KN-204C
Speed Triple	1050	TB-1005	KN-204
		TB-1005	KN-204C
Speedmaster	800	TB-8002	KN-204
		TB-8002	KN-204C
Speedmaster	865	TB-8002	KN-204
		TB-8002	KN-204C
Sprint ST	1050	TB-1005	KN-204
		TB-1005	KN-204C
Thruxton	865	TB-9004	KN-204
		TB-9004	KN-204C
Tiger	956	TB-9097	KN-204
		TB-9097	KN-204C
2004 TRIUMPH			
America	800		KN-191
America Motorcycle	865	TB-8002	KN-204
		TB-8002	KN-204C
Bonneville 800	800	TB-9004	KN-191
Bonneville T100	800	TB-9004	KN-191
Daytona 600	600	TB-6000	KN-204
		TB-6000	KN-204C
Daytona 955i	956	TB-9002	KN-191
Speed Four	596	TB-6000	KN-191
Speed Triple	956	TB-9002	KN-191
Speedmaster	800	TB-8002	KN-204
		TB-8002	KN-204C
Sprint RS	956	TB-9002	KN-191
Sprint ST	956	TB-9002	KN-191
Thruxton	865	TB-9004	KN-204
		TB-9004	KN-204C
Tiger	956	TB-9097	KN-191
2003 TRIUMPH			
America Motorcycle	800	TB-8002	KN-191
Bonneville 800	800	TB-9004	KN-191
Bonneville T100	800	TB-9004	KN-191
Daytona 955i	956	TB-9002	KN-191
Speed Four	600	TB-6000	KN-191
Speed Triple	956	TB-9002	KN-191
Speedmaster	800	TB-8002	KN-204
		TB-8002	KN-204C
Sprint RS	956	TB-9002	KN-191
Sprint ST	956	TB-9002	KN-191
Tiger	956	TB-9097	KN-191
Trophy 1200	1179	TB-9091	KN-192
2002 TRIUMPH			
America Motorcycle	800		KN-191
Bonneville 800	800	TB-9004	KN-191
Bonneville America	800	TB-8002	KN-191
Bonneville T100	800	TB-9004	KN-191
Daytona 955i	956	TB-9002	KN-191
Speed Triple	956	TB-9002	KN-191
Speed Triple T509	955	TB-9002	
Sprint RS	956	TB-9002	KN-191
Sprint ST	956	TB-9002	KN-191
Thunderbird	885	TB-9095	KN-192
Thunderbird Sport	900	TB-9095	KN-192
Tiger	956	TB-9097	KN-191
Trophy 1200	1179	TB-9091	KN-192
TT600	596	TB-6000	KN-191
2001 TRIUMPH			
Bonneville 800	800	TB-9004	KN-191
Daytona 955i	956	TB-9097	KN-191
Legend TT	885	TB-9095	KN-192
Speed Triple	956	TB-9097	KN-191
Speed Triple T509	955	TB-9097	
Sprint RS	956	TB-9097	KN-191
Sprint ST	956	TB-9097	KN-191
Thunderbird	885	TB-9095	KN-192
Thunderbird Sport	900	TB-9095	KN-192
Tiger	956	TB-9097	KN-191
Trophy 1200	1179	TB-9091	KN-192
TT600	596	TB-6000	KN-191
2000 TRIUMPH			
Adventurer 900	885	TB-9095	KN-192
Daytona 955i	956	TB-9097	KN-191
Legend TT	885	TB-9095	KN-192
Speed Triple	956	TB-9097	KN-191
Speed Triple T509	955	TB-9097	
Sprint RS	956	TB-9097	
Sprint ST	956	TB-9097	
Thunderbird	885	TB-9095	KN-192
Thunderbird Sport	885	TB-9095	KN-192
Tiger	885	TB-9097	KN-192
Trophy 900	885	TB-9091	KN-192
Trophy 1200	1179	TB-9091	KN-192
TT600	596	TB-6000	KN-191
1999 TRIUMPH			
Adventurer 900	885	TB-9095	KN-192
Daytona 955i	956	TB-9097	KN-191
Legend TT	885	TB-9095	KN-192
Speed Triple T509	955	TB-9097	
Sprint RS	956	TB-9097	
Sprint ST	956	TB-9097	
Thunderbird	885	TB-9095	KN-192
Thunderbird Sport	885	TB-9095	KN-192
Tiger	885	TB-9097	KN-192
Trophy 1200	1179	TB-9091	KN-192
1998 TRIUMPH			
Adventurer 900	885	TB-9095	KN-192
Daytona T595	955	TB-9097	KN-191
Speed Triple T509	885	TB-9097	KN-191
Sprint 900	900	TB-9091	KN-192
Sprint Sports 900	900		KN-401
Thunderbird	885	TB-9095	KN-192
Thunderbird Sport	885	TB-9095	KN-192
Tiger	885	TB-9091	KN-192
Trident 900	885	TB-9091	KN-192
Trophy 900	885	TB-9091	KN-192
Trophy 1200	1179	TB-9091	KN-192
1997 TRIUMPH			
Adventurer 900	885	TB-9095	KN-192
Daytona 1200	1179	TB-9091	KN-192

*Indicates 2 filters required ♦ - Intake kit available - see page 80 Applications updated daily at knfilters.com

Vehicle	Engine Type	Air Filter	Oil Filter
1997 TRIUMPH			
Daytona T595	955	TB-9097	KN-191
Speed Triple T509	885	TB-9097	KN-191
Sprint 900	885	TB-9091	KN-192
Thunderbird Sport	900	TB-9095	KN-192
Tiger	885	TB-9091	KN-192
Trident 900	885	TB-9091	KN-192
Trophy 900	885	TB-9091	KN-192
Trophy 1200	1179	TB-9091	KN-192
1996 TRIUMPH			
Adventurer 900	885	TB-9095	KN-192
Daytona 900	885	TB-9091	KN-192
Daytona 1200	1179	TB-9091	KN-192
Daytona Super III	900	TB-9091	KN-192
Speed Triple	885	TB-9091	KN-192
Sprint 900	885	TB-9091	KN-192
Thunderbird	885	TB-9095	KN-192
Thunderbird Sport	900	TB-9095	KN-192
Tiger	885	TB-9091	KN-192
Trident 900	885	TB-9091	KN-192
Trophy 900	885	TB-9091	KN-192
Trophy 1200	1179	TB-9091	KN-192
1995 TRIUMPH			
Daytona 900	885	TB-9091	KN-192
Daytona 1200	1179	TB-9091	KN-192
Daytona Super III	900	TB-9091	KN-192
Speed Triple	885	TB-9091	KN-192
Thunderbird	885	TB-9095	KN-192
Thunderbird Sport	900	TB-9095	KN-192
Tiger	885	TB-9091	KN-192
Trident 900	885	TB-9091	KN-192
Trophy 900	885	TB-9091	KN-192
1994 TRIUMPH			
Daytona 1200	1179	TB-9091	KN-192
Trident 900	885	TB-9091	KN-192
1981 TRIUMPH			
TR7	2.0L L4 CARB	33-2522	
1980 TRIUMPH			
Spitfire	1.5L L4 CARB - Engines Fitted w/ 3/4 in Filter Adaptor Stud		HP-2004
TR7	2.0L L4 CARB	33-2522	
TR8	3.5L V8 CARB		HP-2004
1979 TRIUMPH			
Spitfire	1.5L L4 CARB - Engines Fitted w/ 3/4 in Filter Adaptor Stud		HP-2004
TR7	2.0L L4 CARB - Calif.	E-2420	
TR7	2.0L L4 CARB - exc. Calif	33-2522	
1978 TRIUMPH			
Spitfire	1.5L L4 CARB - Engines Fitted w/ 3/4 in Filter Adaptor Stud		HP-2004
TR7	2.0L L4 CARB - exc. Calif	33-2522	
1977 TRIUMPH			
Spitfire	1.5L L4 CARB - Engines Fitted w/ 3/4 in Filter Adaptor Stud		HP-2004
TR7	2.0L L4 1 BBL. - Calif.	E-2420	
TR7	2.0L L4 1 BBL. - exc. Calif	33-2522	
1976 TRIUMPH			
Spitfire	1.5L L4 CARB - Engines Fitted w/ 3/4 in Filter Adaptor Stud		HP-2004
TR6	2.0L L6 CARB	E-2540	
TR7	2.0L L4 CARB - Calif.	E-2420	
TR7	2.0L L4 CARB - exc. Calif	33-2522	
1975 TRIUMPH			
Spitfire	1.5L L4 CARB - Engines Fitted w/ 3/4 in Filter Adaptor Stud		HP-2004
Stag	3.0L V8 2 BBL.	33-2011	
TR7	2.0L L4 CARB - exc. Calif	33-2522	
1974 TRIUMPH			
Spitfire	1.5L L4 CARB - Engines Fitted w/ 3/4 in Filter Adaptor Stud		HP-2004
1973 TRIUMPH			
Spitfire	1.5L L4 CARB - Engines Fitted w/ 3/4 in Filter Adaptor Stud		HP-2004
1972 TRIUMPH			
Spitfire	1.3L L4 CARB - Engines Fitted w/ 3/4 in Filter Adaptor Stud		HP-2004
Stag	3.0L V8 CARB	33-2011	
1971 TRIUMPH			
Spitfire	1.3L L4 CARB - Engines Fitted w/ 3/4 in Filter Adaptor Stud		HP-2004
TR6	2.5L L6 F/I	E-9108	
1970 TRIUMPH			
Herald	1200	E-3180	
Spitfire	1.3L L4 CARB - Engines Fitted w/ 3/4 in Filter Adaptor Stud		HP-2004
TR6	2.5L L6 CARB	E-9108	
1969 TRIUMPH			
Herald	1200	E-3180	
TR6	152 L6 CARB	E-2540	
TR6	2.5L L6 F/I	E-9108	
1968 TRIUMPH			
Herald	1200	E-3180	
1967 TRIUMPH			
Herald	1200	E-3180	
1966 TRIUMPH			
Herald	1200	E-3180	
1965 TRIUMPH			
Herald	1200	E-3180	
1963 TRIUMPH			
Herald	1200	E-3180	
Spitfire	70 L4 CARB - Engines Fitted w/ 3/4 in Filter Adaptor Stud		HP-2004
1962 TRIUMPH			
Herald	70 L4 CARB	E-3180	
2012 VAUXHALL			
Antara	2.2L L4 DSL	33-2956	
Astra MK6	1.6L L4 F/I - exc. Turbo	33-2964	
2011 VAUXHALL			
Insignia	2.0L L4 DSL	33-2962	
Insignia	2.0L L4 F/I	33-2962	

*Indicates 2 filters required ♦ - Intake kit available - see page 80 Applications updated daily at knfilters.com

Vehicle	Engine Type	Air Filter	Oil Filter
2011 VAUXHALL			
Insignia	2.8L V6 F/I	33-2962	
2010 VAUXHALL			
Insignia	2.0L L4 DSL	33-2962	
Insignia	2.0L L4 F/I	33-2962	
2009 VAUXHALL			
Insignia	2.0L L4 DSL	33-2962	
Insignia	2.0L L4 F/I	33-2962	
2008 VAUXHALL			
Astra MK5	1.8L L4 F/I	33-2787 ♦	
2006 VAUXHALL			
Agila	1.0L L3 F/I	33-2242	
Astra MK5	1.4L L4 F/I	33-2787 ♦	
2005 VAUXHALL			
Astra MK5	1.4L L4 F/I	33-2787 ♦	
Astra MK5	1.9L L4 DSL	33-2213 ♦	
Corsa MK2	1.3L L4 DSL	33-2212 ♦	
Corsa MK2	1.8L L4 F/I	33-2212 ♦	
2003 VAUXHALL			
Astra Mk4	2.2L L4 F/I	33-2213 ♦	HP-7000
Signum	2.2L L4 DSL	33-2848	
Signum	2.2L L4 F/I	33-2848 ♦	HP-7000
2002 VAUXHALL			
Astra Mk4	1.6L L4 F/I	33-2787 ♦	
Corsa MK2	1.2L L4 F/I	33-2212 ♦	
1998 VAUXHALL			
Corsa MK1	1.4L L4 F/I	33-2098 ♦	
Frontera	2.3L L4 DSL	33-2013	
1994 VAUXHALL			
Frontera	2.4L L4 F/I	33-2013	
1991 VAUXHALL			
Nova	1.4L L4 F/I - 82BHP	33-2547 ♦	
Nova	1.6L L4 F/I	33-2547 ♦	
2013 VICTORY			
Hammer 8 Ball	1731	PL-1608	KN-198
High-Ball	1731	PL-1608	KN-198
Vegas 8-Ball	1731	PL-1608	KN-198
2012 VICTORY			
Cross Country	1731		KN-198
Cross Country Cory Ness	1731		KN-198
Cross Country Tour	1731		KN-198
Cross Roads	1731		KN-198
Hammer 8 Ball	1731	PL-1608	KN-198
Hammer S	1731	PL-1608	KN-198
High-Ball	1731	PL-1608	KN-198
Kingpin	1731	PL-1608	KN-198
Vegas	1731	PL-1608	KN-198
Vegas 8-Ball	1731	PL-1608	KN-198
Vegas Jackpot	1731	PL-1608	KN-198
Vegas Zach Ness	1731	PL-1608	KN-198
Vision Arlen Ness	1731		KN-198
Vision Tour	1731		KN-198
2011 VICTORY			
Cross Country	1731		KN-198
Cross Roads	1731		KN-198
Hammer	1731	PL-1608	KN-198
Hammer 8 Ball	1731	PL-1608	KN-198
2011 VICTORY			
Hammer S	1731	PL-1608	KN-198
Kingpin	1731	PL-1608	KN-198
Kingpin 8 Ball	1731	PL-1608	KN-198
Vegas	1731	PL-1608	KN-198
Vegas 8-Ball	1731	PL-1608	KN-198
Vegas Jackpot	1731	PL-1608	KN-198
Vegas Zach Ness	1731	PL-1608	KN-198
Victory Vision Arlen Ness	1731		KN-198
Vision 8-Ball	1731		KN-198
Vision Tour	1731		KN-198
2010 VICTORY			
Cross Country	1731		KN-198
Cross Roads	1731		KN-198
Hammer	1731	PL-1608	KN-198
Hammer S	1731	PL-1608	KN-198
Jackpot Cory Ness	1731	PL-1608	KN-198
Kingpin	1634	PL-1608	KN-198
Kingpin 8 Ball	1634	PL-1608	KN-198
Kingpin Low	1634	PL-1608	
Kingpin Tour	1634	PL-1608	
Vegas	1634	PL-1608	KN-198
Vegas 8-Ball	1634	PL-1608	KN-198
Vegas Jackpot	1731	PL-1608	KN-198
Vegas Low	1634	PL-1608	
Victory Vision Arlen Ness	1731		KN-198
Vision 8-Ball	1731		KN-198
Vision Tour	1731		KN-198
2009 VICTORY			
10th Anniversary Victory Vision	1731		KN-198
Hammer	1731	PL-1608	KN-198
Hammer S	1731	PL-1608	KN-198
Jackpot Cory Ness	1731	PL-1608	KN-198
Kingpin	1634	PL-1608	KN-198
Kingpin 8 Ball	1634	PL-1608	KN-198
Kingpin Low	1634	PL-1608	KN-198
Kingpin Tour	1634	PL-1608	KN-198
Vegas	1634	PL-1608	KN-198
Vegas 8-Ball	1634	PL-1608	KN-198
Vegas Jackpot	1731	PL-1608	KN-198
Vegas Low	1634	PL-1608	KN-198
Victory Vision Arlen Ness	1731		KN-198
Vision Street	1731		KN-198
Vision Street Premium	1731		KN-198
Vision Tour	1731		KN-198
2008 VICTORY			
Hammer	1634	PL-1608	KN-198
Hammer S	1634	PL-1608	KN-198
Jackpot Arlen Ness	1634	PL-1608	KN-198
Jackpot Cory Ness	1634	PL-1608	KN-198
Jackpot Ness Signature Series	1634		KN-198
Kingpin	1634	PL-1608	KN-198
Kingpin 8 Ball	1634	PL-1608	KN-198
Kingpin Tour	1634	PL-1608	KN-198
Vegas	1634	PL-1608	KN-198
Vegas 8-Ball	1634	PL-1608	KN-198
Vegas Jackpot	1634	PL-1608	KN-198
Vegas Low	1634	PL-1608	KN-198
Vision Street	1731		KN-198

*Indicates 2 filters required ♦ - Intake kit available - see page 80 Applications updated daily at knfilters.com

Vehicle	Engine Type	Air Filter	Oil Filter
2008 VICTORY			
Vision Tour	1731		KN-198
2007 VICTORY			
Hammer	1634	PL-1500	KN-198
Hammer S	1634	PL-1500	KN-198
Jackpot Ness Signature Series	1634	PL-1500	KN-198
Kingpin	1634	PL-1500	KN-198
Kingpin Tour	1634	PL-1500	KN-198
Vegas	1634	PL-1500	KN-198
Vegas 8-Ball	1634	PL-1500	KN-198
Vegas Jackpot	1634	PL-1500	KN-198
2006 VICTORY			
Hammer	1634	PL-1500	KN-198
Jackpot Ness Signature Series	1634	PL-1500	KN-198
Kingpin	1634	PL-1500	KN-198
Vegas	1634	PL-1500	KN-198
Vegas 8-Ball	1634	PL-1500	KN-198
Vegas Jackpot	1634	PL-1500	KN-198
2005 VICTORY			
Hammer	1634	PL-1500	KN-198
Kingpin	1507	PL-1500	KN-198
Kingpin	1634		KN-198
Kingpin Ness Signature Series	1507	PL-1500	KN-198
Touring Cruiser	1508	PL-1500	KN-198
Vegas	1507	PL-1500	KN-198
Vegas	1634		KN-198
Vegas 8-Ball	1507	PL-1500	KN-198
Vegas Ness Signature Series	1507	PL-1500	KN-198
2004 VICTORY			
Kingpin	1507	PL-1500	KN-198
Kingpin	1634		KN-198
Touring Cruiiser	1508	PL-1500	KN-198
Touring Cruiser	1508	PL-1500	KN-198
Vegas	1507	PL-1500	KN-198
Vegas	1634		KN-198
2003 VICTORY			
Classic Cruiser	1508	PL-1500	KN-198
Touring Cruiiser	1508	PL-1500	KN-198
Touring Cruiser	1508	PL-1500	KN-198
Vegas	1508	PL-1500	KN-198
2002 VICTORY			
Deluxe Cruiser	1508	PL-1500	KN-198
Deluxe Touring Cruiser	1508	PL-1500	KN-198
2001 VICTORY			
V92C	1508	PL-1500	KN-303
		PL-1500	KN-303C
V92C Deluxe	1507	PL-1500	KN-303
		PL-1500	KN-303C
V92SC	1507	PL-1500	KN-303
		PL-1500	KN-303C
2000 VICTORY			
V92C	1508	PL-1500	KN-303
		PL-1500	KN-303C
V92SC	1507	PL-1500	KN-303
		PL-1500	KN-303C

Vehicle	Engine Type	Air Filter	Oil Filter
1999 VICTORY			
V92C	1508	PL-1598	KN-303
		PL-1598	KN-303C
1998 VICTORY			
V92C	1508	PL-1598	
2013 VOLKSWAGEN			
Beetle	2.0L L4 DSL	33-2865 ♦	
Beetle	2.0L L4 F/I	33-2865 ♦	
CC	2.0L L4 DSL	33-2865 ♦	
CC	2.0L L4 F/I	33-2865 ♦	
CC	3.6L V6 F/I	33-2384	
Golf Plus	2.0L L4 DSL	33-2865 ♦	
Golf VI	2.0L L4 DSL	33-2865 ♦	
Golf VI	2.0L L4 F/I - 211BHP	33-2865 ♦	
Golf VI	2.0L L4 F/I - 235/270BHP	33-2888 ♦	
GTI	2.0L L4 F/I	33-2865 ♦	
Jetta	2.0L L4 DSL	33-2865	
Jetta	2.5L L5 F/I	33-2331	
Jetta GLi	2.0L L4 F/I	33-2865	
Jetta S	2.0L L4 F/I	E-2014	
Jetta V	2.0L L4 DSL	33-2865 ♦	
Jetta V	2.0L L4 F/I	33-2865 ♦	
Passat	2.0L L4 DSL	33-2865 ♦	
Passat	2.0L L4 F/I	33-2865 ♦	
Passat	3.6L V6 F/I	33-2384	
Tiguan	2.0L L4 DSL	33-2865 ♦	
Tiguan	2.0L L4 F/I	33-2865 ♦	
Touareg	3.0L V6 DSL	33-2857	
Touareg	3.0L V6 F/I	33-2857	
Touareg	3.6L V6 F/I	33-2857	
2012 VOLKSWAGEN			
Amarok	2.0L L4 DSL	33-2983	
Amarok	2.0L L4 F/I	33-2983	
Beetle	1.2L L4 F/I	E-2014 ♦	
Beetle	1.4L L4 F/I	33-2865 ♦	
Beetle	1.6L L4 DSL	33-2865 ♦	
Beetle	2.0L L4 F/I	33-2865 ♦	
California	2.0L L4 DSL	33-2867	
California	2.0L L4 F/I	33-2867	
CC	2.0L L4 DSL	33-2865 ♦	
CC	2.0L L4 F/I	33-2865 ♦	
CC	3.6L V6 F/I	33-2384	
Eos	2.0L L4 DSL	33-2865 ♦	
Eos	2.0L L4 F/I	33-2865 ♦	
Golf	2.0L L4 DSL - US	33-2865	
Golf	2.0L L4 F/I	33-2888	
Golf Plus	1.4L L4 F/I - 122BHP	E-2014 ♦	
Golf Plus	1.4L L4 F/I - 160BHP	33-2865 ♦	
Golf Plus	1.4L L4 F/I - 80BHP	33-2920 ♦	
Golf Plus	1.6L L4 DSL	33-2865 ♦	
Golf Plus	1.6L L4 F/I	33-2920	
Golf Plus	2.0L L4 DSL	33-2865 ♦	
Golf VI	1.2L L4 F/I	E-2014 ♦	
Golf VI	1.4L L4 F/I - 122BHP	E-2014 ♦	
Golf VI	1.4L L4 F/I - 160BHP	33-2865 ♦	
Golf VI	1.4L L4 F/I - 80BHP	33-2920 ♦	
Golf VI	1.6L L4 DSL	33-2865 ♦	
Golf VI	1.8L L4 F/I	33-2865 ♦	
Golf VI	2.0L L4 DSL	33-2865 ♦	
Golf VI	2.0L L4 F/I - 211BHP	33-2865 ♦	
Golf VI	2.0L L4 F/I - 235/270BHP	33-2888 ♦	
GTI	2.0L L4 F/I	33-2865 ♦	

*Indicates 2 filters required ♦ - Intake kit available - see page 80 Applications updated daily at knfilters.com

2012 VOLKSWAGEN

Vehicle	Engine Type	Air Filter	Oil Filter
Jetta	2.0L L4 DSL	33-2865	
Jetta	2.0L L4 F/I - exc. Turbo	E-2014	HP-2005
Jetta	2.0L L4 F/I - Turbo	33-2865	
Jetta V	1.2L L4 F/I	E-2014 ♦	
Jetta V	1.4L L4 F/I - 122BHP	E-2014 ♦	
Jetta V	1.4L L4 F/I - 160BHP	33-2865 ♦	
Jetta V	1.6L L4 DSL	33-2865 ♦	
Jetta V	2.0L L4 DSL	33-2865 ♦	
Jetta V	2.0L L4 F/I	33-2865 ♦	
Multivan	2.0L L4 DSL	33-2867	
Multivan	2.0L L4 F/I	33-2867	
Passat	1.4L L4 F/I - 122BHP	E-2014 ♦	
Passat	1.4L L4 F/I - 150BHP	33-2865 ♦	
Passat	1.6L L4 DSL	33-2865 ♦	
Passat	1.8L L4 F/I	33-2865 ♦	
Passat	2.0L L4 DSL	33-2865 ♦	
Passat	2.0L L4 F/I	33-2865 ♦	
Passat	3.6L V6 F/I	33-2384	
Passat CC	1.8L L4 F/I	33-2865 ♦	
Passat CC	2.0L L4 DSL	33-2865 ♦	
Passat CC	3.6L V6 F/I	33-2384	
Polo	1.2L L3 DSL	E-2997	
Polo	1.2L L4 F/I - Exc., TSi	33-2830	
Polo	1.2L L4 F/I - TSi	E-2997	
Polo	1.4L L4 F/I - Exc. TSi	33-2920	
Polo	1.4L L4 F/I - TSi, Exc. GTi	E-2997	
Polo	1.6L L4 DSL	E-2997	
Polo	1.6L L4 F/I	33-2920	
Routan	3.6L V6 F/I	33-2462	
Scirocco	1.4L L4 F/I - 122BHP	E-2014 ♦	
Scirocco	1.4L L4 F/I - 160BHP	33-2865 ♦	
Scirocco	2.0L L4 DSL	33-2865 ♦	
Scirocco	2.0L L4 F/I - 211BHP	33-2865 ♦	
Scirocco	2.0L L4 F/I - 265BHP	33-2888 ♦	
Tiguan	2.0L L4 DSL	33-2865 ♦	
Tiguan	2.0L L4 F/I	33-2865 ♦	
Touareg	3.0L V6 DSL	33-2857	
Touareg	3.0L V6 F/I	33-2857	HP-7015
Touareg	3.6L V6 F/I	33-2857	
Up	1.0L L3 F/I	33-2994	

2011 VOLKSWAGEN

Vehicle	Engine Type	Air Filter	Oil Filter
Amarok	2.0L L4 DSL	33-2983	
Amarok	2.0L L4 F/I	33-2983	
Beetle	1.6L L4 DSL	33-2865 ♦	
Beetle	2.0L L4 F/I - from 10/11	33-2865 ♦	
California	2.0L L4 DSL	33-2867	
California	2.0L L4 F/I	33-2867	
CC	2.0L L4 F/I	33-2865 ♦	
CC	3.6L V6 F/I	33-2384	
Golf	2.0L L4 DSL - US	33-2865	
Golf Plus	1.4L L4 F/I - 122BHP	E-2014 ♦	
Golf Plus	1.4L L4 F/I - 160BHP	33-2865 ♦	
Golf Plus	1.4L L4 F/I - 80BHP	33-2920 ♦	
Golf Plus	1.6L L4 DSL	33-2865 ♦	
Golf Plus	1.6L L4 F/I	33-2920	
Golf Plus	2.0L L4 DSL	33-2865 ♦	
Golf VI	1.2L L4 F/I	E-2014 ♦	
Golf VI	1.4L L4 F/I - 122BHP	E-2014 ♦	
Golf VI	1.4L L4 F/I - 160BHP	33-2865 ♦	
Golf VI	1.4L L4 F/I - 80BHP	33-2920 ♦	
Golf VI	1.6L L4 DSL	33-2865 ♦	
Golf VI	1.8L L4 F/I	33-2865 ♦	
Golf VI	2.0L L4 DSL	33-2865 ♦	

2011 VOLKSWAGEN

Vehicle	Engine Type	Air Filter	Oil Filter
Golf VI	2.0L L4 F/I - 211BHP	33-2865 ♦	
Golf VI	2.0L L4 F/I - 235/270BHP	33-2888 ♦	
Golf VI	2.5L L5 F/I	33-2331	
GTI	2.0L L4 F/I	33-2865 ♦	
Jetta	2.0L L4 DSL	33-2865	
Jetta	2.0L L4 F/I	E-2014	HP-2005
Jetta V	1.2L L4 F/I	E-2014 ♦	
Jetta V	1.4L L4 F/I - 122BHP	E-2014 ♦	
Jetta V	1.4L L4 F/I - 160BHP	33-2865 ♦	
Jetta V	1.6L L4 DSL	33-2865 ♦	
Jetta V	1.6L L4 F/I	E-2014 ♦	
Jetta V	2.0L L4 DSL	33-2865 ♦	
Jetta V	2.0L L4 F/I - TFSi	33-2888 ♦	
Jetta V	2.0L L4 F/I - TSi	33-2865 ♦	
Lavida	2.0L L4 F/I	33-2128	
Passat	2.0L L4 DSL	33-2865 ♦	
Passat	2.0L L4 F/I	33-2865 ♦	
Passat	3.6L V6 F/I	33-2384	
Passat CC	2.0L L4 DSL	33-2865 ♦	
Passat CC	3.6L V6 F/I	33-2384	
Polo	1.2L L3 DSL	E-2997	
Polo	1.2L L4 F/I - Exc., TSi	33-2830	
Polo	1.2L L4 F/I - TSi	E-2997	
Polo	1.4L L4 F/I - Exc., TSi	33-2920 ♦	
Polo	1.4L L4 F/I - TSi	E-2997 ♦	
Polo	1.6L L4 DSL	E-2997	
Polo	1.6L L4 F/I	33-2920	
Routan	3.6L V6 F/I	33-2462	
Scirocco	1.4L L4 F/I - 122BHP	E-2014 ♦	
Scirocco	1.4L L4 F/I - 160BHP	33-2865 ♦	
Scirocco	2.0L L4 DSL	33-2865 ♦	
Scirocco	2.0L L4 F/I	33-2865 ♦	
Suran	1.6L L4 F/I - OEM 5Z0129620	33-2830	
Tiguan	2.0L L4 DSL	33-2865 ♦	
Tiguan	2.0L L4 F/I	33-2865 ♦	
Touareg	3.0L V6 DSL	33-2857	
Touareg	3.0L V6 F/I	33-2857	
Touareg	3.6L V6 F/I	33-2857	
Touareg	4.2L V8 F/I	33-2857*	

2010 VOLKSWAGEN

Vehicle	Engine Type	Air Filter	Oil Filter
Beetle	1.4L L4 F/I	33-2774	
Beetle	1.8L L4 F/I	33-2128	
Beetle	1.9L L4 DSL	33-2128	
Beetle	2.0L L4 F/I	33-2128	
CC	2.0L L4 F/I	33-2865 ♦	
CC	3.6L V6 F/I	33-2384	
Crafter	2.5L L5 DSL	33-2391	
Eos	2.0L L4 DSL	33-2865 ♦	
Eos	2.0L L4 F/I	33-2865 ♦	
Gol	1.6L L4 F/I - OEM 5Z0129620	33-2830	
Golf	2.0L L4 DSL - US	33-2865	
Golf Plus	1.4L L4 F/I - 122BHP	E-2014 ♦	
Golf Plus	1.4L L4 F/I - 160BHP	33-2865 ♦	
Golf Plus	1.4L L4 F/I - 80BHP	33-2920 ♦	
Golf Plus	1.6L L4 DSL	33-2865 ♦	
Golf Plus	1.6L L4 F/I	E-2014	
Golf Plus	2.0L L4 DSL	33-2865 ♦	
Golf VI	1.4L L4 F/I - 122BHP	E-2014 ♦	
Golf VI	1.4L L4 F/I - 160BHP	33-2865 ♦	
Golf VI	1.4L L4 F/I - 80BHP	33-2920 ♦	
Golf VI	1.6L L4 DSL	33-2865 ♦	
Golf VI	1.6L L4 F/I	E-2014 ♦	

*Indicates 2 filters required ♦ - Intake kit available - see page 80 Applications updated daily at knfilters.com

Vehicle	Engine Type	Air Filter	Oil Filter
2010 VOLKSWAGEN			
Golf VI	1.8L L4 F/I	33-2865 ♦	
Golf VI	2.0L L4 DSL	33-2865 ♦	
Golf VI	2.0L L4 F/I - 270BHP	33-2888 ♦	
Golf VI	2.0L L4 F/I - Exc. 270BHP	33-2865 ♦	
Golf VI	2.5L L5 F/I	33-2331	
GTI	2.0L L4 F/I	33-2865 ♦	
Jetta	2.0L L4 DSL	33-2865	
Jetta	2.0L L4 F/I	33-2865	
Jetta GLi	2.0L L4 F/I	33-2865 ♦	
Jetta V	1.4L L4 F/I - 122BHP	E-2014 ♦	
Jetta V	1.4L L4 F/I - 140/160/170BHP	33-2865 ♦	
Jetta V	1.6L L4 DSL	33-2865 ♦	
Jetta V	1.6L L4 F/I	E-2014	
Jetta V	2.0L L4 DSL	33-2865 ♦	
Jetta V	2.0L L4 F/I - TFSi	33-2888 ♦	
Jetta V	2.0L L4 F/I - TSi	33-2865 ♦	
Jetta V	2.5L L5 F/I	33-2331	
Lavida	2.0L L4 F/I	33-2128	
Passat	2.0L L4 DSL	33-2865 ♦	
Passat	2.0L L4 F/I	33-2865 ♦	
Passat CC	1.8L L4 F/I	33-2865 ♦	
Passat CC	2.0L L4 DSL	33-2865 ♦	
Passat CC	2.0L L4 F/I	33-2865	
Passat CC	3.6L V6 F/I	33-2384	
Polo	1.2L L3 DSL	E-2997	
Polo	1.2L L4 F/I - Exc., TSi	33-2830	
Polo	1.2L L4 F/I - TSi	E-2997	
Polo	1.4L L4 F/I - Exc., TSi	33-2920 ♦	
Polo	1.4L L4 F/I - TSi	E-2997 ♦	
Polo	1.6L L4 DSL	E-2997	
Routan	3.8L V6 F/I	33-2419	HP-1002
Routan	4.0L V6 F/I	33-2419	HP-1017
Scirocco	1.4L L4 F/I - 122BHP	E-2014 ♦	
Scirocco	1.4L L4 F/I - 160BHP	33-2865 ♦	
Scirocco	2.0L L4 DSL	33-2865 ♦	
Scirocco	2.0L L4 F/I - 270BHP	33-2888 ♦	
Tiguan	2.0L L4 DSL	33-2865 ♦	
Tiguan	2.0L L4 F/I	33-2865 ♦	
Touareg	3.0L V6 DSL	33-2857	
Touareg	3.6L V6 F/I	33-2857	HP-7005
Touareg	4.2L V8 F/I	33-2857*	
Touareg	6.0L W12 F/I	33-2857*	
2009 VOLKSWAGEN			
Beetle	1.8L L4 F/I	33-2128	
Beetle	2.0L L4 F/I	33-2128	
CC	3.6L V6 F/I	33-2384	
Eos	2.0L L4 DSL	33-2865 ♦	
Eos	3.2L V6 F/I	33-2878 ♦	
Gol	1.6L L4 F/I - OEM 5Z0129620	33-2830	
Golf City	2.0L L4 F/I		HP-2005
Golf V	1.6L L4 F/I - 101BHP	33-2920 ♦	
Golf V	1.6L L4 F/I - 102BHP	E-2014 ♦	
Golf V	2.0L L4 DSL	33-2865 ♦	
Golf V	2.0L L4 F/I - 150BHP	E-2014	
Golf V	2.0L L4 F/I - 200BHP	33-2888	
Golf V GTI	2.0L L4 F/I	33-2888	
Golf VI	1.4L L4 F/I - 80BHP	33-2920 ♦	
Golf VI	1.6L L4 DSL	33-2865 ♦	
Golf VI	1.6L L4 F/I	E-2014 ♦	
Golf VI	2.0L L4 DSL	33-2865 ♦	
Golf VI	2.0L L4 F/I - 211BHP	33-2865 ♦	
Golf VI	2.0L L4 F/I - 270BHP	33-2888 ♦	

Vehicle	Engine Type	Air Filter	Oil Filter
2009 VOLKSWAGEN			
Golf VI	2.5L L5 F/I	33-2331	
GTI	2.0L L4 F/I	33-2865 ♦	
Jetta	2.0L L4 DSL	33-2865	
Jetta	2.0L L4 F/I	33-2865	
Jetta City	2.0L L4 F/I	33-2128	HP-2005
Jetta GLi	2.0L L4 F/I	33-2865 ♦	
Jetta V	1.4L L4 F/I	33-2865 ♦	
Jetta V	1.6L L4 DSL	33-2865 ♦	
Jetta V	1.6L L4 F/I - 102BHP	E-2014 ♦	
Jetta V	1.6L L4 F/I - 115BHP	33-2869 ♦	
Jetta V	1.6L L4 F/I - China, Engine Code ACR, ANL	33-2851 ♦	
Jetta V	1.9L L4 DSL	33-2865 ♦	
Jetta V	2.0L L4 DSL	33-2865 ♦	
Jetta V	2.0L L4 F/I - 200BHP	33-2888 ♦	
Jetta V	2.0L L4 F/I - Exc., 200BHP	E-2014 ♦	
Lavida	2.0L L4 F/I	33-2128	
Passat	2.0L L4 DSL	33-2865 ♦	
Passat	3.6L V6 F/I	33-2878	
Passat CC	1.8L L4 F/I	33-2865 ♦	
Passat CC	2.0L L4 DSL	33-2865 ♦	
Passat CC	3.6L V6 F/I	33-2384	
Routan	3.8L V6 F/I		HP-1002
Routan	4.0L V6 F/I		HP-1017
Tiguan	2.0L L4 DSL	33-2865 ♦	
Tiguan	2.0L L4 F/I - Turbo	33-2865 ♦	
Touareg	3.0L V6 DSL	33-2857	
Touareg	3.6L V6 F/I	33-2857	HP-7005
Touareg	4.2L V8 F/I	33-2857*	HP-7005
2008 VOLKSWAGEN			
Beetle	2.0L L4 F/I	33-2128 ♦	
Eos	2.0L L4 DSL	33-2865 ♦	
Eos	3.2L V6 F/I - Non-US	33-2878 ♦	
Eos	3.2L V6 F/I - US	33-2384 ♦	
Golf City	2.0L L4 F/I	33-2128	HP-2005
Golf Plus	2.0L L4 DSL	33-2865 ♦	
Golf V	1.6L L4 F/I - 101BHP	33-2920 ♦	
Golf V	2.0L L4 DSL	33-2865 ♦	
Golf V	3.2L V6 F/I	33-2878 ♦	
Golf VI	1.4L L4 F/I - 80BHP	33-2920 ♦	
Golf VI	2.0L L4 DSL	33-2865 ♦	
Golf VI	2.0L L4 F/I - 211BHP	33-2865 ♦	
Jetta City	2.0L L4 F/I	33-2128	HP-2005
Jetta V	1.4L L4 F/I	33-2865 ♦	
Jetta V	1.6L L4 F/I - 102BHP	E-2014 ♦	
Jetta V	1.6L L4 F/I - 115BHP	33-2869 ♦	
Jetta V	1.6L L4 F/I - China, Engine Code ACR, ANL	33-2851 ♦	
Jetta V	1.9L L4 DSL	33-2865 ♦	
Jetta V	2.0L L4 DSL	33-2865 ♦	
Lavida	2.0L L4 F/I	33-2128	
Passat	1.8L L4 F/I	33-2865 ♦	
Passat	2.0L L4 DSL	33-2865 ♦	
Passat	3.2L V6 F/I	33-2878	
Passat	3.6L V6 F/I - Non-US	33-2878	
Passat	3.6L V6 F/I - US	33-2384	
Passat CC	1.8L L4 F/I	33-2865 ♦	
Passat CC	2.0L L4 DSL	33-2865 ♦	
Passat CC	2.0L L4 F/I	33-2865 ♦	
Passat CC	3.6L V6 F/I	33-2384	
Polo	1.2L L3 F/I - 54/64BHP	33-2830	
Polo	1.4L L3 DSL	33-2830	
Polo	1.4L L4 F/I - 75/101BHP	33-2221 ♦	

*Indicates 2 filters required ♦ - Intake kit available - see page 80 Applications updated daily at knfilters.com

2008 VOLKSWAGEN

Vehicle	Engine Type	Air Filter	Oil Filter
Polo	1.4L L4 F/I - 80BHP	33-2920 ♦	
Polo	1.6L L4 F/I - 105BHP	33-2920 ♦	
R32	3.2L V6 F/I	33-2384	
Touareg	3.0L V6 DSL	33-2857	
Touareg	3.6L V6 F/I	33-2857	HP-7005
Touareg	4.2L V8 F/I	33-2857*	HP-7005
Touareg	5.0L V10 DSL	33-2857*	
Touareg	6.0L W12 F/I	33-2857*	

2007 VOLKSWAGEN

Vehicle	Engine Type	Air Filter	Oil Filter
Beetle	1.4L L4 F/I	33-2774	
Beetle	1.8L L4 F/I	33-2128 ♦	
Beetle	2.0L L4 F/I	33-2128 ♦	
Eos	2.0L L4 DSL	33-2865 ♦	
Eos	3.2L V6 F/I - Non-US	33-2878 ♦	
Eos	3.2L V6 F/I - US	33-2384 ♦	
Golf City	2.0L L4 F/I	33-2128	HP-2005
Golf Plus	1.4L L4 F/I - 80BHP	33-2920 ♦	
Golf Plus	2.0L L4 DSL	33-2865 ♦	
Golf V	1.4L L4 F/I - 75BHP	33-2221 ♦	
Golf V	1.4L L4 F/I - 80BHP	33-2920 ♦	
Golf V	1.6L L4 F/I - 101BHP	33-2920 ♦	
Golf V	2.0L L4 DSL - 75BHP	E-2014 ♦	
Golf V	2.0L L4 DSL - Exc., 75BHP	33-2865 ♦	
Golf V	3.2L V6 F/I	33-2878 ♦	
Jetta City	2.0L L4 F/I	33-2128	HP-2005
Jetta V	1.4L L4 F/I	33-2865 ♦	
Jetta V	1.6L L4 F/I - 102BHP	E-2014 ♦	
Jetta V	1.6L L4 F/I - China, Engine Code ACR, ANL	33-2851 ♦	
Jetta V	1.9L L4 DSL	33-2865 ♦	
Jetta V	2.0L L4 DSL	33-2865 ♦	
Passat	1.8L L4 F/I	33-2865 ♦	
Passat	2.0L L4 DSL	33-2865 ♦	
Passat	3.2L V6 F/I	33-2878	
Passat	3.6L V6 F/I - Non-US	33-2878	
Passat	3.6L V6 F/I - US	33-2384	
Polo	1.4L L3 DSL	33-2830	
Polo	1.4L L4 F/I - 80BHP	33-2920 ♦	
Touareg	3.6L V6 F/I	33-2857	HP-7005
Touareg	4.2L V8 F/I	33-2857*	HP-7005
Touareg	5.0L V10 DSL	33-2857*	
Touareg	6.0L W12 F/I	33-2857*	

2006 VOLKSWAGEN

Vehicle	Engine Type	Air Filter	Oil Filter
Beetle	1.4L L4 F/I	33-2774	
Beetle	1.8L L4 F/I	33-2128 ♦	
Beetle	1.9L L4 DSL	33-2128	
Beetle	2.0L L4 F/I	33-2128 ♦	
Golf	1.9L L4 DSL - US	33-2128	
Golf	2.0L L4 F/I	33-2128	HP-2005
Golf GTI	1.8L L4 F/I	33-2128	HP-2005
Golf Plus	1.4L L4 F/I - 75BHP	33-2221 ♦	
Golf Plus	1.4L L4 F/I - 80BHP	33-2920 ♦	
Golf Plus	1.9L L4 DSL	33-2865 ♦	
Golf Plus	2.0L L4 DSL	33-2865 ♦	
Golf V	1.4L L4 F/I - 140/170BHP	33-2865 ♦	
Golf V	1.4L L4 F/I - 75BHP	33-2221 ♦	
Golf V	1.4L L4 F/I - 80BHP	33-2920 ♦	
Golf V	1.4L L4 F/I - 90BHP	33-2850 ♦	
Golf V	1.6L L4 F/I - 101BHP	33-2920 ♦	
Golf V	1.9L L4 DSL	33-2865 ♦	
Golf V	2.0L L4 DSL - 75BHP	E-2014 ♦	

2006 VOLKSWAGEN

Vehicle	Engine Type	Air Filter	Oil Filter
Golf V	2.0L L4 DSL - Exc., 75BHP	33-2865 ♦	
Golf V	3.2L V6 F/I	33-2878 ♦	
Jetta	1.9L L4 DSL	33-2865	
Jetta City	2.0L L4 F/I		HP-2005
Jetta V	1.4L L4 F/I	33-2865 ♦	
Jetta V	1.6L L4 F/I - 102BHP	E-2014 ♦	
Jetta V	1.6L L4 F/I - 115BHP	33-2869 ♦	
Jetta V	1.6L L4 F/I - China, Engine Code ACR, ANL	33-2851 ♦	
Jetta V	1.9L L4 DSL	33-2865 ♦	
Jetta V	2.0L L4 DSL	33-2865 ♦	
Passat	1.6L L4 F/I - 102BHP	E-2014 ♦	
Passat	1.6L L4 F/I - 115BHP	33-2869 ♦	
Passat	1.9L L4 DSL	33-2865 ♦	
Passat	2.0L L4 DSL	33-2865 ♦	
Passat	3.2L V6 F/I	33-2878	
Passat	3.6L V6 F/I - Non-US	33-2878	
Polo	1.4L L3 DSL	33-2830 ♦	
Polo	1.4L L4 F/I - 75/101BHP	33-2221 ♦	
Polo	1.4L L4 F/I - 80BHP	33-2920 ♦	
Polo	1.6L L4 F/I - 105BHP	33-2920 ♦	
Touareg	2.5L L5 DSL	33-2857	
Touareg	3.0L V6 DSL	33-2857	
Touareg	3.2L V6 F/I	33-2857	HP-7005
Touareg	3.6L V6 F/I	33-2857	HP-7005
Touareg	4.2L V8 F/I	33-2857*	HP-7005
Touareg	5.0L V10 DSL	33-2857*	
Touareg	6.0L W12 F/I	33-2857*	

2005 VOLKSWAGEN

Vehicle	Engine Type	Air Filter	Oil Filter
Beetle	1.4L L4 F/I	33-2774	
Beetle	1.8L L4 F/I	33-2128 ♦	HP-2005
Beetle	1.9L L4 DSL	33-2128	
Beetle	2.0L L4 F/I	33-2128 ♦	HP-2005
Beetle	2.5L L5 F/I	33-2128	
Bora	1.6L L4 F/I - 102/105BHP	33-2221 ♦	
Bora	1.8L L4 F/I	33-2128 ♦	
Golf	1.9L L4 DSL - US	33-2128	
Golf	2.0L L4 F/I	33-2128 ♦	HP-2005
Golf GTI	1.8L L4 F/I	33-2128 ♦	HP-2005
Golf GTI	2.8L V6 F/I	33-2128	
Golf IV	1.6L L4 F/I - 16v	33-2221	
Golf IV	1.6L L4 F/I - 8v	33-2128	
Golf IV	1.8L L4 F/I	33-2128	
Golf IV GTI	1.8L L4 F/I	33-2128	
Golf Plus	1.9L L4 DSL	33-2865 ♦	
Golf Plus	2.0L L4 DSL	33-2865 ♦	
Golf V	1.9L L4 DSL	33-2865 ♦	
Golf V	2.0L L4 DSL - 75BHP	E-2014 ♦	
Golf V	2.0L L4 DSL - Exc., 75BHP	33-2865 ♦	
Jetta	1.8L L4 F/I	33-2128	HP-2005
Jetta	1.9L L4 DSL - BEW Eng.	33-2128	
Jetta	1.9L L4 DSL - BRM Eng.	33-2865	
Jetta	2.0L L4 F/I	33-2128	HP-2005
Jetta	2.8L V6 F/I	33-2128	
Jetta IV	1.6L L4 F/I - China, Engine Code ACR, ANL	33-2851	
Jetta V	1.6L L4 F/I - 102BHP	E-2014 ♦	
Jetta V	1.6L L4 F/I - 115BHP	33-2869 ♦	
Jetta V	1.6L L4 F/I - China, Engine Code ACR, ANL	33-2851 ♦	
Jetta V	1.9L L4 DSL	33-2865 ♦	

*Indicates 2 filters required ♦ - Intake kit available - see page 80 Applications updated daily at knfilters.com

Vehicle	Engine Type	Air Filter	Oil Filter
2005 VOLKSWAGEN			
Jetta V	2.0L L4 DSL	33-2865 ♦	
Passat	1.6L L4 F/I - 102BHP, from 3/05	E-2014 ♦	
Passat	1.6L L4 F/I - To 2/05	33-2125 ♦	
Passat	1.8L L4 F/I	33-2125	HP-3001
Passat	1.9L L4 DSL - 3B Model	33-2125 ♦	
Passat	1.9L L4 DSL - 3C Model	33-2865 ♦	
Passat	2.0L L4 DSL - 3B Model	33-2125 ♦	
Passat	2.0L L4 DSL - 3C Model	33-2865 ♦	
Passat	2.0L L4 F/I - 150BHP, 3C Model	E-2014 ♦	
Passat	2.0L L4 F/I - 200BHP, 3C Model	33-2888 ♦	
Passat	2.0L L4 F/I - 3B Model	33-2125 ♦	
Passat	2.5L V6 DSL	33-2125	
Passat	2.8L V6 F/I	33-2125	HP-2004
Passat	3.2L V6 F/I	33-2878	
Passat	3.6L V6 F/I	33-2878	
Passat	4.0L W8 F/I		HP-7005
Touareg	2.5L L5 DSL	33-2857	
Touareg	3.0L V6 DSL	33-2857	
Touareg	3.2L V6 F/I	33-2857	HP-7005
Touareg	3.6L V6 F/I	33-2857	HP-7005
Touareg	4.2L V8 F/I	33-2857*	HP-7005
Touareg	5.0L V10 DSL	33-2857*	
Touareg	6.0L W12 F/I	33-2857*	
2004 VOLKSWAGEN			
Beetle	1.4L L4 F/I	33-2774	
Beetle	1.6L L4 F/I	33-2128 ♦	
Beetle	1.8L L4 F/I	33-2128 ♦	HP-2005
Beetle	1.9L L4 DSL	33-2128	
Beetle	2.0L L4 F/I	33-2128 ♦	HP-2005
Bora	1.8L L4 F/I	33-2128 ♦	
Bora	1.9L L4 DSL	33-2128 ♦	
Golf	1.9L L4 DSL	33-2128	
Golf	2.0L L4 F/I	33-2128 ♦	HP-2005
Golf GTI	1.8L L4 F/I - US	33-2128 ♦	HP-2005
Golf GTI	2.8L V6 F/I	33-2128 ♦	
Golf IV	1.4L L4 F/I	33-2774 ♦	
Golf IV	1.8L L4 F/I	33-2128 ♦	
Golf IV	1.9L L4 DSL	33-2128 ♦	
Golf IV	2.0L L4 F/I	33-2128 ♦	
Golf IV GTI	1.8L L4 F/I	33-2128 ♦	
Golf IV GTI	1.9L L4 DSL	33-2128 ♦	
Golf Plus	2.0L L4 DSL	33-2865 ♦	
Golf R32	3.2L V6 F/I	33-2128 ♦	
Golf V	1.4L L4 F/I - 75BHP	33-2221 ♦	
Golf V	1.4L L4 F/I - 90BHP	33-2850 ♦	
Golf V	1.9L L4 DSL	33-2865 ♦	
Golf V	2.0L L4 DSL - 75BHP	E-2014 ♦	
Golf V	2.0L L4 DSL - Exc., 75BHP	33-2865 ♦	
Jetta	1.8L L4 F/I	33-2128 ♦	HP-2005
Jetta	1.9L L4 DSL	33-2128	
Jetta	2.0L L4 F/I	33-2128 ♦	HP-2005
Jetta	2.8L V6 F/I	33-2128	
Jetta IV	1.6L L4 F/I - China, Engine Code ACR, ANL	33-2851	
Lupo	1.6L L4 F/I	33-2774 ♦	HP-1002
Passat	1.6L L4 F/I	33-2125	
Passat	1.8L L4 F/I	33-2125	HP-3001
Passat	1.9L L4 DSL	33-2125	
Passat	2.0L L4 DSL - Non-US	33-2125	

Vehicle	Engine Type	Air Filter	Oil Filter
2004 VOLKSWAGEN			
Passat	2.0L L4 F/I	33-2125	
Passat	2.3L V5 F/I	33-2125	HP-7005
Passat	2.5L V6 DSL	33-2125	
Passat	2.8L V6 F/I	33-2125	
Passat	4.0L W8 F/I	33-2125	HP-7005
Phaeton	6.0L W12 F/I		HP-7005
Polo	1.2L L3 F/I - 54BHP	33-2830 ♦	
Touareg	2.5L L5 DSL	33-2857	
Touareg	3.0L V6 DSL	33-2857	
Touareg	3.2L V6 F/I	33-2857	HP-7005
Touareg	4.2L V8 F/I	33-2857*	HP-7005
Touareg	5.0L V10 DSL	33-2857*	
Touareg	6.0L W12 F/I	33-2857*	
2003 VOLKSWAGEN			
Beetle	1.6L L4 F/I	33-2128 ♦	
Beetle	1.8L L4 F/I	33-2128 ♦	HP-2005
Beetle	1.9L L4 DSL	33-2128	
Beetle	2.0L L4 F/I	33-2128 ♦	HP-2005
Bora	1.8L L4 F/I	33-2128 ♦	
Bora	1.9L L4 DSL	33-2128 ♦	
Bora	2.8L V6 F/I	33-2128 ♦	
Eurovan	2.5L L5 F/I		HP-3001
Golf	1.9L L4 DSL	33-2128	
Golf	2.0L L4 F/I - US	33-2128 ♦	HP-2005
Golf GTI	1.8L L4 F/I	33-2128 ♦	
Golf GTI	1.8L L4 F/I - US	33-2128	HP-2005
Golf GTI	2.8L V6 F/I	33-2128	
Golf IV	1.4L L4 F/I	33-2774 ♦	
Golf IV	1.6L L4 F/I - 16v	33-2221 ♦	
Golf IV	1.6L L4 F/I - 8v	33-2128 ♦	
Golf IV	1.8L L4 F/I	33-2128 ♦	
Golf IV	1.9L L4 DSL	33-2128 ♦	
Golf IV	2.0L L4 F/I	33-2128 ♦	
Golf IV	2.8L V6 F/I	33-2128 ♦	
Golf IV	3.2L V6 F/I	33-2128 ♦	
Golf IV GTI	1.8L L4 F/I	33-2128 ♦	
Golf IV GTI	1.9L L4 DSL	33-2128 ♦	
Golf V	1.4L L4 F/I - 75BHP	33-2221 ♦	
Golf V	1.9L L4 DSL	33-2865 ♦	
Golf V	2.0L L4 DSL - 75BHP	E-2014 ♦	
Golf V	2.0L L4 DSL - Exc., 75BHP	33-2865 ♦	
Jetta	1.8L L4 F/I	33-2128 ♦	HP-2005
Jetta	1.9L L4 DSL	33-2128	
Jetta	2.0L L4 F/I	33-2128 ♦	HP-2005
Jetta	2.8L V6 F/I	33-2128	
Jetta IV	1.6L L4 F/I - China, Engine Code ACR, ANL	33-2851	
Passat	1.6L L4 F/I	33-2125	
Passat	1.8L L4 F/I	33-2125	HP-3001
Passat	1.9L L4 DSL	33-2125	
Passat	2.0L L4 DSL	33-2125	
Passat	2.0L L4 F/I	33-2125	
Passat	2.3L V5 F/I	33-2125	HP-7005
Passat	2.5L V6 DSL	33-2125	
Passat	2.8L V6 F/I	33-2125	
Passat	4.0L W8 F/I	33-2125	HP-7005
2002 VOLKSWAGEN			
Beetle	1.4L L4 F/I	33-2774	
Beetle	1.6L L4 F/I	33-2128 ♦	
Beetle	1.8L L4 F/I	33-2128 ♦	HP-2005
Beetle	1.9L L4 DSL	33-2128	
Beetle	2.0L L4 F/I	33-2128 ♦	HP-2005
Beetle	2.3L V5 F/I	33-2128 ♦	

*Indicates 2 filters required ♦ - Intake kit available - see page 80 Applications updated daily at knfilters.com

2002 VOLKSWAGEN

Vehicle	Engine Type	Air Filter	Oil Filter
Bora	1.8L L4 F/I	33-2128 ♦	
Cabrio	2.0L L4 F/I	33-2069	HP-2005
Eurovan	2.8L V6 F/I		HP-7005
Golf	1.9L L4 DSL	33-2128	
Golf	2.0L L4 F/I - US	33-2128 ♦	HP-2005
Golf GTI	1.8L L4 F/I - US	33-2128 ♦	HP-2005
Golf GTI	2.0L L4 F/I	33-2128	
Golf GTI	2.8L V6 F/I	33-2128	HP-7005
Golf IV	1.4L L4 F/I	33-2774 ♦	
Golf IV	1.6L L4 F/I - 16v	33-2221 ♦	
Golf IV	1.8L L4 F/I	33-2128 ♦	
Golf IV	1.9L L4 DSL	33-2128 ♦	
Golf IV	2.0L L4 F/I	33-2128 ♦	
Golf IV	2.3L L5 F/I	33-2128 ♦	
Golf IV	2.8L V6 F/I	33-2128 ♦	HP-7005
Golf IV Cabriolet	1.8L L4 F/I	33-2069	HP-2005
Golf IV GTI	1.8L L4 F/I	33-2128 ♦	
Golf IV GTI	1.9L L4 DSL	33-2128 ♦	
Jetta	1.8L L4 F/I	33-2128 ♦	HP-2005
Jetta	1.9L L4 DSL	33-2128	
Jetta	2.0L L4 F/I	33-2128 ♦	HP-2005
Jetta	2.8L V6 F/I	33-2128	HP-7005
Jetta IV	1.6L L4 F/I - China, Engine Code ACR, ANL	33-2851	
Lupo	1.0L L4 F/I	33-2159	
Passat	1.6L L4 F/I	33-2125	
Passat	1.8L L4 F/I	33-2125	HP-2005
Passat	1.9L L4 DSL	33-2125	
Passat	2.0L L4 F/I	33-2125	
Passat	2.3L V5 F/I	33-2125	HP-7005
Passat	2.5L V6 DSL	33-2125	
Passat	2.8L V6 F/I	33-2125	
Passat	4.0L W8 F/I	33-2125	HP-7005

2001 VOLKSWAGEN

Vehicle	Engine Type	Air Filter	Oil Filter
Beetle	1.4L L4 F/I	33-2774	
Beetle	1.6L L4 F/I	33-2128 ♦	
Beetle	1.8L L4 F/I	33-2128 ♦	HP-2005
Beetle	1.9L L4 DSL	33-2128	
Beetle	2.0L L4 F/I	33-2128 ♦	HP-2005
Bora	1.8L L4 F/I	33-2128 ♦	
Bora	1.9L L4 DSL	33-2128 ♦	
Bora	2.0L L4 F/I	33-2128 ♦	
Bora	2.8L V6 F/I	33-2128 ♦	
Cabrio	2.0L L4 F/I	33-2069	HP-2005
Eurovan	2.8L V6 F/I		HP-7005
Golf	1.8L L4 F/I - US	33-2128 ♦	HP-2005
Golf	1.9L L4 DSL	33-2128	
Golf	2.0L L4 F/I	33-2128 ♦	HP-2005
Golf GTI	1.8L L4 F/I - US	33-2128 ♦	HP-2005
Golf GTI	2.0L L4 F/I	33-2128	HP-2005
Golf GTI	2.8L V6 F/I	33-2128	HP-7005
Golf IV	1.4L L4 F/I	33-2774 ♦	
Golf IV	1.6L L4 F/I - 16v	33-2221 ♦	
Golf IV	1.6L L4 F/I - 8v	33-2128 ♦	
Golf IV	1.8L L4 F/I	33-2128 ♦	
Golf IV	1.9L L4 DSL	33-2128 ♦	
Golf IV	2.0L L4 F/I	33-2128 ♦	
Golf IV	2.3L L5 F/I	33-2128 ♦	
Golf IV	2.8L V6 F/I	33-2128 ♦	HP-7005
Golf IV Cabriolet	1.8L L4 F/I	33-2069	HP-2005
Golf IV GTI	1.8L L4 F/I	33-2128 ♦	
Golf IV GTI	1.9L L4 DSL	33-2128 ♦	
Jetta	1.8L L4 F/I	33-2128 ♦	HP-2005
Jetta	1.9L L4 DSL	33-2128	

2001 VOLKSWAGEN

Vehicle	Engine Type	Air Filter	Oil Filter
Jetta	2.0L L4 F/I	33-2128 ♦	HP-2005
Jetta	2.8L V6 F/I	33-2128	HP-7005
Jetta IV	1.6L L4 F/I - China, Engine Code ACR, ANL	33-2851	
Passat	1.6L L4 F/I	33-2125	
Passat	1.8L L4 F/I	33-2125	HP-3001
Passat	1.9L L4 DSL	33-2125	
Passat	2.0L L4 F/I	33-2125	
Passat	2.3L V5 F/I	33-2125	HP-7005
Passat	2.5L V6 DSL	33-2125	
Passat	2.8L V6 F/I	33-2125	
Passat	4.0L W8 F/I	33-2125	
Polo	1.4L L3 DSL - from 10/01	33-2830 ♦	
Polo	1.4L L4 F/I - Type 6K 75BHP, Type 6N2 75/101 BHP	33-2774 ♦	
Polo	1.4L L4 F/I - Type 6N2 60BHP	33-2159* ♦	
Polo	1.4L L4 F/I - Type 9N 75/101BHP, 86BHP Exc FSI	33-2221 ♦	
Polo	1.6L L4 F/I - Type 6K	33-2649 ♦	
Polo	1.6L L4 F/I - Type 6N	33-2774 ♦	

2000 VOLKSWAGEN

Vehicle	Engine Type	Air Filter	Oil Filter
Beetle	1.6L L4 F/I	33-2128 ♦	
Beetle	1.8L L4 F/I	33-2128	HP-2005
Beetle	1.9L L4 DSL	33-2128	
Beetle	2.0L L4 F/I	33-2128 ♦	HP-2005
Beetle	2.3L V5 F/I	33-2128	
Beetle	3.2L V6 F/I	33-2128	
Bora	2.0L L4 F/I	33-2128 ♦	
Bora	2.8L V6 F/I	33-2128 ♦	
Cabrio	2.0L L4 F/I	33-2069	HP-2005
Eurovan	2.8L V6 F/I	33-2759	HP-7005
Golf	1.8L L4 F/I	33-2128	HP-2005
Golf	1.9L L4 DSL	33-2128	
Golf	2.0L L4 F/I	33-2128 ♦	HP-2005
Golf GTI	1.8L L4 F/I	33-2128	HP-2005
Golf GTI	2.0L L4 F/I	33-2128	HP-2005
Golf GTI	2.8L V6 F/I	33-2128	HP-7005
Golf IV	1.0L L4 F/I	33-2159*	
Golf IV	1.4L L4 F/I	33-2774 ♦	
Golf IV	1.6L L4 F/I - 16v, from 10/00	33-2221 ♦	
Golf IV	1.6L L4 F/I - 16v, to 9/00	33-2774 ♦	
Golf IV	1.6L L4 F/I - 8v	33-2128 ♦	
Golf IV	1.8L L4 F/I	33-2128 ♦	
Golf IV	1.9L L4 DSL	33-2128 ♦	
Golf IV	2.0L L4 F/I	33-2128 ♦	
Golf IV	2.3L L5 F/I	33-2128 ♦	
Golf IV	2.8L V6 F/I	33-2128 ♦	HP-7005
Golf IV Cabriolet	1.8L L4 F/I	33-2069	HP-2005
Golf IV GTI	1.8L L4 F/I	33-2128 ♦	
Jetta	1.8L L4 F/I	33-2128 ♦	HP-2005
Jetta	1.9L L4 DSL	33-2128	
Jetta	2.0L L4 F/I	33-2128 ♦	HP-2005
Jetta	2.8L V6 F/I	33-2128	HP-7005
Jetta IV	1.6L L4 F/I - China, Engine Code ACR, ANL	33-2851	
Passat	1.6L L4 F/I	33-2125	
Passat	1.8L L4 F/I	33-2125 ♦	HP-3001
Passat	2.0L L4 F/I	33-2125	
Passat	2.3L V5 F/I	33-2125 ♦	HP-7005
Passat	2.5L V6 DSL	33-2125	
Passat	2.8L V6 F/I	33-2125 ♦	

*Indicates 2 filters required ♦ - Intake kit available - see page 80 Applications updated daily at knfilters.com

Vehicle	Engine Type	Air Filter	Oil Filter
2000 VOLKSWAGEN			
Polo	1.4L L3 DSL	E-2864 ♦	
Polo	1.4L L4 F/I - Type 6K 60BHP	E-1210 ♦	
Polo	1.4L L4 F/I - Type 6K 75BHP, Type 6N2 75/101 BHP	33-2774 ♦	
Polo	1.4L L4 F/I - Type 6N2 60BHP	33-2159* ♦	
Polo	1.4L L4 F/I - Type 6N2, 54BHP	E-2864 ♦	
1999 VOLKSWAGEN			
Beetle	1.8L L4 F/I	33-2128	HP-2005
Beetle	1.9L L4 DSL	33-2128	
Beetle	2.0L L4 F/I	33-2128 ♦	HP-2005
Cabrio	2.0L L4 F/I	33-2069	HP-2005
Eurovan	2.8L V6 F/I	33-2759	HP-7005
Golf	1.9L L4 DSL	33-2128	
Golf	2.0L L4 F/I	33-2128	HP-2005
Golf GTI	2.0L L4 F/I	33-2128	HP-2005
Golf GTI	2.8L V6 F/I	33-2128	HP-7005
Golf III	1.6L L4 F/I - 75BHP	E-1210	
Golf III	1.8L L4 F/I	33-2069	HP-2005
Golf III	1.9L L4 DSL	33-2069	
Golf III	2.0L L4 F/I	33-2069	HP-2005
Golf IV	1.4L L4 F/I	33-2774 ♦	
Golf IV	1.6L L4 F/I	33-2128 ♦	
Golf IV	1.8L L4 F/I	33-2128 ♦	
Golf IV	1.9L L4 DSL	33-2128 ♦	
Golf IV	2.0L L4 F/I	33-2128 ♦	HP-2005
Golf IV	2.8L V6 F/I	33-2128 ♦	HP-7005
Golf IV Cabriolet	1.8L L4 F/I	33-2069	HP-2005
Golf IV GTI	1.8L L4 F/I	33-2128 ♦	
Jetta	1.9L L4 DSL	33-2128	
Jetta	2.0L L4 F/I		HP-2005
Jetta	2.0L L4 F/I - ABA Eng.	33-2069	HP-2005
Jetta	2.0L L4 F/I - AEG Eng.	33-2128	HP-2005
Jetta	2.8L V6 F/I		HP-7005
Jetta	2.8L V6 F/I - AFP Eng.	33-2128	HP-7005
Jetta IV	1.6L L4 F/I - China, Engine Code ACR, ANL	33-2851	
Passat	1.8L L4 F/I	33-2125 ♦	HP-3001
Passat	1.9L L4 DSL	33-2125 ♦	
Passat	2.3L V5 F/I	33-2125 ♦	HP-7005
Passat	2.5L V6 DSL	33-2125	
Passat	2.8L V6 F/I	33-2125 ♦	
Polo	1.4L L3 DSL	E-2864 ♦	
Polo	1.4L L4 F/I - Type 6K 60BHP, Type 6N 8v	E-1210 ♦	
Polo	1.4L L4 F/I - Type 6K 75BHP, Type 6N 16v, Type 6N2 75/101 BHP	33-2774 ♦	
Polo	1.4L L4 F/I - Type 6N2 60BHP	33-2159* ♦	
Polo	1.4L L4 F/I - Type 6N2, 54BHP	E-2864 ♦	
Polo	1.6L L4 F/I - Type 6N, Exc., 75BHP	33-2774 ♦	
1998 VOLKSWAGEN			
Beetle	1.9L L4 DSL	33-2128	
Beetle	2.0L L4 F/I	33-2128 ♦	HP-2005
Cabrio	2.0L L4 F/I		HP-2005
Golf	1.8L L4 F/I	33-2128	HP-2005
Golf	1.9L L4 DSL		HP-3001
Golf	2.0L L4 F/I	33-2069	HP-2005
Golf GTI	2.8L V6 F/I	33-2069	HP-7005
Golf III	1.8L L4 F/I	33-2069	HP-2005
Golf III	1.9L L4 DSL	33-2069	
Golf III	2.0L L4 F/I	33-2069	HP-2005
Golf III	2.9L V6 F/I	33-2069 ♦	
Golf IV	1.8L L4 F/I	33-2128 ♦	HP-2005
Golf IV	1.9L L4 DSL	33-2128 ♦	
Golf IV	2.0L L4 F/I	33-2128 ♦	HP-2005
Golf IV	2.3L L5 F/I	33-2128 ♦	
Golf IV	2.8L V6 F/I		HP-7005
Golf IV Cabriolet	1.8L L4 F/I	33-2069	HP-2005
Golf IV GTI	1.8L L4 F/I	33-2128	HP-2005
Jetta	1.9L L4 DSL	33-2069	HP-3001
Jetta	2.0L L4 F/I	33-2069	HP-2005
Jetta	2.8L V6 F/I	33-2069	HP-7005
Jetta III	1.6L L4 F/I - China, Engine Code ACR, ANL	33-2851	
Passat	1.8L L4 F/I	33-2125 ♦	HP-3001
Passat	2.8L V6 F/I	33-2125 ♦	
Polo	1.4L L4 F/I - Type 6N 16v	33-2774 ♦	
1997 VOLKSWAGEN			
Cabrio	2.0L L4 F/I	33-2069	HP-2005
Eurovan	2.8L V6 F/I	33-2759	HP-7005
Golf	1.8L L4 F/I	33-2069	HP-2005
Golf	2.0L L4 F/I	33-2069	HP-2005
Golf GTI	2.8L V6 F/I	33-2069	HP-7005
Golf III	1.8L L4 F/I	33-2069	HP-2005
Golf III	1.9L L4 DSL	33-2069 ♦	HP-3001
Golf III	2.0L L4 F/I	33-2069 ♦	HP-2005
Golf III	2.8L V6 F/I	33-2069 ♦	HP-7005
Golf III GTI	2.0L L4 F/I	33-2069 ♦	HP-2005
Golf IV	1.4L L4 F/I	33-2774 ♦	
Golf IV	1.8L L4 F/I	33-2128 ♦	
Golf IV	1.9L L4 DSL	33-2128 ♦	
Golf IV	2.3L L5 F/I	33-2128 ♦	
Golf IV	2.8L V6 F/I		HP-7005
Golf IV GTI	1.8L L4 F/I	33-2128	
Jetta	1.8L L4 F/I	33-2069	
Jetta	1.9L L4 DSL	33-2069	HP-3001
Jetta	2.0L L4 F/I	33-2069	HP-2005
Jetta	2.8L V6 F/I	33-2069	HP-7005
Jetta III	1.6L L4 F/I - China, Engine Code ACR, ANL	33-2851	
Passat	1.9L L4 DSL	33-2029	HP-3001
Passat	1.9L L4 DSL - 35i model	33-2029 ♦	HP-3001
Passat	1.9L L4 DSL - 3B Model	33-2125 ♦	HP-3001
Passat	2.8L V6 F/I	33-2029	HP-7005
Passat	2.8L V6 F/I - 174BHP	33-2029 ♦	HP-7005
Passat	2.8L V6 F/I - Exc., 174BHP	33-2125 ♦	HP-7005
Passat	2.9L V6 F/I	33-2029	HP-7005
1996 VOLKSWAGEN			
Cabrio	2.0L L4 F/I	33-2069	HP-2005
Golf	1.8L L4 F/I	33-2069	HP-2005
Golf	2.0L L4 F/I	33-2069	HP-2005
Golf GTI	2.8L V6 F/I	33-2069	
Golf III	1.8L L4 F/I	33-2069	HP-2005
Golf III	1.9L L4 DSL	33-2069 ♦	HP-3001
Golf III	2.0L L4 F/I	33-2069 ♦	HP-2005
Golf III	2.8L V6 F/I	33-2069 ♦	HP-7005
Golf III GTI	2.0L L4 F/I	33-2069 ♦	HP-2005
Jetta	1.9L L4 DSL		HP-3001
Jetta	2.0L L4 F/I	33-2069	HP-2005
Jetta	2.8L V6 F/I	33-2069	
Passat	1.9L L4 DSL	33-2029	HP-3001
Passat	1.9L L4 DSL - 35i model	33-2029 ♦	HP-3001

*Indicates 2 filters required ♦ - Intake kit available - see page 80 Applications updated daily at knfilters.com

Vehicle	Engine Type	Air Filter	Oil Filter
1996 VOLKSWAGEN			
Passat	1.9L L4 DSL - 3B Model	33-2125 ♦	HP-3001
Passat	2.0L L4 F/I	33-2029	HP-2005
Passat	2.8L V6 F/I	33-2029	HP-7005
Passat	2.8L V6 F/I - 174BHP	33-2029 ♦	HP-7005
Passat	2.8L V6 F/I - Exc., 174BHP	33-2125 ♦	HP-7005
Polo	1.4L L4 F/I - Type 6N 16v	33-2774 ♦	
Transporter T4	2.4L L5 DSL	33-2759	
1995 VOLKSWAGEN			
Cabrio	2.0L L4 F/I	33-2069	HP-2005
Corrado	2.9L V6 F/I	33-2029 ♦	
Eurovan	2.5L L5 F/I		HP-3001
Golf	1.9L L4 DSL	33-2069	HP-3001
Golf	2.0L L4 F/I	33-2069	HP-2005
Golf	2.8L V6 F/I	33-2069	HP-7005
Golf III	1.8L L4 F/I	33-2069	HP-2005
Golf III	1.9L L4 DSL	33-2069 ♦	HP-3001
Golf III	2.0L L4 F/I	33-2069 ♦	HP-2005
Golf III	2.8L V6 F/I	33-2069 ♦	HP-7005
Golf III GTI	2.0L L4 F/I	33-2069 ♦	HP-2005
Jetta	1.8L L4 F/I		HP-2005
Jetta	1.9L L4 DSL	33-2069	HP-3001
Jetta	2.0L L4 F/I	33-2069	HP-2005
Jetta	2.8L V6 F/I	33-2069	
Jetta III	1.6L L4 F/I - China, Engine Code ACR, ANL	33-2851	
Passat	2.8L V6 F/I	33-2029	
Passat	2.9L V6 F/I	33-2029	HP-7005
1994 VOLKSWAGEN			
Corrado	2.8L V6 F/I	33-2029	
Corrado	2.9L V6 F/I	33-2029 ♦	
Eurovan	2.5L L5 F/I	E-9187	HP-3001
Golf	2.0L L4 F/I	33-2069	HP-2005
Golf III	1.8L L4 F/I	33-2069	HP-2005
Golf III	2.0L L4 F/I	33-2069 ♦	HP-2005
Golf III GTI	2.0L L4 F/I	33-2069 ♦	HP-2005
Jetta	1.9L L4 DSL	33-2069	HP-3001
Jetta	2.0L L4 F/I	33-2069	HP-2005
Jetta	2.8L V6 F/I	33-2069	
Jetta III	1.6L L4 F/I - China, Engine Code ACR, ANL	33-2851	
Transporter T4	2.4L L5 DSL	E-9187	
1993 VOLKSWAGEN			
Cabriolet	1.8L L4 F/I	33-2002	HP-2005
Corrado	2.8L V6 F/I	33-2029	
Corrado	2.9L V6 F/I	33-2029 ♦	
EuroVan	2.5L L5 F/I		HP-3001
Golf	1.8L L4 F/I	33-2069	
Golf I	1.8L L4 CARB	33-2092	
Golf I	1.8L L4 F/I	33-2002	
Golf III	1.8L L4 F/I	33-2069	HP-2005
Golf III	1.9L L4 DSL	33-2069 ♦	HP-3001
Golf III	2.0L L4 F/I	33-2069 ♦	HP-2005
Golf III GTI	2.0L L4 F/I	33-2069	HP-2005
Jetta	2.0L L4 F/I	33-2069	HP-2005
Passat	2.8L V6 F/I	33-2029	HP-7005
1992 VOLKSWAGEN			
Cabriolet	1.8L L4 F/I	33-2002	HP-2005
Corrado	1.8L L4 F/I	33-2032	HP-2005
Corrado	1.8L L4 F/I - 136BHP	33-2032	HP-2005
Corrado	1.8L L4 F/I - 160BHP	33-2029	HP-2005
Corrado	2.8L V6 F/I	33-2029	
Corrado	2.9L V6 F/I	33-2029 ♦	
Eurovan	2.5L L5 F/I		HP-3001
Golf	1.8L L4 F/I	33-2029	HP-2005
Golf	2.0L L4 F/I	33-2029	HP-2005
Golf I	1.8L L4 CARB	33-2092	
Golf I	1.8L L4 F/I	33-2002	
Golf II	1.6L L4 CARB	33-2092	
Golf II	1.6L L4 F/I	33-2092	
Golf III	1.4L L4 F/I - from 7/92	33-2069 ♦	
Golf III	1.4L L4 F/I - To 6/92	E-1210 ♦	
Golf III	1.6L L4 F/I - 75BHP	33-2069 ♦	
Golf III	1.8L L4 F/I	33-2069	HP-2005
Golf III	2.0L L4 F/I	33-2069 ♦	HP-2005
Golf III	2.8L V6 F/I	33-2069 ♦	HP-7005
Golf III GTI	2.0L L4 F/I	33-2069	HP-2005
Jetta	1.6L L4 DSL	33-2001	HP-3001
Jetta	1.8L L4 F/I	33-2029	HP-2005
Jetta	2.0L L4 F/I	33-2029	HP-2005
Jetta III	1.6L L4 F/I - China, Engine Code ACR, ANL	33-2851	
Passat	2.0L L4 F/I	33-2029	HP-2005
Scirocco	1.8L L4 F/I - Exc., 90BHP	33-2002	
Transporter T4	2.5L L5 F/I	E-9187	
1991 VOLKSWAGEN			
Cabriolet	1.8L L4 F/I	33-2002	HP-2005
Corrado	1.8L L4 F/I	33-2032	HP-2005
Corrado	1.8L L4 F/I - 136BHP	33-2032	HP-2005
Corrado	1.8L L4 F/I - 160BHP	33-2029	HP-2005
Golf	1.8L L4 F/I	33-2029	HP-2005
Golf I	1.8L L4 CARB	33-2092	
Golf I	1.8L L4 F/I	33-2002	
Golf II	1.6L L4 CARB	33-2092	
Golf II	1.6L L4 DSL		HP-3001
Golf II	1.6L L4 DSL - 50/54BHP	33-2001	HP-3001
Golf II	1.6L L4 DSL - 60/70/80BHP	33-2029	HP-3001
Golf II	1.6L L4 F/I	33-2092	
Golf II	1.8L L4 CARB	33-2092	
Golf II	1.8L L4 F/I		HP-2005
Golf II	1.8L L4 F/I - 1P/RP Eng. 90/98BHP	33-2001	HP-2005
Golf II	1.8L L4 F/I - GU/RH Eng 84/90BHP	33-2092	HP-2005
Golf II GTI	1.8L L4 F/I		HP-2005
Golf II GTI	1.8L L4 F/I - Exc., 105BHP	33-2029 ♦	HP-2005
Golf III	1.8L L4 F/I	33-2069	HP-2005
Golf III	2.0L L4 F/I	33-2069	HP-2005
Jetta	1.6L L4 DSL	33-2001	HP-3001
Jetta	1.8L L4 F/I	33-2029	HP-2005
Jetta	2.0L L4 F/I	33-2029	HP-2005
Jetta II	1.6L L4 CARB	33-2092	
Jetta II	1.6L L4 DSL - 54/70BHP	33-2001	
Jetta II	1.6L L4 DSL - 60/80BHP	33-2029	
Jetta II	1.6L L4 F/I	33-2092	
Jetta II	1.6L L4 F/I - China, Engine Code ACR, ANL	33-2851	
Jetta II	1.8L L4 F/I - 107/112BHP	33-2029	
Jetta II	1.8L L4 F/I - 129/140BHP	33-2023	
Jetta II	1.8L L4 F/I - 90/98BHP	33-2001	
Passat	2.0L L4 F/I	33-2029	HP-2005
Polo	1.3L L4 CARB	E-1210	

*Indicates 2 filters required ♦ - Intake kit available - see page 80 Applications updated daily at knfilters.com

Vehicle	Engine Type	Air Filter	Oil Filter
1991 VOLKSWAGEN			
Polo	1.3L L4 F/I - w/Panel Filter	33-2003 ♦	
Polo	1.3L L4 F/I - w/Round Filter	E-1210 ♦	
Vanagon	2.1L H4 F/I	E-2475	HP-2005
1990 VOLKSWAGEN			
Cabriolet	1.8L L4 F/I	33-2002	HP-2005
Corrado	1.8L L4 F/I	33-2032	HP-2005
Corrado	1.8L L4 F/I - 136BHP	33-2032	HP-2005
Corrado	1.8L L4 F/I - 160BHP	33-2029	HP-2005
Golf	1.8L L4 F/I	33-2029	HP-2005
Golf I	1.8L L4 CARB	33-2092	
Golf I	1.8L L4 F/I	33-2002	
Golf II	1.6L L4 CARB	33-2092	
Golf II	1.6L L4 DSL		HP-3001
Golf II	1.6L L4 DSL - 50/54BHP	33-2001	HP-3001
Golf II	1.6L L4 DSL - 60/70/80BHP	33-2029	HP-3001
Golf II	1.6L L4 F/I	33-2092	
Golf II	1.8L L4 CARB	33-2092	
Golf II	1.8L L4 F/I		HP-2005
Golf II	1.8L L4 F/I - 1P/RP Eng. 90/98BHP	33-2001	HP-2005
Golf II	1.8L L4 F/I - GU/RH Eng 84/90BHP	33-2092	HP-2005
Golf II GTI	1.8L L4 F/I		HP-2005
Golf II GTI	1.8L L4 F/I - Exc., 105BHP	33-2029 ♦	HP-2005
Jetta	1.6L L4 DSL	33-2001	HP-3001
Jetta	1.8L L4 F/I	33-2001	HP-2005
Jetta	2.0L L4 F/I	33-2029	HP-2005
Jetta I	1.8L L4 CARB	33-2092	HP-2005
Jetta II	1.6L L4 CARB	33-2092	
Jetta II	1.6L L4 DSL - 54/70BHP	33-2001	
Jetta II	1.6L L4 DSL - 60/80BHP	33-2029	
Jetta II	1.6L L4 F/I	33-2092	
Jetta II	1.8L L4 F/I - 107/112BHP	33-2029	
Jetta II	1.8L L4 F/I - 129/140BHP	33-2023	
Jetta II	1.8L L4 F/I - 90/98BHP	33-2001	
Vanagon	2.1L H4 F/I	E-2475	HP-2005
1989 VOLKSWAGEN			
Cabriolet	1.8L L4 F/I	33-2002	HP-2005
Fox	1.8L L4 F/I	33-2002	HP-2005
Golf	1.8L L4 F/I	33-2029	HP-2005
Golf I	1.8L L4 CARB	33-2092	
Golf I	1.8L L4 F/I	33-2002	
Golf II	1.8L L4 CARB	33-2092	
Golf II	1.8L L4 F/I		HP-2005
Golf II	1.8L L4 F/I - 1P/RP Eng. 90/98BHP	33-2001	HP-2005
Golf II	1.8L L4 F/I - GU/RH Eng 84/90BHP	33-2092	HP-2005
Golf II GTI	1.8L L4 F/I - 129/139BHP, to 8/89	33-2001 ♦	
Golf II GTI	1.8L L4 F/I - From 9/89 129/139BHP, Exc., 105BHP	33-2029 ♦	
Jetta	1.6L L4 DSL	33-2001	HP-3001
Jetta	1.8L L4 F/I	33-2001	HP-2005
Jetta I	1.8L L4 CARB	33-2092	
Jetta II	1.6L L4 CARB	33-2092	
Jetta II	1.6L L4 DSL - 54/70BHP	33-2001	
Jetta II	1.6L L4 DSL - 60/80BHP	33-2029	
1989 VOLKSWAGEN			
Jetta II	1.6L L4 F/I	33-2092	
Jetta II	1.8L L4 F/I - 107/112BHP	33-2029	
Jetta II	1.8L L4 F/I - from 9/89, 129/140BHP	33-2023	
Jetta II	1.8L L4 F/I - to 8/89 129/140BHP, 90/98BHP	33-2001	
Vanagon	2.1L H4 F/I	E-2475	HP-2005
1988 VOLKSWAGEN			
Cabriolet	1.8L L4 F/I	33-2002	HP-2005
Golf GTI	1.8L L4 F/I	33-2029	HP-2005
Golf I	1.8L L4 CARB	33-2092	
Golf I	1.8L L4 F/I	33-2002	
Golf II	1.8L L4 CARB	33-2092	
Golf II	1.8L L4 F/I		HP-2005
Golf II	1.8L L4 F/I - 1P/RP Eng. 90/98BHP	33-2001	HP-2005
Golf II	1.8L L4 F/I - GU/RH Eng 84/90BHP	33-2092	HP-2005
Golf II GTI	1.8L L4 F/I		HP-2005
Golf II GTI	1.8L L4 F/I - 107/112/160BHP	33-2029 ♦	HP-2005
Golf II GTI	1.8L L4 F/I - 129/139BHP	33-2001 ♦	HP-2005
Jetta	1.8L L4 F/I	33-2001	HP-2005
Jetta I	1.8L L4 CARB	33-2092	
Jetta II	1.8L L4 F/I - 107/112BHP	33-2029	
Jetta II	1.8L L4 F/I - 90/98/129/140BHP	33-2001	
Scirocco	1.8L L4 F/I	33-2002	HP-2005
Scirocco	1.8L L4 F/I - 90BHP	33-2092	HP-2005
Scirocco	1.8L L4 F/I - Exc., 90BHP	33-2002	HP-2005
Vanagon	2.1L H4 F/I	E-2475	HP-2005
1987 VOLKSWAGEN			
Cabriolet	1.8L L4 F/I	33-2002	HP-2005
Fox	1.8L L4 F/I	33-2002	HP-2005
Golf	1.8L L4 F/I	33-2001	HP-2005
Golf GTI	1.8L L4 F/I	33-2001	HP-2005
Golf I	1.8L L4 CARB	33-2092	
Golf I	1.8L L4 F/I	33-2002	
Golf II	1.8L L4 CARB	33-2092	
Golf II	1.8L L4 F/I		HP-2005
Golf II	1.8L L4 F/I - 1P/RP Eng. 90/98BHP	33-2001	HP-2005
Golf II	1.8L L4 F/I - GU/RH Eng 84/90BHP	33-2092	HP-2005
Golf II GTI	1.8L L4 F/I		HP-2005
Golf II GTI	1.8L L4 F/I - 107/112BHP	33-2029 ♦	HP-2005
Golf II GTI	1.8L L4 F/I - 129/139BHP	33-2001 ♦	HP-2005
Jetta	1.8L L4 F/I	33-2001	HP-2005
Jetta I	1.8L L4 CARB	33-2092	
Jetta II	1.8L L4 F/I - 107/112BHP	33-2029	
Jetta II	1.8L L4 F/I - 90/98/129/140BHP	33-2001	
Scirocco	1.8L L4 F/I	33-2002	HP-2005
Scirocco	1.8L L4 F/I - 90BHP	33-2092	HP-2005
Scirocco	1.8L L4 F/I - Exc., 90BHP	33-2002	HP-2005
Vanagon	2.1L H4 F/I	E-2475	HP-2005
1986 VOLKSWAGEN			
Cabriolet	1.8L L4 F/I	33-2002	HP-2005
Golf	1.6L L4 DSL	33-2001	HP-3001
Golf	1.8L L4 F/I	33-2001	HP-2005
Golf I	1.6L L4 CARB - 72BHP, 75BHP	33-2092	

*Indicates 2 filters required ♦ - Intake kit available - see page 80 Applications updated daily at knfilters.com

Vehicle	Engine Type	Air Filter	Oil Filter
1986 VOLKSWAGEN			
Golf I	1.6L L4 F/I - 72BHP, 75BHP	33-2092	
Golf I	1.8L L4 CARB	33-2092	
Golf I	1.8L L4 F/I	33-2002	
Golf II	1.6L L4 CARB	33-2092	
Golf II	1.6L L4 DSL		HP-3001
Golf II	1.6L L4 DSL - 50/54BHP	33-2001	HP-3001
Golf II	1.6L L4 F/I	33-2092	
Golf II	1.8L L4 CARB	33-2092	
Golf II	1.8L L4 F/I		HP-2005
Golf II	1.8L L4 F/I - 1P/RP Eng. 90/98BHP	33-2001	HP-2005
Golf II	1.8L L4 F/I - GU/RH Eng 84/90BHP	33-2092	HP-2005
Golf II GTI	1.8L L4 F/I	33-2001	HP-2005
Jetta	1.6L L4 DSL - exc. Turbo		HP-3001
Jetta	1.6L L4 DSL - Turbo	33-2029	HP-3001
Jetta	1.8L L4 F/I	33-2001	HP-2005
Jetta I	1.8L L4 CARB	33-2092	
Jetta II	1.6L L4 CARB	33-2092	
Jetta II	1.6L L4 DSL	33-2001	
Jetta II	1.6L L4 F/I	33-2092	
Jetta II	1.8L L4 F/I - Exc., 95BHP	33-2001	
Scirocco	1.8L L4 F/I	33-2002	HP-2005
Scirocco	1.8L L4 F/I - 90BHP	33-2092	HP-2005
Scirocco	1.8L L4 F/I - Exc., 90BHP	33-2002	HP-2005
Vanagon	2.1L H4 F/I	E-2475	HP-2005
1985 VOLKSWAGEN			
Cabriolet	1.8L L4 F/I	33-2002	HP-2005
Golf I	1.8L L4 F/I	33-2002	
Golf II	1.8L L4 CARB	33-2092	HP-2005
Golf II	1.8L L4 F/I	33-2092	HP-2005
Golf II GTI	1.8L L4 F/I	33-2001	HP-2005
Jetta II	1.6L L4 CARB	33-2092	
Jetta II	1.6L L4 DSL	33-2001	
Jetta II	1.6L L4 F/I	33-2092	
Jetta II	1.8L L4 F/I - Exc., 95BHP	33-2001	
Scirocco	1.8L L4 F/I	33-2002	HP-2005
Scirocco	1.8L L4 F/I - Exc., 90BHP	33-2002	HP-2005
Vanagon	1.9L H4 F/I	33-2003	HP-2005
1984 VOLKSWAGEN			
Golf I	1.8L L4 F/I	33-2002	
Golf II GTI	1.8L L4 F/I - 112BHP	33-2001	
Jetta	1.8L L4 F/I	33-2001	HP-2005
Jetta I	1.8L L4 F/I	33-2001	
Jetta II	1.8L L4 F/I - Exc., 95BHP	33-2001	
Rabbit	1.6L L4 DSL	33-2001	HP-3001
Rabbit	1.7L L4 CARB		HP-2005
Rabbit	1.7L L4 F/I	33-2002	HP-2005
Rabbit	1.8L L4 F/I	33-2002	HP-2005
Scirocco	1.8L L4 F/I	33-2002	HP-2005
Scirocco	1.8L L4 F/I - 90BHP	33-2092	HP-2005
Scirocco	1.8L L4 F/I - Exc., 90BHP	33-2002	HP-2005
Vanagon	1.9L H4 F/I	33-2003	HP-2005
1983 VOLKSWAGEN			
Golf I GTI	1.8L L4 F/I	33-2002	
Rabbit	1.6L L4 DSL	33-2001	HP-3001
Rabbit	1.8L L4 F/I	33-2002	HP-2005
Rabbit Convertible	1.7L L4 F/I	33-2002	HP-2005
1983 VOLKSWAGEN			
Rabbit Pickup	1.6L L4 DSL	33-2001	HP-3001
Rabbit Pickup	1.7L L4 F/I	33-2002	HP-2005
1982 VOLKSWAGEN			
Golf I GTI	1.8L L4 CARB	33-2002	
Rabbit	1.6L L4 DSL	33-2001	HP-3001
Rabbit	1.7L L4 CARB	33-2001	HP-2005
Rabbit	1.7L L4 F/I	33-2002	HP-2005
Rabbit Pickup	1.6L L4 DSL	33-2001	HP-3001
Rabbit Pickup	1.7L L4 F/I	33-2002	HP-2005
Vanagon	2.0L H4 F/I	33-2003	HP-2004
1981 VOLKSWAGEN			
Rabbit	1.6L L4 DSL	33-2001	HP-3001
Rabbit	1.7L L4 F/I	33-2002	HP-2005
Rabbit Convertible	1.7L L4 F/I	33-2002	HP-2005
Rabbit Pickup	1.6L L4 DSL	33-2001	HP-3001
Rabbit Pickup	1.7L L4 F/I	33-2002	HP-2005
Scirocco	1.7L L4 F/I	33-2002	HP-2005
Vanagon	2.0L H4 F/I	33-2003	HP-2004
1980 VOLKSWAGEN			
Rabbit	1.5L L4 CARB	33-2001	HP-2005
Rabbit	1.5L L4 DSL	33-2001	HP-3001
Rabbit	1.5L L4 F/I	33-2001	
Rabbit	1.6L L4 F/I	33-2002	HP-2005
Rabbit Pickup	1.5L L4 CARB	33-2001	
Rabbit Pickup	1.5L L4 F/I	33-2002	
Rabbit Pickup	1.6L L4 F/I	33-2002	HP-2005
Vanagon	2.0L H4 F/I	33-2003	HP-2004
1979 VOLKSWAGEN			
Beetle	1.6L H4 F/I	33-2001	
Rabbit	1.5L L4 CARB	33-2001	
Rabbit	1.5L L4 DSL	33-2001	HP-3001
Rabbit	1.5L L4 F/I	33-2002	HP-2005
Transporter T2	2.0L L4 CARB	33-2003	
1978 VOLKSWAGEN			
Beetle	1.6L H4 F/I	33-2001	
Rabbit	1.5L L4 CARB	33-2001	HP-2005
Rabbit	1.5L L4 DSL	33-2001	HP-3001
Rabbit	1.5L L4 F/I	33-2002	HP-2005
Transporter	2.0L H4 F/I	33-2003	HP-2004
Transporter T2	1.6L H4 CARB	33-2003	
Transporter T2	2.0L H4 CARB	33-2003	
1977 VOLKSWAGEN			
Beetle	1.6L H4 F/I	33-2001	
Transporter	2.0L H4 F/I	33-2003	HP-2004
Transporter T2	2.0L H4 CARB	33-2003	
1976 VOLKSWAGEN			
Beetle	1.6L H4 F/I	33-2001	
Transporter T2	2.0L H4 CARB	33-2003	
1975 VOLKSWAGEN			
Beetle	1.6L H4 F/I	33-2001	
1974 VOLKSWAGEN			
Beetle	97 H4 CARB	33-2001	
Transporter T2	1.8L H4 F/I	33-2003	
1973 VOLKSWAGEN			
Transporter	1.7L H4 F/I	33-2003	HP-2004
Transporter T2	1.6L H4 CARB	33-2003	
Transporter T2	1.7L H4 F/I	33-2003	
Transporter T2	1.8L H4 F/I	33-2003	

*Indicates 2 filters required ♦ - Intake kit available - see page 80 Applications updated daily at knfilters.com

Vehicle	Engine Type	Air Filter	Oil Filter
1972 VOLKSWAGEN			
Transporter	1.7L H4 F/I	33-2003	HP-2004
Transporter T2	1.6L H4 CARB	33-2003	
Transporter T2	1.7L H4 F/I	33-2003	
1971 VOLKSWAGEN			
Transporter T2	1.6L H4 CARB	33-2003	
1970 VOLKSWAGEN			
Transporter T2	1.6L H4 CARB	33-2003	
1969 VOLKSWAGEN			
Transporter T2	1.6L H4 CARB	33-2003	
1968 VOLKSWAGEN			
Transporter T2	1.6L H4 CARB	33-2003	
2013 VOLVO			
S60 II	3.0L L6 F/I	33-2418	
XC70 II	3.0L L6 F/I	33-2418	
2012 VOLVO			
C30	2.0L L4 F/I	E-2993 ♦	
C30	2.0L L5 DSL	33-2976	
C70 II	2.5L L5 F/I	33-2873	
S60 II	1.6L L4 DSL	33-2388	
S60 II	1.6L L4 F/I	33-2388	
S60 II	2.0L L4 F/I	33-2388	
S60 II	2.0L L5 DSL	33-2388	
S60 II	2.4L L5 DSL	33-2388	
S60 II	3.0L L6 F/I	33-2418	
S80 II	3.2L L6 F/I	33-2418	
XC60	2.4L L5 DSL	33-2388	
XC70 II	3.0L L6 F/I	33-2418	
XC90	2.4L L5 DSL	33-2972	
2011 VOLVO			
C30	2.0L L4 F/I	E-2993 ♦	
C30	2.0L L5 DSL	33-2976	
C30	2.4L L5 DSL	33-2976	
C30	2.5L L5 F/I	33-2873 ♦	
C70	2.5L L5 F/I	33-2873	
C70 II	2.5L L5 F/I	33-2873	
S40	2.5L L5 F/I	33-2873	
S40 II	2.5L L5 F/I	33-2873 ♦	
S60	2.0L L4 DSL	33-2388	
S60	2.0L L4 F/I	33-2388	
S60 II	2.0L L4 F/I	33-2388	
S60 II	2.0L L5 DSL	33-2388	
S60 II	2.4L L5 DSL	33-2388	
S60 II	3.0L L6 F/I	33-2418	
S80 II	3.0L L6 F/I	33-2418	
S80 II	3.2L L6 F/I	33-2418	
V50	2.5L L5 F/I	33-2873 ♦	
XC60	2.4L L5 DSL	33-2388	
XC70 II	3.0L L6 F/I	33-2418	
XC90	2.4L L5 DSL	33-2972	
2010 VOLVO			
C30	2.4L L5 DSL	33-2976	
C30	2.5L L5 F/I	33-2873 ♦	
C70	2.5L L5 F/I	33-2873	
C70 II	2.0L L4 DSL - exc. D3 & D4 Eng.	33-2393	
C70 II	2.5L L5 F/I	33-2873	
S40	2.4L L5 F/I	33-2873	
S40	2.5L L5 F/I	33-2873	
S40 II	2.4L L5 DSL	33-2976	
S40 II	2.5L L5 F/I	33-2873 ♦	
2010 VOLVO			
S60	3.0L L6 F/I	33-2418	
S60 II	2.4L L5 DSL	33-2388	
S60 II	3.0L L6 F/I	33-2418	
S80 II	2.0L L4 F/I - exc. Turbo	33-2393	
S80 II	2.0L L5 DSL - to 3/10	33-2393	
S80 II	3.2L L6 F/I	33-2418	
V50	2.4L L5 DSL	33-2976	
V50	2.4L L5 F/I	33-2873	
V50	2.5L L5 F/I	33-2873 ♦	
V70 III	2.0L L4 DSL - exc. D3 & D4 Eng.	33-2393	
V70 III	2.0L L4 F/I - exc. Turbo	33-2393	
V70 III	3.2L L6 F/I	33-2418	
XC70 II	3.0L L6 F/I	33-2418	
2009 VOLVO			
C30	2.0L L4 DSL	E-2993 ♦	
C30	2.0L L4 F/I	E-2993 ♦	
C30	2.4L L5 DSL	33-2976	
C30	2.5L L5 F/I	33-2873 ♦	
C70	2.5L L5 F/I	33-2873	
C70 II	2.5L L5 F/I	33-2873	
S40	2.5L L5 F/I	33-2873	
S40 II	1.6L L4 DSL	E-2993 ♦	
S40 II	1.6L L4 F/I	E-2993 ♦	
S40 II	2.0L L4 DSL	E-2993 ♦	
S40 II	2.0L L4 F/I	E-2993 ♦	
S40 II	2.4L L5 DSL	33-2976	
S40 II	2.5L L5 F/I	33-2873 ♦	
S60	2.4L L5 DSL - 185BHP	33-2972	
S60	2.4L L5 DSL - Exc., 185BHP	33-2176	
S80 II	2.0L L4 F/I	33-2393	
S80 II	2.5L L5 F/I	33-2873	
S80 II	3.0L L6 F/I	33-2418	
V50	2.4L L5 DSL	33-2976	
V50	2.4L L5 F/I	33-2873	
V50	2.5L L5 F/I	33-2873 ♦	
V70 III	2.4L L5 DSL	33-2388	
XC70 II	3.0L L6 F/I	33-2418	
2008 VOLVO			
C30	1.6L L4 DSL	E-2993 ♦	
C30	1.6L L4 F/I	E-2993 ♦	
C30	1.8L L4 F/I	E-2993 ♦	
C30	2.0L L4 DSL	E-2993 ♦	
C30	2.0L L4 F/I	E-2993 ♦	
C30	2.4L L5 DSL	33-2976	
C30	2.5L L5 F/I	33-2873 ♦	
C70	2.5L L5 F/I	33-2873	
C70 II	2.4L L5 DSL	33-2976	
C70 II	2.4L L5 F/I	33-2873	
C70 II	2.5L L5 F/I	33-2873	
S40	2.4L L5 F/I	33-2873	
S40	2.5L L5 F/I	33-2873	
S40 II	2.4L L5 DSL	33-2976	
S40 II	2.4L L5 F/I	33-2873	
S40 II	2.5L L5 F/I	33-2873 ♦	
S60	2.4L L5 DSL - 185BHP	33-2972	
S60	2.4L L5 DSL - Exc., 185BHP	33-2176	
S80 II	2.5L L5 F/I	33-2873	
V50	2.4L L5 DSL	33-2976	
V50	2.4L L5 F/I	33-2873	
V50	2.5L L5 F/I	33-2873 ♦	
V70 III	2.0L L4 DSL	33-2393	

*Indicates 2 filters required ♦ - Intake kit available - see page 80 Applications updated daily at knfilters.com

Vehicle	Engine Type	Air Filter	Oil Filter
2008 VOLVO			
V70 III	2.0L L4 F/I	33-2393	
XC70	2.4L L5 DSL	33-2388	
XC70 II	2.4L L5 DSL	33-2388	
2007 VOLVO			
C30	2.4L L5 DSL	33-2976	
C30	2.4L L5 F/I	33-2873	
C30	2.5L L5 F/I	33-2873 ♦	
C70	2.5L L5 F/I	33-2873	
C70 II	2.5L L5 F/I	33-2873	
S40	2.4L L5 F/I	33-2873	
S40	2.5L L5 F/I	33-2873	
S40 II	2.0L L4 DSL - from 8/07	E-2993 ♦	
S40 II	2.0L L4 DSL - to 7/07	33-2886 ♦	
S40 II	2.0L L4 F/I - from 8/07	E-2993 ♦	
S40 II	2.0L L4 F/I - to 7/07	33-2877 ♦	
S40 II	2.4L L5 DSL	33-2976	
S40 II	2.4L L5 F/I	33-2873	
S40 II	2.5L L5 F/I	33-2873 ♦	
S60	2.0L L5 F/I	33-2176	
S60	2.4L L5 DSL - 185BHP	33-2972	
S60	2.4L L5 DSL - Exc., 185BHP	33-2176	
V50	2.4L L5 DSL	33-2976	
V50	2.4L L5 F/I	33-2873	
V50	2.5L L5 F/I	33-2873 ♦	
V70 III	2.0L L4 DSL	33-2393	
V70 III	2.0L L4 F/I	33-2393	
V70 III	2.5L L5 F/I	33-2873	
XC70 Cross Country	2.4L L5 DSL - Exc., 185BHP	33-2388	
XC70 II	2.4L L5 DSL - Exc., 185BHP	33-2388	
XC90	2.5L L5 F/I	33-2280	
2006 VOLVO			
C30	2.5L L5 F/I	33-2873 ♦	
C70	2.5L L5 F/I	33-2873	
C70 II	2.4L L5 F/I	33-2873	
C70 II	2.5L L5 F/I	33-2873	
S40	2.4L L5 F/I	33-2873	
S40	2.5L L5 F/I	33-2873 ♦	
S40 II	2.0L L4 F/I	33-2877 ♦	
S40 II	2.4L L5 DSL	33-2976	
S40 II	2.4L L5 F/I	33-2873	
S40 II	2.5L L5 F/I	33-2873 ♦	
S60	2.0L L5 F/I	33-2176	
S60	2.4L L5 DSL - 185BHP	33-2972	
S60	2.4L L5 DSL - Exc., 185BHP	33-2176	
S80 II	4.4L V8 F/I	33-2388	
V50	2.4L L5 DSL	33-2976	
V50	2.4L L5 F/I	33-2873	
V50	2.5L L5 F/I	33-2873 ♦	
V70 II	2.4L L5 DSL - 185BHP	33-2388	
V70 II	2.4L L5 DSL - Exc., 185BHP	33-2176	
XC70 Cross Country	2.4L L5 DSL - Exc., 185BHP	33-2388	
XC90	2.4L L5 DSL - 163BHP	33-2280 ♦	
XC90	3.2L L6 F/I	33-2400	
2005 VOLVO			
S40	2.5L L5 F/I	33-2873 ♦	
S40 II	1.6L L4 DSL - from 10/05	33-2874	
S40 II	1.6L L4 DSL - to 9/05	33-2886	
S40 II	1.6L L4 F/I	33-2877 ♦	
2005 VOLVO			
S40 II	1.8L L4 F/I	33-2877 ♦	
S40 II	2.0L L4 DSL	33-2886	
S40 II	2.4L L5 F/I	33-2873	
S40 II	2.5L L5 F/I	33-2873 ♦	
S60	2.4L L5 DSL - 185BHP	33-2972	
S60	2.4L L5 DSL - Exc., 185BHP	33-2176	
S80	2.8L L6 F/I	33-2152	
V50	2.4L L5 F/I	33-2873	
V50	2.5L L5 F/I	33-2873 ♦	
V70 II	2.4L L5 DSL - 185BHP	33-2388	
V70 II	2.4L L5 DSL - Exc., 185BHP	33-2176	
XC70 Cross Country	2.4L L5 DSL - from 9/05, Exc., 185BHP	33-2388	
XC70 Cross Country	2.4L L5 DSL - to 8/05	33-2176	
XC90	2.4L L5 DSL - 163BHP	33-2280 ♦	
2004 VOLVO			
S40 II	1.8L L4 F/I	33-2877 ♦	
S40 II	2.0L L4 DSL	33-2886	
S40 II	2.4L L5 F/I	33-2873	
S60	2.4L L5 DSL	33-2176	
S80	2.8L L6 F/I	33-2152	
S80	3.0L L6 F/I	33-2269	
V40	1.9L L4 DSL	33-2763	
V70 II	2.4L L5 DSL	33-2176	
XC70 Cross Country	2.4L L5 DSL	33-2176	
XC90	2.4L L5 DSL	33-2280 ♦	
2003 VOLVO			
S40 I	1.9L L4 DSL	33-2763	
S60	2.4L L5 DSL	33-2176	
S80	2.5L L5 F/I	33-2152	
S80	3.0L L6 F/I	33-2269	
V40	1.9L L4 DSL	33-2763	
V70 II	2.4L L5 DSL	33-2176	
V70 II	2.5L L5 F/I - 300BHP	E-2019	
V70 II	2.5L L5 F/I - Exc., 300BHP	33-2176	
XC70 Cross Country	2.4L L5 DSL	33-2176	
XC90	2.4L L5 DSL	33-2280 ♦	
2002 VOLVO			
S40 I	1.9L L4 DSL	33-2763	
S60	2.0L L5 F/I	33-2176	
S60	2.4L L5 DSL	33-2176	
S80	3.0L L6 F/I	33-2269	
V40	1.9L L4 DSL	33-2763	
V70 II	2.4L L5 DSL	33-2176	
XC70 Cross Country	2.4L L5 DSL	33-2176	
2001 VOLVO			
S40 I	1.9L L4 DSL	33-2763	
S60	2.0L L5 F/I	33-2176	
S60	2.4L L5 DSL	33-2176	
S80	2.0L L5 F/I	33-2152	
S80	2.4L L5 DSL	33-2152	
S80	2.5L L5 DSL	33-2152	
S80	3.0L L6 F/I	33-2269	
V40	1.9L L4 DSL	33-2763	
V70	2.4L L5 DSL	33-2176	
V70 II	2.0L L5 F/I	33-2670	
V70 II	2.4L L5 DSL	33-2176	
V70 II	2.5L L5 DSL	33-2176	
2000 VOLVO			
C70 I	2.0L L5 F/I	33-2670	

*Indicates 2 filters required ♦ - Intake kit available - see page 80 Applications updated daily at knfilters.com

Vehicle	Engine Type	Air Filter	Oil Filter
2000 VOLVO			
C70 I	2.4L L5 F/I	33-2670 ♦	
C70 I	2.4L L5 F/I - exc. Turbo	33-2670	HP-1009
S40 I	1.9L L4 DSL	33-2763	
S70	2.0L L5 F/I	33-2670	
S70	2.5L L5 DSL	33-2670	
S70	2.5L L5 F/I	33-2670	
S80	2.0L L5 F/I	33-2152	
S80	2.5L L5 DSL	33-2152	
V40	1.9L L4 DSL	33-2763	
V70 I	2.5L L5 DSL	33-2670	
V70 I	2.5L L5 F/I	33-2670	
V70 II	2.5L L5 DSL	33-2176	
1999 VOLVO			
C70 I	2.4L L5 F/I	33-2670 ♦	
C70 I	2.4L L5 F/I - exc. Turbo	33-2670	HP-1009
S70	2.0L L5 F/I	33-2670	
S70	2.4L L5 F/I	33-2670	HP-1009
S70	2.5L L5 DSL	33-2670	
S70	2.5L L5 F/I	33-2670	
V70	2.4L L5 F/I	33-2670	HP-1009
V70 I	2.0L L5 F/I	33-2670	
V70 I	2.3L L5 F/I	33-2670 ♦	HP-1009
V70 I	2.5L L5 DSL	33-2670	
V70 I	2.5L L5 F/I	33-2670	
1998 VOLVO			
C70 I	2.4L L5 F/I	33-2670	
C70 I	2.4L L5 F/I - exc. Turbo	33-2670	HP-1009
S70	2.0L L5 F/I	33-2670	
S70	2.3L L5 F/I	33-2670 ♦	HP-1009
S70	2.4L L5 F/I	33-2670	HP-1009
S70	2.5L L5 DSL	33-2670	
S70	2.5L L5 F/I	33-2670	
S90	2.9L L6 F/I	33-2755	HP-1009
V70	2.3L L5 F/I	33-2670	HP-1009
V70	2.4L L5 F/I	33-2670	HP-1009
V70 I	2.0L L5 F/I	33-2670	
V70 I	2.3L L5 F/I	33-2670 ♦	HP-1009
V70 I	2.5L L5 DSL	33-2670	
V70 I	2.5L L5 F/I	33-2670	
V90	2.9L L6 F/I	33-2755	HP-1009
1997 VOLVO			
850	2.3L L5 F/I	33-2670	HP-1009
850	2.4L L5 F/I	33-2670	HP-1009
960	2.6L L6 F/I		HP-1009
960	2.9L L6 F/I		HP-1009
S90	2.9L L6 F/I	33-2755	
1996 VOLVO			
850	2.0L L5 F/I	33-2670	
850	2.3L L5 F/I	33-2670 ♦	HP-1009
850	2.4L L5 F/I	33-2670	HP-1009
850	2.5L L5 DSL	33-2670	
1995 VOLVO			
850	2.0L L5 F/I	33-2670	
850	2.3L L5 F/I	33-2670 ♦	HP-1009
850	2.4L L5 F/I	33-2670	HP-1009
850	2.5L L5 DSL	33-2670	
940	2.3L L4 F/I	33-2526	HP-1009
960	2.9L L6 F/I	33-2526	
1994 VOLVO			
850	2.0L L5 F/I	33-2670	
850	2.3L L5 F/I	33-2670 ♦	HP-1009
1994 VOLVO			
850	2.4L L5 F/I	33-2670	HP-1009
940	2.3L L4 F/I	33-2526	HP-1009
940 Turbo	2.3L L4 F/I	33-2043	HP-1009
960	2.9L L6 F/I	33-2526	
1993 VOLVO			
240	2.3L L4 F/I	33-2538	HP-1009
850	2.0L L5 F/I	33-2670	
850	2.3L L5 F/I	33-2670 ♦	
850	2.4L L5 F/I	33-2670	HP-1009
940	2.3L L4 F/I	33-2526	HP-1009
940 Turbo	2.3L L4 F/I	33-2043	HP-1009
1992 VOLVO			
240	2.3L L4 F/I	33-2538	HP-1009
740	2.3L L4 F/I		HP-1009
740	2.3L L4 F/I - exc. Turbo	33-2526	HP-1009
740	2.3L L4 F/I - Turbo	33-2043	HP-1009
940	2.3L L4 F/I	33-2526	HP-1009
940 Turbo	2.3L L4 F/I	33-2043	HP-1009
1991 VOLVO			
240	2.3L L4 F/I	33-2538	HP-1009
740	2.3L L4 F/I		HP-1009
740	2.3L L4 F/I - exc. Turbo	33-2526	HP-1009
740	2.3L L4 F/I - Turbo	33-2043	HP-1009
940	2.3L L4 F/I	33-2526	HP-1009
940 Turbo	2.3L L4 F/I	33-2043	HP-1009
1990 VOLVO			
240	2.3L L4 F/I	33-2538	HP-1009
740	2.3L L4 F/I		HP-1009
740	2.3L L4 F/I - exc. Turbo	33-2526	HP-1009
740	2.3L L4 F/I - Turbo	33-2043	HP-1009
760	2.8L V6 F/I	33-2043	HP-1009
1989 VOLVO			
242	2.3L L4 F/I		HP-1009
242	2.3L L4 F/I - 133BHP	33-2538	HP-1009
244	2.3L L4 F/I		HP-1009
244	2.3L L4 F/I - 133BHP	33-2538	HP-1009
740	2.3L L4 F/I		HP-1009
740	2.3L L4 F/I - exc. Turbo	33-2526	HP-1009
740	2.3L L4 F/I - Turbo	33-2043	HP-1009
1988 VOLVO			
244	2.3L L4 F/I		HP-1009
244	2.3L L4 F/I - 133BHP	33-2538	HP-1009
245	2.3L L4 F/I		HP-1009
245	2.3L L4 F/I - 133BHP	33-2538	HP-1009
740	2.3L L4 F/I		HP-1009
740	2.3L L4 F/I - exc. Turbo	33-2526	HP-1009
740	2.3L L4 F/I - Turbo	33-2043	HP-1009
744	2.3L L4 CARB	33-2526	
744	2.3L L4 F/I - exc. Turbo	33-2526	
760	2.3L L4 F/I	33-2043	HP-1009
1987 VOLVO			
242	2.3L L4 F/I - 133BHP	33-2538	
242	2.4L L6 DSL	33-2003	
244	2.3L L4 F/I - 133BHP	33-2538	
245	2.3L L4 F/I		HP-1009
245	2.3L L4 F/I - 133BHP	33-2538	HP-1009
740	2.3L L4 F/I		HP-1009
740	2.3L L4 F/I - exc. Turbo	33-2526	HP-1009
740	2.3L L4 F/I - Turbo	33-2043	HP-1009

*Indicates 2 filters required ♦ - Intake kit available - see page 80 Applications updated daily at knfilters.com

Vehicle	Engine Type	Air Filter	Oil Filter
1986 VOLVO			
242	2.3L L4 F/I		HP-1009
242	2.3L L4 F/I - 133BHP	33-2538	HP-1009
244	2.3L L4 F/I		HP-1009
244	2.3L L4 F/I - 133BHP	33-2538	HP-1009
245	2.3L L4 F/I		HP-1009
245	2.3L L4 F/I - 133BHP	33-2538	HP-1009
740	2.3L L4 F/I		HP-1009
740	2.3L L4 F/I - exc. Turbo	33-2526	HP-1009
740	2.3L L4 F/I - Turbo	33-2043	HP-1009
1985 VOLVO			
244	2.3L L4 F/I	33-2538	HP-1009
740	2.3L L4 F/I - exc. Turbo	33-2526	
740	2.3L L4 F/I - Turbo	33-2043	
1984 VOLVO			
244	2.1L L4 F/I - 155BHP	33-2538	
244	2.1L L4 F/I - Exc., 155BHP	E-9032	
245	2.3L L4 F/I	33-2538	
1983 VOLVO			
242	2.1L L4 F/I - 155BHP	33-2538	
242	2.1L L4 F/I - Exc., 115BHP	E-9032	
242	2.1L L4 F/I - Exc., 155BHP	E-9032	
1982 VOLVO			
242	2.1L L4 F/I - 155BHP	33-2538	
242	2.1L L4 F/I - Exc., 155BHP	E-9032	
245	2.1L L4 F/I - 155BHP	33-2538	
245	2.1L L4 F/I - Exc., 155BHP	E-9032	
1981 VOLVO			
242	2.1L L4 F/I - exc. Turbo	E-9032	
1980 VOLVO			
242	2.1L L4 F/I - 155BHP	33-2538	
242	2.1L L4 F/I - Exc., 155BHP	E-9032	
1978 VOLVO			
244	2.1L L4 F/I	33-2538	
1975 VOLVO			
244	2.0L L4 F/I - 82BHP	33-2538	
1974 VOLVO			
145	2.0L L4 F/I - 116BHP	E-2560	
164	3.0L L6 F/I	E-2840	HP-1009
1973 VOLVO			
1800	2.0L L4 F/I	E-2530	HP-1009
1972 VOLVO			
1800	2.0L L4 F/I	E-2530	HP-1009
1971 VOLVO			
142	2.0L L4 F/I - 124BHP	E-2360	
1800	2.0L L4 F/I	E-2530	HP-1009
1970 VOLVO			
1800	2.0L L4 F/I	E-2530	HP-1009
1968 VOLVO			
122	112 L4 CARB		HP-1009
1967 VOLVO			
122	112 L4 CARB		HP-1009
1800	109 L4 CARB		HP-1009

Vehicle	Engine Type	Air Filter	Oil Filter
1966 VOLVO			
122	109 L4 CARB		HP-1009
1965 VOLVO			
122	109 L4 CARB		HP-1009
1800	109 L4 CARB		HP-1009
1963 VOLVO			
122	109 L4 CARB		HP-1009
1962 VOLVO			
544	109 L4 CARB		HP-1009
2013 YAMAHA			
FJR1300A	1300	YA-1301	KN-148
FZ6R	600	YA-6009	KN-204
		YA-6009	KN-204C
WR250F	250	YA-4503	KN-140
WR250R	250	YA-3586	KN-140
XT1200Z Super Tenere	1199	YA-1210	KN-204
		YA-1210	KN-204C
XV1900 Raider S	1854	YA-1906	KN-303
		YA-1906	KN-303C
XVS650 V-Star	650	YA-6598	KN-145
YFM350R Raptor	350	YA-6602	KN-142
YFM550F Grizzly FI Auto 4x4	558	YA-7007	KN-204
		YA-7007	KN-204C
YFM700F Grizzly FI Auto 4x4	686	YA-7007	KN-204
		YA-7007	KN-204C
YFM700R Raptor	700		KN-145
YFZ450R	450	YA-4504	KN-140
YXR700 Rhino FI	700	YA-7008 ♦	KN-204
		YA-7008 ♦	KN-204C
YZ125	125	YA-2506XD	
YZ250F	250	YA-2506XD	KN-140
YZ450F	450	YA-4510	KN-140
YZF R1	998	YA-1009	KN-204
		YA-1009	KN-204C
YZF R1	998 - Race Specific	YA-1009R	KN-204
YZF R6	599	YA-6008	KN-204
		YA-6008	KN-204C
2012 YAMAHA			
FJR1300A	1300	YA-1301	KN-148
FZ1	1000	YA-1006	KN-204
		YA-1006	KN-204C
FZ1 Fazer	998	YA-1006	KN-204
		YA-1006	KN-204C
FZ6R	600	YA-6009	KN-204
		YA-6009	KN-204C
FZ8	800	YA-1006	KN-204
		YA-1006	KN-204C
TTR125LE	124	YA-1201	
TTR230	230		KN-143
TW200	200		KN-143
VMX1700 V-Max	1700	YA-1709	KN-303
		YA-1709	KN-303C
VP125 X-City	125		KN-141
WR125R	125		KN-141
WR125X	125		KN-141
WR250F	250	YA-4503	KN-140
WR250R	250	YA-3586	KN-140
WR250X	250		KN-140

*Indicates 2 filters required ♦ - Intake kit available - see page 80 Applications updated daily at knfilters.com

Vehicle	Engine Type	Air Filter	Oil Filter
2012 YAMAHA			
WR450F	450	YA-4503	KN-140
XJ6	600	YA-6009	KN-204
		YA-6009	KN-204C
XJ6 Diversion	600	YA-6009	KN-204
		YA-6009	KN-204C
XJR1300	1251	YA-1308	KN-401
XP500 T-Max	500	YA-5008	
XP500 T-Max	500 - 1st Filter	YA-5008	KN-147
XT250	250		KN-140
XT660Z Tenere	660	YA-6608	KN-145
XT1200Z Super Tenere	1199	YA-1210	KN-204
		YA-1210	KN-204C
XV250 V-Star	250		KN-145
XV1700 Road Star S	1700	YA-1704	KN-303
		YA-1704	KN-303C
XV1700 Road Star Silverado S	1700	YA-1704	
XV1900 Raider	1854	YA-1906	KN-303
		YA-1906	KN-303C
XV1900 Raider S	1854	YA-1906	KN-303
		YA-1906	KN-303C
XV1900 Roadliner	1854	YA-1906	KN-303
		YA-1906	KN-303C
XV1900 Stratoliner	1854	YA-1906	KN-303
		YA-1906	KN-303C
XV1900 Stratoliner Deluxe	1854	YA-1906	KN-303
		YA-1906	KN-303C
XVS13CA Stryker	1300	YA-1307	KN-204
		YA-1307	KN-204C
XVS950 V-Star	950	YA-1307	KN-204
		YA-1307	KN-204C
XVS950 V-Star Tourer	950	YA-1307	KN-204
		YA-1307	KN-204C
XVS1300 V-Star	1300	YA-1307	KN-204
		YA-1307	KN-204C
XVS1300 V-Star Tourer	1300	YA-1307	KN-204
		YA-1307	KN-204C
XVZ1300 Royal Star Venture S	1300	YA-1399	KN-303
		YA-1399	KN-303C
YFM125 Grizzly Auto	125	YA-2088	
YFM125 Raptor	125	YA-2088	
YFM250R Raptor	250	YA-2088	KN-140
YFM350R Raptor	350	YA-6602	KN-142
YFM400 Big Bear IRS 4x4	400		KN-142
YFM450 Grizzly Auto	450	YA-3504	KN-204
		YA-3504	KN-204C
YFM450 Grizzly Auto EPS	450	YA-3504	KN-204
		YA-3504	KN-204C
YFM550 Auto 4x4 FI EPS	550		KN-204
			KN-204C
YFM550F Grizzly FI Auto 4x4	558	YA-7007	KN-204
YFM550F Grizzly FI Auto 4x4	558	YA-7007	KN-204C
YFM700F Grizzly FI Auto 4x4 EPS	686	YA-7007	KN-204
		YA-7007	KN-204C
YFM700F Grizzly FI Auto 4x4 EPS SE	686	YA-7007	KN-204
		YA-7007	KN-204C
YFM700R Raptor	700		KN-145
YFM700R Raptor SE	700		KN-145
YFZ450R	450	YA-4504	KN-140
YP125R X-Max	125		KN-141
YP400 Majesty	400		KN-132
YXR700 Rhino FI	700	YA-7008 ♦	KN-204
		YA-7008 ♦	KN-204C
YZ85	85	YA-8502	
YZ125	125	YA-2506XD	
YZ250	250	YA-2506XD	
YZ250F	250	YA-2506XD	KN-140
YZ450F	450	YA-4510	KN-140
YZF R1	998	YA-1009	KN-204
		YA-1009	KN-204C
YZF R1	998 - Race Specific	YA-1009R	KN-204
YZF R6	599	YA-6008	KN-204
		YA-6008	KN-204C
YZF R6	599 - Race Specific	YA-6008R	KN-204
YZF R125	125	YA-1208	KN-141
2011 YAMAHA			
FJR1300A	1300	YA-1301	KN-148
FJR1300AS	1300	YA-1301	KN-148
FZ1	1000	YA-1006	KN-204
		YA-1006	KN-204C
FZ6R	600	YA-6009	KN-204
		YA-6009	KN-204C
FZ8	800	YA-1006	KN-204
		YA-1006	KN-204C
FZ16	153	YA-1611	
FZ150 Fazer	153	YA-1611	
TTR125LE	125	YA-1201	
TTR230	230		KN-143
TW200	200		KN-143
VMX1700 V-Max	1700	YA-1709	KN-303
		YA-1709	KN-303C
VP125 X-City	125		KN-141
WR125R	125	YA-1208	KN-141
WR125X	125	YA-1208	KN-141
WR250F	250	YA-4503	KN-140
WR250R	250	YA-3586	KN-140
WR250X	250	YA-3586	KN-140
WR450F	450	YA-4503	KN-140
XJ6	600	YA-6009	KN-204
		YA-6009	KN-204C
XJ6 Diversion	600	YA-6009	KN-204
		YA-6009	KN-204C
XJR1300	1251	YA-1308	KN-401
XP500 T-Max	500	YA-5008	KN-147
XT250	250		KN-140
XT660R	660	YA-6604	KN-145
XT660X	660	YA-6604	KN-145
XT660Z Tenere	660	YA-6608	KN-145
XT1200Z Super Tenere	1199	YA-1210	KN-204

*Indicates 2 filters required ♦ - Intake kit available - see page 80 Applications updated daily at knfilters.com

Vehicle	Engine Type	Air Filter	Oil Filter
2011 YAMAHA			
XT1200Z Super Tenere	1199	YA-1210	KN-204C
XV250 V-Star	250		KN-145
XV1700 Road Star S	1700	YA-1704	KN-303
		YA-1704	KN-303C
XV1700 Road Star Silverado S	1700	YA-1704	KN-303
		YA-1704	KN-303C
XV1900 Raider	1854	YA-1906	KN-303
		YA-1906	KN-303C
XV1900 Raider S	1854	YA-1906	KN-303
		YA-1906	KN-303C
XV1900 Roadliner S	1900	YA-1906	KN-303
		YA-1906	KN-303C
XV1900 Stratoliner Deluxe	1900	YA-1906	KN-303
		YA-1906	KN-303C
XVS13CA Stryker	1300	YA-1307	KN-204
		YA-1307	KN-204C
XVS650 V-Star Custom	650	YA-6598	KN-145
XVS950 V-Star	950	YA-1307	KN-204
		YA-1307	KN-204C
XVS950 V-Star Tourer	950	YA-1307	KN-204
		YA-1307	KN-204C
XVS1300 V-Star	1300	YA-1307	KN-204
		YA-1307	KN-204C
XVS1300 V-Star Tourer	1300	YA-1307	KN-204
		YA-1307	KN-204C
XVZ1300 Royal Star Venture S	1300	YA-1399	KN-303
		YA-1399	KN-303C
YFM125 Grizzly Auto	125	YA-2088	
YFM125 Raptor	125	YA-2088	
YFM250R Raptor	250	YA-2088	KN-140
YFM350 Grizzly Auto 4x4	350	YA-3504	KN-204
		YA-3504	KN-204C
YFM350 Grizzly Auto 4x4 IRS	350	YA-3504	KN-204
		YA-3504	KN-204C
YFM350R Raptor	350	YA-6602	KN-142
YFM400 Big Bear IRS 4x4	400		KN-142
YFM450 Grizzly Auto 4x4 IRS	450	YA-3504	KN-204
		YA-3504	KN-204C
YFM450FX Wolverine Auto 4x4	450	YA-3504	KN-204
		YA-3504	KN-204C
YFM550F Grizzly FI Auto 4x4	558	YA-7007	KN-204
		YA-7007	KN-204C
YFM550F Grizzly FI Auto 4x4 EPS	558	YA-7007	KN-204
		YA-7007	KN-204C
2011 YAMAHA			
YFM700F Grizzly FI Auto 4x4 EPS	686	YA-7007	KN-204
		YA-7007	KN-204C
YFM700F Grizzly FI Auto 4x4 EPS SE	686	YA-7007	KN-204
		YA-7007	KN-204C
YFM700R Raptor	700		KN-145
YFM700R Raptor SE	700		KN-145
YFZ450R	450	YA-4504	KN-140
YFZ450X	449	YA-4504	KN-140
YP125R X-Max	125		KN-141
YP400 Majesty	400		KN-132
YXR700 Rhino FI	700	YA-7008 ♦	KN-204
		YA-7008 ♦	KN-204C
YZ85	85	YA-8502	
YZ125	125	YA-2506XD	
YZ250	250	YA-2506XD	
YZ250F	250	YA-2506XD	KN-140
YZ450F	450	YA-4510	KN-140
YZF R1	998	YA-1009	KN-204
		YA-1009	KN-204C
YZF R1	998 - Race Specific	YA-1009R	KN-204
YZF R6	599	YA-6008	KN-204
		YA-6008	KN-204C
YZF R6	599 - Race Specific	YA-6008R	KN-204
YZF R15	150 - to 9/11	YA-1208	
YZF R125	125	YA-1208	KN-141
2010 YAMAHA			
FJR1300A	1300	YA-1301	KN-148
FJR1300AS	1300	YA-1301	KN-148
FZ1	1000	YA-1006	KN-204
		YA-1006	KN-204C
FZ6R	600	YA-6009	KN-204
		YA-6009	KN-204C
FZ8	800	YA-1006	KN-204
		YA-1006	KN-204C
FZ16	153	YA-1611	
FZ150 Fazer	153	YA-1611	
MT01	1000	YA-1605	KN-303
		YA-1605	KN-303C
T135	135	YA-1306	
TTR230	230		KN-143
TW200	200		KN-143
VMX1700 V-Max	1700	YA-1709	KN-303
		YA-1709	KN-303C
VP125 X-City	125		KN-141
WR250R	250	YA-3586	KN-140
WR250X	250	YA-3586	KN-140
XJ6	600	YA-6009	KN-204
		YA-6009	KN-204C
XJ6 Diversion	600	YA-6009	KN-204
		YA-6009	KN-204C
XJR1300	1251	YA-1308	KN-401
XP500 T-Max	500	YA-5008	KN-147
XT250	250		KN-140
XT660R	660	YA-6604	KN-145
XT660X	660	YA-6604	KN-145
XT660X Super Motard	660	YA-6604	KN-145
XT660Z Tenere	660	YA-6608	KN-145
XT1200Z Super Tenere	1199	YA-1210	KN-204

*Indicates 2 filters required ♦ - Intake kit available - see page 80 Applications updated daily at knfilters.com

Vehicle	Engine Type	Air Filter	Oil Filter
2010 YAMAHA			
XT1200Z Super Tenere	1199	YA-1210	KN-204C
XV1700 Road Star	1700	YA-1704	KN-303
		YA-1704	KN-303C
XV1700 Road Star S	1700	YA-1704	KN-303
		YA-1704	KN-303C
XV1700 Road Star Silverado	1700	YA-1704	KN-303
		YA-1704	KN-303C
XV1900 Raider	1854	YA-1906	KN-303
		YA-1906	KN-303C
XV1900 Raider S	1854	YA-1906	KN-303
		YA-1906	KN-303C
XV1900 Roadliner S	1900	YA-1906	KN-303
		YA-1906	KN-303C
XV1900 Stratoliner	1900	YA-1906	KN-303
		YA-1906	KN-303C
XV1900 Stratoliner Deluxe	1900		KN-303
			KN-303C
XV1900 Stratoliner S	1900		KN-303
			KN-303C
XVS650 V-Star Classic	650	YA-6598	KN-145
XVS650 V-Star Custom	650	YA-6598	KN-145
XVS650 V-Star Silverado	650	YA-6598	KN-145
XVS950 V-Star	950	YA-1307	KN-204
		YA-1307	KN-204C
XVS1300 V-Star Tourer	1300	YA-1307	KN-204
		YA-1307	KN-204C
XVZ1300 Royal Star Tour Deluxe	1300	YA-1399	KN-303
		YA-1399	KN-303C
XVZ1300 Royal Star Venture	1300	YA-1399	KN-303
		YA-1399	KN-303C
XVZ1300 Royal Star Venture S	1300	YA-1399	KN-303
		YA-1399	KN-303C
YFM250R Raptor	250	YA-2088	KN-140
YFM350 Grizzly Auto 4x4	350	YA-3504	KN-204
		YA-3504	KN-204C
YFM350 Grizzly Auto 4x4 IRS	350	YA-3504	KN-204
		YA-3504	KN-204C
YFM350R Raptor	350	YA-6602	KN-142
YFM400 Big Bear IRS 4x4	400		KN-142
YFM450 Grizzly Auto 4x4 IRS	450	YA-3504	KN-204
		YA-3504	KN-204C
YFM450FX Wolverine Auto 4x4	450	YA-3504	KN-204
		YA-3504	KN-204C
YFM550F Grizzly FI Auto 4x4	558	YA-7007	KN-204

Vehicle	Engine Type	Air Filter	Oil Filter
2010 YAMAHA			
YFM550F Grizzly FI Auto 4x4	558	YA-7007	KN-204C
YFM550F Grizzly FI Auto 4x4 EPS	558	YA-7007	KN-204
		YA-7007	KN-204C
YFM700F Grizzly FI Auto 4x4 EPS	686	YA-7007	KN-204
		YA-7007	KN-204C
YFM700F Grizzly FI Auto 4x4 EPS SE	686	YA-7007	KN-204
		YA-7007	KN-204C
YFM700R Raptor	700		KN-145
YFM700R Raptor SE	700		KN-145
YFZ450 RSE Special Edition	449		KN-140
YFZ450R	450	YA-4504	KN-140
YFZ450X	450	YA-4504	KN-140
YFZ450X Bill Ballance	450		KN-140
YP400 Majesty	400		KN-132
YZ125	125	YA-2506XD	
YZ250	250	YA-2506XD	
YZ250F	250	YA-2506XD	KN-140
YZ450F	450	YA-4510	KN-140
YZF R1	998	YA-1009	KN-204
		YA-1009	KN-204C
YZF R1	998 - Race Specific	YA-1009R	KN-204
YZF R6	599	YA-6008	KN-204
		YA-6008	KN-204C
YZF R6	599 - Race Specific	YA-6008R	KN-204
YZF R6S	599		KN-303
			KN-303C
YZF R15	150	YA-1208	
YZF R125	125	YA-1208	KN-141
2009 YAMAHA			
FAT1100 212SS	998		KN-204
			KN-204C
FAT1100 212SS Eng 2	998		KN-204
			KN-204C
FAT1100 212X Eng 1	998		KN-204
			KN-204C
FJR1300A	1300	YA-1301	KN-148
FJR1300AE	1300		KN-148
FJR1300AS	1300	YA-1301	KN-148
FRT1100 AR210 Eng 1	998		KN-204
			KN-204C
FX10 Nytro	998		KN-147
FX10MT Nytro MTX	998		KN-147
FX10MTR Nytro MTX	1049		KN-147
FX10RTR Nytro RTX	998		KN-147
FX10RTRS Nytro RTX SE	1049		KN-147
FX10XT Nytro XTX	1049		KN-147
FZ1	1000	YA-1006	KN-204
		YA-1006	KN-204C
FZ6	600	YA-6004	KN-204
		YA-6004	KN-204C
FZ6 Fazer S2	600		KN-204
			KN-204C

*Indicates 2 filters required ♦ - Intake kit available - see page 80 Applications updated daily at knfilters.com

2009 YAMAHA

Vehicle	Engine Type	Air Filter	Oil Filter
FZ6 S2	600	YA-6004	KN-204
		YA-6004	KN-204C
FZ6R	600	YA-6009	KN-204
		YA-6009	KN-204C
FZ16	153	YA-1611	
FZ150 Fazer	153	YA-1611	
MT01	1700	YA-1605	KN-303
		YA-1605	KN-303C
RS90GT Vector GT	973		KN-147
RS90R RS Vector ER	973		KN-147
RST90GT RS Venture GT	953		KN-147
RX10GT Apex GT	977		KN-204
			KN-204C
RX10R Apex ER	1000		KN-204
			KN-204C
SXT1100 232 Limited S	1100		KN-204
			KN-204C
T135	135	YA-1306	
TTR125LE	125	YA-1201	
TTR230	230		KN-143
TW200	200		KN-143
VMX1700 V-Max	1700	YA-1709	KN-303
		YA-1709	KN-303C
VP125 X-City	125		KN-141
VX1100	1100		KN-204
			KN-204C
VX1100 WaveRunner Cruiser	1100		KN-204
			KN-204C
VX1100 WaveRunner Deluxe	1100		KN-204
			KN-204C
VX1100 WaveRunner Sport	1100		KN-204
			KN-204C
WR125R	125	YA-1208	KN-141
WR125X	125	YA-1208	KN-141
WR250F	250	YA-4503	KN-140
WR250R	250	YA-3586	KN-140
WR250X	250	YA-3586	KN-140
WR450F	450	YA-4503	KN-140
XC125 Cygnus X	125	YA-1202	
XJ6 Diversion	600	YA-6009	KN-204
		YA-6009	KN-204C
XP500 T-Max	500	YA-5008	KN-147
XT250	250		KN-140
XT660R	660	YA-6604	KN-145
XV250 Virago	250		KN-145
XV250 V-Star	250		KN-145
XV1700 Road Star	1700	YA-1704	KN-303
		YA-1704	KN-303C
XV1700 Road Star Midnight Warrior	1700	YA-1602	KN-303
		YA-1602	KN-303C
XV1700 Road Star S	1700	YA-1704	KN-303
		YA-1704	KN-303C
XV1700 Road Star Silverado	1700	YA-1704	KN-303
		YA-1704	KN-303C

2009 YAMAHA

Vehicle	Engine Type	Air Filter	Oil Filter
XV1700 Road Star Silverado S	1700	YA-1704	KN-303
		YA-1704	KN-303C
XV1700 Road Star Warrior	1670	YA-1602	KN-303
		YA-1602	KN-303C
XV1900 Raider	1900	YA-1906	KN-303
		YA-1906	KN-303C
XV1900 Raider S	1900	YA-1906	KN-303
		YA-1906	KN-303C
XV1900 Roadliner	1900		KN-303
			KN-303C
XV1900 Roadliner Midnight	1900	YA-1906	KN-303
		YA-1906	KN-303C
XV1900 Roadliner S	1900	YA-1906	KN-303
		YA-1906	KN-303C
XV1900 Stratoliner	1900	YA-1906	KN-303
		YA-1906	KN-303C
XV1900 Stratoliner S	1900	YA-1906	KN-303
		YA-1906	KN-303C
XVS650 V-Star Classic	650	YA-6598	KN-145
XVS650 V-Star Custom	650	YA-6598	KN-145
XVS650 V-Star Midnight Custom	650	YA-6598	KN-145
XVS650 V-Star Silverado	650	YA-6598	KN-145
XVS950 V-Star	950	YA-1307	KN-204
		YA-1307	KN-204C
XVS950 V-Star Tourer	950	YA-1307	KN-204
		YA-1307	KN-204C
XVS1100 V-Star Classic	1100	YA-1199	KN-145
XVS1100 V-Star Custom	1100	YA-1199	KN-145
XVS1100 V-Star Midnight Custom	1100	YA-1199	KN-145
XVS1100 V-Star Silverado	1100	YA-1199	KN-145
XVS1300 V-Star	1300	YA-1307	KN-147
XVS1300 V-Star Tourer	1300	YA-1307	KN-147
XVZ1300 Royal Star Tour Deluxe	1300	YA-1399	KN-303
		YA-1399	KN-303C
XVZ1300 Royal Star Tour Deluxe S	1300		KN-303
			KN-303C
XVZ1300 Royal Star Venture	1300	YA-1399	KN-303
		YA-1399	KN-303C
XVZ1300 Royal Star Venture S	1300	YA-1399	KN-303
		YA-1399	KN-303C
YFM125 Grizzly Auto	125	YA-2088	
YFM250 Big Bear	230	YA-4001	KN-143
YFM250 RSE Raptor SE	250		KN-140
YFM250R Raptor	250	YA-2088	KN-140

*Indicates 2 filters required ♦ - Intake kit available - see page 80 Applications updated daily at knfilters.com

Vehicle	Engine Type	Air Filter	Oil Filter
2009 YAMAHA			
YFM350 Grizzly Auto 2x4	346	YA-3504	KN-204
		YA-3504	KN-204C
YFM350 Grizzly Auto 4x4	346	YA-3504	KN-204
		YA-3504	KN-204C
YFM350 Grizzly Auto 4x4 IRS	346	YA-3504	KN-204
		YA-3504	KN-204C
YFM350R Raptor	350	YA-6602	KN-142
YFM350X Wolverine 2x4	350	YA-3504	KN-204
		YA-3504	KN-204C
YFM400 Big Bear IRS 4x4	400	YA-4001	KN-142
YFM450 Grizzly Auto 4x4	450		KN-204
			KN-204C
YFM450 Grizzly Auto 4x4 Hunter	450		KN-204
			KN-204C
YFM450 Grizzly Auto 4x4 IRS	450	YA-3504	KN-204
		YA-3504	KN-204C
YFM450FX Wolverine Auto 4x4	450	YA-3504	KN-204
		YA-3504	KN-204C
YFM550F Grizzly FI Auto 4x4	558	YA-7007	KN-204
		YA-7007	KN-204C
YFM550F Grizzly FI Auto 4x4 EPS	558	YA-7007	KN-204
		YA-7007	KN-204C
YFM700F Grizzly FI Auto 4x4	686	YA-7007	KN-204
		YA-7007	KN-204C
YFM700F Grizzly FI Auto 4x4 EPS	686	YA-7007	KN-204
		YA-7007	KN-204C
YFM700F Grizzly FI Auto 4x4 EPS SE	686	YA-7007	KN-204
		YA-7007	KN-204C
YFM700R Raptor	700		KN-145
YFM700R Raptor SE	700		KN-145
YFZ450	449	YA-4504	KN-140
YFZ450 RSE Special Edition	449		KN-140
YFZ450R	449	YA-4504	KN-140
YJ125 Vino	125		KN-143
YP400 Majesty	400		KN-132
YXR450 Rhino Auto 4x4	450	YA-6504	KN-204
		YA-6504	KN-204C
YXR700 Rhino FI	700	YA-7008 ♦	KN-204
		YA-7008 ♦	KN-204C
YZ85	85	YA-8502	
YZ125	125	YA-2506XD	

Vehicle	Engine Type	Air Filter	Oil Filter
2009 YAMAHA			
YZ250	250	YA-2506XD	
YZ250F	250	YA-2506XD	KN-140
YZ450F	450	YA-2506XD	KN-140
YZF R1	998	YA-1009	KN-204
		YA-1009	KN-204C
YZF R1	998 - Race Specific	YA-1009R	KN-204
YZF R6	599	YA-6008	KN-204
		YA-6008	KN-204C
YZF R6	599 - Race Specific	YA-6008R	KN-204
YZF R6S	599	YA-6001	KN-303
		YA-6001	KN-303C
YZF R15	150	YA-1208	
YZF R125	125	YA-1208	KN-141
2008 YAMAHA			
CP250 Morphous	250		KN-132
FAT1100 212SS	998		KN-204
			KN-204C
FAT1100 212SS Eng 2	998		KN-204
			KN-204C
FAT1100 212X Eng 1	998		KN-204
			KN-204C
FJR1300A	1300	YA-1301	KN-148
FJR1300AE	1300		KN-148
FJR1300AS	1300	YA-1301	KN-148
FRT1100 AR210 Eng 1	998		KN-204
			KN-204C
FRT1100 AR210 Eng 2	998		KN-204
			KN-204C
FRT1100 SX210 Eng 2	998		KN-204
			KN-204C
FX10 Nytro	998		KN-147
FX10MT Nytro MTX	998		KN-147
FX10RT Nytro RTX	1049		KN-147
FX10RTR Nytro RTX	998		KN-147
FX1000 WaveRunner Cruiser	998		KN-204
			KN-204C
FX1000 WaveRunner FX	998		KN-204
			KN-204C
FX1100 WaveRunner H.O.	998		KN-204
			KN-204C
FZ1	1000	YA-1006	KN-204
		YA-1006	KN-204C
FZ1N	1000	YA-1006	KN-204
		YA-1006	KN-204C
FZ1S	1000	YA-1006	KN-204
		YA-1006	KN-204C
FZ6	600	YA-6004	KN-204
		YA-6004	KN-204C
FZ6 Fazer S2	600	YA-6004	KN-204
		YA-6004	KN-204C
FZ6 S2	600	YA-6004	KN-204
		YA-6004	KN-204C

*Indicates 2 filters required ♦ - Intake kit available - see page 80 Applications updated daily at knfilters.com

2008 YAMAHA

Vehicle	Engine Type	Air Filter	Oil Filter
FZ6N	600	YA-6004	KN-204
		YA-6004	KN-204C
FZ6S	600	YA-6004	KN-204
		YA-6004	KN-204C
FZ16	153	YA-1611	
MT01	1700	YA-1605	KN-303
		YA-1605	KN-303C
MT03	660	YA-6604	KN-145
PZ50GT Phazer GT	499		KN-147
RS90 RS Vector	973		KN-147
RX10LT Apex LTX	1000		KN-204
			KN-204C
SR400	400	YA-4092	KN-145
SXT1100 AR230 H.O. Eng 1	998		KN-204
			KN-204C
SXT1100 AR230 H.O. Eng 2	998		KN-204
			KN-204C
SXT1100 SX230 H.O.	998		KN-204
			KN-204C
SXT1100 SX230 H.O. Eng 2	998		KN-204
			KN-204C
TTR125E	125	YA-1201	
TTR125LE	125	YA-1201	
TTR230	230		KN-143
TW200	200		KN-143
VX1100 WaveRunner Cruiser	998		KN-204
			KN-204C
VX1100 WaveRunner Deluxe	998		KN-204
			KN-204C
VX1100 WaveRunner Sport	998		KN-204
			KN-204C
VX1100 WaveRunner VX	998		KN-204
			KN-204C
WR250F	250	YA-4503	KN-141
WR250R	250	YA-3586	KN-141
WR250X	250	YA-3586	KN-141
WR450F	450	YA-4503	KN-141
XC125 Cygnus X	125	YA-1202	
XJR1300	1251	YA-1308	KN-401
XP500 T-Max	500	YA-5008	KN-147
XT250	250		KN-141
XT250X	250		KN-141
XT660	660	YA-6604	KN-145
XT660R	660	YA-6604	KN-145
XT660X Super Motard	660	YA-6604	KN-145
XT660Z Tenere	660	YA-6608	KN-145
XV250 Virago	250		KN-145
XV250 V-Star	250		KN-145
XV1700 Road Star	1700	YA-1704	KN-303
		YA-1704	KN-303C
XV1700 Road Star Midnight Warrior	1700	YA-1602	KN-303

2008 YAMAHA

Vehicle	Engine Type	Air Filter	Oil Filter
XV1700 Road Star Midnight Warrior	1700	YA-1602	KN-303C
XV1700 Road Star S	1700	YA-1704	KN-303
		YA-1704	KN-303C
XV1700 Road Star Silverado	1700	YA-1704	KN-303
		YA-1704	KN-303C
XV1700 Road Star Silverado S	1700	YA-1704	KN-303
		YA-1704	KN-303C
XV1700 Road Star Warrior	1670	YA-1602	KN-303
		YA-1602	KN-303C
XV1900 Raider	1900	YA-1906	KN-303
		YA-1906	KN-303C
XV1900 Raider S	1900	YA-1906	KN-303
		YA-1906	KN-303C
XV1900 Roadliner	1900		KN-303
			KN-303C
XV1900 Roadliner Midnight	1900	YA-1906	KN-303
		YA-1906	KN-303C
XV1900 Roadliner S	1900	YA-1906	KN-303
		YA-1906	KN-303C
XV1900 Stratoliner	1900		KN-303
			KN-303C
XV1900 Stratoliner Midnight	1900	YA-1906	KN-303
		YA-1906	KN-303C
XV1900 Stratoliner S	1900	YA-1906	KN-303
		YA-1906	KN-303C
XVS650 V-Star Classic	650	YA-6598	KN-145
XVS650 V-Star Custom	650	YA-6598	KN-145
XVS650 V-Star Midnight Custom	650	YA-6598	KN-145
XVS650 V-Star Silverado	650	YA-6598	KN-145
XVS1100 V-Star Classic	1100	YA-1199	KN-145
XVS1100 V-Star Custom	1100	YA-1199	KN-145
XVS1100 V-Star Midnight Custom	1100	YA-1199	KN-145
XVS1100 V-Star Silverado	1100	YA-1199	KN-145
XVS1300 V-Star	1300	YA-1307	KN-147
XVS1300 V-Star Tourer	1300	YA-1307	KN-147
XVZ1300 Royal Star Tour Deluxe	1300	YA-1399	KN-303
		YA-1399	KN-303C
XVZ1300 Royal Star Tour Deluxe S	1300	YA-1399	KN-303
		YA-1399	KN-303C
XVZ1300 Royal Star Venture	1300	YA-1399	KN-303
		YA-1399	KN-303C
XVZ1300 Royal Star Venture S	1300	YA-1399	KN-303

*Indicates 2 filters required ♦ - Intake kit available - see page 80 Applications updated daily at knfilters.com

Vehicle	Engine Type	Air Filter	Oil Filter
2008 YAMAHA			
XVZ1300 Royal Star Venture S	1300	YA-1399	KN-303C
YFM80 Raptor	80	YA-8002	
YFM125 Grizzly Auto	125	YA-2088	
YFM250 Big Bear	230	YA-4001	KN-143
YFM250R Raptor	250	YA-2088	KN-140
YFM250R Raptor SE	250	YA-2088	KN-140
YFM250R Raptor SE Custom	250	YA-2088	KN-140
YFM350 Grizzly Auto 2x4	346	YA-3504	KN-204
		YA-3504	KN-204C
YFM350 Grizzly Auto 4x4	346	YA-3504	KN-204
		YA-3504	KN-204C
YFM350 Grizzly Auto 4x4 IRS	346	YA-3504	KN-204
		YA-3504	KN-204C
YFM350R Raptor	348	YA-6602	KN-142
YFM350X Wolverine 2x4	350	YA-3504	KN-204
		YA-3504	KN-204C
YFM400 Big Bear IRS 4x4	400	YA-4001	KN-142
YFM400 Grizzly Auto 4x4	400	YA-3504	KN-204
		YA-3504	KN-204C
YFM450 Grizzly Auto 4x4	450	YA-3504	KN-204
		YA-3504	KN-204C
YFM450FX Wolverine 4x4	450	YA-3504	KN-204
		YA-3504	KN-204C
YFM660 Grizzly Auto 4x4	660	YA-6602	KN-204
		YA-6602	KN-204C
YFM700F Grizzly FI Auto 4x4	686	YA-7007	KN-204
		YA-7007	KN-204C
YFM700F Grizzly FI Auto 4x4 EPS	686	YA-7007	KN-204
		YA-7007	KN-204C
YFM700R Raptor	700		KN-145
YFM700R Raptor SE	700		KN-145
YFZ450	449	YA-4504	KN-140
YFZ450 RSE Special Edition	449		KN-140
YFZ450 SE	449	YA-4504	KN-140
YJ125 Vino	125		KN-143
YP125R X-Max	125		KN-141
YP400 Majesty	400		KN-132
YXR450 Rhino Auto 4x4	450	YA-6504	KN-204
		YA-6504	KN-204C
YXR700 Rhino FI	700	YA-7008 ♦	KN-204
		YA-7008 ♦	KN-204C
YZ85	85	YA-8502	
YZ125	125	YA-2506XD	
YZ250	250	YA-2506XD	KN-141

Vehicle	Engine Type	Air Filter	Oil Filter
2008 YAMAHA			
YZ250F	250	YA-2506XD	KN-141
YZ450F	450	YA-2506XD	KN-141
YZF R1	998	YA-1007	KN-204
		YA-1007	KN-204C
YZF R6	599	YA-6008	KN-204
		YA-6008	KN-204C
YZF R6	599 - Race Specific	YA-6008R	KN-204
YZF R6S	599	YA-6001	KN-303
		YA-6001	KN-303C
YZF R15	150	YA-1208	
YZF R125	125	YA-1208	KN-141
2007 YAMAHA			
CP250 Morphous	250		KN-132
FJR1300A	1300	YA-1301	KN-148
FJR1300AE	1300		KN-148
FJR1300AS	1300	YA-1301	KN-148
FRT1100 AR210 Eng 1	998		KN-303
			KN-303C
FRT1100 AR210 Eng 2	998		KN-303
			KN-303C
FX1000 WaveRunner Cruiser	998		KN-303
			KN-303C
FX1000 WaveRunner FX	998		KN-303
			KN-303C
FX1100 WaveRunner FX Cruiser H.O.	998		KN-303
			KN-303C
FZ1	1000	YA-1006	KN-204
		YA-1006	KN-204C
FZ6	600	YA-6004	KN-204
		YA-6004	KN-204C
FZ6 Fazer	600	YA-6004	KN-204
		YA-6004	KN-204C
FZ6 Fazer S2	600	YA-6004	KN-204
		YA-6004	KN-204C
FZ6 S2	600	YA-6004	KN-204
		YA-6004	KN-204C
MT01	1700	YA-1605	KN-303
		YA-1605	KN-303C
PZ50 Phazer	500		KN-147
PZ50FX Phazer FX	500		KN-147
PZ50GT Phazer GT	499		KN-147
RS90GT Vector GT	953		KN-147
RS90M RS Vector Mountain	953		KN-147
RSG90GT RS Rage GT	953		KN-147
RX10GT Apex GT	977		KN-204
			KN-204C
RX10RT Apex RTX	977		KN-204
			KN-204C
SXT1100 AR230 H.O. Eng 1	998		KN-303
			KN-303C
SXT1100 AR230 H.O. Eng 2	998		KN-303

*Indicates 2 filters required ♦ - Intake kit available - see page 80 Applications updated daily at knfilters.com

2007 YAMAHA

Vehicle	Engine Type	Air Filter	Oil Filter
SXT1100 AR230 H.O. Eng 2	998		KN-303C
SXT1100 SX230 H.O.	998		KN-303
			KN-303C
SXT1100 SX230 H.O. Eng 2	998		KN-303
			KN-303C
T135	135	YA-1306	
TTR90E	90	YA-9001	
TTR125E	125	YA-1201	
TTR125L	125	YA-1201	
TTR125LE	125	YA-1201	
TTR125LW	125	YA-1201	
TTR230	230		KN-143
TW200	200		KN-143
VMX1200 V-Max	1200	YA-1285	KN-303
		YA-1285	KN-303C
VP125 X-City	125		KN-141
VX1100 WaveRunner Cruiser	998		KN-303
			KN-303C
VX1100 WaveRunner Deluxe	998		KN-303
			KN-303C
VX1100 WaveRunner Sport	998		KN-303
			KN-303C
VX1100 WaveRunner VX	998		KN-303
			KN-303C
WR250F	250	YA-4503	KN-141
WR250R	250	YA-3586	KN-141
WR250X	250	YA-3586	KN-141
WR450F	450	YA-4503	KN-141
XC125SR Cygnus X SR	125	YA-1202	
XJR1300	1251	YA-1308	KN-401
XT225	225	YA-2292	KN-143
XT660R	660	YA-6604	KN-145
XV250 Virago	250		KN-145
XV1700 Road Star	1700	YA-1704	KN-303
		YA-1704	KN-303C
XV1700 Road Star Midnight	1700	YA-1704	KN-303
		YA-1704	KN-303C
XV1700 Road Star Midnight Silverado	1700	YA-1704	KN-303
		YA-1704	KN-303C
XV1700 Road Star Midnight Warrior	1700	YA-1602	KN-303
		YA-1602	KN-303C
XV1700 Road Star Silverado	1700	YA-1704	KN-303
		YA-1704	KN-303C
XV1700 Road Star Warrior	1670	YA-1602	KN-303
		YA-1602	KN-303C
XV1900 Roadliner	1900	YA-1906	KN-303
		YA-1906	KN-303C

2007 YAMAHA

Vehicle	Engine Type	Air Filter	Oil Filter
XV1900 Roadliner Midnight	1900	YA-1906	KN-303
		YA-1906	KN-303C
XV1900 Roadliner S	1900	YA-1906	KN-303
		YA-1906	KN-303C
XV1900 Stratoliner	1900	YA-1906	KN-303
		YA-1906	KN-303C
XV1900 Stratoliner Midnight	1900	YA-1906	KN-303
		YA-1906	KN-303C
XV1900 Stratoliner S	1900	YA-1906	KN-303
		YA-1906	KN-303C
XVS650 V-Star Classic	650	YA-6598	KN-145
XVS650 V-Star Custom	650	YA-6598	KN-145
XVS650 V-Star Midnight Custom	650	YA-6598	KN-145
XVS650 V-Star Silverado	650	YA-6598	KN-145
XVS1100 V-Star Classic	1100	YA-1199	KN-145
XVS1100 V-Star Custom	1100	YA-1199	KN-145
XVS1100 V-Star Midnight Custom	1100	YA-1199	KN-145
XVS1100 V-Star Silverado	1100	YA-1199	KN-145
XVS1300 V-Star	1300	YA-1307	KN-147
XVS1300 V-Star Tourer	1300	YA-1307	KN-147
XVZ1300 Royal Star Midnight Tour Deluxe	1300	YA-1399	KN-303
		YA-1399	KN-303C
XVZ1300 Royal Star Midnight Venture	1300	YA-1399	KN-303
		YA-1399	KN-303C
XVZ1300 Royal Star Tour Deluxe	1300	YA-1399	KN-303
		YA-1399	KN-303C
XVZ1300 Royal Star Venture	1300	YA-1399	KN-303
		YA-1399	KN-303C
YFM50 Raptor	50	YA-8002	
YFM80 Raptor	80	YA-8002	
YFM125 Grizzly	125	YA-2088	
YFM250 Big Bear	230	YA-4001	KN-143
YFM350 Grizzly Auto 2x4	346	YA-3504	KN-204
		YA-3504	KN-204C
YFM350 Grizzly Auto 4x4	346	YA-3504	KN-204
		YA-3504	KN-204C
YFM350 Grizzly Auto 4x4 IRS	346	YA-3504	KN-204
		YA-3504	KN-204C
YFM350R Raptor	350	YA-6602	KN-142
YFM350X Wolverine 2x4	350	YA-3504	KN-204
		YA-3504	KN-204C

2007 YAMAHA

Vehicle	Engine Type	Air Filter	Oil Filter
YFM400 Big Bear IRS 4x4	400	YA-4001	KN-142
YFM400 Grizzly Auto 4x4	400	YA-3504	KN-204
		YA-3504	KN-204C
YFM450 Grizzly Auto 4x4	450	YA-3504	KN-204
		YA-3504	KN-204C
YFM450FX Wolverine 4x4	450	YA-3504	KN-204
		YA-3504	KN-204C
YFM660 Grizzly Auto 4x4	660	YA-6602	KN-204
		YA-6602	KN-204C
YFM700F Grizzly FI Auto 4x4	686	YA-7007	KN-204
		YA-7007	KN-204C
YFM700R Raptor	700		KN-145
YFM700R Raptor GYTR Edition	700		KN-145
YFM700R Raptor SE	700		KN-145
YFZ450	449	YA-4504	KN-140
YFZ450 Bill Ballance Edition	450		KN-140
YFZ450 SE	449	YA-4504	KN-140
YJ125 Vino	125		KN-143
YP400 Majesty	400		KN-132
YXR450 Rhino Auto 4x4	450	YA-6504	KN-204
		YA-6504	KN-204C
YXR660 Rhino	660	YA-6504	KN-204
		YA-6504	KN-204C
YZ85	85	YA-8502	
YZ125	125	YA-2506XD	
YZ250	250	YA-2506XD	KN-141
YZ250F	250	YA-2506XD	KN-141
YZ450F	450	YA-2506XD	KN-141
YZF R1	998	YA-1007	KN-204
		YA-1007	KN-204C
YZF R6	599	YA-6006	KN-204
		YA-6006	KN-204C
YZF R6S	599	YA-6001	KN-303
		YA-6001	KN-303C
YZF600R	600	YA-6096	KN-303
		YA-6096	KN-303C

2006 YAMAHA

Vehicle	Engine Type	Air Filter	Oil Filter
15PLH	15HP		KN-303
			KN-303C
BT1100 Bulldog	1100	YA-7585	KN-145
CP250 Morphous	250		KN-132
F50TLR	50HP		KN-204
			KN-204C
F75TLR	75HP		KN-303
			KN-303C
F115TXR	115HP		KN-303
			KN-303C
F115TLR	115HP		KN-303
			KN-303C
FJR1300	1300	YA-1301	KN-148
FJR1300A	1300		KN-148
FJR1300AE	1300		KN-148

2006 YAMAHA

Vehicle	Engine Type	Air Filter	Oil Filter
FJR1300AS	1300		KN-148
FRT1100 AR210 Eng 1	998		KN-303
			KN-303C
FRT1100 AR210 Eng 2	998		KN-303
			KN-303C
FRT1100 SX210	998		KN-303
			KN-303C
FRT1100 SX210 Eng 2	998		KN-303
			KN-303C
FX1000 WaveRunner	998		KN-303
			KN-303C
FX1000 WaveRunner Cruiser	998		KN-303
			KN-303C
FX1100 WaveRunner Cruiser H.O.	998		KN-303
			KN-303C
FX1100 WaveRunner H.O.	998		KN-303
			KN-303C
FZ1	1000	YA-1006	KN-204
		YA-1006	KN-204C
FZ1 Fazer	998	YA-1006	KN-204
		YA-1006	KN-204C
FZ1N	1000	YA-1006	KN-204
		YA-1006	KN-204C
FZ1S	1000	YA-1006	KN-204
		YA-1006	KN-204C
FZ6	600	YA-6004	KN-303
		YA-6004	KN-303C
FZ6 Fazer	600	YA-6004	KN-303
		YA-6004	KN-303C
MT01	1700	YA-1605	KN-303
		YA-1605	KN-303C
MT03	660	YA-6604	KN-145
PW80	80	YA-8083	
RS90 RS Vector	973		KN-147
RS90NR Nytro ER	953		KN-147
RSG90 RS Rage	953		KN-147
RX10GT Apex GT	977		KN-204
			KN-204C
RX10R Apex ER	977		KN-204
			KN-204C
RX10RT Apex RTX	977		KN-204
			KN-204C
RX10RTR Apex RTX	1000		KN-204
			KN-204C
RXW10 Attak	977		KN-204
			KN-204C
SRT1000 SX230	1000		KN-303
			KN-303C
SRT1100 AR230 H.O. Eng 1	998		KN-303
			KN-303C
SRT1100 SX230 H.O.	998		KN-303
			KN-303C

*Indicates 2 filters required ♦ - Intake kit available - see page 80 Applications updated daily at knfilters.com

Vehicle	Engine Type	Air Filter	Oil Filter
2006 YAMAHA			
SRT1100 SX230 H.O. Eng 2	998		KN-303
			KN-303C
T50TLR	50HP		KN-204
			KN-204C
T135	135	YA-1306	
TTR90E	90	YA-9001	
TTR125E	125	YA-1201	
TTR125L	125	YA-1201	
TTR125LE	125	YA-1201	
TTR230	230		KN-143
TTR250	250	YA-3586	KN-142
TW200	200		KN-143
VK10 VK Professional	953		KN-147
VMX1200 V-Max	1200	YA-1285	KN-303
		YA-1285	KN-303C
VX1100 WaveRunner Deluxe	998		KN-303
			KN-303C
VX1100 WaveRunner Sport	998		KN-303
			KN-303C
WR250F	250	YA-4503	KN-141
WR450F	450	YA-4503	KN-141
XC125SR Cygnus X SR	125	YA-1202	
XP500 T-Max	500	YA-5001	KN-147
XP500 T-Max Special	500	YA-5001	KN-147
XT225	225	YA-2292	KN-143
XT250	250		KN-141
XT250X	250		KN-141
XT660R	660	YA-6604	KN-145
XV250 Virago	250		KN-145
XV1700 Road Star	1700	YA-1704	KN-303
		YA-1704	KN-303C
XV1700 Road Star Cast Wheels	1700		KN-303
			KN-303C
XV1700 Road Star Midnight	1700	YA-1704	KN-303
		YA-1704	KN-303C
XV1700 Road Star Midnight Silverado	1700	YA-1704	KN-303
		YA-1704	KN-303C
XV1700 Road Star Silverado	1700	YA-1704	KN-303
		YA-1704	KN-303C
XV1700 Road Star Warrior	1670	YA-1602	KN-303
		YA-1602	KN-303C
XV1900 Roadliner	1900	YA-1906	KN-303
		YA-1906	KN-303C
XV1900 Roadliner Midnight	1900	YA-1906	KN-303
		YA-1906	KN-303C
XV1900 Roadliner S	1900	YA-1906	KN-303
		YA-1906	KN-303C
XV1900 Stratoliner	1900	YA-1906	KN-303
		YA-1906	KN-303C

Vehicle	Engine Type	Air Filter	Oil Filter
2006 YAMAHA			
XV1900 Stratoliner Midnight	1900	YA-1906	KN-303
		YA-1906	KN-303C
XV1900 Stratoliner S	1900	YA-1906	KN-303
		YA-1906	KN-303C
XVS650 V-Star Classic	650	YA-6598	KN-145
XVS650 V-Star Custom	650	YA-6598	KN-145
XVS650 V-Star Midnight Custom	650	YA-6598	KN-145
XVS650 V-Star Silverado	650	YA-6598	KN-145
XVS1100 V-Star Classic	1100	YA-1199	KN-145
XVS1100 V-Star Custom	1100	YA-1199	KN-145
XVS1100 V-Star Midnight Custom	1100	YA-1199	KN-145
XVS1100 V-Star Silverado	1100	YA-1199	KN-145
XVZ1300 Royal Star Midnight Tour Deluxe	1300	YA-1399	KN-303
		YA-1399	KN-303C
XVZ1300 Royal Star Midnight Venture	1300	YA-1399	KN-303
		YA-1399	KN-303C
XVZ1300 Royal Star Tour Deluxe	1300	YA-1399	KN-303
		YA-1399	KN-303C
XVZ1300 Royal Star Venture	1300	YA-1399	KN-303
		YA-1399	KN-303C
YFM50 Raptor	50	YA-8002	
YFM80 Raptor	80	YA-8002	
YFM125 Grizzly	125	YA-2088	
YFM250 Bruin	230	YA-4001	KN-143
YFM350 Bruin Auto 2x4	350	YA-3504	KN-303
		YA-3504	KN-303C
YFM350 Bruin Auto 4x4	350	YA-3504	KN-303
		YA-3504	KN-303C
YFM350 Bruin Auto 4x4 Hunter	350		KN-303
			KN-303C
YFM350R Raptor	350	YA-6602	KN-142
YFM350X Wolverine 2x4	350	YA-3504	KN-204
		YA-3504	KN-204C
YFM400 Big Bear 4x4	384	YA-4001	KN-142
YFM400 Kodiak Auto 4x4	384	YA-3504	KN-303
		YA-3504	KN-303C
YFM450 Kodiak Auto 4x4	416	YA-3504	KN-303
		YA-3504	KN-303C
YFM450FX Wolverine 4x4	450	YA-3504	KN-303

2006 YAMAHA

Vehicle	Engine Type	Air Filter	Oil Filter
YFM450FX Wolverine 4x4	450	YA-3504	KN-303C
YFM660 Grizzly Auto 4x4	660	YA-6602	KN-303
		YA-6602	KN-303C
YFM700R Raptor	700		KN-145
YFS200 Blaster	200	YA-2088	
YFZ350 Banshee	350	YA-3502	
YFZ450	449	YA-4504	KN-141
YJ125 Vino	125		KN-143
YP400 Majesty	400		KN-132
YXR450 Rhino Auto 4x4	450	YA-6504	KN-303
		YA-6504	KN-303C
YXR660 Rhino	660	YA-6504	KN-303
		YA-6504	KN-303C
YZ85	85	YA-8502	
YZ125	125	YA-2506XD	
YZ250	250	YA-2506XD	KN-141
YZ250F	250	YA-2506XD	KN-141
YZ450F	450	YA-2506XD	KN-141
YZF R1	998	YA-1004	KN-303
		YA-1004	KN-303C
YZF R1 LE	1000	YA-1004	KN-303
		YA-1004	KN-303C
YZF R1 SP	1000	YA-1004	KN-303
		YA-1004	KN-303C
YZF R6	599	YA-6006	KN-204
		YA-6006	KN-204C
YZF R6S	599	YA-6001	KN-303
		YA-6001	KN-303C
YZF600R	600	YA-6096	KN-303
		YA-6096	KN-303C

2005 YAMAHA

Vehicle	Engine Type	Air Filter	Oil Filter
BT1100 Bulldog	1100	YA-7585	KN-145
FJR1300	1300	YA-1301	KN-148
FJR1300A	1300		KN-148
FJR1300AE	1300		KN-148
FX1000 WaveRunner	998		KN-303
			KN-303C
FX1000 WaveRunner Cruiser	998		KN-303
			KN-303C
FX1100 WaveRunner Cruiser H.O.	998		KN-303
			KN-303C
FX1100 WaveRunner H.O.	998		KN-303
			KN-303C
FZ1	1000	YA-1001	KN-303
		YA-1001	KN-303C
FZ6	600	YA-6004	KN-303
		YA-6004	KN-303C
FZ6 Fazer	600	YA-6004	KN-303
		YA-6004	KN-303C
FZS1000 Fazer	1000	YA-1001	KN-303
		YA-1001	KN-303C
MT01	1700	YA-1605	KN-303
		YA-1605	KN-303C
PW80	80	YA-8083	
RS90 RS Vector	953		KN-147

2005 YAMAHA

Vehicle	Engine Type	Air Filter	Oil Filter
RS90R RS Vector ER	953		KN-147
RSG90 RS Rage	953		KN-147
RX10 RX-1	1000		KN-303
			KN-303C
RX10M RX-1 Mountain	1000		KN-303
			KN-303C
RX10R RX-1 ER	1000		KN-303
			KN-303C
RXW10 RX Warrior	1000		KN-303
			KN-303C
SR400	400	YA-4092	KN-145
SRT1000 AR230 Eng 1	998		KN-303
			KN-303C
SRT1000 SR230 Eng 2	998		KN-303
			KN-303C
SRT1000 SX230	998		KN-303
			KN-303C
SRT1000 SX230 Eng 2	998		KN-303
			KN-303C
SRT1100 AR230 H.O. Eng 1	998		KN-303
			KN-303C
SRT1100 SX230 H.O.	998		KN-303
			KN-303C
SRT1100 SX230 H.O. Eng 2	998		KN-303
			KN-303C
TDM900	897	YA-9002	KN-145
TTR90E	90	YA-9001	
TTR125E	125	YA-1201	
TTR125L	125	YA-1201	
TTR125LE	125	YA-1201	
TTR230	230		KN-143
TTR250	250	YA-3586	KN-142
TW200	200		KN-143
VMX1200 V-Max	1200	YA-1285	KN-303
		YA-1285	KN-303C
VX1100 WaveRunner Deluxe	998		KN-303
			KN-303C
VX1100 WaveRunner Sport	998		KN-303
			KN-303C
WR250F	250	YA-4503	KN-141
WR450F	450	YA-4503	KN-141
XC125SR Cygnus X SR	125	YA-1202	
XG250 Tricker	250		KN-141
XJR1300	1235	YA-1295	KN-401
XP500 T-Max	500	YA-5001	KN-147
XT225	225	YA-2292	KN-143
XT660R	660	YA-6604	KN-145
XT660X Super Motard	660	YA-6604	KN-145
XV250 Virago	250		KN-145
XV250S Virago	250		KN-145

*Indicates 2 filters required ♦ - Intake kit available - see page 80 Applications updated daily at knfilters.com

Vehicle	Engine Type	Air Filter	Oil Filter
2005 YAMAHA			
XV1700 Road Star	1700	YA-1704	KN-303
		YA-1704	KN-303C
XV1700 Road Star Cast Wheels	1700		KN-303
			KN-303C
XV1700 Road Star Midnight	1700	YA-1704	KN-303
		YA-1704	KN-303C
XV1700 Road Star Midnight Silverado	1700	YA-1704	KN-303
		YA-1704	KN-303C
XV1700 Road Star Silverado	1700	YA-1704	KN-303
		YA-1704	KN-303C
XV1700 Road Star Warrior	1670	YA-1602	KN-303
		YA-1602	KN-303C
XVS650 V-Star Classic	650	YA-6598	KN-145
XVS650 V-Star Custom	650	YA-6598	KN-145
XVS650 V-Star Silverado	650	YA-6598	KN-145
XVS650A DragStar Classic	650	YA-6598	KN-145
XVS1100 DragStar	1100		KN-145
XVS1100 V-Star Classic	1100	YA-1199	KN-145
XVS1100 V-Star Custom	1100	YA-1199	KN-145
XVS1100 V-Star Silverado	1100	YA-1199	KN-145
XVS1100A DragStar Classic	1100	YA-1199	KN-145
XVZ1300 Royal Star Midnight Venture	1300	YA-1399	KN-303
		YA-1399	KN-303C
XVZ1300 Royal Star Tour Deluxe	1300	YA-1399	KN-303
		YA-1399	KN-303C
XVZ1300 Royal Star Venture	1300	YA-1399	KN-303
		YA-1399	KN-303C
YFM50 Raptor	50	YA-8002	
YFM80 Grizzly	80	YA-8002	
YFM80 Raptor	80	YA-8002	
YFM125 Grizzly	125	YA-2088	
YFM250 Bruin	230	YA-4001	KN-143
YFM350 Bruin Auto 2x4	350	YA-3504	KN-303
		YA-3504	KN-303C
YFM350 Bruin Auto 4x4	350	YA-3504	KN-303
		YA-3504	KN-303C
YFM350 Bruin Auto 4x4 Hunter	350	YA-3504	KN-303
		YA-3504	KN-303C
YFM350FX Wolverine	350	YA-4350	KN-142
YFM350R Raptor	350	YA-6602	KN-142
YFM400 Big Bear 4x4	384	YA-4001	KN-142

Vehicle	Engine Type	Air Filter	Oil Filter
2005 YAMAHA			
YFM400 Kodiak Auto 4x4	384	YA-3504	KN-303
		YA-3504	KN-303C
YFM450 Kodiak Auto 4x4	416	YA-3504	KN-303
		YA-3504	KN-303C
YFM660 Grizzly Auto 4x4	660	YA-6602	KN-303
		YA-6602	KN-303C
YFM660R Raptor	660	YA-6601	KN-147
YFS200 Blaster	200	YA-2088	
YFZ350 Banshee	350	YA-3502	
YFZ450	449	YA-4504	KN-141
YJ125 Vino	125		KN-143
YP125 Majesty	125	YA-2598	
YP400 Majesty	400		KN-132
YXR660 Rhino	660	YA-6504	KN-303
		YA-6504	KN-303C
YZ85	85	YA-8502	
YZ125	125	YA-2506XD	
YZ250	250	YA-2506XD	KN-141
YZ250F	250	YA-2506XD	KN-141
YZ450F	450	YA-2506XD	KN-141
YZF R1	998	YA-1004	KN-303
		YA-1004	KN-303C
YZF R6	599	YA-6001	KN-303
		YA-6001	KN-303C
YZF R46	600		KN-303
			KN-303C
YZF600R	600	YA-6096	KN-303
		YA-6096	KN-303C
2004 YAMAHA			
FJR1300	1300	YA-1301	KN-148
FJR1300A	1300		KN-148
FX1100 WaveRunner Cruiser H.O.	998		KN-303
			KN-303C
FX1100 WaveRunner H.O.	998		KN-303
			KN-303C
FZ1	1000	YA-1001	KN-303
		YA-1001	KN-303C
FZ6	600	YA-6004	KN-303
		YA-6004	KN-303C
FZ6 Fazer	600	YA-6004	KN-303
		YA-6004	KN-303C
PW80	80	YA-8083	
RX10 RX-1	1000		KN-303
			KN-303C
RX10MS RX-1 Mountain LE	1000		KN-303
			KN-303C
RX10R RX-1 ER	1000		KN-303
			KN-303C
RXW10 RX Warrior	1000		KN-303
			KN-303C
RXW10S RX Warrior LE	1000		KN-303
			KN-303C

*Indicates 2 filters required ♦ - Intake kit available - see page 80 Applications updated daily at knfilters.com

Vehicle	Engine Type	Air Filter	Oil Filter
2004 YAMAHA			
SRT1000 SX230	998		KN-303
			KN-303C
SRT1000 SX230 Eng 2	998		KN-303
			KN-303C
TTR90	90	YA-9001	
TTR90E	90	YA-9001	
TTR125	125	YA-1201	
TTR125E	125	YA-1201	
TTR125L	125	YA-1201	
TTR125LE	125	YA-1201	
TTR225	225	YA-2292	KN-143
TTR250	250	YA-3586	KN-142
TW200	200		KN-143
VMX1200 V-Max	1200	YA-1285	KN-303
		YA-1285	KN-303C
WR250F	250	YA-4503	KN-141
WR450F	450	YA-4503	KN-141
XC125SR Cygnus X SR	125	YA-1202	
XJR1300	1235	YA-1295	KN-401
XP500 T-Max	500	YA-5001	KN-147
XT225	225	YA-2292	KN-143
XT660R	660	YA-6604	KN-145
XV250 Virago	250		KN-145
XV1700 Road Star	1700	YA-1704	KN-303
		YA-1704	KN-303C
XV1700 Road Star Midnight	1700	YA-1704	KN-303
		YA-1704	KN-303C
XV1700 Road Star Midnight Silverado	1700	YA-1704	KN-303
		YA-1704	KN-303C
XV1700 Road Star Silverado	1700	YA-1704	KN-303
		YA-1704	KN-303C
XV1700 Road Star Warrior	1670	YA-1602	KN-303
		YA-1602	KN-303C
XVS650 V-Star Classic	650	YA-6598	KN-145
XVS650 V-Star Custom	650	YA-6598	KN-145
XVS650 V-Star Silverado	650	YA-6598	KN-145
XVS1100 DragStar	1100	YA-1199	KN-145
XVS1100 V-Star Classic	1100	YA-1199	KN-145
XVS1100 V-Star Custom	1100	YA-1199	KN-145
XVS1100 V-Star Silverado	1100	YA-1199	KN-145
XVZ1300 Royal Star Midnight Venture	1300	YA-1399	KN-303
		YA-1399	KN-303C
XVZ1300 Royal Star Venture	1300	YA-1399	KN-303
		YA-1399	KN-303C
YFM50 Raptor	50	YA-8002	
YFM80 Raptor	80	YA-8002	
YFM125 Grizzly	125	YA-2088	
YFM250 Bear Tracker	250	YA-4001	KN-143

Vehicle	Engine Type	Air Filter	Oil Filter
2004 YAMAHA			
YFM350 Bruin Auto 2x4	350	YA-3504	KN-303
		YA-3504	KN-303C
YFM350 Bruin Auto 4x4	350	YA-3504	KN-303
		YA-3504	KN-303C
YFM350FX Wolverine	350	YA-4350	KN-142
YFM350R Raptor	350	YA-6602	KN-142
YFM350X Warrior	350	YA-4350	KN-142
YFM400 Big Bear	384	YA-4001	KN-142
YFM400 Big Bear 4x4	384	YA-4001	KN-142
YFM400 Kodiak Auto 2x4	384	YA-3504	KN-303
		YA-3504	KN-303C
YFM400 Kodiak Auto 4x4	384	YA-3504	KN-303
		YA-3504	KN-303C
YFM450 Kodiak Auto 4x4	416	YA-4003	KN-303
		YA-4003	KN-303C
YFM660 Grizzly Auto 4x4	660	YA-6602	KN-303
		YA-6602	KN-303C
YFM660R Raptor	660	YA-6601	KN-147
YFS200 Blaster	200	YA-2088	
YFZ350 Banshee	350	YA-3502	
YFZ450	449	YA-4504	KN-141
YJ125 Vino	125		KN-143
YXR660 Rhino	660	YA-6504	KN-303
		YA-6504	KN-303C
YZ85	85	YA-8502	
YZ125	125	YA-2506XD	
YZ250	250	YA-2506XD	KN-141
YZ250F	250	YA-2506XD	KN-141
YZ450F	450	YA-2506XD	KN-141
YZF R1	998	YA-1004	KN-303
		YA-1004	KN-303C
YZF R6	599	YA-6001	KN-303
		YA-6001	KN-303C
YZF600R	600	YA-6096	KN-303
		YA-6096	KN-303C
2003 YAMAHA			
BT1100 Bulldog	1100	YA-7585	KN-145
Cygnus 125	125	YA-1202	
FJR1300	1300	YA-1301	KN-148
FJR1300A	1300		KN-148
FZ1	1000	YA-1001	KN-303
		YA-1001	KN-303C
FZS600 Fazer	600	YA-6098	KN-147
FZS1000 Fazer	1000	YA-1001	KN-303
		YA-1001	KN-303C
PW80	80	YA-8083	
RS100	100	YA-0102	
RX10 RX-1	1000		KN-303
			KN-303C
RX10M RX-1 Mountain	1000		KN-303
			KN-303C
RX10MS RX-1 Mountain LE	1000		KN-303

*Indicates 2 filters required ♦ - Intake kit available - see page 80 Applications updated daily at knfilters.com

2003 YAMAHA

Vehicle	Engine Type	Air Filter	Oil Filter
RX10MS RX-1 Mountain LE	1000		KN-303C
RX10R RX-1 ER	1000		KN-303
			KN-303C
SR400	400	YA-4092	KN-145
SRT1000 SR230 Eng 2	998		KN-303
			KN-303C
TTR90	90	YA-9001	
TTR125	125	YA-1201	
TTR125E	125	YA-1201	
TTR125L	125	YA-1201	
TTR125LE	125	YA-1201	
TTR225	225	YA-2292	KN-143
TTR250	250	YA-3586	KN-142
TW200	200		KN-143
TW200 Trailway	200		KN-143
VMX1200 V-Max	1200	YA-1285	KN-303
		YA-1285	KN-303C
WR250F	250	YA-4503	KN-141
WR450F	450	YA-4503	KN-141
XJ600 Diversion	600	YA-6092	KN-303
		YA-6092	KN-303C
XJR1300	1235	YA-1295	KN-401
XP500 T-Max	500	YA-5001	KN-147
XT225	225	YA-2292	KN-143
XV250 Virago	250		KN-145
XV1600 Road Star	1600	YA-1699	KN-303
		YA-1699	KN-303C
XV1600 Road Star Ltd. Edition	1600	YA-1699	KN-303
		YA-1699	KN-303C
XV1600 Road Star Midnight	1600	YA-1699	KN-303
		YA-1699	KN-303C
XV1600 Road Star Silverado	1600	YA-1699	KN-303
		YA-1699	KN-303C
XV1600 Road Star Silverado Ltd. Edition	1600	YA-1699	KN-303
		YA-1699	KN-303C
XV1700 Road Star Warrior	1670	YA-1602	KN-303
		YA-1602	KN-303C
XVS650 V-Star Classic	650	YA-6598	KN-145
XVS650 V-Star Custom	650	YA-6598	KN-145
XVS650 V-Star Silverado	650	YA-6598	KN-145
XVS1100 DragStar	1100	YA-1199	KN-145
XVS1100 V-Star Classic	1100	YA-1199	KN-145
XVS1100 V-Star Custom	1100	YA-1199	KN-145
XVS1100 V-Star Silverado	1100	YA-1199	KN-145
XVZ1300 Royal Star Midnight Venture	1300	YA-1399	KN-303
		YA-1399	KN-303C
XVZ1300 Royal Star Venture	1300	YA-1399	KN-303

2003 YAMAHA

Vehicle	Engine Type	Air Filter	Oil Filter
XVZ1300 Royal Star Venture	1300	YA-1399	KN-303C
YFA125 Breeze	125	YA-2088	
YFM80 Raptor	80	YA-8002	
YFM230 Bear Tracker	230		KN-143
YFM250 Bear Tracker	230	YA-4001	KN-143
YFM350FX Wolverine	350	YA-4350	KN-142
YFM350X Warrior	350	YA-4350	KN-142
YFM400 Big Bear	400	YA-4001	KN-142
YFM400 Kodiak Auto 2x4	393	YA-4003	KN-303
		YA-4003	KN-303C
YFM400 Kodiak Auto 4x4	393	YA-4003	KN-303
		YA-4003	KN-303C
YFM450 Kodiak Auto 4x4	489	YA-4003	KN-303
		YA-4003	KN-303C
YFM660 Grizzly	660	YA-6602	KN-303
		YA-6602	KN-303C
YFM660R Raptor	660	YA-6601	KN-147
YFS200 Blaster	200	YA-2088	
YFZ350 Banshee	350	YA-3502	
YZ85	85	YA-8502	
YZ125	125	YA-2506XD	
YZ250	250	YA-2506XD	KN-141
YZ250F	250	YA-2506XD	KN-141
YZ450F	450	YA-2506XD	KN-141
YZF R1	998	YA-1002	KN-303
		YA-1002	KN-303C
YZF R6	599	YA-6001	KN-303
		YA-6001	KN-303C
YZF600R	600	YA-6096	KN-303
		YA-6096	KN-303C

2002 YAMAHA

Vehicle	Engine Type	Air Filter	Oil Filter
FJR1300	1300	YA-1301	KN-148
FZ1	1000	YA-1001	KN-303
		YA-1001	KN-303C
FZS600 Fazer	600	YA-6098	KN-147
FZS1000 Fazer	1000	YA-1001	KN-303
		YA-1001	KN-303C
PW80	80	YA-8083	
SR400	400	YA-4092	KN-145
TTR90	90	YA-9001	
TTR125	125	YA-1201	
TTR125L	125	YA-1201	
TTR225	225	YA-2292	KN-143
TTR250	250	YA-3586	KN-142
TW200	200		KN-143
TW200 Trailway	200		KN-143
VMX1200 V-Max	1200	YA-1285	KN-303
		YA-1285	KN-303C
WR250F	250	YA-2506XD	KN-142
WR426F	426	YA-2506XD	KN-142
XT225	225	YA-2292	KN-143
XV250 Virago	250		KN-145
XV1600 Road Star	1600	YA-1699	KN-303
		YA-1699	KN-303C
XV1600 Road Star Midnight	1600	YA-1699	KN-303
		YA-1699	KN-303C

2002 YAMAHA

Vehicle	Engine Type	Air Filter	Oil Filter
XV1600 Road Star Silverado	1600	YA-1699	KN-303
		YA-1699	KN-303C
XV1700 Road Star Warrior	1670	YA-1602	KN-303
		YA-1602	KN-303C
XVS650 DragStar	650	YA-6598	KN-145
XVS650 V-Star Classic	650	YA-6598	KN-145
XVS650 V-Star Custom	650	YA-6598	KN-145
XVS650 V-Star Silverado	650	YA-6598	KN-145
XVS1100 V-Star Classic	1100	YA-1199	KN-145
XVS1100 V-Star Custom	1100	YA-1199	KN-145
XVS1100 V-Star Silverado	1100	YA-1199	KN-145
XVS1100A DragStar Classic	1100	YA-1199	KN-145
XVZ1300 Royal Star Midnight Venture	1300	YA-1399	KN-303
		YA-1399	KN-303C
XVZ1300 Royal Star Venture	1300	YA-1399	KN-303
		YA-1399	KN-303C
YFM80 Raptor	80	YA-8002	
YFM250 Bear Tracker	230	YA-4001	KN-143
YFM350FX Wolverine	350	YA-4350	KN-142
YFM350X Warrior	350	YA-4350	KN-142
YFM400 Big Bear	400	YA-4001	KN-142
YFM400 Kodiak Auto 4x4	393	YA-4000	KN-303
		YA-4000	KN-303C
YFM660 Grizzly	660	YA-6602	KN-303
		YA-6602	KN-303C
YFM660R Raptor	660	YA-6601	KN-147
YFS200 Blaster	200	YA-2088	
YFZ350 Banshee	350	YA-3502	
YZ125	125	YA-2506XD	
YZ250	250	YA-2506XD	
YZ250F	250	YA-2506XD	KN-142
YZ426F	426	YA-2506XD	KN-142
YZF R1	998	YA-1002	KN-303
		YA-1002	KN-303C
YZF R6	599	YA-6001	KN-303
		YA-6001	KN-303C
YZF600R	600	YA-6096	KN-303
		YA-6096	KN-303C
YZF1000R Thunderace	1000	YA-1089	KN-303
		YA-1089	KN-303C

2001 YAMAHA

Vehicle	Engine Type	Air Filter	Oil Filter
FJR1300	1300	YA-1301	KN-148
FZ1	1000	YA-1001	KN-303
		YA-1001	KN-303C
FZS600 Fazer	600	YA-6098	KN-147
FZS1000 Fazer	1000	YA-1001	KN-303
		YA-1001	KN-303C
PW80	80	YA-8083	
SR400	400	YA-4092	KN-145

2001 YAMAHA

Vehicle	Engine Type	Air Filter	Oil Filter
TTR90	90	YA-9001	
TTR125	125	YA-1201	
TTR125L	125	YA-1201	
TTR225	225	YA-2292	KN-143
TTR250	250	YA-3586	KN-142
TW200 Trailway	200		KN-143
VMX1200 V-Max	1200	YA-1285	KN-303
		YA-1285	KN-303C
WR250F	250	YA-2506XD	KN-142
WR426F	426	YA-2506XD	KN-142
XJR1200	1200	YA-1295	
XJR1300	1235	YA-1295	KN-401
XP500 T-Max	500	YA-5001	KN-147
XT225	225	YA-2292	KN-143
XT350	350		KN-143
XV250 Virago	250		KN-145
XV1600 Road Star	1600	YA-1699	KN-303
		YA-1699	KN-303C
XV1600 Road Star Midnight	1600	YA-1699	KN-303
		YA-1699	KN-303C
XV1600 Road Star Silverado	1600	YA-1699	KN-303
		YA-1699	KN-303C
XVS650 DragStar	650	YA-6598	KN-145
XVS650 V-Star Classic	650	YA-6598	KN-145
XVS650 V-Star Custom	650	YA-6598	KN-145
XVS1100 DragStar	1100	YA-1199	KN-145
XVS1100 V-Star Classic	1100	YA-1199	KN-145
XVS1100 V-Star Custom	1100	YA-1199	KN-145
XVZ1300 Royal Star	1300		KN-303
			KN-303C
XVZ1300 Royal Star Boulevard	1300	YA-1595	KN-303
		YA-1595	KN-303C
XVZ1300 Royal Star Tour Deluxe	1300	YA-1595	KN-303
		YA-1595	KN-303C
XVZ1300 Royal Star Venture	1300	YA-1399	KN-303
		YA-1399	KN-303C
YFA125 Breeze	125	YA-2088	
YFM250 Bear Tracker	230	YA-4001	KN-143
YFM350FX Wolverine	350	YA-4350	KN-142
YFM350X Warrior	350	YA-4350	KN-142
YFM400 Big Bear	400	YA-4001	KN-142
YFM400 Kodiak Auto 2x4	393	YA-4000	KN-303
		YA-4000	KN-303C
YFM400 Kodiak Auto 4x4	393	YA-4000	KN-303
		YA-4000	KN-303C
YFM600 Grizzly	600	YA-4350	KN-145
YFM660R Raptor	660	YA-6601	KN-147
YFS200 Blaster	200	YA-2088	
YFZ350 Banshee	350	YA-3502	
YZ80	80	YA-8096	

*Indicates 2 filters required ♦ - Intake kit available - see page 80 Applications updated daily at knfilters.com

2001 YAMAHA

Vehicle	Engine Type	Air Filter	Oil Filter
YZ125	125	YA-2506XD	
YZ250	250	YA-2506XD	
YZ250F	250	YA-2506XD	KN-142
YZ426F	426	YA-2506XD	KN-142
YZF R1	998	YA-1098	KN-303
		YA-1098	KN-303C
YZF R6	599	YA-6001	KN-303
		YA-6001	KN-303C
YZF600R	600	YA-6096	KN-303
		YA-6096	KN-303C
YZF1000R Thunderace	1000	YA-1089	KN-303
		YA-1089	KN-303C

2000 YAMAHA

Vehicle	Engine Type	Air Filter	Oil Filter
PW80	80	YA-8083	
SR400	400	YA-4092	KN-145
TTR125	125	YA-1201	
TTR125L	125	YA-1201	
TTR225	225	YA-2292	KN-143
TTR250	250	YA-3586	KN-142
VMX1200 V-Max	1200	YA-1285	KN-303
		YA-1285	KN-303C
WR400F	400	YA-2506XD	KN-142
XJR1300	1235	YA-1295	KN-401
XT350	350		KN-143
XV250 Virago	250		KN-145
XV1600 Road Star	1600	YA-1699	KN-303
		YA-1699	KN-303C
XV1600 Road Star MM	1600	YA-1699	KN-303
		YA-1699	KN-303C
XV1600 Road Star Silverado	1600	YA-1699	KN-303
		YA-1699	KN-303C
XVS650 DragStar	650	YA-6598	KN-145
XVS650 V-Star Classic	650	YA-6598	KN-145
XVS650 V-Star Custom	650	YA-6598	KN-145
XVS1100 V-Star Classic	1100	YA-1199	KN-145
XVS1100 V-Star Custom	1100	YA-1199	KN-145
XVZ1300 Royal Star	1300		KN-303
			KN-303C
XVZ1300 Royal Star Boulevard	1300	YA-1595	KN-303
		YA-1595	KN-303C
XVZ1300 Royal Star MM Ltd.	1300	YA-1399	KN-303
		YA-1399	KN-303C
XVZ1300 Royal Star Tour Classic	1300	YA-1595	KN-303
		YA-1595	KN-303C
XVZ1300 Royal Star Tour Deluxe	1300	YA-1595	KN-303
		YA-1595	KN-303C
XVZ1300 Royal Star Venture	1300	YA-1399	KN-303
		YA-1399	KN-303C

2000 YAMAHA

Vehicle	Engine Type	Air Filter	Oil Filter
YFB250 Timberwolf	250	YA-2597	KN-143
YFM250 Bear Tracker	230	YA-4001	KN-143
YFM350FX Wolverine	350	YA-4350	KN-142
YFM350X Warrior	350	YA-4350	KN-142
YFM400 Big Bear	384	YA-4001	KN-142
YFM400 Kodiak Auto 2x4	393	YA-4000	KN-303
		YA-4000	KN-303C
YFM400 Kodiak Auto 4x4	393	YA-4000	KN-303
		YA-4000	KN-303C
YFM600 Grizzly	600	YA-4350	KN-145
YFS200 Blaster	200	YA-2088	
YFZ350 Banshee	350	YA-3502	
YZ80	80	YA-8096	
YZ125	125	YA-2506XD	
YZ250	250	YA-2506XD	
YZ426F	426	YA-2506XD	KN-142
YZF R1	998	YA-1098	KN-303
		YA-1098	KN-303C
YZF R6	599	YA-6001	KN-303
		YA-6001	KN-303C
YZF600R	600	YA-6096	KN-303
		YA-6096	KN-303C

1999 YAMAHA

Vehicle	Engine Type	Air Filter	Oil Filter
FZR600R	600	YA-6089	KN-303
		YA-6089	KN-303C
TRX850	850	YA-8596	KN-145
VMX1200 V-Max	1200	YA-1285	KN-303
		YA-1285	KN-303C
WR400F	400	YA-2506XD	KN-142
XJR1200	1173	YA-1295	KN-401
XJR1300	1300	YA-1295	KN-401
XT350	350		KN-143
XV535 Virago	535		KN-145
XV1100 Virago	1100	YA-1186	KN-145
XV1600 Road Star	1600	YA-1699	KN-303
		YA-1699	KN-303C
XV1600 Road Star Silverado	1600	YA-1699	KN-303
		YA-1699	KN-303C
XVS650 DragStar	650	YA-6598	KN-145
XVS650 V-Star Classic	650	YA-6598	KN-145
XVS650 V-Star Custom	650	YA-6598	KN-145
XVS1100 V-Star	1100	YA-1199	KN-145
XVS1100 V-Star Classic	1100		KN-145
XVS1100A DragStar Classic	1100	YA-1199	KN-145
XVZ1300 Royal Star Boulevard	1300	YA-1595	KN-303
		YA-1595	KN-303C
XVZ1300 Royal Star Tour Classic	1300	YA-1595	KN-303
		YA-1595	KN-303C
XVZ1300 Royal Star Tour Deluxe	1300	YA-1595	KN-303
		YA-1595	KN-303C

*Indicates 2 filters required ♦ - Intake kit available - see page 80 Applications updated daily at knfilters.com

1999 YAMAHA

Vehicle	Engine Type	Air Filter	Oil Filter
XVZ1300 Royal Star Venture	1300	YA-1399	KN-303
		YA-1399	KN-303C
YFM250 Bear Tracker	230	YA-4001	KN-143
YFM350FW Big Bear	384	YA-2597	KN-142
YFM350FX Wolverine	350	YA-4350	KN-142
YFM350X Warrior	350	YA-4350	KN-142
YFM400 Big Bear	400		KN-142
YFM400FW Kodiak	393	YA-2597	KN-142
YFM600 Grizzly	600	YA-4350	KN-145
YFS200 Blaster	200	YA-2088	
YFZ350 Banshee	350	YA-3502	
YZ125	125	YA-2506XD	
YZ250	250	YA-2506XD	
YZ400F	400	YA-2506XD	KN-142
YZF R1	998	YA-1098	KN-303
		YA-1098	KN-303C
YZF R6	599	YA-6001	KN-303
		YA-6001	KN-303C
YZF600R	600	YA-6096	KN-303
		YA-6096	KN-303C

1998 YAMAHA

Vehicle	Engine Type	Air Filter	Oil Filter
FZ400	394		KN-144
FZR600R	600	YA-6089	KN-303
		YA-6089	KN-303C
TDM850	850	YA-7585	KN-145
VMX1200 V-Max	1200	YA-1285	KN-303
		YA-1285	KN-303C
WR400F	400	YA-2506XD	KN-142
XJR1200	1173	YA-1295	KN-401
XJR1300	1300	YA-1295	KN-401
XT350	350		KN-143
XV1100 Virago	1100	YA-1186	KN-145
XVS650 V-Star Classic	650	YA-6598	KN-145
XVS650 V-Star Custom	650	YA-6598	KN-145
XVZ1300 Royal Star	1300	YA-1595	KN-303
		YA-1595	KN-303C
XVZ1300 Royal Star Tour Classic	1300		KN-303
			KN-303C
YFB250 Timberwolf	250	YA-2597	KN-143
YFM350FW Big Bear	346	YA-2597	KN-142
YFM350FX Wolverine	350	YA-4350	KN-142
YFM350X Warrior	350	YA-4350	KN-142
YFM400 Big Bear	400		KN-142
YFM400FW Kodiak	384	YA-2597	KN-142
YFM600 Grizzly	600	YA-4350	KN-145
YFS200 Blaster	200	YA-2088	
YFZ350 Banshee	350	YA-3502	
YZ125	125	YA-2506XD	
YZ250	250	YA-2506XD	
YZ400F	399	YA-2506XD	KN-142
YZF R1	998	YA-1098	KN-303
		YA-1098	KN-303C
YZF600R	600	YA-6096	KN-303
		YA-6096	KN-303C
YZF1000R Thunderace	1000	YA-1089	KN-303
		YA-1089	KN-303C

1997 YAMAHA

Vehicle	Engine Type	Air Filter	Oil Filter
FZR600R	600	YA-6089	KN-303
		YA-6089	KN-303C
SZR660	660	YA-0086	KN-145
TDM850	850	YA-7585	KN-145
TRX850	850	YA-8596	KN-145
VMX1200 V-Max	1200	YA-1285	KN-303
		YA-1285	KN-303C
XJR1300	1300	YA-1295	
XT225 Serow	225	YA-2292	KN-143
XV535 Virago	535		KN-145
XV750 Virago	747	YA-1186	KN-145
XV1100 Virago	1100	YA-1186	KN-145
XVS650 DragStar	650	YA-6598	KN-145
XVZ1300 Royal Star	1300	YA-1595	KN-303
		YA-1595	KN-303C
XVZ1300 Royal Star Tour Classic	1300		KN-303
			KN-303C
YFB250 Timberwolf	250	YA-2597	KN-143
YFM350FW Big Bear	346	YA-2597	KN-142
YFM350FX Wolverine	350	YA-4350	KN-142
YFM350X Warrior	350	YA-4350	KN-142
YFM400 Big Bear	400		KN-142
YFM400FW Kodiak	384	YA-2597	KN-142
YFS200 Blaster	200	YA-2088	
YFZ350 Banshee	350	YA-3502	
YZ250	250	YA-2506XD	
YZF600R	600	YA-6096	KN-303
		YA-6096	KN-303C
YZF750R	741	YA-7593	KN-303
		YA-7593	KN-303C
YZF1000R	1000	YA-1089	KN-303
		YA-1089	KN-303C

1996 YAMAHA

Vehicle	Engine Type	Air Filter	Oil Filter
FZR600R	600	YA-6089	KN-303
		YA-6089	KN-303C
SR400	400	YA-4092	KN-145
VMX1200 V-Max	1200	YA-1285	KN-303
		YA-1285	KN-303C
XJ600 Seca II	581	YA-6092	KN-303
		YA-6092	KN-303C
XJR1200	1173	YA-1295	KN-401
XJR1300	1300	YA-1295	
XT225 Serow	225	YA-2292	KN-143
XV535 Virago	535		KN-145
XV750 Virago	747	YA-1186	KN-145
XV1100 Virago	1100	YA-1186	KN-145
XVS650 DragStar	650	YA-6598	KN-145
XVZ1300 Royal Star	1300	YA-1595	KN-303
		YA-1595	KN-303C
YFB250 Timberwolf	250	YA-2597	KN-143
YFM80 Badger	80	YA-8002	
YFM350	350		KN-142
YFM350FW Big Bear	346	YA-2597	KN-142
YFM350FX Wolverine	350	YA-4350	KN-142
YFM350X Warrior	350	YA-4350	KN-142
YFM400FW Kodiak	384	YA-2597	KN-142
YFS200 Blaster	200	YA-2088	
YFZ350 Banshee	350	YA-3502	
YZ80	80	YA-8096	
YZF600R	600	YA-6096	KN-303
		YA-6096	KN-303C
YZF750R	741	YA-7593	KN-303

*Indicates 2 filters required ♦ - Intake kit available - see page 80 Applications updated daily at knfilters.com

Vehicle	Engine Type	Air Filter	Oil Filter
1996 YAMAHA			
YZF750R	741	YA-7593	KN-303C
YZF1000R Thunderace	1000	YA-1089	KN-303
		YA-1089	KN-303C
1995 YAMAHA			
FZR600R	600		KN-303
			KN-303C
FZR600R	600 - Non-US	YA-6094	KN-303
FZR600R	600 - US	YA-6089	KN-303
FZR1000	990	YA-1089	KN-303
		YA-1089	KN-303C
SR400	400	YA-4092	KN-145
VMX1200 V-Max	1200	YA-1285	KN-146
XJ600 Seca II	581	YA-6092	KN-303
		YA-6092	KN-303C
XJR1200	1173	YA-1295	KN-401
XT225 Serow	225	YA-2292	KN-143
XT350	350		KN-143
XT600E	600	YA-6090	KN-145
XV250 Virago	250		KN-145
XV535 Virago	535		KN-145
XV750 Virago	747	YA-1186	KN-145
XV1100 Virago	1100	YA-1186	KN-145
YFB250 Timberwolf	250	YA-2597	KN-143
YFM350 Moto-4	346	YA-2597	KN-142
YFM350FW Big Bear	346	YA-2597	KN-142
YFM350FX Wolverine	350	YA-4350	KN-142
YFM350X Warrior	350	YA-4350	KN-142
YFM400FW Kodiak	384	YA-2597	KN-142
YFS200 Blaster	200	YA-2088	
YFZ350 Banshee	350	YA-3502	
YZF600R	600	YA-6094	KN-303
		YA-6094	KN-303C
YZF750R	741	YA-7593	KN-303
		YA-7593	KN-303C
1994 YAMAHA			
FZR600R	600		KN-303
			KN-303C
FZR600R	600 - Non-US	YA-6094	KN-303
FZR600R	600 - US	YA-6089	KN-303
FZR1000	990	YA-1089	KN-303
		YA-1089	KN-303C
VMX1200 V-Max	1200	YA-1285	KN-146
XJ600 Seca II	600	YA-6092	KN-303
		YA-6092	KN-303C
XT225 Serow	225	YA-2292	KN-143
XV535 Virago	535		KN-145
XV750 Virago	747	YA-1186	KN-145
XV1100 Virago	1100	YA-1186	KN-145
YFB250 Timberwolf	250	YA-2597	KN-143
YFM350FW Big Bear	346	YA-2597	KN-142
YFM350X Warrior	350	YA-4350	KN-142
YFM400 Big Bear	400		KN-142
YFM400FW Kodiak	384	YA-2597	KN-142
YFS200 Blaster	200	YA-2088	
YFZ350 Banshee	350	YA-3502	
YZ80	80	YA-8096	
YZF750R	741	YA-7593	KN-303
		YA-7593	KN-303C
1993 YAMAHA			
FJ1200 - Legend Car	1200		KN-401
FZR600	600	YA-6089	KN-303
1993 YAMAHA			
FZR600	600	YA-6089	KN-303C
FZR600R	600	YA-6089	KN-303
		YA-6089	KN-303C
FZR1000	990	YA-1089	KN-303
		YA-1089	KN-303C
GTS1000	990		KN-303
			KN-303C
TDM850	850	YA-7585	KN-145
VMX1200 V-Max	1200	YA-1285	KN-146
XJ600 Diversion	600	YA-6092	KN-303
		YA-6092	KN-303C
XJ600 Seca II	600	YA-6092	KN-303
		YA-6092	KN-303C
XT350	350		KN-143
XT600E	600	YA-6090	KN-145
XTZ750 Super Tenere	754	YA-0075*	KN-145
XV535 Virago	535		KN-145
XV750 Virago	747	YA-1186	KN-145
XV1100 Virago	1100	YA-1186	KN-145
YFB250 Timberwolf	250	YA-2597	KN-143
YFM350FW Big Bear	346	YA-2597	KN-142
YFM350X Warrior	350	YA-4350	KN-142
YFM400FW Kodiak	384	YA-2597	KN-142
YFS200 Blaster	200	YA-2088	
YFZ350 Banshee	350	YA-3502	
1992 YAMAHA			
FJ1200 - Legend Car	1200		KN-401
FZR400RR EXUP	400		KN-303
			KN-303C
FZR600	600	YA-6089	KN-303
		YA-6089	KN-303C
FZR600R	600	YA-6089	KN-303
		YA-6089	KN-303C
FZR1000	990	YA-1089	KN-303
		YA-1089	KN-303C
TDM850	850	YA-7585	KN-145
VMX1200 V-Max	1200	YA-1285	KN-146
XJ600	600	YA-1684	KN-144
		YA-1684	KN-303
		YA-1684	KN-303C
XJ600 Diversion	600	YA-6092	KN-303
		YA-6092	KN-303C
XJ600 Seca II	600	YA-6092	KN-303
		YA-6092	KN-303C
XT225 Serow	225	YA-2292	KN-143
XT600E	600	YA-6090	KN-145
XTZ750 Super Tenere	754	YA-0075*	KN-145
XV750 Virago	747	YA-1186	KN-145
XV1100 Virago	1100	YA-1186	KN-145
YFB250 Timberwolf	250	YA-2597	KN-143
YFM350 Moto-4	346	YA-2597	KN-142
YFM350FW Big Bear	346	YA-2597	KN-142
YFM350X Warrior	350	YA-4350	KN-142
YFS200 Blaster	200	YA-2088	
YFZ350 Banshee	350	YA-3502	
YZ250	250	YA-2506XD	
1991 YAMAHA			
FJ1200 - Legend Car	1200		KN-401
FZR600	600	YA-6089	KN-303
		YA-6089	KN-303C
FZR600R	600	YA-6089	KN-303

*Indicates 2 filters required ♦ - Intake kit available - see page 80 Applications updated daily at knfilters.com

Vehicle	Engine Type	Air Filter	Oil Filter
1991 YAMAHA			
FZR600R	600	YA-6089	KN-303C
FZR1000	990	YA-1089	KN-303
		YA-1089	KN-303C
TW200 Trailway	200		KN-143
VMX1200 V-Max	1200	YA-1285	KN-146
XT350	350		KN-143
XT600E	600	YA-6090	KN-145
XTZ750 Super Tenere	754	YA-0075*	KN-145
XV750 Virago	747	YA-1186	KN-145
YFM250 Moto-4	250	YA-2597	KN-143
YFM350FW Big Bear	346	YA-2597	KN-142
YFM350X Warrior	350	YA-4350	KN-142
YFS200 Blaster	200	YA-2088	
YFZ350 Banshee	350	YA-3502	
YZ250	250	YA-2506XD	
1990 YAMAHA			
FJ1200 - Legend Car	1200		KN-401
FZR400RR EXUP	400		KN-303
			KN-303C
FZR600	600	YA-6089	KN-144
FZR600R	600	YA-6089	KN-144
FZR1000	990	YA-1089	KN-401
TW200 Trailway	200		KN-143
VMX1200 V-Max	1200	YA-1285	KN-146
XT600E	600	YA-6090	KN-145
XTZ750 Super Tenere	754	YA-0075*	KN-145
XV250	250		KN-145
XV250 Route 66	250		KN-145
XV750 Virago	747	YA-1186	KN-145
XV1100 Virago	1100	YA-1186	KN-145
XVZ1300 Venture Royale	1300	YA-1283	KN-146
YFM250 Moto-4	195	YA-2597	KN-143
YFM350 Moto-4	346	YA-2597	KN-142
YFM350FW Big Bear	346	YA-2597	KN-142
YFM350X Warrior	350	YA-4350	KN-142
YFS200 Blaster	200	YA-2088	
YFZ350 Banshee	350	YA-3502	
YX600 Radian	592	YA-1600	KN-144
1989 YAMAHA			
FJ1200	1200	YA-1184	KN-401
FJ1200 - Legend Car	1200		KN-401
FZR400	400	YA-4085	KN-144
FZR600	600	YA-6089	KN-144
FZR1000	1000	YA-1089	KN-401
TT600	600	YA-6003	KN-145
TW200 Trailway	200		KN-143
VMX1200 V-Max	1200	YA-1285	KN-146
XT350	350		KN-143
XT600	600	YA-6084	KN-145
XT600Z Tenere	600		KN-145
XTZ750 Super Tenere	754	YA-0075*	KN-145
XV250 Route 66	250		KN-145
XV750 Virago	750	YA-1186	KN-145
XV1100 Virago	1100	YA-1186	KN-145
XVZ1300 Venture Royale	1300	YA-1283	KN-146
YFA125 Breeze	125	YA-2088	
YFM225 Moto-4	225		KN-143
YFM250 Moto-4	250	YA-2597	KN-143
YFM350 Moto-4	350	YA-2597	KN-142
1989 YAMAHA			
YFM350FW Big Bear	350	YA-2597	KN-142
YFM350X Warrior	350	YA-4350	KN-142
YFS200 Blaster	200	YA-2088	
YFZ350 Banshee	350	YA-3502	
YX600 Radian	600	YA-1600	KN-144
1988 YAMAHA			
FJ1200 - Legend Car	1200		KN-401
FZ600	600	YA-1686	KN-144
FZ750	750	YA-7585	KN-401
FZ750 Genesis	750		KN-401
FZR400	400	YA-4085	KN-144
FZR1000	1000	YA-7585	KN-401
PW80	80	YA-8083	
VMX1200 V-Max	1200	YA-1285	KN-146
XT350	350		KN-143
XV250 Route 66	250		KN-145
XV750 Virago	750	YA-1186	KN-145
XV1100 Virago	1100	YA-1186	KN-145
XVZ1300 Venture Royale	1300	YA-1283	KN-146
YFM80 Badger	80	YA-8002	
YFM225 Moto-4	225		KN-143
YFM350 Moto-4	350	YA-2597	KN-142
YFM350FW Big Bear	350	YA-2597	KN-142
YFM350X Warrior	350	YA-4350	KN-142
YFP350 Terrapro	350	YA-2597	KN-142
YFS200 Blaster	200	YA-2088	
YFZ350 Banshee	350	YA-3502	
1987 YAMAHA			
BW200	196		KN-143
BW350 Big Wheel	350		KN-145
FJ1200	1200	YA-1184	KN-401
FJ1200 - Legend Car	1200		KN-401
FZ600	600	YA-1686	KN-144
FZ700 Genesis	700	YA-7585	KN-144
FZR750R	750	YA-7585	KN-401
FZR1000	1000	YA-7585	KN-401
FZX700 Fazer	700	YA-7086	KN-401
TT350	350	YA-3586	KN-143
TW200 Trailway	200		KN-143
XC200Z Riva	200		KN-145
XT350	350		KN-143
XT600	600	YA-6084	KN-145
XV535 Virago	535		KN-145
XV700 Virago	700	YA-1186	KN-145
XV1100 Virago	1100	YA-1186	KN-145
XVZ1300 Venture Royale	1300	YA-1283	KN-146
YFM80 Badger	80	YA-8002	
YFM200 Moto-4	200		KN-143
YFM225 Moto-4	225		KN-143
YFM350 Moto-4	350	YA-2597	KN-142
YFM350FW Big Bear	350	YA-2597	KN-142
YFM350X Warrior	350	YA-4350	KN-142
YFZ350 Banshee	350	YA-3502	
YX600 Radian	600	YA-1600	KN-144
1986 YAMAHA			
FJ1200	1200	YA-1184	KN-401
FJ1200 - Legend Car	1200		KN-401
FZ600	600	YA-1686	KN-144
FZ750	750	YA-7585	KN-401
FZX700 Fazer	700	YA-7086	KN-401
FZX750 Fazer	750		KN-401

*Indicates 2 filters required ♦ - Intake kit available - see page 80 Applications updated daily at knfilters.com

Vehicle	Engine Type	Air Filter	Oil Filter
1986 YAMAHA			
SRX600	600	YA-6050	KN-145
TT350	350	YA-3586	KN-143
VMX1200 V-Max	1200	YA-1285	KN-146
XJ700 Maxim	700	YA-7080	KN-144
XJ700X Maxim X	700	YA-7080	KN-144
XJ750X Maxim X	750	YA-7080	KN-144
XT125	125		KN-143
XT350	350		KN-143
XT600	600	YA-6084	KN-145
XT600 Tenere	600		KN-145
XV700 Virago	700	YA-1186	KN-145
XV1100 Virago	1100	YA-1186	KN-145
XVZ1300 Venture Royale	1300	YA-1283	KN-146
YFM200 Moto-4	200		KN-143
YFM225 Moto-4	225		KN-143
YFM350FW Big Bear	350	YA-2597	KN-142
YTM225 Tri-Moto	225		KN-143
YTZ250 Tri-Z	250	YA-3250	
YX600 Radian	600	YA-1600	KN-144
1985 YAMAHA			
BW200	196		KN-143
FJ1100	1100	YA-1184	KN-401
FZ750	750	YA-7585	KN-401
VMX1200 V-Max	1200	YA-1285	KN-146
XJ700 Maxim	700	YA-7080	KN-144
XJ700X Maxim X	700	YA-7080	KN-144
XJ750X Maxim X	750	YA-7080	KN-144
XT350	350		KN-143
XT600	600	YA-6084	KN-145
XT600 Tenere	600		KN-145
XV700 Virago	700	YA-1186	KN-145
XV920 Virago	920	YA-1550	KN-145
XV1000 Virago	1000	YA-1186	KN-145
XVZ1200 Venture Royale	1200	YA-1283	KN-146
YFM80 Badger	80	YA-8002	
YFM200 Moto-4	200		KN-143
YTM200 Tri-Moto	200		KN-143
YTM225 Tri-Moto	225		KN-143
YTZ250 Tri-Moto	250	YA-3250	
YTZ250 Tri-Z	250	YA-3250	
1984 YAMAHA			
FJ600	600	YA-1684	KN-144
FJ1100	1100	YA-1184	KN-401
TT600	600	YA-6003	KN-145
XJ750	750		KN-144
XT250	250		KN-143
XT600	600	YA-6084	KN-145
XT600 Tenere	600		KN-145
XV700 Virago	700	YA-1186	KN-145
XV920 Virago	920	YA-1550	KN-145
XV1000 Virago	1000	YA-1186	KN-145
XVZ1200 Venture Royale	1200	YA-1283	KN-146
YTM200 Tri-Moto	200		KN-143
YTM225 Tri-Moto	225		KN-143
1983 YAMAHA			
SR500	500		KN-145
TT600	600	YA-6003	KN-145
XC180	180		KN-145
XJ550 Maxim	550	YA-1600	KN-144
XJ650 Maxim	650	YA-1650	KN-144
1983 YAMAHA			
XJ650 Seca Turbo	650		KN-144
XJ750	750		KN-144
XJ750 Maxim	750	YA-1650	KN-144
XJ750M Midnight Maxim	750	YA-1650	KN-144
XJ750R Seca	750	YA-1650	KN-144
XJ900R Seca	900	YA-9083	KN-144
XJ900RK Seca	900	YA-9083	KN-144
XS400	400		KN-144
XS650 Heritage	650	YA-1892	
XS1100	1100	YA-1400	KN-146
XT200	200		KN-143
XT550	550	YA-1874	KN-145
XV500 Virago	500		KN-145
XV750 Virago	750	YA-1550	KN-145
XV750M Midnight Virago	750	YA-1550	KN-145
XV920 Virago	920	YA-1550	KN-145
XV920M Midnight Virago	920	YA-1550	KN-145
XVZ1200 Venture Royale	1200	YA-1283	KN-146
XZ550 Vision	550		KN-145
YTM200 Tri-Moto	200		KN-143
YTM225 Tri-Moto	225		KN-143
1982 YAMAHA			
SR500	500		KN-145
XJ400	400	YA-1600	KN-144
XJ550 Maxim	550	YA-1600	KN-144
XJ550 Seca	550	YA-1600	KN-144
XJ650 Maxim	650	YA-1650	KN-144
XJ650 Seca	650	YA-1650	KN-144
XJ650 Seca Turbo	650		KN-144
XJ750	750		KN-144
XJ750 Maxim	750	YA-1650	KN-144
XJ750R Seca	750	YA-1650	KN-144
XJ1100 Maxim	1100		KN-146
XS400	400		KN-144
XS650 Heritage	650	YA-1892	
XS1100	1100	YA-1400	KN-146
XT200	200		KN-143
XT250	250		KN-145
XT550	550	YA-1874	KN-145
XV750 Virago	750	YA-1550	KN-145
XV920 Virago	920	YA-1550	KN-145
XZ550 Vision	550		KN-145
YZ80	80	R-1390	
1981 YAMAHA			
MX175	175	YA-1078	
SR185	185		KN-143
SR250SE	250		KN-145
SR500	500	YA-1050	KN-145
TT250	250		KN-145
TT500	500	YA-1100	KN-145
XJ550 Maxim	550	YA-1600	KN-144
XJ550 Seca	550	YA-1600	KN-144
XJ650 Maxim	650	YA-1650	KN-144
XJ650 Midnight Special	650	YA-1650	KN-144
XJ750	750		KN-144
XJ750R Seca	750	YA-1650	KN-144
XS250	250		KN-144
XS400	400		KN-144
XS650	650	YA-1892	

*Indicates 2 filters required ♦ - Intake kit available - see page 80 Applications updated daily at knfilters.com

Vehicle	Engine Type	Air Filter	Oil Filter
1981 YAMAHA			
XS850	850	YA-1300	KN-146
XS850L	850	YA-1300	KN-146
XS850S	850	YA-1300	KN-146
XS1100	1100	YA-1400	KN-146
XT250	250		KN-145
XT500	500		KN-145
XV750 Virago	750	YA-1550	KN-145
XV920 Virago	920	YA-1550	KN-145
YZ80	80	R-1390	
1980 YAMAHA			
MX175	175	YA-1078	
SR250SE	250		KN-145
SR500	500	YA-1050	KN-145
TT500	500	YA-1100	KN-145
XJ650 Maxim	650	YA-1650	KN-144
XS400	400		KN-144
XS650	650	YA-1892	
XS750	750		KN-146
XS850	850	YA-1300	KN-146
XS850L	850	YA-1300	KN-146
XS850S	850	YA-1300	KN-146
XS1100	1100	YA-1400	KN-146
XT250	250		KN-145
XT500	500		KN-145
1979 YAMAHA			
DT125	125	YA-1078	
DT175	175	YA-1078	
MX175	175	YA-1078	
SR500	500	YA-1050	KN-145
TT500	500	YA-1100	KN-145
XS400	400		KN-144
XS650	650	YA-1152	
XS750	750	YA-1300	KN-146
XS1100	1100	YA-1400	KN-146
XT500	500		KN-145
1978 YAMAHA			
DT125	125	YA-1078	
DT175	175	YA-1078	
SR500	500	YA-1050	KN-145
TT500	500	YA-1100	KN-145
XS400	400		KN-144
XS650	650	YA-1152	
XS750	750	YA-1300	KN-146
XS1100	1100	YA-1400	KN-146
XT500	500		KN-145
1977 YAMAHA			
DT250	250 - 77.5 yr. model only	YA-4074	
DT400	400 - 77.5 yr. model only	YA-4074	
TT500	500	YA-1100	KN-145
XS400	400		KN-144
XS650	650	YA-1152	
XS750	750		KN-146
XT500	500		KN-145
1976 YAMAHA			
DT250	250	YA-4074	
DT400	400	YA-4074	
TT500	500	YA-1100	KN-145
XS650	650	YA-1152	
XT500	500		KN-145
1975 YAMAHA			
DT250	250	YA-4074	
DT400	400	YA-4074	
RD250	250	YA-0700	
RD350	350	YA-0700	
1974 YAMAHA			
DT250	250	YA-4074	
DT360	360	YA-4074	
RD250	250	YA-0700	
RD350	350	YA-0700	
1973 YAMAHA			
RD250	250	YA-0700	
RD350	350	YA-0700	
1972 YAMAHA			
R5	350	YA-0700	
1971 YAMAHA			
R5	350	YA-0700	
1970 YAMAHA			
R5	350	YA-0700	
1988 YUGO			
GV	1.1L L4 CARB	E-2570	HP-1002
GVL	1.1L L4 CARB	E-2570	HP-1002
GVS	1.1L L4 CARB	E-2570	HP-1002

*Indicates 2 filters required ♦ - Intake kit available - see page 80 Applications updated daily at knfilters.com

K&N Million Mile Limited Warranty®

K&N O/E Replacement Air Filters and Air Intake Systems purchased from Authorized Dealers are backed by a Million Mile Limited Warranty when used primarily on paved roads and on vehicles for which they were designed. If one of these products ever fails to provide complete satisfaction, K&N will replace it.

What Is Not Covered By Our Warranty

Any K&N product used for 1: any type of racing or competition; 2: any off-road use, custom or modified applications; 3: any off-road or dual sport motorcycle/ ATV use; or 4: any illegal highway use, marine, or industrial applications. All K&N Air Filters not covered by our million mile warranty are warranted against defective materials or workmanship for one year from date of purchase with no mileage limitation. This includes K&N Air Filters sold for ATV's and off-highway or dual-purpose motorcycles.

Incorrect Cleaning or Use Voids Warranty

K&N Air Filters should be cleaned every 50,000 miles for normal highway use, more often in dusty conditions. Cleaning should be done with K&N cleaner and air filter oil (or comparable air filter cleaner and oil). Use of compressed air, or chemicals not specifically designed to clean and re-oil cotton air filters (i.e. gasoline, transmission fluid, motor oil, lightweight oil, or diesel fuel) will void the warranty. Any damaged, abused or modified K&N Air Filters will not be warranted.

Replacement

Any K&N product returned to K&N will need a Return Goods Authorization number and must be sent at customers' expense along with proof of purchase. Call 1-800-858-3333 or contact K&N by email or mail.

Product Registration

Register your warranty at our web site and you'll be eligible for special promotions and product upgrade opportunities.

Extent of Warranty

Any defective K&N Air Filter properly returned to K&N will be replaced. K&N reserves the right to determine whether the terms of the warranty, set out above, have been properly complied with. In the event that the terms are not complied with, K&N shall be under no obligation to honor this warranty. K&N will not be responsible for any indirect, consequential, special, contingent, or other damages.

Commercial Grade Diesel Air Filter Warranty

K&N commercial grade air filters have a 3 years or 300,000 mile limited warranty. One K&N can replace more than 10 disposable air filters.

K&N Oil Filter Warranty

K&N oil filters are warranted to be free from defects in material and workmanship. Any filter proven defective during the engine or equipment manufacturer's recommended service intervals will be replaced at no charge.

In the event of an engine or equipment failure directly caused by a defective K&N oil filter, which was properly installed and changed following the engine or equipment manufacturer's recommended service intervals, K&N Engineering, Inc. will repair the damaged engine or equipment.

Claims for engine or equipment repairs provided under this warranty must be submitted within 30 days after discovery of damage. K&N Engineering, Inc. reserves the right to examine the engine or equipment and filter to determine the amount of damage and whether it was caused by a defective K&N oil filter.

This warranty gives you specific legal rights. You may have other rights which vary from state to state.

Engine and equipment manufacturer's warranties remain in effect when K&N oil filters are used.

Emissions Standards and Smog Test Requirements

K&N offers more 50-state street legal automotive intake systems than any other company. Check the status of the part number for your vehicle in this catalog or on our website and check whether it has a CARB E.O. CARB stands for California Air Resources Board. An intake system for a vehicle that does not have a CARB E.O. is still street legal in most states. CARB E.O. status impacts California and a few other states that have similar emission control standards. So if you don't live in California or other states that adopt California vehicle emission standards, read no further.

In order for an intake system to be legal in California and states with emission standards, the part must receive an exemption in the form of an E.O. number from CARB which is only valid for a specific vehicle and the E.O. must be in or attached to the vehicle. That means a part number can be CARB exempt for some vehicle applications and not others. There is no such thing as "CARB pending". A particular part number on a particular vehicle is either exempt or not. An intake system that does not have a CARB E.O. is not legal for highway use in California and a few other states and will not pass a state regulated emissions test solely due to the absence of an E.O. number. If you still have questions about the legality of a K&N part number on your vehicle, please visit our website or contact customer service at 1-800-858-3333. You can also determine whether CARB exemption is required for a part on your vehicle to be legal in your state by checking with your local or state motor vehicle or emissions agency.

Consumer Protection Pledge

We want to make sure that when you buy a K&N Lifetime Air Filter or Air Intake System, you can be confident your vehicle's warranty will not be impacted. We also want you to feel confident that even if you experience difficulties with a dealership repair department, we will step-in and resolve the issue, so you won't have to. Therefore, we make the following Pledge:

K&N pledges to our customers that they will not be taken advantage of and charged for a repair due to a manufacturer warranty denial blamed on the presence of a K&N product.

A member of K&N's fully staffed customer service department

Horespower Guarantee

Applicable only for air intake systems purchased and installed in the U.S.A.

K&N Air Intake Systems are Guaranteed to Increase Power!

Every K&N air intake system we design has been tested on a chassis dynamometer to establish that it will provide an increase in horsepower to the drive wheels of the vehicle.* We publish estimated horsepower increases to allow consumers an opportunity to view a real test result for a specific or similar vehicle even though the actual results a consumer will receive will vary depending on such things as the condition of the vehicle, weather, fuel, and other circumstances.

Our horsepower guarantee is simple and straightforward. If you are the original retail purchaser of a K&N intake system, we offer an unconditional 30 day money back guarantee. If you are unhappy with a K&N intake system for any reason, including the horsepower improvement experienced, we will refund 100% of the purchase price and even pay for return shipping to K&N.

If you are not completely satisfied and wish to return your intake, simply call our customer support team in Riverside, California at 800-858-3333 within 30 days of the original purchase. Provide your name, address, contact information, and original purchase price. We will issue a return authorization number to you. We can also send you a shipping label to get the intake returned at no cost to you. Then use the shipping label to return the complete air intake system (including all parts and components) in an undamaged condition (exclusive of ordinary wear and tear and markings from installation) in the original packaging, together with the original proof of purchase, clearly showing the date of purchase and amount paid. Make sure that the shipping label clearly indicates the return authorization number. A check for the refund will be sent, within 30 days of receipt, to the name and address provided.

GUARANTEED TO INCREASE HORSEPOWER

This guarantee does not apply to any other costs incurred by the original purchaser, including, but not limited to, dynamometer testing, parts and labor for the installation or removal of the air intake system, loss of use, or other incidental costs.

* Please note that the horsepower rating that a motor vehicle manufacturer advertises is usually measured at the crankshaft of the engine using an engine dynamometer. There is generally a parasitic loss of horsepower between the crankshaft and drive wheels, which is caused by the drivetrain of the vehicle. This means we will often show absolute horsepower numbers that are lower than the vehicle manufacturer since we are measuring the horsepower that reaches the road.

Engine Protection Limited Warranty

Unlike many companies, our warranty for O/E replacement air filters and intake systems does extend beyond the replacement of a defective K&N part. For the original purchaser of the product, our warranty covers any engine damage or related costs incurred as a direct result of the use of a properly installed and maintained K&N O/E replacement air filter, excluding commercial grade heavy duty diesel air filters, or intake system on the specific vehicle for which the product was designed to be used by K&N. This includes reasonable vehicle repair costs, sensor replacements, car rental fees or other incidental expenses directly related to an engine problem caused by the failure of a K&N product. Furthermore, we warrant that using our product will not result in a vehicle warranty denial. K&N will not be responsible for any indirect, consequential, special, contingent, or other damages not listed above.

We will promptly reimburse the consumer for the cost of the repair if a service provider denies warranty coverage as a result of a K&N product or claims that a K&N product has caused harm to your engine or vehicle. In order to receive reimbursement, we require each of the following:

1. The consumer must provide a written statement or repair order from the dealership or service provider in which the dealership or service provider blames the problem or warranty denial on a K&N product;
2. The service provider or consumer must provide K&N with all allegedly damaged parts. Many states have laws that require a service provider to retain all parts replaced during a vehicle repair, unless given consent to dispose of the parts by the consumer. K&N will pay the shipping cost to recover these parts; and
3. The consumer must provide proof of purchase of the K&N product along with cooperation in helping us investigate the claim.

Once these steps have been completed, K&N will contact the service provider and collect evidence to support their claim. In the event we are not provided with sufficient evidence, we reserve the right to reject the claim and will use our best efforts to assist in establishing your rights toward the service provider under warranty or other provisions.

We strive to exceed consumer expectations. Customer service can be reached at 1-800-858-3333.

Testing Facilities and Methods

K&N maintains testing facilities in the USA, the UK and the Netherlands. These facilities incorporate both airflow and horsepower/torque testing capabilities. Our horsepower/torque testing is performed on wheel-based dynamometers, which measure SAE corrected brake horsepower and torque at the wheel(s) receiving power from the drive train. This is different and we believe more realistic than horsepower/torque testing done at the flywheel of an engine because the power lost between the engine and the wheels does not contribute to the power needed to put a vehicle in motion. Our standard SAE corrected horsepower/torque testing is designed to measure relative power differences on a vehicle with and without K&N products installed. We attempt to hold all other variables constant to generate a reliable measurement of changes in SAE corrected horsepower and torque on a vehicle before and after a K&N product is installed.

Airflow testing is a little more complicated, so we have included a detailed description of our airflow testing on our website. See knfilters.com for more information.

To test the Dust filtration efficiency for a particular air filter, we contract with an independent lab to conduct such tests in accordance with the ISO 5011 testing procedure.

K&N Estimated Horsepower Gains

K&N provides estimated SAE corrected horsepower gains that are based on actual dynamometer testing for a specific or similar vehicle. The actual horsepower increase a consumer will receive will vary depending on such things as vehicle condition, fuel, weather and other circumstances. It would be impractical to test every possible vehicle configuration or year in which a particular engine may be used; therefore, many of our estimates are based upon similar engine/vehicle/year dynamometer testing that we believe to be representational for the vehicle listed.

K&N Dynamometer Test Results

K&N utilizes an inertial dynamometer (dyno) to determine the estimated SAE corrected horsepower of our intakes kits and OE replacement air filters. This type of dyno does not actually measure horsepower, but rather measures acceleration. This measured acceleration is then multiplied by the mass of the drum (a constant mass) to obtain the force being applied to the drum, or in other words, the interface between the vehicle's tires and the dyno drum. Now that the force at this point is known, determining the torque is straightforward. The torque is calculated by multiplying the calculated force by the radius (again a constant) of the dyno's drum.

Now, torque is very simply and mathematically related to horsepower by the following equation:

Horsepower = Torque x RPM /5252

From this equation, the SAE corrected horsepower can be determined.

According to the above explanation, the only variable being measured by the dyno is the acceleration of the drum. There are no adjustments (calibration) to be made by K&N on either the two-wheel or four-wheel drive dyno. The mass of the drum(s) is determined at the factory before shipping the dynamometers to K&N and the mass of the drum(s) are imbedded into the software. K&N does not have the ability to modify or adjust these values.

Furthermore, there are several factors that can affect the SAE corrected horsepower values as measured by K&N or at any other dyno facility. Some of these factors are:

- Consistency of test parameters
- Tire pressure
- Fuel octane rating
- Vehicle condition
- The atmospheric conditions (dyno correction factors can vary from engine electronic correction factors)

K&N has noticed that SAE corrected horsepower values will vary from day-to-day, while testing the same vehicle, due to the manner in which the vehicle's on-board computer adjusts for varying climate conditions. In other words, if a vehicle is tested at sea level on a sunny and warm day, the dyno will apply a SAE correction factor to adjust the conditions to a standard temperature and pressure (STP) and the vehicle's on-board computer will also apply certain set of operating parameters. If that same vehicle is tested at a high altitude, on a rainy and cold day, the dyno will again adjust to STP while the vehicle may adjust to a different correction factor than it did on the sea level test. Furthermore, some vehicles have required almost a 100 miles be logged on the vehicle in order to allow the on-board computer to reset itself to obtain accurate power readings.

While K&N pays close attention to these many factors, and is patient while performing dyno tests, we are not in the position to scrutinize the many facilities that perform dynamometer testing for the general public. Furthermore, we certainly do not have enough information to make a judgment on the validity of these tests.

K&N Air Filter Cleaning Instructions

Most K&N Air Filters will normally require cleaning every 50,000 miles. Servicing your K&N oiled cotton air filter is simple; just follow the four easy steps below.

Step 1: Apply Cleaner

Liberally spray K&N Air Filter Cleaner or K&N Power Kleen™ onto both sides of filter and allow to soak for 10 minutes to loosen the dirt. Do not allow cleaner to dry on air filter.

Step 2: Rinse Filter

Rinse off air filter with cool low-pressure water from the clean side out in order to flush the dirt out of the filter. Continue to rinse the filter until all traces of cleaner are gone. It may be necessary to repeat steps 1 and 2.

Step 3: Dry Filter

After rinsing, gently shake off excess water and **allow filter to dry naturally**. Do not oil until the filter is dry.

Step 4: Oil Filter

Squeeze Oil (99-5050): Apply K&N Air Filter Oil evenly along the crown of each filter pleat. Allow oil to wick for approximately 20 minutes. Touch up any light areas on either side of the filter until there is a uniform red color on all areas.

Aerosol Oil (99-5000): Spray K&N Air Filter Oil evenly along the crown of each filter pleat holding nozzle about 3" away. Allow oil to wick for approximately 20 minutes. Touch up any light areas on either side of the filter until there is a uniform red color on all areas.

The above process is the only approved procedure for maintaining your K&N oiled cotton air filter.
Visit knfilters.com for additional information on cleaning and re-oiling your filter and examples of a dirty filter needing to be serviced.

Recharger® Filter Care Service Kit

Aerosol

Designed to clean any K&N Air Filter. It restores airflow efficiency so your air filter performs virtually like new! Includes 6 1/2 oz. spray oil and 12 oz. filter cleaner. **Part# 99-5000**

Squeeze Oil

Same as 99-5000 except has squeeze oil bottle instead of spray can. Includes 8 oz. squeeze oil and 12 oz. filter cleaner. **Part# 99-5050**

99-5000

99-5050

99-0621

Power Kleen™

K&N Power Kleen™ is a high-performance cleaner and degreaser used to remove road grime, engine exhaust and grease from cotton air filters. It is now formulated to clean those troublesome and demanding cleaning jobs. This cleaner is specially formulated to remove oil, lubricants, grease, grime, and other deposits from most surfaces including cotton air filters, painted surfaces, chrome, plastic and more!

K&N Power Kleen™ is the only brand of cleaner recommended to clean K&N Air Filter elements. It works to dissolve dirt buildup and old filter oil and can be washed away with water. This cleaner and degreaser is environmentally friendly and safe on paint, chrome, cast aluminum, plastic, rubber and vinyl when used as directed. It is available in four convenient sizes and includes complete instructions on each bottle.

Note: Do not use on polished or anodized aluminum.

DESCRIPTION	PART#
12 fl. oz. Spray Bottle	99-0606
32 fl. oz. Spray Bottle	99-0621
1 gal. Bottle	99-0635
5 gal. Pail	99-0640

99-0606

99-11312

K&N Air Filter Oil

K&N Air Filter Oil is the only oil specially formulated to work in combination with the cotton fabric in K&N Air Filter elements providing outstanding air filtration. When used as directed, it quickly penetrates the filter pleats, where it remains suspended in the cotton fabric until the element is cleaned with K&N Air Filter Cleaner.

99-0504 99-0533

DESCRIPTION	PART#
6 1/2 oz. Aerosol Can	99-0504
12 oz. Aerosol Can	99-0516
8 oz. Squeeze Bottle	99-0533
1/2 oz. Pillow Pack	99-11312
1 gal. Refill Bottle	99-0551
5 gal. Pail	99-0555

Heavy Duty Air Filter Cleaner

Specially formulated cleaner to be used on K&N Heavy Duty Commercial Grade air filters. Comes in a one gallon bottle with a 38-inch hose and spray nozzle.

Part# 99-0638

99-0638

SYNTHETIC AIR FILTER CLEANER

Perfect for K&N Hybrid air filters, Dryflow™ air filters and other synthetic air filters. 32 fl. oz spray bottle. **Part# 99-0624**

K&N Sealing Grease

K&N Air Filter Sealing Grease provides an air tight fit around sealing surfaces on all types of air filter elements. It resists heat and will not melt or run off.

99-0703-1

Note: K&N Air Filter Sealing Grease is not to be used on clamp-on filter elements.

DESCRIPTION	PART#
1 oz. Squeeze Tube	99-0703-1
6 oz. Squeeze Tube	99-0704

HIGH-FLOW AIR FILTERS AIR INTAKE SYSTEMS PERFORMANCE OIL FILTERS

2013 PRODUCT CATALOG

K&N ENGINEERING, INC.
KNFILTERS.COM
1-800-858-3333

1455 CITRUS ST. RIVERSIDE, CA 92507
P.O. BOX 1329, RIVERSIDE, CA 92502

0 24844 33077 2

©2013 K&N Engineering, Inc.

89-11482-13